STATE OF HAWAII
DEPARTMENT OF HAWAIIAN HOME LANDS
PŪLEHUNUI, MAUI, HAWAII

PŪLEHUNUI WASTEWATER SYSTEM

TAX MAP KEY: (2) 3-8-008: 001 (DLNR), 008, 034, 035 AND 038 (DHHL)

LOCATION MAP

NORTH

NOT TO SCALE

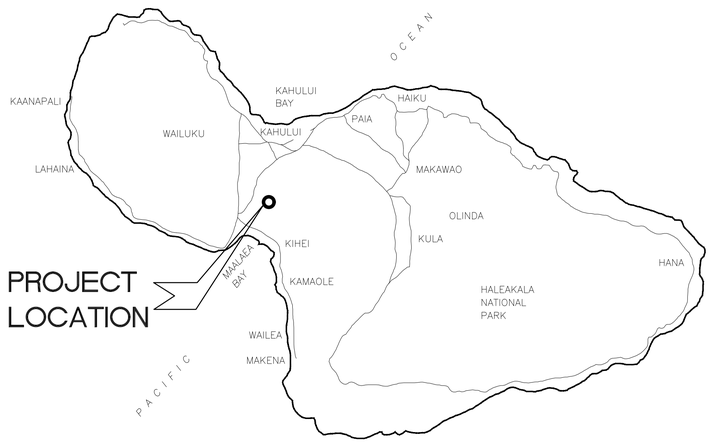

ISLAND OF MAUI

VICINITY MAP

NORTH

NOT TO SCALE

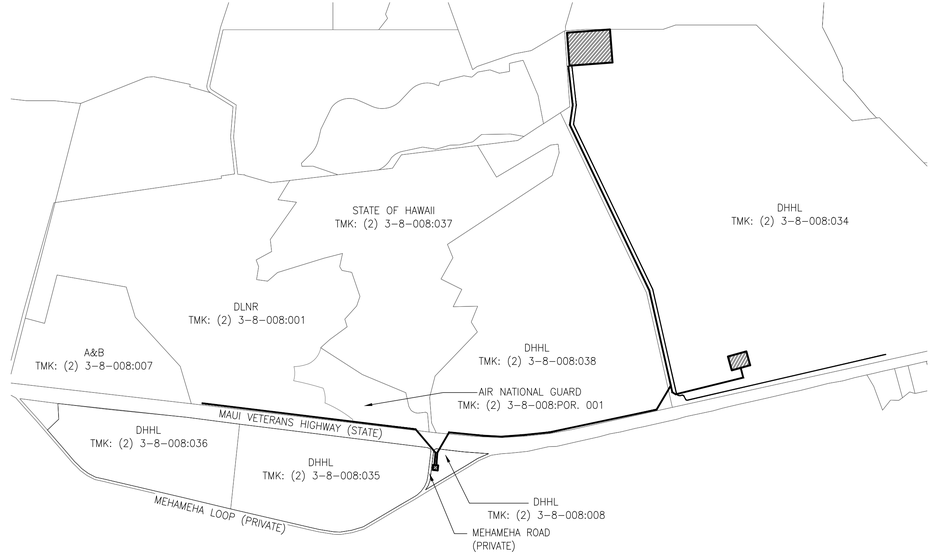

APPROVED

CHIEF, ENVIRONMENTAL MANAGEMENT DIVISION — DATE
DEPARTMENT OF HEALTH, STATE OF HAWAII

DIRECTOR, DEPARTMENT OF WATER SUPPLY — DATE
COUNTY OF MAUI

DIRECTOR, DEPARTMENT OF PUBLIC WORKS — DATE
COUNTY OF MAUI

ADMINISTRATOR, HIGHWAYS DIVISION — DATE
STATE DEPARTMENT OF TRANSPORTATION
(APPROVAL GRANTED FOR WORK WITHIN STATE RIGHT-OF-WAY ONLY)

CHAIRMAN, DEPARTMENT OF HAWAIIAN HOME LANDS — DATE
STATE OF HAWAII

DWG. NO. T-1

SHEET 1 OF 201

FILE	POCKET	FOLDER	NO.

JOB NO. 0-11-056.004
FN: Z:\2018\18-524 (16-576 PULEHUNUI NORTH SEWER_PHASE 6.3 WASTEWATER TREATMENT FACILITY) BRYAN\DWG\T-1 - TITLE SHEET.DWG

GENERAL DRAWINGS

1	T-1	TITLE SHEET
2	T-2	INDEX OF DRAWINGS
3	G-1	CONSTRUCTION NOTES 1
4	G-2	CONSTRUCTION NOTES 2
5	G-3	ABBREVIATIONS AND SYMBOLS
6	G-4	OVERALL PROJECT PLAN

PHASE A1-DHHL NORTH PUMP STATION

7	CA1-1	PHASE A1 DHHL NORTH PUMP STATION OVERALL SITE PLAN
8	CA1-2	PHASE A1 EROSION CONTROL PLAN
9	CA1-3	PLAN AND PROFILE MEHAMEHA ROAD STA. 0+00 TO END
10	CA1-4	PLAN AND PROFILE DHHL-FM1 STA. 0+00 TO END
11	CA1-5	PLAN AND PROFILE DLNR SEWER STA. 0+00 TO END
12	CA1-6	DHHL NORTH PUMP STATION SITE PLAN
13	CA1-7	DHHL NORTH PUMP STATION GRADING PLAN
14	CA1-8	DHHL NORTH PUMP STATION SITE SECTIONS
15	MA1-1	DHHL NORTH PUMP STATION PLAN
16	MA1-2	DHHL NORTH PUMP STATION GRATING PLAN
17	MA1-3	DHHL NORTH PUMP STATION SECTION
18	MA1-4	DHHL NORTH PUMP STATION MECHANICAL SECTION

PHASE A2-DLNR GRAVITY SEWER

19	CA2-1	PHASE A2 SITE PLAN DLNR GRAVITY SEWER
20	CA2-2	PLAN AND PROFILE DLNR SEWER STA. 192+00 TO 202+00
21	CA2-3	PLAN AND PROFILE DLNR SEWER STA. 202+00 TO 212+00
22	CA2-4	PLAN AND PROFILE DLNR SEWER STA. 212+00 TO 222+00
23	CA2-5	PLAN AND PROFILE DLNR SEWER STA. 222+00 TO 232+00

PHASE A3-DHHL FORCEMAINS & WWTP ACCESS ROAD

24	CA3-1	PHASE A3 FORCEMAIN SITE PLAN-1
25	CA3-2	PHASE A3 FORCEMAIN SITE PLAN-2
26	CA3-3	PHASE A3 FORCEMAIN SITE PLAN-3
27	CA3-4	PLAN AND PROFILE FORCE MAIN STA. 232+00 TO 242+00
28	CA3-5	PLAN AND PROFILE FORCE MAIN STA. 242+00 TO 252+00
29	CA3-6	PLAN AND PROFILE FORCE MAIN STA. 252+00 TO 262+00
30	CA3-7	PLAN AND PROFILE FORCE MAIN STA. 262+00 TO 272+00
31	CA3-8	PLAN AND PROFILE FORCE MAIN-FM2 STA. 0+00 TO END
32	CA3-9	PLAN AND PROFILE WWTP ACCESS ROAD STA. 0+00 TO 7+00
33	CA3-10	PLAN AND PROFILE WWTP ACCESS ROAD STA. 7+00 TO 17+00
34	CA3-11	PLAN AND PROFILE WWTP ACCESS ROAD STA. 17+00 TO 27+00
35	CA3-12	PLAN AND PROFILE WWTP ACCESS ROAD STA. 27+00 TO 37+00
36	CA3-13	PLAN AND PROFILE WWTP ACCESS ROAD STA. 37+00 TO 47+00
37	CA3-14	PLAN AND PROFILE WWTP ACCESS ROAD STA. 47+00 TO 57+00
38	CA3-15	PLAN AND PROFILE WWTP ACCESS ROAD STA. 57+00 TO END
39	CA3-16	CURVE RETURN AND CUL-DE-SAC DETAILS
40	CA3-17	RETENTION BASIN P1 DETAIL
41	CA3-18	RETENTION BASIN P2 DETAIL
42	CA3-19	RETENTION BASIN P3 DETAIL
43	CA3-20	RETENTION BASIN P4 DETAIL
44	CA3-21	RETENTION BASIN P5 DETAIL
45	CA3-22	PHASE A3 EROSION CONTROL PLAN STA. 0+00 TO STA. 22+00
46	CA3-23	PHASE A3 EROSION CONTROL PLAN STA. 22+00 TO STA. 44+00
47	CA3-24	PHASE A3 EROSION CONTROL PLAN STA. 44+00 TO END

PHASE A4-DHHL SOUTH PUMP STATION

48	CA4-1	PHASE A4 DHHL SOUTH PUMP STATION OVERALL SITE PLAN
49	CA4-2	PHASE A4 EROSION CONTROL PLAN
50	CA4-3	DHHL SOUTH PUMP STATION SITE PLAN
51	CA4-4	DHHL SOUTH PUMP STATION GRADING PLAN
52	CA4-5	DHHL SOUTH PUMP STATION SITE SECTIONS
53	CA4-6	PLAN AND PROFILE 4" FORCE MAIN AND 8" SEWERLINE
54	MA4-1	DHHL SOUTH PUMP STATION PLAN AND SECTION
55	MA4-2	MECHANICAL DETAILS 1
56	MA4-3	MECHANICAL DETAILS 2

PHASE A5-DHHL WATERLINE

57	CA5-1	PHASE A5 DHHL WATERLINE SITE PLAN - 1
58	CA5-2	PHASE A5 DHHL WATERLINE SITE PLAN - 2
59	CA5-3	PHASE A5 DHHL WATERLINE SITE PLAN - 3
60	CA5-4	PLAN AND PROFILE DHHL WATERLINE STA. 0+00 TO 10+00
61	CA5-5	PLAN AND PROFILE DHHL WATERLINE STA. 10+00 TO 20+00
62	CA5-6	PLAN AND PROFILE DHHL WATERLINE STA. 20+00 TO 30+00
63	CA5-7	PLAN AND PROFILE DHHL WATERLINE STA. 30+00 TO 37+00
64	CA5-8	PLAN AND PROFILE DHHL WATERLINE STA. 37+00 TO 47+00
65	CA5-9	PLAN AND PROFILE DHHL WATERLINE STA. 47+00 TO 57+00
66	CA5-10	PLAN AND PROFILE DHHL WATERLINE STA. 57+00 TO 67+00
67	CA5-11	PLAN AND PROFILE DHHL WATERLINE STA. 67+00 TO 77+00
68	CA5-12	PLAN AND PROFILE DHHL WATERLINE STA. 77+00 TO 87+00
69	CA5-13	PLAN AND PROFILE DHHL WATERLINE STA. 87+00 TO END

PHASE B-REGIONAL WWTP

70	GB-1	LEGEND
71	GB-2	DESIGN DATA
72	GB-3	PROCESS FLOW DIAGRAM
73	CB-1	WWTP SITE PLAN
74	CB-2	WWTP EROSION CONTROL PLAN
75	CB-3	WWTP DRIVEWAY PLAN AND PROFILE
76	CB-4	WWTP OVERALL GRADING PLAN
77	CB-5	WWTP SITE GRADING PLAN
78	CB-6	WWTP SITE GEOMETRICS PLAN
79	CB-7	CURVE RETURN DETAILS
80	CB-8	WWTP CURB RAMP DETAILS
81	CB-9	WWTP PIPING KEY PLAN
82	CB-10	WWTP PIPING PLAN - 1
83	CB-11	WWTP PIPING PLAN - 2
84	CB-12	WWTP PIPING PLAN - 3
85	CB-13	WWTP PIPING PLAN - 4
86	CB-14	WWTP PIPING PROFILES - 1
87	CB-15	WWTP PIPING PROFILES - 2
88	CB-16	WWTP PIPING PROFILES - 3
89	CB-17	WWTP PIPING PROFILES - 4
90	CB-18	PLAN AND PROFILE 10" NCE LINE
91	MB-1	WWTP PROCESS GENERAL PLAN
92	MB-2	HEADWORKS PLAN
93	MB-3	HEADWORKS SECTIONS - 1
94	MB-4	HEADWORKS SECTIONS - 2
95	MB-5	AEROBIC DIGESTER PLAN
96	MB-6	BLOWER AND MCC SHED ELEVATIONS
97	MB-7	AEROBIC DIGESTER SECTIONS
98	MB-8	SLUDGE DEWATERING PLAN
99	MB-9	SLUDGE DEWATERING SECTIONS
100	MB-10	PLAN-UV DISINFECTION AND R-1 WATER RESERVOIR
101	MB-11	SECTIONS-UV DISINFECTION AND R-1 WATER RESERVOIR - 1
102	MB-12	SECTIONS-UV DISINFECTION AND R-1 WATER RESERVOIR - 2
103	MB-13	SECTIONS-UV DISINFECTION AND R-1 WATER RESERVOIR - 3
104	MB-14	ON-SITE PUMP STATION PLAN AND SECTION
105	MB-15	PACKAGE MBR PLAN AT TOP OF TANK
106	MB-16	PACKAGE MBR PLAN AT GRADE
107	MB-17	PACKAGE MBR SECTIONS - 1
108	MB-18	PACKAGE MBR SECTIONS - 2
109	MB-19	PACKAGE MBR GRATING PLAN
110	PB-1	P&ID HEADWORKS
111	PB-2	MBR (ON MBR SKIDS)
112	PB-3	MBR-PERMEATE PUMPS (ON MBR SKIDS)
113	PB-4	MBR-BLOWERS (ON MBR SKIDS)
114	PB-5	MBR-CIP SYSTEM (ON MBR SKIDS)
115	PB-6	MBR-WAS PUMPS (ON MBR SKIDS)
116	PB-7	AEROBIC DIGESTER
117	PB-8	SOLIDS DEWATERING
118	PB-9	UV DISINFECTION SYSTEM
119	PB-10	PLANT DRAIN PUMP STATION
120	PB-11	PLANT REUSE PUMPS

MISCELLANEOUS DETAILS

121	DC-1	MISCELLANEOUS CIVIL DETAILS - 1
122	DC-2	MISCELLANEOUS CIVIL DETAILS - 2
123	DC-3	MISCELLANEOUS CIVIL DETAILS - 3
124	DC-4	MISCELLANEOUS CIVIL DETAILS - 4
125	DM-1	MISCELLANEOUS MECHANICAL DETAILS - 1
126	DM-2	MISCELLANEOUS MECHANICAL DETAILS - 2
127	DM-3	MISCELLANEOUS MECHANICAL DETAILS - 3
128	DM-4	MISCELLANEOUS MECHANICAL DETAILS - 4
129	DM-5	MISCELLANEOUS MECHANICAL DETAILS - 5
130	DM-6	MISCELLANEOUS MECHANICAL DETAILS - 6

STRUCTURAL DRAWINGS

131	S-1	STRUCTURAL GENERAL NOTES
132	S-2	STRUCTURAL GENERAL NOTES
133	S-3	TYPICAL DETAILS - CONCRETE
134	S-4	TYPICAL DETAILS - CONCRETE
135	S-5	TYPICAL DETAILS - CMU
136	S-6	PIPE SUPPORT DETAILS
137	S-7	OVERALL PROJECT SITE PLAN
138	SA1-0	NORTH PUMP STATION SITE PLAN
139	SA1-1	NORTH PUMP STATION PLAN
140	SA1-2	NORTH PUMP STATION SECTION
141	SA4-0	SOUTH PUMP STATION SITE PLAN
142	SA4-1	SOUTH PUMP STATION PLAN AND SECTION
143	SB-0	WWTP SITE PLAN
144	SB-1	BLOWER AND MCC BUILDING FOUNDATION AND ROOF FRAMING PLANS
145	SB-2	BLOWER AND MCC BUILDING SECTION
146	SB-3	BLOWER AND MCC BUILDING SECTIONS AND DETAILS
147	SB-4	EQUALIZATION TANK & HEADWORKS FOUNDATION PLAN
148	SB-5	EQUALIZATION TANK ENLARGED PLAN AND FRP GRATING DETAILS
149	SB-6	HEADWORKS SECTION
150	SB-7	EQUALIZATION TANK SECTION
151	SB-8	HEADWORKS AND EQUALIZATION TANK SECTION
152	SB-9	UV DISINFECTION FOUNDATION AND ROOF FRAMING PLANS
153	SB-10	UV DISINFECTION SECTION
154	SB-11	SLUDGE DEWATERING FOUNDATION PLAN
155	SB-12	SLUDGE DEWATERING PLATFORM AND ROOF FRAMING PLANS
156	SB-13	SLUDGE DEWATERING SECTIONS
157	SB-14	SLUDGE DEWATERING SECTION
158	SB-15	DETAILS
159	SB-16	MBR TANK FOUNDATION PLAN
160	SB-17	MBR TANK CATWALK FRAMING PLAN
161	SB-18	MBR TANK CATWALK SECTION
162	SB-19	DETAILS

ARCHITECTURAL DRAWINGS

163	AB-1	BLOWER AND MCC ELEVATION SECTION
164	AB-2	AEROBIC DIGESTER ELEVATION AND SECTION
165	AB-3	SOLIDS DEWATERING ELEVATION AND SECTION
166	AB-4	DETAILS AND MATERIAL SCHEDULE

ELECTRICAL DRAWINGS

PHASE A1

167	EA1-1	NOTES AND DETAILS
168	EA1-2	ELECTRICAL SITE PLAN, SYMBOL LEGEND NOTES
169	EA1-3	NORTH PUMP ELECTRICAL PLAN
170	EA1-4	DETAILS
171	EA1-5	DETAILS
172	EA1-6	DETAILS
173	EA1-7	DETAILS
174	EA1-8	DETAILS

PHASE A3

175	EA3-1	NOTES AND DETAILS
176	EA3-2	OVERALL ELECTRICAL SITE PLAN, SYMBOL LEGEND, NOTES
177	EA3-3	PARTIAL ELECTRICAL SITE PLAN - 1
178	EA3-4	PARTIAL ELECTRICAL SITE PLAN - 2
179	EA3-5	PARTIAL ELECTRICAL SITE PLAN - 3
180	EA3-6	PARTIAL ELECTRICAL SITE PLAN - 4
181	EA3-7	PARTIAL ELECTRICAL SITE PLAN - 5

PHASE A4

182	EA4-1	NOTES AND DETAILS
183	EA4-2	ELECTRICAL SITE PLAN, SYMBOL LEGEND NOTES
184	EA4-3	SOUTH PUMP ELECTRICAL PLAN
185	EA4-4	DETAILS
186	EA4-5	DETAILS
187	EA4-6	DETAILS
188	EA4-7	DETAILS

PHASE B

189	EB-1	NOTES AND DETAILS
190	EB-2	WWTP OVERALL ELECTRICAL SITE PLAN
191	EB-3	DETAILS
192	EB-3.1	DETAILS
193	EB-3.2	DETAILS
194	EB-3.3	DETAILS
195	EB-4	MCC BUILDING
196	EB-5	WWTP PARTIAL ELECTRICAL PLAN 1
197	EB-6	WWTP PARTIAL ELECTRICAL PLAN 2
198	EB-7	WWTP PARTIAL ELECTRICAL PLAN 3
199	EB-8	WWTP PARTIAL ELECTRICAL PLAN 4
200	EB-9	WWTP PARTIAL ELECTRICAL PLAN 5
201	EB-10	DETAILS

AustinTsutsumi
& ASSOCIATES, INC.
CIVIL ENGINEERS I SURVEYORS
HONOLULU I WAILUKU I HILO, HAWAII

501 SUMNER STREET, SUITE 521
HONOLULU, HAWAII 96817

PHONE: 808-533-3646
FAX: 808-526-1267

STATE OF HAWAII
DEPARTMENT OF
HAWAIIAN HOME LANDS

PŪLEHUNUI
REGIONAL
INFRASTRUCTURE

AUSTIN, TSUTSUMI & ASSOC., INC.
ENGINEERS, SURVEYORS • HONOLULU, HAWAII

BRYAN H. KOBA
LICENSED PROFESSIONAL ENGINEER
No. 14948
HAWAII U.S.A.

This work was prepared by me or under my supervision and construction of this project will be under my observation. (Observation of construction as defined in Chapter 16-115 Subchapter 1 Definitions of the Hawaii Administrative Rules "Professional Engineers, Architects, Surveyors, and Landscape Architects.")

SIGNATURE APRIL 30, 2020
EXP. DATE OF THE LICENSE

0 1 2
LINE IS 2 INCHES AT FULL SIZE
(If NOT 2-inches : Scale Accordingly)

REVISION	DATE	BRIEF	BY

Project No:	16-576
Scale:	AS NOTED
Date:	1/31/2020
Designed By:	BHK
Drawn By:	BHK
Checked By:	

INDEX OF DRAWINGS

DWG. NO.

T-2

SHEET 2 OF 201

FILE	POCKET	FOLDER	NO.

JOB NO. 0-11-056.004
FN: C:\PROJECT FOLDER\16-576 DHHL PROJECT\ENGINEERING\DWG\CONSTRUCTION DRAWING SET\T-2 INDEX OF DRAWINGS.DWG

JOB NO. 0-11-056.004
FN: Z:\2018\18-524 (16-576 PULEHUNUI NORTH SEWER_PHASE 6.3 WASTEWATER TREATMENT FACILITY) BRYAN\DWG\G-1 CONSTRUCTION NOTES-1.DWG

GENERAL CONSTRUCTION NOTES

1. ALL CONSTRUCTION WORK SHALL BE DONE IN ACCORDANCE WITH THE "HAWAII STANDARD SPECIFICATIONS FOR ROAD AND BRIDGE CONSTRUCTION, 2005" AS AMENDED, AND THE "STANDARD DETAILS FOR PUBLIC WORKS CONSTRUCTION", DATED SEPTEMBER 1984, AS AMENDED, OF THE DEPARTMENT OF PUBLIC WORKS, CITY AND COUNTIES OF THE STATE OF HAWAII, THE "STATE OF HAWAII, DEPARTMENT OF TRANSPORTATION STANDARD PLANS" 2008, THE "MANUAL ON UNIFORM TRAFFIC CONTROL DEVICE FOR STREETS AND HIGHWAYS", 2009, AND THE CONSTRUCTION DRAWINGS, DETAILS, AND SPECIFICATIONS PREPARED FOR THIS PROJECT.

2. WHEREVER CROSSINGS OR CONNECTIONS OF NEW UTILITIES TO EXISTING UTILITIES ARE SHOWN ON THE PLANS, THE CONTRACTOR SHALL EXPOSE THE EXISTING LINES TO VERIFY THEIR LOCATIONS AND DEPTHS PRIOR TO EXCAVATION FOR THE NEW LINES. THE CONTRACTOR SHALL PROTECT EXISTING UTILITIES AND SHALL BE RESPONSIBLE FOR DAMAGES TO THE FACILITIES WHETHER SHOWN OR NOT ON THE PLANS.

3. NO CONSTRUCTION EQUIPMENT SHALL BE PARKED WITHIN THE ROAD RIGHT-OF-WAY IN SUCH A MANNER THAT THE EQUIPMENT WILL OBSTRUCT THE NORMAL MOVEMENT AND SIGHT DISTANCE OF THE DRIVING MOTORIST, EXCEPT DURING ACTUAL WORKING HOURS.

4. THE EXISTENCE AND LOCATION OF UNDERGROUND UTILITIES AND STRUCTURES AS SHOWN ON THE PLANS ARE FROM THE LATEST AVAILABLE DATA, BUT ARE NOT GUARANTEED AS TO THE ACCURACY OF THE ENCOUNTERING OF OTHER OBSTACLES DURING THE COURSE OF LOCATION OF UNCHARTED UTILITIES. THE CONTRACTOR SHALL BE RESPONSIBLE, AND SHALL PAY FOR ALL DAMAGES TO EXISTING UTILITIES.

5. EXCEPT DURING ACTUAL WORKING HOURS, ALL SIGNS WHICH DO NOT PERTAIN TO THE CONSTRUCTION ACTIVITY, SUCH AS "MEN WORKING" AND "FLAGMEN AHEAD" SHALL BE COVERED OR LAID DOWN. HOWEVER, ALL SIGNS NECESSARY FOR THE SAFETY OF THE PUBLIC SHALL BE MAINTAINED.

6. THE CONTRACTOR SHALL EMPLOY A HAWAII REGISTERED PROFESSIONAL LAND SURVEYOR TO PERFORM ALL CONSTRUCTION STAKEOUTS, THE COST OF WHICH SHALL BE BORNE BY THE CONTRACTOR.

7. THE CONTRACTOR SHALL MAKE HIS OWN ARRANGEMENTS FOR, AND PAY FOR ALL TEMPORARY UTILITIES REQUIRED FOR HIS WORK.

8. SHOULD HISTORIC SITES SUCH AS WALLS, PLATFORMS, PAVEMENTS AND MOUNDS, OR REMAINS SUCH AS ARTIFACTS, BURIALS, CONCENTRATION OF CHARCOAL OR SHELLS BE ENCOUNTERED DURING CONSTRUCTION WORK, WORK SHALL CEASE IN THE IMMEDIATE VICINITY OF THE FIND AND THE FIND SHALL BE PROTECTED FROM FURTHER DAMAGE. THE CONTRACTOR SHALL IMMEDIATELY CONTACT THE STATE HISTORIC PRESERVATION DIVISION ((808) 243-5169), WHICH WILL ASSESS THE SIGNIFICANCE OF THE FIND AND RECOMMEND AN APPROPRIATE MITIGATION MEASURE, IF NECESSARY. A MINIMUM 3-METER / 10-FOOT WIDE BUFFER ZONE EXISTS AROUND ALL SITES IN PRESERVATION DURING CONSTRUCTION. IT IS HIGHLY IMPORTANT THAT THE PRESERVED SITES REMAIN UNDISTURBED.

9. THE CONTRACTOR SHALL PROCURE AND PAY FOR ALL LICENSES AND PERMITS AND SHALL GIVE ALL NOTICES NECESSARY AND INCIDENTAL TO THE DUE AND LAWFUL PROSECUTION OF THE WORK.

10. THE CONTRACTOR SHALL RESTORE ALL EXISTING FACILITIES INCLUDING BUT NOT LIMITED TO PAVEMENT, DRAINAGE FACILITIES, CURBS, GUTTERS, SIGNS, LANDSCAPING, IRRIGATION SYSTEMS, ETC., REMOVED OR DAMAGED AS A RESULT OF HIS OPERATION USING MATERIALS AND WORKMANSHIP IN ACCORDANCE WITH "HAWAII STANDARD SPECIFICATIONS FOR ROAD, BRIDGE, AND PUBLIC WORKS CONSTRUCTION", 2005 AS AMENDED, "STANDARD DETAILS", SEPTEMBER 1984 FOR PUBLIC WORKS CONSTRUCTION OF THE DEPARTMENT OF PUBLIC WORKS, COUNTY OF MAUI, AS AMENDED.

11. CONTRACTOR SHALL PROVIDE, INSTALL AND MAINTAIN ALL NECESSARY SIGNS, LIGHTS, FLARES, BARRICADES AND OTHER PROTECTIVE DEVICES FOR THE PROTECTION, SAFETY AND CONVENIENCE OF THE PUBLIC ACCORDING TO THE "MANUAL ON UNIFORM TRAFFIC CONTROL DEVICES FOR STREETS AND HIGHWAYS", 2009 AND THE "RULES AND REGULATIONS GOVERNING THE USE OF TRAFFIC CONTROL DEVICES AT WORK SITES ON/OR ADJACENT TO PUBLIC STREETS AND HIGHWAYS", ADOPTED BY THE HIGHWAY SAFETY COORDINATOR AND THE U.S. FEDERAL HIGHWAY ADMINISTRATION "MANUAL ON UNIFORM TRAFFIC CONTROL DEVICES FOR HIGHWAY CONSTRUCTION AND MAINTENANCE OPERATIONS", DATED 2009.

12. THE DIRECTOR OF PUBLIC WORKS HAS THE RIGHT TO STOP CONSTRUCTION SHOULD ANY WORK BE FOUND CONTRARY TO THE APPROVED CONSTRUCTION PLAN OR DETRIMENTAL TO THE PUBLIC'S INTEREST.

13. THE CONTRACTOR, AT HIS OWN EXPENSE, SHALL KEEP THE PROJECT AREA AND SURROUNDING AREA FREE FROM DUST NUISANCE. THE WORK SHALL BE IN CONFORMANCE WITH THE AIR POLLUTION CONTROL STANDARDS AND REGULATIONS OF THE STATE DEPARTMENT OF HEALTH, AND COUNTY GRADING ORDINANCE.

14. THE CONTRACTOR SHALL REMOVE AND DISPOSE ALL SILT AND DEBRIS DEPOSITED IN DRAINAGE FACILITIES, ROADWAYS AND OTHER AREAS RESULTING FROM HIS WORK. THE COST INCURRED FOR ANY NECESSARY REMEDIAL ACTION ORDERED BY THE DIRECTOR OF PUBLIC WORKS SHALL BE PAID BY THE CONTRACTOR.

15. CONSTRUCTION DEBRIS AND WASTES SHALL BE DEPOSITED AT AN APPROPRIATE SITE. THE CONTRACTOR SHALL INFORM THE DIRECTOR OF PUBLIC WORKS OF THE LOCATION OF THE DISPOSAL SITES. THE DISPOSAL SITE MUST FULFILL THE REQUIREMENTS OF THE GRADING ORDINANCE. THE CONTRACTOR SHALL MINIMIZE ITS CONSTRUCTION DEBRIS AND SOLID WASTES.

16. CONTRACTOR SHALL PROVIDE VEHICULAR AND PEDESTRIAN ACCESS ROUTES AT ALL TIMES TO ALL EXISTING FACILITIES.

GENERAL CONSTRUCTION NOTES (CONT.)

17. THE EXISTING ASPHALTIC CONCRETE (A.C.) PAVEMENT SHALL BE SAW CUT BEFORE COMMENCEMENT OF WORK.

18. ALL DIMENSIONS AND DETAILS SHOWN ON THE DRAWINGS SHALL BE CHECKED AND VERIFIED PRIOR TO THE START OF CONSTRUCTION, AND ANY DISCREPANCIES SHALL BE IMMEDIATELY BROUGHT TO THE ATTENTION OF THE ENGINEER FOR CLARIFICATION.

19. PURSUANT OF MAUI COUNTY CODE SECTION 3.44.015(C), THE COUNTY OF MAUI IS NOT RESPONSIBLE FOR ANY PARK, ROADWAY, EASEMENT (INCLUDING BUT NOT LIMITED TO DRAINAGE, SEWER, ACCESS, RECLAIMED WATER OR AVIGATION EASEMENT), OR ANY OTHER INTEREST IN REAL PROPERTY SHOWN ON THIS MAP OR SHOWN ON THESE PLANS, UNLESS THE MAUI COUNTY COUNCIL HAS ACCEPTED ITS DEDICATION BY A RESOLUTION APPROVED BY A MAJORITY OF COUNCIL'S MEMBERS AT A REGULAR OR SPECIAL MEETING OF THE MAUI COUNTY COUNCIL.

20. THE CONTRACTOR SHALL SUBMIT ONE HARDCOPY AND ONE COMPLETE ELECTRONIC SET (TIF OR PDF) OF THE FINAL FIELD POSTED AS-BUILT DRAWINGS PRIOR TO THE FINAL APPROVAL AND ACCEPTANCE OF THE IMPROVEMENTS.

21. COMPACTION REQUIREMENTS:

    A. TESTING OF MATERIALS SHALL BE CONDUCTED BY AN APPROVED INDEPENDENT TESTING AGENCY IN ACCORDANCE WITH ASTM STANDARD METHODS OR AS SPECIFIED BY THE DEPARTMENT OF PUBLIC WORKS, ENGINEERING DIVISION, AS FOLLOWS:

        1. EMBANKMENT/SELECT BORROW AND SUBGRADE MATERIALS: ONE (1) COMPACTION TEST PER 600 SQUARE YARDS PER LIFT;
        2. AGGREGATE SUBBASE COURSE: ONE (1) COMPACTION TEST PER 400 SQUARE YARDS; ONE (1) GRADATION AND SAND EQUIVALENT TEST PER LIFT PER PROJECT;
        3. AGGREGATE BASE COURSE: ONE (1) COMPACTION TEST PER 300 SQUARE YARDS; ONE (1) GRADATION AND SAND EQUIVALENT TEST PER LIFT PER PROJECT;
        4. ASPHALT CONCRETE PAVEMENT OR ASPHALT TREATED BASE COURSE: THREE (3) A.C. CORES FOR THICKNESS AND DENSITY TESTS PER PROJECT;
        5. TRENCH BACKFILL MATERIAL: ONE (1) TEST FOR EACH 300 LINEAL FEET OF TRENCH PER LIFT OF MATERIAL.
        6. ADDITIONAL TESTING MAY BE REQUIRED FOR ANY REASON INCLUDING RESULTS TO THE COUNTY'S INSPECTION AGENCY FOR REVIEW AND APPROVAL PRIOR TO THE COUNTY'S ACCEPTANCE OF WORK.

    B. CONTRACTOR SHALL SUBMIT ALL TESTING REPORTS, INCLUDING RESULTS TO THE COUNTY'S INSPECTION AGENCY FOR REVIEW AND APPROVAL PRIOR TO COUNTY'S ACCEPTANCE OF WORK.

    C. THE CONTRACTOR SHALL BE REQUIRED TO NOTIFY THE COUNTY OF ANY TESTING FAILURES AND CORRECT EACH FAILURE PRIOR TO PROCEEDING TO THE NEXT PHASE OF CONSTRUCTION.

23. A CCTV MAY ALSO BE REQUIRED BY THE CONTRACTOR FOR APPROVAL AND ACCEPTANCE OF THE CONSTRUCTION IMPROVEMENTS FOR ANY PRIVATE SEWER MAINS/LATERALS AS REQUIRED BY THE COUNTY DEPT. OF ENV. MANAGEMENT, WASTE WATER RECLAMATION DIVISION.

NOTES FOR CONSTRUCTION WITHIN COUNTY RIGHT-OF-WAY

1. CONTRACTOR SHALL OBTAIN A PERMIT TO PERFORM WORK ON COUNTY HIGHWAYS FROM THE DEPARTMENT SERVICES ADMINISTRATION TWO WEEKS PRIOR TO THE COMMENCEMENT OF WORK.

2. STANDARD DETAIL DRAWINGS AND STANDARD SPECIFICATIONS OF THE DEPARTMENT OF PUBLIC WORKS SHALL BE INCLUDED AS PART OF THE CONSTRUCTION PLANS.

3. ALL CONSTRUCTION WORK SHALL STRICTLY CONFORM TO THE LATEST VERSION OF THE HAWAII STANDARD SPECIFICATIONS FOR ROAD AND BRIDGE PUBLIC WORKS CONSTRUCTION, AND THE SEPTEMBER 1984 "STANDARD DETAILS" FOR PUBLIC WORKS CONSTRUCTION OF THE DEPARTMENT OF PUBLIC WORKS, AS AMENDED.

4. IF EXISTING UTILITIES, WHETHER OR NOT SHOWN ON PLANS, ARE DAMAGED DURING CONSTRUCTION, THE CONTRACTOR SHALL AT HIS OWN EXPENSE BE REQUIRED TO REPAIR SUCH UTILITIES.

5. CONTRACTOR SHALL PROVIDE, INSTALL AND MAINTAIN ALL NECESSARY SIGNS, LIGHTS, FLARES, BARRICADES, AND OTHER PROTECTIVE DEVICES FOR THE PROTECTION, SAFETY AND CONVENIENCE OF THE PUBLIC, ACCORDING TO THE LATEST VERSION OF THE "MANUAL ON UNIFORM TRAFFIC CONTROL DEVICE FOR STREETS AND HIGHWAYS", AND TO THE RULES AND REGULATIONS GOVERNING THE USE OF TRAFFIC CONTROL DEVICES AT WORKSITES AND/OR ADJACENT TO PUBLIC STREETS AND HIGHWAYS ADOPTED BY THE HIGHWAY SAFETY COORDINATOR AND THE U.S. FEDERAL HIGHWAY ADMINISTRATION "MANUAL ON UNIFORM TRAFFIC CONTROL DEVICES FOR HIGHWAY CONSTRUCTION AND MAINTENANCE OPERATIONS".

6. THE DIRECTOR OF PUBLIC WORKS AND/OR THE DIRECTOR OF THE DEPARTMENT OF WATER SUPPLY HAS THE RIGHT TO STOP CONSTRUCTION SHOULD ANY WORK BE FOUND CONTRARY TO THE APPROVED CONSTRUCTION PLAN OR DETRIMENTAL TO THE PUBLIC'S INTEREST.

7. THE CONTRACTOR SHALL SCHEDULE A PRE-CONSTRUCTION MEETING WITH DEVELOPMENT SERVICES ADMINISTRATION FIVE (5) DAYS PRIOR TO COMMENCEMENT OF CONSTRUCTION.

NOTES FOR CONSTRUCTION WITHIN COUNTY RIGHT-OF-WAY (CONT.)

8. THE CONTRACTOR SHALL, AT HIS OWN EXPENSE, KEEP THE PROJECT AREA AND SURROUNDING AREA FREE FROM DUST NUISANCE. THE WORK SHALL BE IN CONFORMANCE WITH THE AIR POLLUTION CONTROL STANDARDS AND REGULATIONS OF THE STATE DEPARTMENT OF HEALTH AND COUNTY GRADING ORDINANCE.

9. THE CONTRACTOR SHALL REMOVE ALL SILT AND DEBRIS RESULTING FROM HIS WORK AND DEPOSITED IN DRAINAGE FACILITIES, ROADWAYS AND OTHER AREAS. THE COST INCURRED FOR ANY NECESSARY REMEDIAL ACTION ORDERED BY THE DIRECTOR OF PUBLIC WORKS SHALL BE PAID BY THE CONTRACTOR.

10. CONSTRUCTION DEBRIS AND WASTES SHALL BE DEPOSITED AT AN APPROPRIATE WORK SITE. THE CONTRACTOR SHALL INFORM THE DIRECTOR OF PUBLIC WORKS OF THE LOCATION OF THE DISPOSAL SITES. THE THE DISPOSAL SITE MUST FULFILL THE REQUIREMENTS OF THE GRADING ORDINANCE.

11. THE CONTRACTOR SHALL SUBMIT A TIFF AND FIVE (5) COPIES OF THE "AS-BUILT" DRAWINGS PRIOR TO THE FINAL APPROVAL OF THE IMPROVEMENTS.

12. IF THE CLEARANCE BETWEEN A WASTEWATER LINE AND A NEW OR EXISTING WATERLINE IS EIGHTEEN INCHES (18") OR LESS, THE WASTEWATER LINE SHALL BE CONCRETE JACKETED IN ACCORDANCE WITH THE STANDARD DETAILS OF PUBLIC WORKS CONSTRUCTION DATED SEPTEMBER 1984, AS AMENDED.

13. SHOULD HISTORIC SITES SUCH AS WALLS, PLATFORMS, PAVEMENTS, OR MOUNDS, OR REMAINS SUCH AS ARTIFACTS, BURIALS, CONCENTRATION OF SHELL OR CHARCOAL BE ENCOUNTERED DURING CONSTRUCTION ACTIVITIES, WORK SHALL CEASE IMMEDIATELY IN THE IMMEDIATE VICINITY OF THE FIND AND THE FIND SHALL BE PROTECTED FROM FURTHER DAMAGE. THE CONTRACTOR AND/OR LANDOWNER SHALL IMMEDIATELY CONTACT THE STATE HISTORIC PRESERVATION DIVISION (808) 692-8015, WHICH WILL ASSESS THE SIGNIFICANCE OF THE FIND AND RECOMMEND AN APPROPRIATE MITIGATION MEASURE, IF NECESSARY.

14. THE COUNTY OF MAUI IS NOT RESPONSIBLE FOR ANY PARK, ROADWAY, EASEMENT (INCLUDING BUT NOT LIMITED TO DRAINAGE, SEWER, ACCESS, RECLAIMED WATER, OR AVIGATION EASEMENT), OR ANY OTHER INTEREST IN REAL PROPERTY SHOWN ON THIS MAP OR SHOWN ON THESE PLANS, UNLESS THE MAUI COUNTY COUNCIL HAS ACCEPTED ITS DEDICATION BY A RESOLUTION APPROVED BY A MAJORITY OF COUNCIL MEMBERS AT A REGULAR OR CONVEYANCE DOCUMENT RECORDED IN THE BUREAU OF CONVEYANCES OF THE STATE OF HAWAII IN COMPLIANCE WITH MAUI COUNTY CODE SECTION 3.44.015.

15. STEEL PLATE WARNING SIGNS ARE REQUIRED FOR ALL STEEL PLATES IN THE RIGHT-OF-WAY.

16. WHEELCHAIR RAMP INSPECTION/CERTIFICATION FORMS SHALL BE REQUIRED FOR ALL NEWLY CONSTRUCTED RAMPS.

17. ALL STRIPING AND PAVEMENT MARKINGS SHALL BE OF THERMOPLASTIC MATERIAL.

18. COMPACTION REQUIREMENTS:

    a. TESTING OF MATERIALS SHALL BE CONDUCTED BY AN APPROVED INDEPENDENT TESTING AGENCY IN ACCORDANCE WITH ASTM STANDARD METHODS OR AS SPECIFIED BY THE DEPARTMENT OF PUBLIC WORKS, ENGINEERING DIVISION AS FOLLOWS:

        i. EMBANKMENT/SELECT BORROW AND SUBGRADE MATERIALS: ONE (1) COMPACTION TEST PER 600 SQUARE YARDS PER LIFT;
        ii. AGGREGATE SUBBASE COURSE: ONE (1) COMPACTION TEST PER 400 SQUARE YARDS; ONE (1) GRADATION AND SAND EQUIVALENT TEST PER LIFT PER PROJECT;
        iii. AGGREGATE BASE COURSE: ONE (1) COMPACTION TEST PER 300 SQUARE YARDS; ONE (1) GRADATION AND SAND EQUIVALENT TEST PER LIFT PER PROJECT;
        iv. ASPHALT CONCRETE PAVEMENT OR ASPHALT TREATED BASE COURSE; THREE (3) A.C. CORES FOR THICKNESS AND DENSITY TESTS PER PROJECT;
        v. TRENCH BACKFILL MATERIAL: ONE (1) TEST FOR EACH 300 LINEAL FEET OF TRENCH PER LIFT OF MATERIAL.

    b. CONTRACTOR SHALL SUBMIT ALL TESTING REPORTS INCLUDING RESULTS TO THE COUNTY'S INSPECTION AGENCY FOR REVIEW AND APPROVAL PRIOR TO COUNTY'S ACCEPTANCE OF WORK.

    c. THE CONTRACTOR SHALL BE REQUIRED TO NOTIFY THE COUNTY OF ANY TESTING FAILURES AND CORRECT EACH FAILURE PRIOR TO PROCEEDING TO THE NEXT PHASE OF CONSTRUCTION.

GRADING NOTES

1. ALL GRADING AND STOCKPILING WORK SHALL BE IN ACCORDANCE WITH MAUI COUNTY CODE, TITLE 20, CHAPTER 8.

2. ALL DEBRIS SHALL BE REMOVED FROM THE SITE AND PREMISES LEFT IN A "RAKE CLEAN" CONDITION.

3. THE CONTRACTOR, AT HIS EXPENSE, SHALL KEEP THE PROJECT AND SURROUNDING AREA FREE FROM DUST NUISANCE.

4. ALL GRADING OPERATIONS SHALL BE PERFORMED IN CONFORMANCE WITH THE APPLICABLE PROVISIONS OF CHAPTER 54, WATER QUALITY STANDARDS, AND CHAPTER 55, WATER POLLUTION CONTROL, OF TITLE 11, ADMINISTRATIVE RULES OF THE STATE DEPARTMENT OF HEALTH, AND IF APPLICABLE, THE NPDES PERMIT FOR THE PROJECT.

5. ALL EXISTING UTILITIES, WHETHER OR NOT SHOWN ON THE PLANS, SHALL BE PROTECTED AT ALL TIMES, UNLESS NOTED OTHERWISE.

6. ALL PLANTER AREAS SHALL BE SODDED OR PLANTED AS SOON AS FINAL GRADES HAVE BEEN ESTABLISHED. PLANTING SHALL NOT BE DELAYED UNTIL ALL GRADING WORK HAS BEEN COMPLETED. GRADING TO FINAL GRADE SHALL BE CONTINUOUS, AND ANY AREA WITHIN WHICH WORK HAS BEEN INTERRUPTED OR DELAYED SHALL BE PLANTED. PLANTING SHALL BE MAINTAINED TO MINIMIZE EROSION.

GRADING NOTES (CONT.)

7. THE CONTRACTOR SHALL OBTAIN A GRADING PERMIT FROM THE DEVELOPMENT SERVICES ADMINISTRATION TWO WEEKS PRIOR TO COMMENCEMENT OF ANY CLEARING AND GRUBBING WORK. A SITE SPECIFIC EROSION CONTROL PLAN SHOWING STRUCTURAL & NON-STRUCTURAL BEST MANAGEMENT PRACTICES MUST BE SUBMITTED TO AND APPROVED BY THE DEVELOPMENT SERVICES ADMINISTRATION PRIOR TO ISSUANCE OF A GRADING PERMIT AND COMMENCEMENT OF ANY CLEARING AND GRUBBING WORK.

8. THE UNDERGROUND PIPES, CABLES OR DUCTLINES KNOWN TO EXIST BY THE ENGINEER FROM HIS SEARCH OF RECORDS ARE INDICATED ON THE PLANS. THE CONTRACTOR SHALL VERIFY THE LOCATION AND DEPTH OF THE FACILITIES AND EXERCISE PROPER CARE IN EXCAVATING IN THE AREA. WHEREVER CONNECTIONS OF NEW UTILITIES TO EXISTING UTILITIES ARE SHOWN ON THE PLANS, THE CONTRACTOR SHALL EXPOSE THE EXISTING LINES AT THE PROPOSED CONNECTIONS TO VERIFY THEIR LOCATIONS AND DEPTHS PRIOR TO EXCAVATION FOR THE NEW LINES.

9. THE COUNTY SHALL BE INFORMED OF THE LOCATION OF THE BORROW/DISPOSAL SITE FOR THE PROJECT WHEN THE APPLICATION FOR A GRADING PERMIT IS MADE. THE BORROW/DISPOSAL SITE MUST ALSO FULFILL THE REQUIREMENTS OF THE GRADING ORDINANCE.

10. NO GRADING WORK SHALL BE DONE ON SATURDAYS, SUNDAYS AND HOLIDAYS AT ANY TIME WITHOUT PRIOR NOTICE TO THE CHIEF ENGINEER.

11. THE LIMITS OF THE AREA TO BE GRADED SHALL BE FLAGGED BEFORE THE COMMENCEMENT OF THE GRADING WORK.

SOLID WASTE CONSTRUCTION NOTES

1. UNLESS OTHERWISE SPECIFIED, THE CONTRACTOR IS RESPONSIBLE FOR THE PROPER HANDLING, STORAGE AND/OR DISPOSAL OF ALL WASTE GENERATED BY CONSTRUCTION ACTIVITIES INCLUDING GRUBBING AND EXCESS EXCAVATED MATERIALS. ANY MATERIAL BROUGHT TO THE COUNTY LANDFILLS WILL BE SUBJECT TO THE INSTITUTED TIPPING FEE SYSTEM WITH NO EXCEPTIONS OR EXEMPTIONS.

TEMPORARY DUST CONTROL MEASURES

1. EXCAVATION, EMBANKMENT AND IMPORTED MATERIALS SHALL BE KEPT DAMPENED WITH WATER DURING THE GRADING OPERATIONS.

2. THE CONTRACTOR SHALL MAINTAIN A SUITABLE WATER SYSTEM AND DAMPEN THE GRADED OR GRUBBED SITE WITH WATER.

3. AT THE END OF EACH DAY, SEVEN (7) DAYS A WEEK, THE PROJECT SITE SHALL BE KEPT DAMP WITH WATER. THE SITE SHALL BE SUFFICIENTLY DAMPENED SO THAT THE SITE WILL REMAIN MOISTENED DURING THE NIGHT.

TEMPORARY EROSION CONTROL MEASURES

1. TEMPORARY GROUND COVER SHALL BE APPLIED WITHIN A PERIOD OF 14 CALENDAR DAYS AFTER THE SITE HAS BEEN GRADED, OR BARED OF VEGETATION, OR IF FINAL GRADING OF THE SITE WILL BE SUSPENDED FOR MORE THAN 21 CALENDAR DAYS. ALL COST FOR MAINTAINING IRRIGATING AND REMOVING TEMPORARY EROSION CONTROL MEASURES WILL BE BORNE BY THE CONTRACTOR.

2. THE CONTRACTOR MAY USE HYDRO-MULCH TO APPLY THE TEMPORARY GROUND COVER.

3. TEMPORARY GROUND COVER SHALL CONSIST OF 2,000 LBS. PER ACRE WOOD CELLULOSE FIBER MULCH AND 65 LBS. PER ACRE TACKIFIER.

PERMANENT EROSION CONTROL MEASURES

1. THE CONTRACTOR SHALL GRASS ALL EXPOSED AREAS THAT HAVE BEEN CONSTRUCTED TO FINAL GRADES. SITES THAT WILL NOT BE DISTURBED FOR A PERIOD OF TWENTY-ONE (21) DAYS OR MORE WILL BE STABILIZED FOURTEEN (14) DAYS AFTER THE LAST DISTURBANCE AS PER SECTION 20.08.035(G) OF THE MAUI COUNTY CODE. ALL COSTS FOR MAINTAINING AND WATERING PERMANENT EROSION CONTROL MEASURES WILL BE BORNE BY THE CONTRACTOR.

2. THE CONTRACTOR MAY USE HYDRO-MULCH TO APPLY THE PERMANENT GROUND COVER.

3. PERMANENT BERMUDA GROUND COVER SHALL CONSIST OF 75 LBS. PER ACRE BERMUDA GRASS, 50 LBS. PER ACRE RYE GRASS, 6,000 LBS. PER ACRE GYPSUM BASED GEOBINDER, 2,000 LBS. PER ACRE WOOD CELLULOSE FIBER MULCH, AND 400 LBS. PER ACRE 10-30-10 FERTILIZER.

4. PERMANENT GROUND COVER ALONG NATURAL DRAINAGEWAYS SHALL CONSIST OF 100 LBS. PER ACRE BERMUDA GRASS, 50 LBS. PER ACRE RYE GRASS, 1,500 LBS. PER ACRE WOOD CELLULOSE FIBER MULCH, 400 LBS. PER ACRE 10-30-10 FERTILIZER, AND PERMANENT EROSION CONTROL/TURF REINFORCEMENT MATTING.

NOTES FOR ENVIRONMENTAL PROTECTION

1. ENVIRONMENTAL PROTECTION NOTES PERTAINING TO AIR AND WATER POLLUTION SHALL BE ADMINISTERED AND MONITORED BY THE DEPARTMENT OF HEALTH.

2. THE CONTRACTOR, AT HIS OWN EXPENSE, SHALL PROVIDE EFFECTIVE MEASURES FOR THE CONTROL OF FUGITIVE DUST EMISSIONS FROM THE PROJECT AND SURROUNDING AREAS CAUSED BY HIS OPERATIONS. THESE MEASURES SHALL MEET THE REQUIREMENTS OF STATE ADMINISTRATIVE RULES, DEPARTMENT OF HEALTH, AIR POLLUTION CONTROL (11-60.1).

3. ALL GRADING OPERATIONS SHALL BE PERFORMED IN CONFORMANCE WITH THE APPLICABLE PROVISIONS OF THE GRADING ORDINANCE TO PREVENT VIOLATION OF THE STATE ADMINISTRATIVE RULES, DEPARTMENT OF HEALTH, WATER POLLUTION CONTROL AND WATER QUALITY STANDARDS (11-54, 11-55) DUE TO EROSION AND RUNOFF TO STATE WATERS.

4. GRUB MATERIAL, DEMOLITION WASTES, AND CONSTRUCTION WASTES SHALL BE DISPOSED OF AT AN AUTHORIZED SITE HAVING A DEPARTMENT OF HEALTH SOLID WASTE MANAGEMENT PERMIT. OPEN BURNING IS PROHIBITED.

NOTES FOR ENVIRONMENTAL PROTECTION (CONT.)

5. PERMITS REQUIRED:

    A. A NPDES PERMIT MAY BE REQUIRED FROM THE CLEAN WATER BRANCH OF THE DEPARTMENT OF HEALTH FOR STORM WATER DISCHARGE AND HYDROTESTING.

    B. A DEWATERING PERMIT MAY BE REQUIRED TO BE OBTAINED FROM THE CLEAN WATER BRANCH OF THE DEPARTMENT OF HEALTH IF DISCHARGING INTO STATE WATERS.

    C. PERMIT MUST BE OBTAINED PRIOR TO START OF CONSTRUCTION.

    D. IF A NPDES PERMIT IS REQUIRED FOR THIS PROJECT, THE CONTRACTOR SHALL MAINTAIN A STORM WATER POLLUTION PREVENTION PLAN (SWPPP) WHICH INCLUDES A "SITE SPECIFIC BEST MANAGEMENT PRACTICES PLAN" IN ACCORDANCE WITH THE NPDES PERMIT AND STATE OF HAWAII, DEPARTMENT OF HEALTH, CLEAN WATER BRANCH REQUIREMENTS. CONTRACTOR IS RESPONSIBLE TO FILE ANY AMENDMENTS TO THE NPDES PERMIT WITH THE DEPARTMENT OF HEALTH, CLEAN WATER BRANCH.

CONTRACTOR'S RESPONSIBILITY FOR EXISTING LINES, PIPES, SERVICES AND FEATURES

1. INFORMATION REGARDING THE SITE SHOWN ON THE DRAWINGS OR SPECIFICATIONS HAS BEEN OBTAINED BY THE ENGINEER AND IS BELIEVED TO BE REASONABLY CORRECT; HOWEVER, IT IS THE RESPONSIBILITY OF THE CONTRACTOR TO VERIFY ALL SUCH INFORMATION. THE CONTRACTOR SHALL TONE THE AREA TO BE EXCAVATED TO ASCERTAIN THE LOCATION OF UNCHARTED UTILITIES. CONTRACTOR SHALL CONTACT HAWAII ONE CALL CENTER TEN (10) DAYS PRIOR TO ANY EXCAVATION WITHIN STATE OR COUNTY RIGHT-OF-WAY TO ALLOW FOR ADEQUATE RESPONSE TIME IF CONFLICTS ARE FOUND AND NOT CAUSE DELAYS TO THE CONTRACTOR'S WORK.

2. ANY UTILITIES THAT THE CONTRACTOR ENCOUNTERS DURING THE PROGRESS OF THE WORK, SUCH AS BUT NOT LIMITED TO TELEPHONE DUCTS, ELECTRIC DUCTS, WATER LINES, SEWER LINES, ELECTRIC LINES, TRAFFIC SIGNAL DETECTION LOOPS OR DEVICES, AND DRAINAGE PIPES, WHETHER SHOWN OR NOT ON THE CONTRACT PLANS, SHALL NOT BE DISTURBED OR DAMAGED UNLESS OTHERWISE INSTRUCTED IN THE PLANS AND SPECIFICATIONS.

3. IN THE EVENT THE UTILITIES ARE DAMAGED OR DISTURBED BY THE CONTRACTOR, THE CONTRACTOR SHALL BE HELD LIABLE FOR THE DAMAGED OR DISTURBED UTILITIES AND SHALL REPAIR THE DAMAGED OR DISTURBED UTILITIES TO EXISTING OR BETTER CONDITION AT NO COST TO THE OWNER. ANY DAMAGE CLAIMS DUE TO THE DISRUPTION OF SERVICE CAUSED BY THE UTILITIES BEING DAMAGED SHALL BE PAID BY THE CONTRACTOR, WHO SHALL SAVE HARMLESS THE OWNER AND ENGINEER FROM ALL SUITS, ACTIONS OR CLAIMS OF ANY CHARACTER BROUGHT ON ACCOUNT OF SUCH DAMAGES.

4. IN THE EVENT UTILITIES WHICH WERE NOT SHOWN ON THE PLANS AND SPECIFICATIONS ARE DAMAGED OR DISTURBED BY THE CONTRACTOR, THE CONTRACTOR SHALL BE HELD LIABLE. THE CONTRACTOR SHALL CONTACT ALL UTILITY COMPANIES AND EXPOSE ALL UTILITY LINES PRIOR TO ANY EXCAVATION AND/OR INSTALLATION OF LINES.

5. ANY EXISTING IRRIGATION LINES, LANDSCAPE AND/OR DECORATIVE FEATURES DISTURBED DURING CONSTRUCTION SHALL BE RESTORED TO EXISTING OR BETTER CONDITION AT NO COST TO THE OWNER.

6. ALL EXISTING TRAFFIC SIGNALS, IF APPLICABLE, SHALL BE KEPT OPERATIONAL DURING THE COURSE OF CONSTRUCTION. APPROVED DETECTION DEVICES USED ON A TEMPORARY BASIS DURING CONSTRUCTION SHALL BE INSTALLED THREE (3) WORKING DAYS PRIOR TO ANY SIGNALIZED INTERSECTION WORK WHICH INCLUDES BUT NOT LIMITED TO PAVEMENT RECONSTRUCTION, UTILITY TRENCHING, AND COLD PLANING. ALL WORK SHALL BE DONE IN ACCORDANCE WITH THE HAWAII STANDARD SPECIFICATIONS FOR ROAD AND BRIDGE CONSTRUCTION, 2005 AND AT THE CONTRACTOR'S EXPENSE.

PUBLIC HEALTH, SAFETY, AND CONVENIENCE

1. THE CONTRACTOR SHALL OBSERVE AND COMPLY WITH ALL FEDERAL, STATE AND LOCAL LAWS REQUIRED FOR THE PROTECTION OF PUBLIC HEALTH, SAFETY AND ENVIRONMENTAL QUALITY.

2. THE CONTRACTOR, AT HIS OWN EXPENSE, SHALL KEEP THE PROJECT AND SURROUNDING AREAS FREE FROM DUST NUISANCE. THE WORK SHALL BE IN CONFORMANCE WITH THE AIR POLLUTION STANDARDS AND REGULATIONS OF THE STATE DEPARTMENT OF HEALTH. THE COUNTY OF MAUI MAY REQUIRE SUPPLEMENTARY MEASURES AS NECESSARY.

3. THE CONTRACTOR SHALL BE RESPONSIBLE FOR THE CLEANING AND REMOVAL OF ALL SILT AND DEBRIS DEPOSITED AND ACCUMULATED WITHIN DOWNSTREAM WATERWAYS, DITCHES AND DRAIN PIPES AND ON PUBLIC AND PRIVATE ROADWAYS GENERATED BY HIS WORK. THE CONTRACTOR AGREES TO REIMBURSE THE COUNTY OF MAUI FOR ALL COSTS EXPENDED IN PERFORMANCE OF THE ABOVE WORK IF REQUIRED FOR PUBLIC HEALTH AND SAFETY, OR MADE NECESSARY BY NON-PERFORMANCE BY THE CONTRACTOR.

4. THE CONTRACTOR SHALL PROVIDE, INSTALL AND MAINTAIN ALL NECESSARY SIGNS, LIGHTS, FLARES, BARRICADES, MARKERS, CONES AND OTHER PROTECTIVE FACILITIES AND SHALL TAKE ALL NECESSARY PRECAUTIONS FOR THE PROTECTION, CONVENIENCE AND SAFETY OF THE PUBLIC.

5. THE CONTRACTOR SHALL PROVIDE A NOISE POLLUTION CONTROL PLAN WHEN APPLYING FOR A CONSTRUCTION PERMIT.

6. TEMPORARY PEDESTRIAN ROUTES SHALL BE MAINTAINED IN SAFE, PASSABLE AND ACCESSIBLE CONDITION COMPLYING WITH ADAAG 402.1.

ATA
AustinTsutsumi
& ASSOCIATES, INC.
CIVIL ENGINEERS I SURVEYORS
HONOLULU I WAILUKU I HILO, HAWAII
501 SUMNER STREET, SUITE 521
HONOLULU, HAWAII 96817
PHONE: 808-533-3646
FAX: 808-526-1267

STATE OF HAWAII
DEPARTMENT OF
HAWAIIAN HOME LANDS

PŪLEHUNUI
REGIONAL
INFRASTRUCTURE

AUSTIN, TSUTSUMI & ASSOC., INC.
ENGINEERS, SUVEYORS • HONOLULU, HAWAII

BRYAN H. KOBA
LICENSED PROFESSIONAL ENGINEER
No. 14948
HAWAII U.S.A.

This work was prepared by me or under my supervision and construction of this project will be under my observation. (Observation of construction as defined in Chapter 16-115 Subchapter 1 Definitions of the Hawaii Administrative Rules "Professional Engineers, Architects, Surveyors, and Landscape Architects.")

SIGNATURE APRIL 30, 2020
EXP. DATE OF THE LICENSE

0 1 2
LINE IS 2 INCHES AT FULL SIZE
(If NOT 2-inches : Scale Accordingly)

REVISION	DATE	BRIEF	BY

Project No:	16-576
Scale:	AS NOTED
Date:	1/31/2020
Designed By:	BHK
Drawn By:	BHK
Checked By:	

CONSTRUCTION NOTES – 1

DWG. NO.
G-1
SHEET 3 OF 201

FILE	POCKET	FOLDER	NO.

WATER NOTES

1. THE CONTRACTOR SHALL NOTIFY THE DEPARTMENT OF WATER SUPPLY (DWS), IN WRITING, ONE (1) WEEK PRIOR TO COMMENCEMENT OF WORK.

2. IF CONSTRUCTION OF WATER SYSTEM IMPROVEMENTS WILL AFFECT DWS CONSUMERS, CONTRACTOR SHALL NOTIFY CONSUMERS BY RADIO/NEWSPAPER TWO (2) DAYS BEFORE AND ON DAY OF CONNECTION. CONTRACTOR SHALL ALSO NOTIFY CONSUMERS HOUSE–TO–HOUSE ONE (1) DAY BEFORE CONNECTION WORK.

3. ALL MATERIALS USED AND METHODS OF CONSTRUCTION OF WATER SYSTEM FACILITIES SHALL BE IN ACCORDANCE WITH THE LATEST REVISIONS OF DWS WATER SYSTEM STANDARDS. CONTRACTOR SHALL OBTAIN THE LATEST REVISIONS OF THE DWS STANDARDS BEFORE COMMENCING CONSTRUCTION.

4. ALL WATER SYSTEM WORK SHALL BE PERFORMED BY CONTRACTORS POSSESSING VALID STATE OF HAWAII CONTRACTOR'S LICENSES, REGARDLESS OF THE VALUE OF THE WORK.

5. CONTRACTOR SHALL FOLLOW ALL LOCAL, STATE, FEDERAL LAWS, RULES AND REGULATIONS REGARDING THE HANDLING, REMOVAL AND DISPOSAL OF ASBESTOS PIPE.

6. CONTRACTOR SHALL PROTECT EXISTING WATERLINE DURING COURSE OF CONSTRUCTION AND SUPPORT EXPOSED WATERLINE TO PREVENT ANY MOVEMENT.

7. THE EXACT DEPTH AND LOCATION OF EXISTING WATERLINES, SERVICE LATERALS AND OTHER UTILITIES ARE NOT KNOWN. IT SHALL BE THE CONTRACTOR'S RESPONSIBILITY TO LOCATE SAME PRIOR TO TRENCHING FOR THE NEW WATERLINE. THE COST OF LOWERING, RELOCATING OR ADJUSTING EXISTING WATERLINES, SERVICE LATERALS AND APPURTENANCES, WHETHER SHOWN OR NOT SHOWN ON THE CONSTRUCTION PLANS AT THE CONTRACTOR'S EXPENSE.

8. PAVEMENT RESURFACING/RESTORATION:

   A. CONTRACTOR SHALL VERIFY LOCATION OF EXISTING DWS VALVES MANHOLES, WHEN AFFECTED BY THE WORK, PRIOR TO START OF CONSTRUCTION.

   B. ALL WATER VALVE AND WATER MANHOLE CONCRETE COLLARS WITHIN THE PROJECT LIMITS SHALL BE DEMOLISHED AND RECONSTRUCTED PER DWS STANDARD DETAIL V12 AND V23, REPECTIVELY, AT THE CONTRACTOR'S EXPENSE.

   C. THE VALVE BOX RISER AND COVER OF ALL WATER VALVES WITHIN THE PROJECT LIMITS SHALL BE REPLACED AT THE CONTRACTOR'S EXPENSE.

   D. CONTRACTOR SHALL ADJUST DWS SLIDING VALVE BOX ASSEMBLY AND MANHOLE FRAME AND COVER TO FINSHED GRADE.

   E. PRIOR TO PAVEMENT RESUFACING/RESTORATION WORK, THE CONTRACTOR SHALL SCHEDULE INSPECTION WITH DWS.

9. ANY SLIDING VALVE BOX ASSEMBLY, MANHOLE COVER, OR CONCRETE COLLAR, WHETHER DISCOVERED DAMAGED OR NOT SPECIFIED ON THE PLANS TO BE ADJUSTED OR REPLACED AT THE CONTRACTOR'S EXPENSE.

10. CONTRACTOR SHALL ADJUST TO FINISHED GRADES, ALL UTILITIES (i.e., WATER, SEWER, DRAIN, etc.) AFFECTED BY THE WORK WHETHER SHOWN OR NOT SHOWN ON THE CONSTRUCTION PLANS AT THE CONTRACTOR'S EXPENSE.

11. CONTRACTOR SHALL RESTORE ALL ROAD IMPROVEMENTS DISTURBED OR DAMAGED DURING CONSTRUCTION IN ACCORDANCE WITH THE 2005 "HAWAII STANDARD SPECIFICATIONS FOR ROAD AND BRIDGE CONSTRUCTION" AS AMENDED, TO THE SATISFACTION OF THE DEPARTMENT OF PUBLIC WORKS AT THE CONTRACTOR'S EXPENSE. ROAD IMPROVEMENTS INCLUDE, BUT AT NOT LIMITED TO, PAVEMENT MARKERS, SHOULDER DRESSING, STRIPING, AND SPEED HUMPS.

12. CONCRETE FOR REACTION BLOCKS AND ANCHOR BLOCKS SHALL BE DWS CLASS 2500.

13. THE MAXIMUM DISTANCE BETWEEN VALVE NUT AND TOP OF MANHOLE COVER SHALL BE THREE (3) FEET.

14. CONTRACTOR SHALL SUBMIT A MATERIALS LIST TO DWS FOR APPROVAL PRIOR TO CONSTRUCTION.

15. CONNECTION TO DWS SYSTEM:

   A. CONTRACTOR SHALL BE RESPONSIBLE FOR FURNISHING ALL NECESSARY FITTINGS AND OTHER MATERIALS AND EQUIPMENT REQUIRED FOR THE HOOK–UP. CONTRACTOR SHALL VERIFY THE EXACT LOCATION, DEPTH, TYPE, AND CONDITION OF THE EXISTING LINE BEFORE ORDERING MATERIALS FOR THE HOOK–UP. CONTRACTOR SHALL, HOWEVER, CHECK WITH DWS BEFORE EXCAVATING FOR VERIFICATION PURPOSES.

   B. WHENEVER FEASIBLE, MECHANICAL JOINT FITTINGS SHALL BE USED FOR BURIED APPLICATIONS, AND FLANGED JOINT FITTINGS SHALL BE USED FOR EXPOSED APPLICATIONS.

   C. DWS PERSONNEL MAY BE REQUIRED TO BE PRESENT OR ASSIST WITH CONNECTIONS TO THE EXISTING WATER SYSTEM. THE CONTRACTOR SHALL BE RESPONSIBLE FOR ALL COSTS INCURRED BY DWS FOR SAID WORK.

WATER NOTES (CONT.)

   D. THE CONTRACTOR SHALL BE RESPONSIBLE FOR FURNISHING ALL MATERIAL, EQUIPMENT AND LABOR FOR TRENCH EXCAVATION, BACKFILLING, CLEANING AND CHLORINATION, PAVING, AND OTHER WORK NECESSARY TO COMPLETE THE HOOK–UP, AS DIRECTED BY AND TO THE SATISFACTION OF DWS.

16. MINIMUM COVER OVER WATER MAIN, 6" DIAMETER OR LARGER, SHALL BE 3'–0". MINIMUM COVER FOR 4" DIAMETER SHALL BE 2'–6". MINIMUM COVER FOR DIAMETERS LESS THAN 4" SHALL BE 1'–6".

17. CONTRACTOR SHALL ENSURE INSTALLATION OF WATERLINES, SERVICE LATERALS AND APPURTENANCES HAVE PROPER CLEARANCES FROM EXISTING TREES, WALLS, FENCES, ETC., IN ACCORDANCE WITH CURRENT DWS WATER SYSTEM STANDARDS.

18. CONTRACTOR SHALL VERIFY AND MAINTAIN 18" MINIMUM CLEARANCE WITH WATERLINE OR SERVICE LATERAL CROSSING OVER EXISTING SEWERLINE OR SERVICE LATERAL. INSTALL REINFORCED CONCRETE JACKET AROUND SEWERLINE WHERE SEWER IS ABOVE WATERLINE OR LESS THAN 18" BELOW WATERLINE. THE LENGTH OF JACKET REQUIRED SHALL BE AS SPECIFIED IN TABLE 100–5 OF THE DWS STANDARDS. PROVIDE 6" MINIMUM CLEARANCE FROM OUTSIDE JACKET TO WATERLINE OR SERVICE LATERAL. STANDARD CONCRETE JACKET DETAILS FOR SEWERLINE AS SPECIFIED BY THE DEPARTMENT OF PUBLIC WORKS STANDARDS SHALL BE FOLLOWED.

19. CONTRACTOR SHALL HAVE LICENSED SURVEYOR STAKE OUT WATERLINE BASELINE STATIONING, RIGHT–OF–WAY LIMITS, PROPERTY LINES, AND EASEMENT LINES TO ENSURE PROPER LOCATION OF WATER SYSTEM IMPROVEMENTS.

20. BOLTS FOR EXPOSED FLANGED DUCTILE IRON PIPE JOINTS SHALL BE EITHER SILICON BRONZE BOLTS & NUTS OR 316 STAINLESS STEEL BOLTS WITH THE HEAVY–DUTY STAINLESS STEEL NUTS (ONLY) FURNISHED WITH TRIPAC 2000 BLUE COATING SYSTEM. ANTI–SEIZE SHALL NOT BE USED. T–BOLTS FOR DUCTILE IRON MECHANICAL JOINT (MJ) PIPE AND FITTING CONNECTIONS IN UNDERGROUND SITUATIONS SHALL BE ONE OF THE FOLLOWING SYSTEMS:

   A. 316 STAINLESS STEEL T–BOLTS WITH HEAVY–DUTY STAINLESS STEEL NUTS (ONLY) FURNISHED WITH TRIPAC 2000 COATING SYSTEM. ANTI–SEIZE SHALL NOT BE USED.

   B. COR–TEN T–BOLTS AND NUTS WITH HIGH GRADE ZINC SACRIFICIAL ANODES, EQUIVALENT TO "DURATRON" SACRIFICIAL "SAC–NUT" MODULES, INSTALLED ON THE NUTS FOR ALL STANDARD COR–TEN T–BOLTS.

   C. COR–TEN T–BOLTS AND NUTS BOTH FACTORY COATED WITH TRIPAC 2000 BLUE COATING SYSTEM BY "TRIPAC FASTENERS".

   ALL HOT FORGED STAINLESS STEEL BOLTS ARE REQUIRED TO BE PASSIVATED PER ASTM A380. MANUFACTURER CERTIFICATES ARE REQUIRED FOR PROOF WITH EACH SHIPMENT.

21. CONTRACTOR SHALL FURNISH AND INSTALL DUCTILE IRON NIPPLES FOR COMPLETE INSTALLATION OF THE WATERLINE, WHETHER SHOWN OR NOT SHOWN ON THE CONSTRUCTION PLANS, AT THE CONTRACTOR'S EXPENSE.

22. CONTRACTOR SHALL FURNISH TEMPORARY CLEANOUTS WHEN NECESSARY TO TEST, FLUSH, AND CHLORINATE THE WATERLINE AT THE CONTRACTOR'S EXPENSE.

23. CONTRACTOR SHALL REMOVE AND DISPOSE OF ALL PORTIONS OF ABANDONED WATERLINES THAT ARE EXPOSED OR WITHIN 12–INCHES BELOW THE GROUND SURFACE AT THE CONTRACTOR'S EXPENSE.

24. ALL BURIED METALS, INCLUDING COPPER PIPES, SHALL BE WRAPPED WITH POLY–WRAP. FOR ALL BURIED INSTALLATIONS OF DUCTILE IRON PIPE AND FITTINGS, POLY–WRAP IS REQUIRED EXCEPT WITHIN CONCRETE JACKETS.

25. LUBRICATE HYDRANT NOZZLE THREADS WITH NON–TOXIC GREASE.

26. CONTRACTOR SHALL PAINT AND NUMBER THE FIRE HYDRANT(S). NUMBERING TO BE FURNISHED BY DWS.

27. WATER MAINS AND APPURTENANCES SHALL BE SUBJECT TO HYDROSTATIC TESTING IN ACCORDANCE WITH THE LATEST REVISION OF AWWA C600, UNDER THE "HYDROSTATIC TESTING" SECTION, TO A PRESSURE OF AT LEAST 1.5 TIMES THE WORKING PRESSURE. UNLESS OTHERWISE STATED IN THE CONSTRUCTION DOCUMENTS OR LIMITED BY THE PRESSURE RATING OF EQUIPMENT, THE PRESSURE TEST AND LEAKAGE TEST SHALL BE PERFORMED AT 225 POUNDS PER SQUARE INCH PRESSURE.

28. DEVELOPER SHALL SUBMIT A COST LIST ALONG WITH AN AFFIDAVIT FOR THE WATER SYSTEM PRIOR TO ACCEPTANCE.

29. CONTRACTOR SHALL SUBMIT (1) SETS OF RECORD DRAWINGS VIA A CONSULTANT PRIOR TO ACCEPTANCE OF THE WATER SYSTEM. AN ELECTRONIC IMAGE FILE IN PDF FORMAT AT FULL PAGE SIZE (24"x36") SHALL BE PROVIDED TO THE DWS FOR ALL PROJECTS.

WASTE WATER NOTES

1. ALL WASTEWATER LINES AND APPURTENANCES SHALL CONFORM TO STANDARD DETAILS FOR PUBLIC WORKS CONSTRUCTION, DATED SEPTEMBER 1984, OF THE DEPARTMENT OF PUBLIC WORKS, COUNTY OF MAUI.

2. ALL SEWERLINES AND APPURTENANCES SHALL FOLLOW THE DESIGN STANDARD OF DEPARTMENT OF ENVIRONMENTAL MANAGEMENT WASTEWATER RECLAMATION DIVISION, COUNTY OF MAUI, VOLUMES 1 & 2, DATED JULY 1993 AND JULY 1984 RESPECTIVELY, UNLESS OTHERWISE NOTED.

WASTE WATER NOTES (CONT.)

3. ALL WASTERWATER LINES AND APPURTENANCES INSTALLATIONS SHALL CONFORM TO THE STANDARD SPECIFICATIONS FOR PUBLIC WORKS CONSTRUCTION DATED SEPTEMBER 1986. IF ANY CONFLICTS ARISE BETWEEN THE STANDARD DETAILS, DESIGN STANDARDS AND THE STANDARD SPECIFICATIONS, THE STRICTEST STANDARD SHALL APPLY, UNLESS APPROVED OTHERWISE.

4. BEFORE CONSTRUCTION COMMENCES, THE CONTRACTOR SHALL SCHEDULE AND DOCUMENT A PRE–CONSTRUCTION MEETING WITH ALL AGENCIES HAVING UTILITIES AFFECTED BY THE WORK.

5. CONTRACTOR MUST HAVE A SITE SPECIFIC SPILL PREVENTION PLAN (SSSPP) APPROVED BY WWRD PRIOR TO SEWER LINE CONSTRUCTION AND/OR SEWER LATERAL CONNECTION TO EXISTING FACILITIES, OR ANY WORK WITHIN FIVE (5) FEET OF WASTERWATER SYSTEM IMPROVEMENTS.

6. THE DEPARTMENT OF ENVIRONMENTAL MANAGEMENT, WASTEWATER RECLAMATION DIVISION, HAS THE RIGHT TO STOP CONSTRUCTION, SHOULD ANY WORK BE FOUND CONTRARY TO THE APPROVED PLANS AND SPECIFICATIONS, OR DETRIMENTAL TO THE PUBLIC INTEREST.

7. ALL EXISTING WASTEWATER LINES, WHETHER OR NOT SHOWN ON THE PLANS, IF DAMAGED DURING CONSTRUCTION, SHALL BE REPAIRED BY THE CONTRACTOR AND THE CONTRACTOR SHALL PAY ALL EXPENSES.

8. THE CONTRACTOR SHALL NOTIFY THE WASTEWATER RECLAMATION DIVISION FIVE (5) WORKING DAYS PRIOR TO CONNECTION TO ANY EXISTING WASTEWATER LINES WITHIN THE COUNTY OF MAUI.

9. SHOULD THE CONTRACTOR EXCAVATE BEYOND THE TRENCH PAY–WIDTH, AS SPECIFIED IN THE STANDARD DETAILS FOR PUBLIC WORKS CONSTRUCTION, DATED SEPTEMBER 1984, AND SUCH ACTION RESULTS IN A GREATER LOAD TO THE PIPE, THE CONTRACTOR SHALL PROVIDE, AT THE CONTRACTOR'S EXPENSE, A HIGHER CLASS OF BEDDING MATERIAL THAT WILL WITHSTAND THE ADDED LOAD.

10. WASTEWATER LATERAL SHALL BE SIX (6) INCHES AT A MINIMUM OF 2% SLOPE, UNLESS APPROVED OTHERWISE.

11. AN ADVANCE RISER CONNECTION SHALL BE INSTALLED AT EACH NEW WASTEWATER LATERAL.

12. WHERE THE CLEARANCE BETWEEN A WASTEWATER LINE AND A NEW OR EXISTING UTILITY LINE IS EIGHTEEN (18) INCHES, THE WASTEWATER LINE SHALL BE PROTECTED WITH A REINFORCED CONCRETE JACKETED IN ACCORDANCE WITH THE STANDARD DETAILS OF PUBLIC WORKS CONSTRUCTION, DATED SEPTEMBER 1984.

13. WHEN THE WASTEWATER MAINS ARE OF A DIFFERENT MATERIAL THAN THE LATERALS, THE CONTRACTOR SHALL INSTALL APPROVED ADAPTERS.

14. ALL BACKFILL FOR WASTEWATER TRENCHES SHALL BE COMPACTED IN ONE (1) FOOT LIFTS TO A MINIMUM OF 95% OF ITS MAXIMUM DENSITY.

15. WHERE CONSTRUCTION IS TO BE DONE IN PHASE OR INCREMENT, EACH PHASE OR INCREMENT SHALL BE APPROVED BY WASTEWATER RECLAMATION DIVISION BEFORE THE NEXT PHASE OR INCREMENT IS STARTED.

16. ALL WASTEWATER MAINS SHALL PASS A MANDREL TEST AS A CONDITION OF ACCEPTANCE 30 DAYS AFTER COMPLETION AND BACKFILL. THE MANDREL DIAMETER SHALL BE 95% OR MORE OF THE INSIDE DIAMETER OF THE PIPE BEING TESTED.

17. "AS–BUILT DRAWINGS SHALL BE SUBMITTED AS A CONDITION FOR THE FINAL ACCEPTANCE OF THE PROJECT.

18. PRIOR TO INSPECTION BY CLOSED CIRCUIT TELEVISION (CCTV), ALL WASTEWATER LINES INSTALLED, INCLUDING LATERALS, SHALL BE FLUSHED WITH WATER AND ANY ACCUMULATED CONSTRUCTION DEBRIS AND OTHER FOREIGN MATERIALS SHALL BE REMOVED.

19. ALL MAIN WASTEWATER LINES WHICH WILL BE DEDICATED TO THE COUNTY OF MAUI SHALL BE INSPECTED BY CCTV IN STRICT ACCORDANCE WITH DEPARTMENT OF PUBLIC WORKS CCTV POLICY, EFFECTIVE DATE JULY 15, 2001. FINAL ACCEPTANCE OF THE SYSTEM SHALL BE CONTINGENT UPON THE PASSING OF ALL REQUIREMENTS OF THIS POLICY. CCTV RESULTS SHOULD BE SUBMITTED ON DVD PER MEMO DATED OCTOBER 22, 2015. SHOULD ANY OF THE SEWER LATERALS FAIL TO PASS A VISUAL INSPECTION, THEN A CCTV OF ALL LATERALS WILL ALSO BE REQUIRED.

20. ANY CONNECTION MADE UNDER THE WATER TABLE WILL REQUIRE CCTV AT HIGH TIDE TO DETERMINE WATER TIGHTNESS IN ACCORDANCE WITH DEPARTMENT OF PUBLIC WORKS CCTV POLICY, EFFECTIVE DATE JULY 15, 2001. FINAL ACCEPTANCE OF THE SYSTEM SHALL BE CONTINGENT UPON THE PASSING OF ALL REQUIREMENTS OF THIS POLICY.

21. CONTRACTOR SHALL BE RESPONSIBLE FOR RECORDING THE GPS COORDINATES OF ALL BURIED AND CONCEALED WORK TO BE DEDICATED TO THE COUNTY, AND PROVIDE THE GPS DATA TO THE COUNTY PRIOR TO THE PROJECT'S FINAL ACCEPTANCE. AN ACCURATE GPS POINT EVERY (50) FEET ALONG THE MAIN LINE, AT UTILITY CROSSINGS, AND AT ANY INSTALLED APPUTENANCE (INCLUDING BUT NOT LIMITED TO MANHOLES, BENDS, CONCRETE JACKET, CLEANOUT, PIPE DEVIATIONS, CHANGE IN PIPE SIZE, CRITICAL JOINTS, ARV, ETC.). GPS DATA SHALL BE IN NAD 1983 STATE PLANE HAWAII ZONE 2 FIPS 5102 GRID, AND SHALL BE ACCURATE TO WITHIN ONE (1) FOOT. ACQUIRED GPS SURVEY DATA SHALL BE QUALITY CHECKED BY THE CONTRACTOR PRIOR TO SUBMISSION IN SHAPEFILE (.SHP) FORMAT, FOR COMPATIBILITY WITH MAINSTREAM GIS SOFTWARE SUCH AS ESRI ARCMAP.

22. THE CONTRACTOR SHALL CONTACT THE WWRD INSPECTOR AT PHONE # (808)270–7417 A MINIMUM OF 5 WORKING DAYS PRIOR TO THE START OF CONSTRUCTION.

NOTES FOR CONSTRUCTION WITHIN STATE RIGHT–OF–WAY

1. THE CONTRACTOR SHALL OBTAIN A PERMIT TO PERFORM WORK UPON STATE HIGHWAYS FROM THE MAUI DISTRICT ENGINEER, STATE HIGHWAYS, AT 650 PALAPALA DRIVE, PRIOR TO COMMENCEMENT OF WORK WITHIN THE STATE'S HIGHWAY RIGHT–OF–WAY.

2. CONSTRUCTION AND RESTORATION OF ALL EXISTING HIGHWAY FACILITIES WITHIN THE STATE'S RIGHT–OF–WAY, INCLUDING THE LEGAL RELATIONS AND RESPONSIBILITY TO THE PUBLIC, SHALL BE IN ACCORDANCE WITH THE CURRENT HAWAII STANDARD SPECIFICATIONS FOR ROAD AND BRIDGE CONSTRUCTION, AND THE SPECIFICATIONS FOR INSTALLATION OF MISCELLANEOUS IMPROVEMENTS WITHIN STATE HIGHWAYS, OF THE STATE HIGHWAYS DIVISION.

3. WORK MAY BE PERFORMED ONLY BETWEEN THE HOURS OF 8:30 A.M. AND 3:00 P.M., MONDAY THROUGH FRIDAY, EXCEPT STATE HOLIDAYS, UNLESS WHEN OTHERWISE APPROVED IN WRITING BY THE DISTRICT ENGINEER.

   DURING WORK HOURS, ONLY ONE LANE OF TRAFFIC SHALL BE CLOSED, UNLESS OTHERWISE APPROVED IN WRITING BY THE DISTRICT ENGINEER. ALL LANE CLOSURES MUST BE APPROVED BY HDOT ONE (1) WEEK IN ADVANCE.

   AT CERTAIN LOCATIONS, "NO LANE CLOSURE" WILL BE ALLOWED DURING THE "BACK TO SCHOOL JAM", THANKSGIVING WEEKEND, CHRISTMAS / NEW YEAR PERIOD AND AT OTHER TIMES AS DIRECTED BY THE HIGHWAYS DIVISION.

4. THE CONTRACTOR SHALL PROVIDE, INSTALL, AND MAINTAIN ALL NECESSARY SIGNS, LIGHTS FLARES, BARRICADES, MARKERS, CONES, AND OTHER PROTECTIVE FACILITIES, AND SHALL TAKE ALL NECESSARY PRECAUTIONS FOR THE PROTECTION, CONVENIENCE, AND SAFETY OF PUBLIC TRAFFIC. ALL SUCH PROTECTIVE FACILITIES AND PRECAUTIONS TO BE TAKEN SHALL CONFORM WITH THE "ADMINISTRATIVE RULES OF HAWAII GOVERNING THE USE OF TRAFFIC CONTROL DEVICES AT WORK SITES ON OR ADJACENT TO PUBLIC STREETS AND HIGHWAYS", ADOPTED BY THE DIRECTOR OF TRANSPORTATION, AND THE "U.S. FEDERAL HIGHWAY ADMINISTRATION MUTCD – MANUAL ON UNIFORM TRAFFIC CONTROL DEVICES, PART VI – TEMPORARY TRAFFIC CONTROL, 2009 EDITION".

   LANE CLOSURES SHALL CONFORM TO THE TRAFFIC CONTROL PLAN INCORPORATED INTO THESE CONSTRUCTION PLANS AND MUST BE APPROVED BY THE DIVISION PRIOR TO THE ISSUANCE OF THE PERMIT.

5. THE MINIMUM PAVEMENT STRUCTURE SHALL CONSIST OF:

   a. RESIDENTIAL DRIVEWAYS, ON MINOR HIGHWAYS:

      (1) 2 ½" ASPHALT CONCRETE (MIX IV), 8" AGGREGATE BASE COURSE OR 2 ½" ASPHALT CONCRETE AND 8" ASPHALT CONCRETE BASE COURSE OR ASPHALT CONCRETE.

      (2) 4" OF CLASS "A" CONCRETE REINFORCED WITH 6"X 6" – W2.9 X W2.9 WIRE MESH ON 12" AGGREGATE SUBBASE, IF DEEMED NECESSARY BY THE ENGINEER.

   b. COMMERCIAL DRIVEWAYS AND SIDE ROADS ON MINOR HIGHWAYS

      (1) 4" ASPHALT CONCRETE (MIX IV), 8" AGGREGATE BASE COURSE AND 12" SUBBASE, OR 4" ASPHALT CONCRETE (MIX IV) AND 8" ASPHALT CONCRETE BASE COURSE OR ASPHALT CONCRETE.

      (2) 6" OF CLASS "A" CONCRETE REINFORCED WITH 6"X 6" – W2.9 X W2.9 WIRE MESH ON 12" AGGREGATE SUBBASE, IF DEEMED NECESSARY BY THE ENGINEER.

   c. CHANNELIZED INTERSECTIONS ON MAJOR HIGHWAYS:

      4" ASPHALT CONCRETE (MIX IV), 8" ASPHALT CONCRETE BASE COURSE AND 12" AGGREGATE SUBBASE, OR 4" ASPHALT CONCRETE (MIX IV) AND 12" ASPHALT CONCRETE BASE COURSE OR ASPHALT CONCRETE, OR MATCH EXISTING PAVEMENT STRUCTURE, WHICHEVER IS GREATER.

6. NO MATERIAL AND/OR EQUIPMENT SHALL BE STOCKPILED OR OTHERWISE STORED WITHIN THE HIGHWAY RIGHT–OF–WAY, EXCEPT AT LOCATIONS DESIGNATED IN WRITING AND APPROVED BY THE DISTRICT ENGINEER.

7. COMPACTION TESTS SHALL BE TAKEN IN ACCORDANCE WITH THE SPECIFICATIONS FOR INSTALLATION OF MISCELLANEOUS IMPROVEMENTS WITHIN STATE HIGHWAYS, AS FOLLOWS:

   a. SUBBASE: ONE (1) COMPACTION TEST PER LIFT PER 200 LINEAL FEET OF ROADWAY.

   b. BASE COURSE: ONE (1) COMPACTION TEST PER LIFT PER 200 LINEAL FEET OF ROADWAY.

   c. ONE (1) COMPACTION TEST PER LIFT PER 300 LINEAL FEET OF TRENCH.

   d. A COPY OF THE TEST RESULTS SHALL BE SUBMITTED TO THE DISTRICT ENGINEER.

8. THE CONTRACTOR SHALL TAKE A PROFILE ALONG THE CENTERLINE OF THE PROPOSED UTILITY TRENCH BOTH BEFORE COMMENCING TRENCH EXCAVATION WORK AND AFTER TRENCH HAS BEEN REPAVED. PROFILES SHALL BE SUBMITTED TO THE DISTRICT ENGINEER AND SHALL USED TO VERIFY THE ROADWAY SURFACE HAS BEEN RESTORED TO ITS ORIGINAL CONDITION OR SMOOTHER.

9. THE CONTRACTOR SHALL PROVIDE AN ADEQUATE AND SAFE NON–SKID BRIDGING MATERIAL, INCLUDING SHORING, OVER TRENCHES IN PAVEMENT AREAS. THE BRIDGING SHALL BE ABLE TO SUPPORT ALL TYPES OF VEHICULAR TRAFFIC.

10. UNLESS OTHERWISE NOTED, NO TRENCH SHALL BE OPENED MORE THAN 300 FEET IN ADVANCE OF INSTALLED AND TESTED PIPELINE AND/OR DUCTLINE.

11. EXISTING DRAINAGE SYSTEMS SHALL BE FUNCTIONAL AT ALL TIMES.

12. THE CONTRACTOR SHALL EXERCISE CARE TO MINIMIZE DAMAGES TO EXISTING HIGHWAY IMPROVEMENTS. ALL DAMAGES SHALL BE REPAIRED BY THE CONTRACTOR, AT HIS EXPENSE, TO THE SATISFACTION OF THE DISTRICT ENGINEER.

NOTES FOR CONSTRUCTION WITHIN STATE RIGHT–OF–WAY (CONT.)

13. APPROVAL OF PERMIT CONSTRUCTION PLANS SHALL BE VALID FOR A PERIOD OF ONE (1) YEAR FROM THE DATE OF NOTIFICATION OF APPROVAL TO THE APPLICANT. IN THE EVENT CONSTRUCTION DOES NOT COMMENCE WITHIN THIS ONE–YEAR PERIOD, THE APPLICANT WILL BE REQUIRED TO RESUBMIT THE CONSTRUCTION PLANS FOR THE DIVISION'S REVIEW AND RE–APPROVAL.

14. ALL REGULATORY, GUIDE, AND CONSTRUCTION SIGNS AND BARRICADES SHALL HAVE A HIGH–INTENSITY REFLECTIVE BACKGROUND.

15. THE CONTRACTOR SHALL INFORM THE STATE HIGHWAY'S PERMIT OFFICE (873–3535) AT LEAST TWO (2) DAYS PRIOR TO CLOSING ANY LANES.

16. DRIVEWAYS SHALL BE KEPT OPEN UNLESS THE OWNERS OF THE PROPERTIES USING THESE RIGHTS–OF–WAY ARE OTHERWISE PROVIDED FOR SATISFACTORILY.

17. WHERE PEDESTRIAN WALKWAYS EXIST THEY SHALL BE MAINTAINED IN A SAFE AND PASSABLE CONDITION, OR OTHER FACILITIES FOR PEDESTRIANS SHALL BE PROVIDED. PASSAGES BETWEEN WALKWAYS AT INTERSECTIONS SHALL LIKEWISE BE PROVIDED. ALL WALKWAYS SHALL CONFORM TO ADA REQUIREMENTS.

18. THE CONTRACTOR SHALL REFERENCE, TO THE SATISFACTION OF THE DISTRICT ENGINEER, ALL EXISTING TRAFFIC SIGNS, POSTS, AND PAVEMENT MARKINGS PRIOR TO THE COMMENCEMENT OF CONSTRUCTION. THE CONTRACTOR SHALL REPLACE OR REPAIR ALL TRAFFIC SIGNS, POSTS, AND PAVEMENT MARKINGS DISTURBED BY HIS ACTIVITIES, AT HIS EXPENSE, UNLESS DIRECTED BY THE DISTRICT ENGINEER OR HIS REPRESENTATIVE.

19. THE CONTRACTOR SHALL EXERCISE CARE WHEN PERFORMING WORK IN OR ADJACENT TO THE STATE HIGHWAY RIGHT–OF–WAY. DAMAGES TO THE EXISTING FACILITIES SHALL BE IMMEDIATELY REPORTED TO THE RESPECTIVE UTILITY COMPANIES, AND/OR CITY OR STATE AGENCIES. THE REPAIR WORK SHALL BE DONE AT THE CONTRACTOR'S EXPENSE.

20. THE CONTRACTOR SHALL NOTIFY THE STATE HIGHWAYS' HIGHWAY LIGHTING SUPERVISOR (873–3535), THREE (3) WORKING DAYS PRIOR TO COMMENCING WORK.

21. TRAFFIC SIGNALS SHALL BE KEPT OPERATIONAL DURING CONSTRUCTION. TEMPORARY OPERATIONAL MICROWAVE OR OTHER APPROVED DETECTION DEVICES SHALL BE INSTALLED THREE (3) WORKING DAYS PRIOR TO ANY SIGNALIZED INTERSECTION EXCAVATION WORK. ALL WORK SHALL BE DONE IN ACCORDANCE TO THE REQUIREMENTS OF THE DEPARTMENT OF TRANSPORTATION SERVICES, CITY AND COUNTY OF HONOLULU, AND PAID FOR BY THE CONTRACTOR.

22. THE PERMIT TO PERFORM WORK UPON STATE HIGHWAY MAY BE REVOKED BECAUSE OF DEFAULT IN ANY OF THE FOLLOWING, BUT NOT LIMITED TO, CONDITIONS:

   a. WORK PERFORMED BEFORE OF AFTER PERMITTED HOURS.

   b. FAILURE TO MAINTAIN ROADWAY SURFACES IN A SMOOTH AND SAFE CONDITION.

   c. FAILURE TO CLEAN UP CONSTRUCTION DEBRIS GENERATED FROM PROJECT WORK.

   d. FAILURE TO PROVIDE PROPER TRAFFIC CONTROL.

   e. FAILURE TO REPLACE DAMAGED PAVEMENT MARKINGS AND SIGNS.

23. THE CONTRACTOR SHALL NOTIFY THE STATE HIGHWAYS PERMIT OFFICE (873–3535) AT LEAST TWO DAYS PRIOR TO PERFORMING ANY TRENCH RESTORATION WORK. THIS WORK SHALL INCLUDE ANY BACKFILLING AND COMPACTING OF TRENCH MATERIAL; ANY PLACING AND COMPACTING OF BASE COURSE MATERIAL; AND ANY PAVING OPERATIONS. ANY TRENCH RESTORATION WORK PERFORMED BY THE CONTRACTOR THAT IS NOT WITNESSED BY A STATE REPRESENTATIVE WILL BE REQUIRED TO BE REMOVED AND RESTORED WITH A STATE REPRESENTATIVE PRESENT. ALL RESTORATION WORK WILL BE AT THE CONTRACTOR'S EXPENSE.

24. TEMPORARY COLD MIX TRENCH PATCHES WILL BE PERMITTED IN ANY GIVEN AREA FOR A MAXIMUM DURATION OF TWO WEEKS, AND SHALL BE A MINIMUM OF 2 INCHES THICK. ALL TEMPORARY PATCHES SHALL BE PLACED OVER PROPERLY PLACED AND COMPACTED BACKFILL AND BASE COURSE LAYERS. CONTRACTOR SHALL BE RESPONSIBLE FOR MAINTAINING ALL TEMPORARY PATCHES AND TO MAKE REPAIRS TO UNSATISFACTORY PATCHES WITHIN 24 HOURS.

25. THE CONTRACTOR WILL MAKE EVERY EFFORT TO MINIMIZE THE USE AND THE DURATION OF USE OF STEEL PLATES. ALL STEEL PLATES SHALL HAVE A NON–SKID SURFACE. THE STATE MAY REQUIRE THE BACKFILLING AND PATCHES OF TRENCHES DUE TO THE EXCESSIVE USAGE OF STEEL PLATES.

SIGNAGE NOTES

1. THE CONTRACTOR SHALL VERIFY THE LOCATIONS AND DIMENSIONS OF EXISTING SIGNS, PANELS, SUPPORTS AND FRAMING PRIOR TO FABRICATION.

2. LETTER SIZE AND COLOR:

   A. ALL SIGNS SHALL BE IN CONFORMANCE WITH STATE OF HAWAII, DEPARTMENT OF TRANSPORTATION, COUNTY OF MAUI DEPARTMENT OF PUBLIC WORKS AND MANUAL ON UNIFORM TRAFFIC CONTROL DEVICES (MUTCD) STANDARDS.

3. ALL SIGNS SHALL CONFORM TO SECTION 630 AND 631 OF THE HAWAII STANDARD SPECIFICATIONS FOR ROAD, BRIDGE AND PUBLIC WORKS CONSTRUCTION, 2005 AND THE LATEST EDITIONS AND AMENDMENTS OF THE FOLLOWING FHWA PUBLICATIONS:

   A. "MANUAL ON UNIFORM CONTROL DEVICES (MUTCD) FOR STREETS AND HIGHWAYS", 2009

   B. "STANDARD HIGHWAY SIGNS"

   C. STANDARD ALPHABETS FOR HIGHWAY SIGNS"

4. BORDERS, MESSAGES, ARROWS, SYMBOLS AND SHIELD SHALL CONFORM TO DETAILS AS SHOWN ON THE PLANS AND AS SPECIFIED IN THE MUTCD.

5. SIGN MESSAGES SHALL BE AS INDICATED ON THE PLANS.

AustinTsutsumi & ASSOCIATES, INC.
CIVIL ENGINEERS I SURVEYORS
HONOLULU I WAILUKU I HILO, HAWAII

501 SUMNER STREET, SUITE 521
HONOLULU, HAWAII 96817

PHONE: 808-533-3646
FAX: 808-526-1267

STATE OF HAWAII
DEPARTMENT OF
HAWAIIAN HOME LANDS

PŪLEHUNUI REGIONAL INFRASTRUCTURE

AUSTIN, TSUTSUMI & ASSOC., INC.
ENGINEERS, SUVEYORS • HONOLULU, HAWAII

BRYAN H. KOBA
LICENSED PROFESSIONAL ENGINEER
No. 14948
HAWAII U.S.A.

This work was prepared by me or under my supervision and construction of this project will be under my observation. (Observation of construction as defined in Chapter 16-115 Subchapter 1 Definitions of the Hawaii Administrative Rules "Professional Engineers, Architects, Surveyors, and Landscape Architects.")

SIGNATURE APRIL 30, 2020
EXP. DATE OF THE LICENSE

0 1 2
LINE IS 2 INCHES AT FULL SIZE
(If NOT 2–inches : Scale Accordingly)

REVISION	DATE	BRIEF	BY

Project No:	16-576
Scale:	AS NOTED
Date:	1/31/2020
Designed By:	BHK
Drawn By:	BHK
Checked By:	

CONSTRUCTION NOTES – 2

DWG. NO.
G-2
SHEET 4 OF 201

FILE	POCKET	FOLDER	NO.

JOB NO. 0–11–056.004
FN: Z:\2018\18–524 (16–576 PULEHUNUI NORTH SEWER_PHASE 6.3 WASTEWATER TREATMENT FACILITY) BRYAN\DWG\G–2 CONSTRUCTION NOTES–2.DWG

ABBREVIATIONS

△	DELTA
&	AND
@	AT
A.C. OR A/C	ASPHALT CONCRETE
AD	AREA DRAIN
ADJ.	ADJUST
ARCH.	ARCHITECT
ARV	AIR RELIEF VALVE
ASSY.	ASSEMBLY
AZ	AZIMUTH
℄	BASELINE
BC	BOTTOM CURB
BCT	BREAKAWAY CABLE TERMINAL
BEG	BEGIN
BLDG.	BUILDING
BLK.	BLOCK
BOTT	BOTTOM
BVC	BEGIN VERTICAL CURVE
C	COVER
CATV	CABLE TELEVISION
C.B.	CATCH BASIN
C.C.P.	CONCRETE CYLINDER PIPE
CH	CHORD LENGTH
℄	CENTERLINE
C.I.	CAST IRON
CL.	CLASS
C.L.	CHAIN LINK
CLR.	CLEAR
CLVRT.	CULVERT
CMP	CORRUGATED METAL PIPE
CMU	CONCRETE MASONRY UNIT
CONC	CONCRETE
CONT	CONTINUATION OR CONTINUOUS
CRM	CONCRETE RUBBLE MASONRY
COL.	COLUMN
C.O.	CLEAN OUT
ø, D	DIAMETER
DBL.	DOUBLE
DET.	DETAIL
DI	DRAIN INLET
D.I.	DUCTILE IRON
DL	DRAIN LINE
DMH	DRAIN MANHOLE
DPW	DEPARTMENT OF PUBLIC WORKS
DWGS	DRAWINGS
DWY. OR D/W	DRIVEWAY
EA	EACH
EHH	ELECTRIC HANDHOLE
ELEC.	ELECTRICAL
ELEV. OR EL	ELEVATION
EQ	EQUAL
EXIST.	EXISTING
EP	EDGE OF PAVEMENT OR ELECTRIC POLE
EVC	END VERTICAL CURVE
F&C	FRAME & COVER
FFE	FINISH FLOOR ELEVATION
FH	FIRE HYDRANT
FIN	FINISHED
FL	FLOW LINE
FT	FEET
GA	GUY ANCHOR
G.D.I.	GRATED DROP INLET
G.I.	GALVANIZED IRON
GRD.	GRADE
GRP	GROUTED RUBBLE PAVING
G.V.	GATE VALVE
HT/HTCO	HAWAIIAN TELEPHONE CO.
HT.	HEIGHT
HB	HOSE BIBB
HGL	HYDRAULIC GRADE LINE
HORIZ	HORIZONTAL
HP	HIGH POINT
INTER.	INTERSECTION
INV	INVERT ELEVATION
LAT.	LATERAL
LC	LENGTH OF CURVE
LEN	LENGTH
LF	LINEAL FEET
LP	LIGHT POLE
LP	LOW POINT
LT	LEFT
MAX	MAXIMUM
MB	MAILBOX
MECH.	MECHANICAL
MECO	MAUI ELECTRIC CO.
MH	MANHOLE
MON	MONUMENT
NO.	NUMBER
O.C.	ON CENTER
O.D.	OUTSIDE DIAMETER
O/S	OFFSET
PAV'T	PAVEMENT
PC	POINT OF CURVATURE
PCC	POINT OF COMPOUND CURVE
PED	PEDESTRIAN
PI	POINT OF INTERSECTION
PIVC	POINT OF INTERSECTION ON VERTICAL CURVE
PL.	PLACE
ℙ	PROPERTY LINE
PP	POWER POLE
PT	POINT OF TANGENCY
PVC	POLYVINYL CHLORIDE
R	RADIUS
R.C.	REINFORCED CONCRETE
RCP	REINFORCED CONCRETE PIPE
RD.	ROAD
REFL.	REFLECTOR
REINF.	REINFORCED OR REINFORCEMENT
RET.	RETENTION
RP	RADIUS POINT
RT	RIGHT
R.O.W. OR R/W	RIGHT-OF-WAY
S	SLOPE
SDMH	STORM DRAIN MANHOLE
Se	SUPER ELEVATION
SDOT	HAWAII STATE DEPT. OF TRANSPORATION
SF	SQUARE FOOT
SHT	SHEET
SPR.	SPRINKLER
ST.	STREET
STA	STATION
STD	STANDARD
STRUCT.	STRUCTURE
SVC.	SERVICE
S/W	SIDEWALK
T	TANGENT
TBOX	TELEPHONE BOX
TC	TOP CURB
TEL	TELEPHONE
TEMP	TEMPORARY
THH	TELEPHONE HANDHOLE
THK.	THICK
TM	TRANSMISSION MAIN
TRAV.	TRAVERSE
TW	TOP WALL
TYP	TYPICAL
VB	VALVE BOX
V.C.	VERTICAL CURVE
VEH.	VEHICLE
VERT	VERTICAL
VPI	VERTICAL POINT OF INTERSECTION
W	WIDE
W/	WITH
W/L OR WL	WATER LINE
WM	WATER METER
WV	WATER VALVE

LEGEND

1 / M1	SECTION DESIGNATION EX: SECTION 1 REFERENCED ON DWG. M1
A / C5	DETAIL DESIGNATION EX: DETAIL A REFERENCED ON DWG. C5
	CONCRETE
	GRAVEL FILL
	CONCRETE MASONRY
	EARTH
	PORTION OMITTED
X	FENCE
x7.00	EXIST. GRADE SPOT ELEVATION
7.00	FINISH GRADE SPOT ELEVATION
	FINISH GRADE
	WATER LEVEL
	PROPERTY LINE
W6	WATER LINE WITH SIZE
D12	DRAIN LINE WITH SIZE
S4	SEWER LINE WITH SIZE
FM42	SEWER FORCE MAIN WITH SIZE
ts	TRAFFIC SIGNAL CONDUIT
ts/fo	TRAFFIC SIGNAL/FIBER OPTIC CONDUIT
O/H	OVER HEAD ELECTRICAL LINE
G2	GAS LINE WITH SIZE
FIBEROPTIC	BURIED FIBER OPTIC CABLES

AustinTsutsumi
& ASSOCIATES, INC.
CIVIL ENGINEERS I SURVEYORS
HONOLULU I WAILUKU I HILO, HAWAII

501 SUMNER STREET, SUITE 521
HONOLULU, HAWAII 96817

PHONE: 808-533-3646
FAX: 808-526-1267

STATE OF HAWAII
DEPARTMENT OF
HAWAIIAN HOME LANDS

PŪLEHUNUI
REGIONAL
INFRASTRUCTURE

AUSTIN, TSUTSUMI & ASSOC., INC.
ENGINEERS, SURVEYORS • HONOLULU, HAWAII

BRYAN H. KOBA
LICENSED PROFESSIONAL ENGINEER
No. 14948
HAWAII U.S.A.

This work was prepared by me or under my supervision and construction of this project will be under my observation. (Observation of construction as defined in Chapter 16-115 Subchapter 1 Definitions of the Hawaii Administrative Rules "Professional Engineers, Architects, Surveyors, and Landscape Architects.")

SIGNATURE APRIL 30, 2020
EXP. DATE OF THE LICENSE

0 1 2
LINE IS 2 INCHES AT FULL SIZE
(If NOT 2-inches : Scale Accordingly)

REVISION	DATE	BRIEF	BY

Project No:	16-576
Scale:	AS NOTED
Date:	1/31/2020
Designed By:	BHK
Drawn By:	BHK
Checked By:	

CONSTRUCTION NOTES – 3
ABBREVIATIONS AND
SYMBOLS

DWG. NO.
G-3

SHEET 5 OF 201

FILE	POCKET	FOLDER	NO.

JOB NO. 0-11-056.004
FN: Z:\2018\18-524 (16-576 PULEHUNUI NORTH SEWER_PHASE 6.3 WASTEWATER TREATMENT FACILITY) BRYAN\DWG\G-3 ABBREVIATIONS AND SYMBOLS.DWG

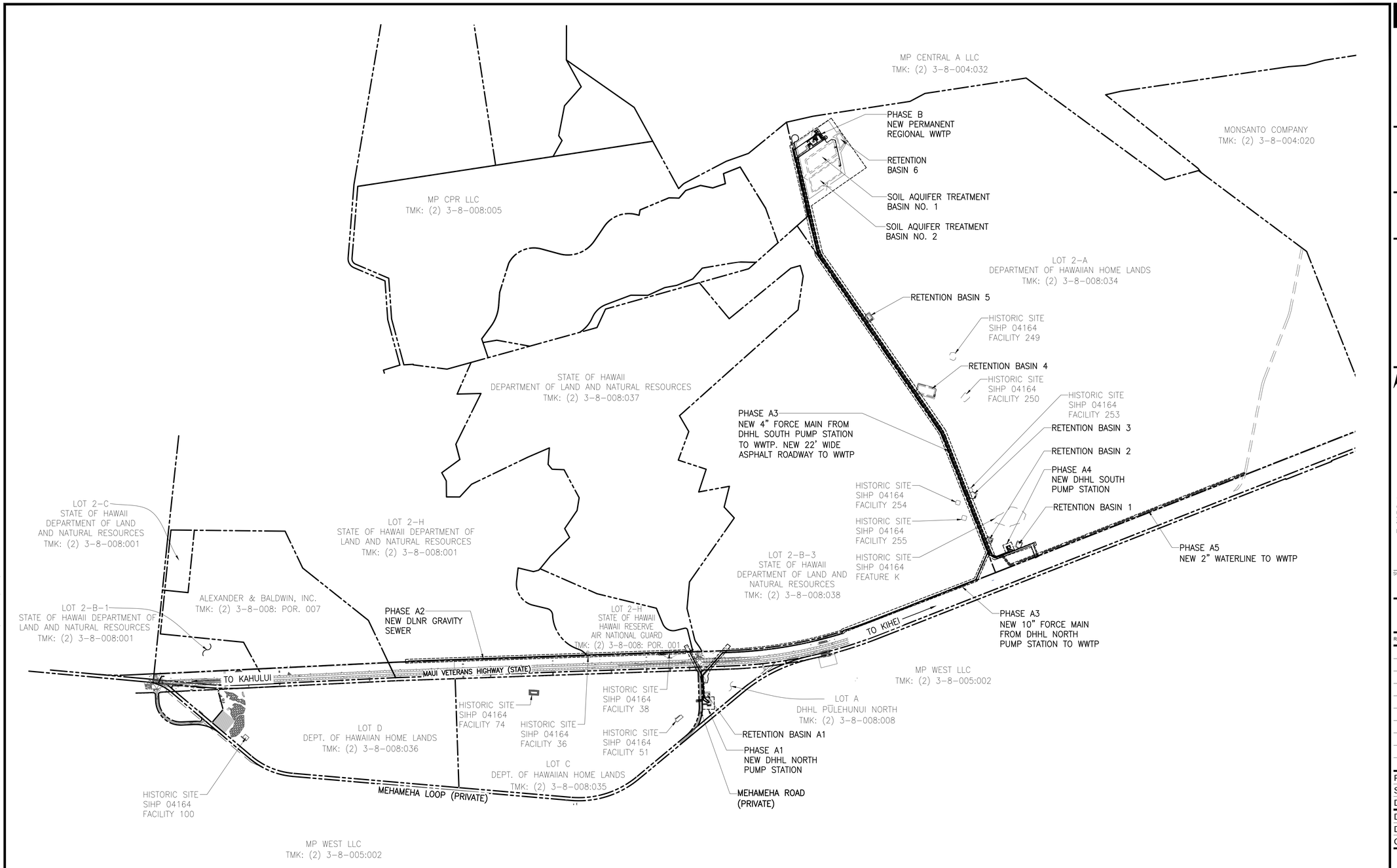

OVERALL PROJECT PLAN

SCALE: 1"=600'

AustinTsutsumi
& ASSOCIATES, INC.
CIVIL ENGINEERS I SURVEYORS
HONOLULU I WAILUKU I HILO, HAWAII

501 SUMNER STREET, SUITE 521
HONOLULU, HAWAII 96817

PHONE: 808-533-3646
FAX: 808-526-1267

STATE OF HAWAII
DEPARTMENT OF
HAWAIIAN HOME LANDS

PŪLEHUNUI
REGIONAL
INFRASTRUCTURE

AUSTIN, TSUTSUMI & ASSOC., INC.
ENGINEERS, SURVEYORS • HONOLULU, HAWAII

BRYAN H. KOBA
LICENSED PROFESSIONAL ENGINEER
No. 14948
HAWAII U.S.A.

This work was prepared by me or under my supervision and construction of this project will be under my observation. (Observation of construction as defined in Chapter 16-115 Subchapter 1 Definitions of the Hawaii Administrative Rules "Professional Engineers, Architects, Surveyors, and Landscape Architects.")

SIGNATURE APRIL 30, 2020
EXP. DATE OF THE LICENSE

0 1 2
LINE IS 2 INCHES AT FULL SIZE
(if NOT 2-inches : Scale Accordingly)

REVISION	DATE	BRIEF	BY

Project No:	16-576
Scale:	AS NOTED
Date:	1/31/2020
Designed By:	BHK
Drawn By:	BHK
Checked By:	

OVERALL PROJECT PLAN

DWG. NO.
G-4

SHEET 6 OF 201

FILE	POCKET	FOLDER	NO.

JOB NO. 0-11-056.004
FN: Z:\2018\18-524 (16-576 PULEHUNUI NORTH SEWER_PHASE 6.3 WASTEWATER TREATMENT FACILITY) BRYAN\DWG\G-4 OVERALL PROJECT PLAN.DWG

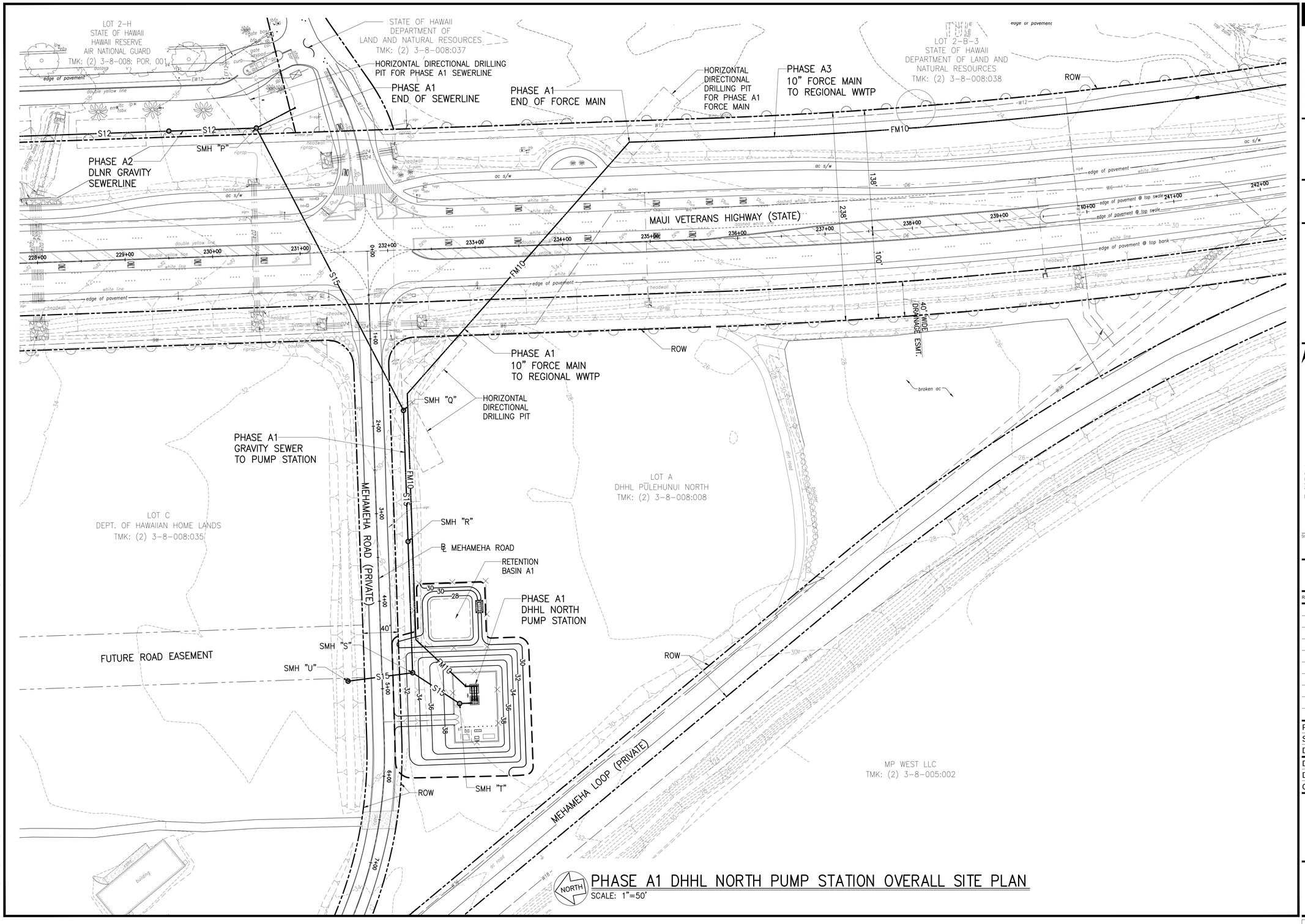

PHASE A1 DHHL NORTH PUMP STATION OVERALL SITE PLAN

SCALE: 1"=50'

AustinTsutsumi
& ASSOCIATES, INC.
CIVIL ENGINEERS I SURVEYORS
HONOLULU I WAILUKU I HILO, HAWAII

501 SUMNER STREET, SUITE 521
HONOLULU, HAWAII 96817

PHONE: 808-533-3646
FAX: 808-526-1267

STATE OF HAWAII
DEPARTMENT OF
HAWAIIAN HOME LANDS

PŪLEHUNUI REGIONAL INFRASTRUCTURE

AUSTIN, TSUTSUMI & ASSOC., INC.
ENGINEERS, SURVEYORS • HONOLULU, HAWAII

BRYAN H. KOBA
LICENSED PROFESSIONAL ENGINEER
No. 14948
HAWAII U.S.A.

This work was prepared by me or under my supervision and construction of this project will be under my observation. (Observation of construction as defined in Chapter 16-115 Subchapter 1 Definitions of the Hawaii Administrative Rules "Professional Engineers, Architects, Surveyors, and Landscape Architects.")

SIGNATURE APRIL 30, 2020 EXP. DATE OF THE LICENSE

0 1 2
LINE IS 2 INCHES AT FULL SIZE
(IF NOT 2-inches , Scale Accordingly)

REVISION	DATE	BRIEF	BY

Project No:	16-576
Scale:	AS NOTED
Date:	1/31/2020
Designed By:	BHK
Drawn By:	BHK
Checked By:	

PHASE A1 DHHL
NORTH PUMP STATION
OVERALL SITE PLAN

DWG. NO.
CA1-1

SHEET 7 OF 201

FILE	POCKET	FOLDER	NO.

JOB NO. 0-11-056.004
FN: Z:\2018\18-524 (16-576 PULEHUNUI NORTH SEWER_PHASE 6.3 WASTEWATER TREATMENT FACILITY) BRYAN\DWG\CA1-1 PHASE A1 DHHL NORTH PUMP STATION OVERALL SITE PLAN .DWG

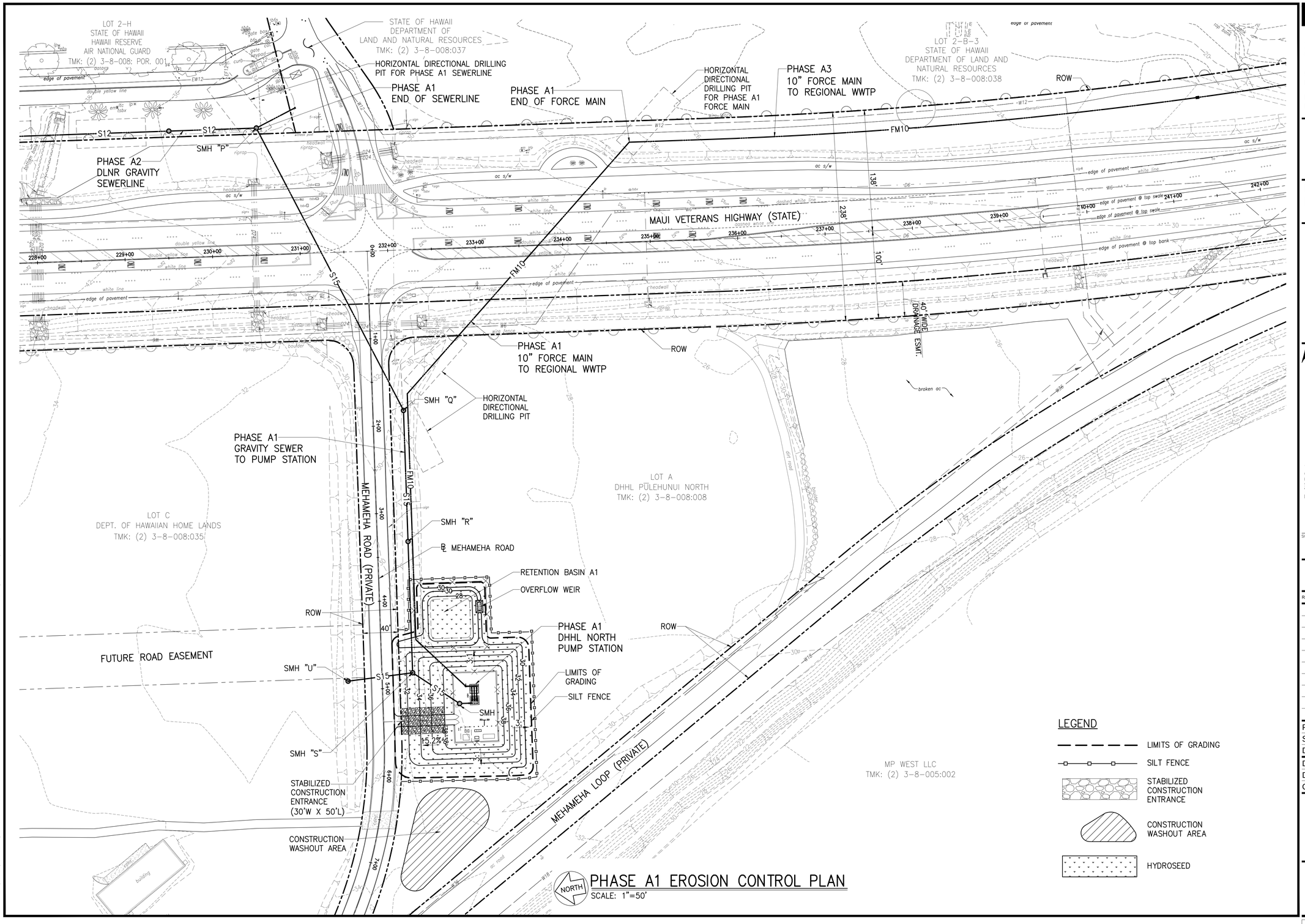

PHASE A1 EROSION CONTROL PLAN

SCALE: 1"=50'

LEGEND

- LIMITS OF GRADING
- SILT FENCE
- STABILIZED CONSTRUCTION ENTRANCE
- CONSTRUCTION WASHOUT AREA
- HYDROSEED

AustinTsutsumi
& ASSOCIATES, INC.
CIVIL ENGINEERS I SURVEYORS
HONOLULU I WAILUKU I HILO, HAWAII

501 SUMNER STREET, SUITE 521
HONOLULU, HAWAII 96817

PHONE: 808-533-3646
FAX: 808-526-1267

STATE OF HAWAII
DEPARTMENT OF
HAWAIIAN HOME LANDS

PŪLEHUNUI REGIONAL INFRASTRUCTURE

AUSTIN, TSUTSUMI & ASSOC., INC.
ENGINEERS, SURVEYORS • HONOLULU, HAWAII

BRYAN H. KOBA
LICENSED PROFESSIONAL ENGINEER
No. 14948
HAWAII U.S.A.

This work was prepared by me or under my supervision and construction of this project will be under my observation. (Observation of construction as defined in Chapter 16-115 Subchapter 1 Definitions of the Hawaii Administrative Rules "Professional Engineers, Architects, Surveyors, and Landscape Architects.")

SIGNATURE — APRIL 30, 2020 — EXP. DATE OF THE LICENSE

0 1 2
LINE IS 2 INCHES AT FULL SIZE
(IF NOT 2-inches , Scale Accordingly)

REVISION	DATE	BRIEF	BY

Project No:	16-576
Scale:	AS NOTED
Date:	1/31/2020
Designed By:	BHK
Drawn By:	BHK
Checked By:	

PHASE A1 EROSION CONTROL PLAN

DWG. NO.

CA1-2

SHEET 8 OF 201

FILE	POCKET	FOLDER	NO.

JOB NO. 0-11-056.004
FN: Z:\2018\18-524 (16-576 PULEHUNUI NORTH SEWER_PHASE 6.3 WASTEWATER TREATMENT FACILITY) BRYAN\DWG\CA1-2 PHASE A1 EROSION CONTROL PLAN.DWG

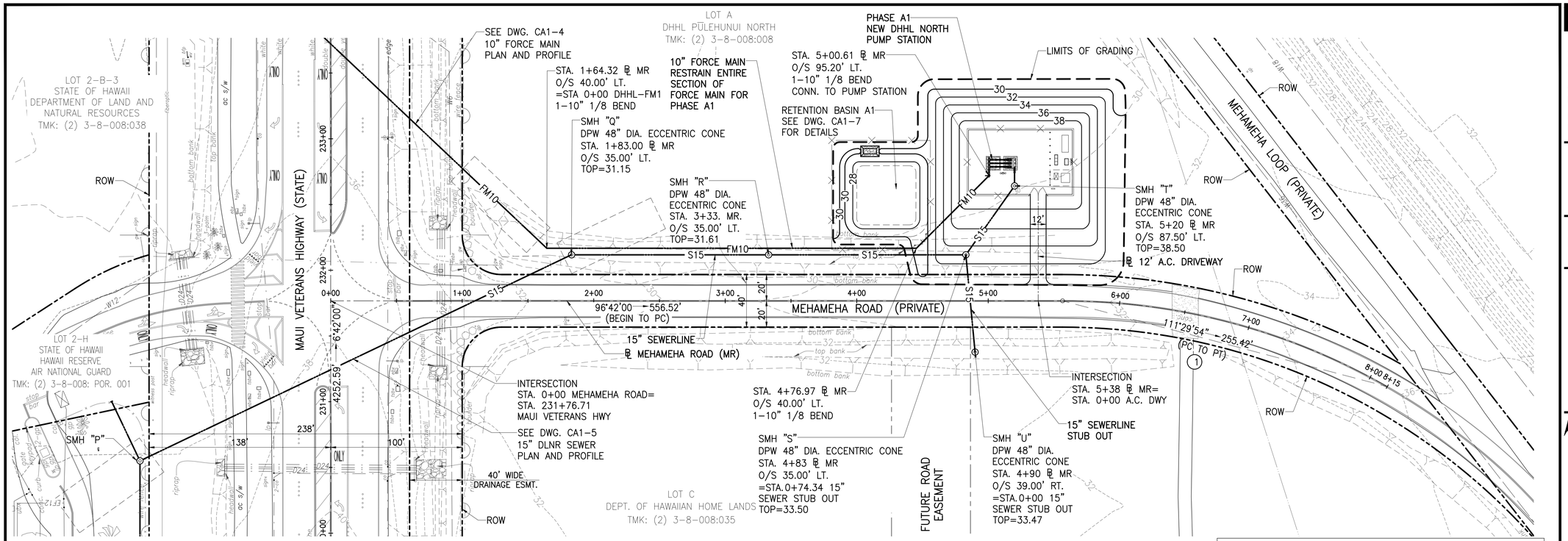

PLAN – MEHAMEHA ROAD STA. 0+00 TO END

SCALE: 1"=40'

CURVE DATA						
Curve #	Δ	Δ/2	R	T	Ch	Lc
1	29°35'47"	14°47'54"	500.00'	132.09'	255.42'	258.28'

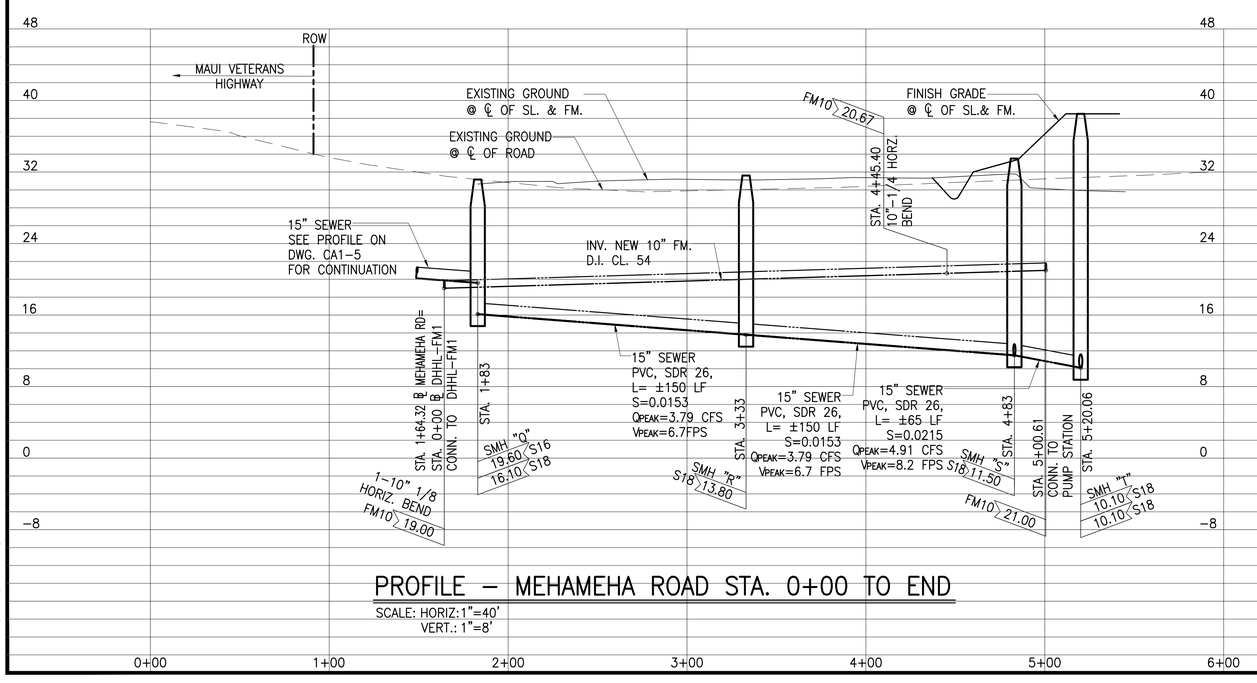

PROFILE – MEHAMEHA ROAD STA. 0+00 TO END

SCALE: HORIZ:1"=40'
VERT.: 1"=8'

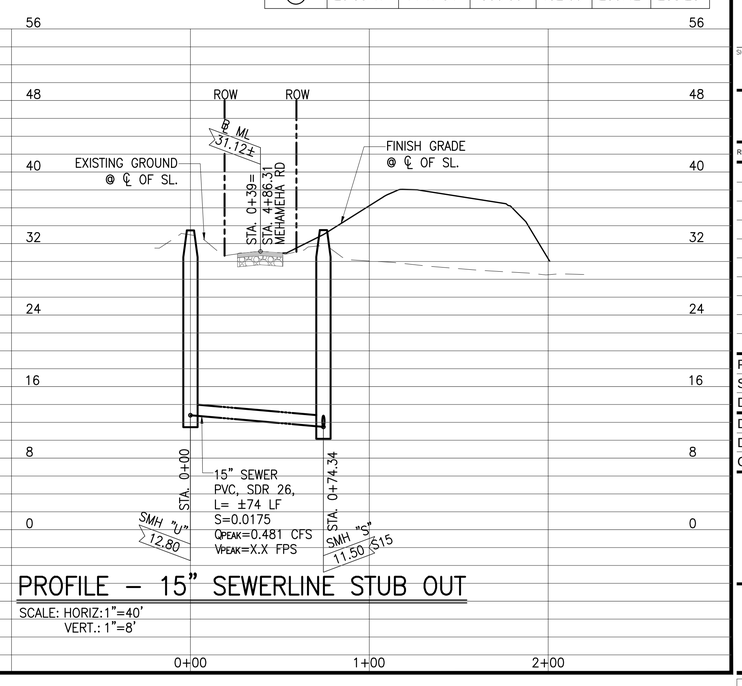

PROFILE – 15" SEWERLINE STUB OUT

SCALE: HORIZ:1"=40'
VERT.: 1"=8'

AustinTsutsumi
& ASSOCIATES, INC.
CIVIL ENGINEERS I SURVEYORS
HONOLULU I WAILUKU I HILO, HAWAII

501 SUMNER STREET, SUITE 521
HONOLULU, HAWAII 96817

PHONE: 808-533-3646
FAX: 808-526-1267

STATE OF HAWAII
DEPARTMENT OF
HAWAIIAN HOME LANDS

PŪLEHUNUI
REGIONAL
INFRASTRUCTURE

AUSTIN, TSUTSUMI & ASSOC., INC.
ENGINEERS, SURVEYORS • HONOLULU, HAWAII

BRYAN H. KOBA
LICENSED PROFESSIONAL ENGINEER
No. 14948
HAWAII U.S.A.

This work was prepared by me or under my supervision and construction of this project will be under my observation. (Observation of construction as defined in Chapter 16-115 Subchapter 1 Definitions of the Hawaii Administrative Rules "Professional Engineers, Architects, Surveyors, and Landscape Architects.")

SIGNATURE APRIL 30, 2020
EXP. DATE OF THE LICENSE

0 1 2
LINE IS 2 INCHES AT FULL SIZE
(If NOT 2-inches : Scale Accordingly)

REVISION	DATE	BRIEF	BY

Project No:	16-576
Scale:	AS NOTED
Date:	1/31/2020
Designed By:	BHK
Drawn By:	BHK
Checked By:	

PLAN AND PROFILE
MEHAMEHA ROAD
STA 0+00 TO END

DWG. NO.
CA1-3

SHEET 9 OF 201

FILE	POCKET	FOLDER	NO.

JOB NO. 0-11-056.004
FN: Z:\2018\18-524 (16-576 PULEHUNUI NORTH SEWER_PHASE 6.3 WASTEWATER TREATMENT FACILITY) BRYAN\DWG\CA1-3 PP MEHAMEHA RD STA 0+00 TO END.DWG

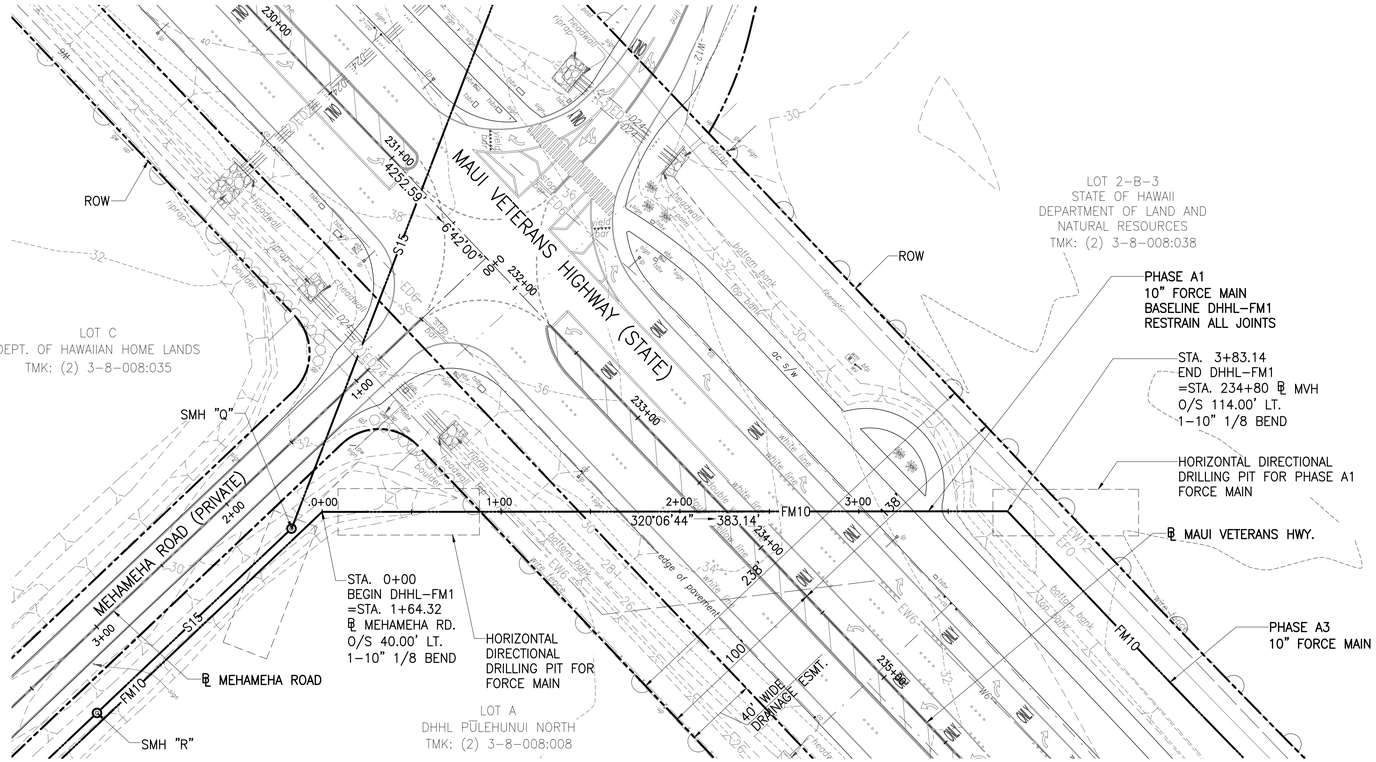

PLAN – DHHL-FM1 STA. 0+00 TO END

SCALE: 1"=40'

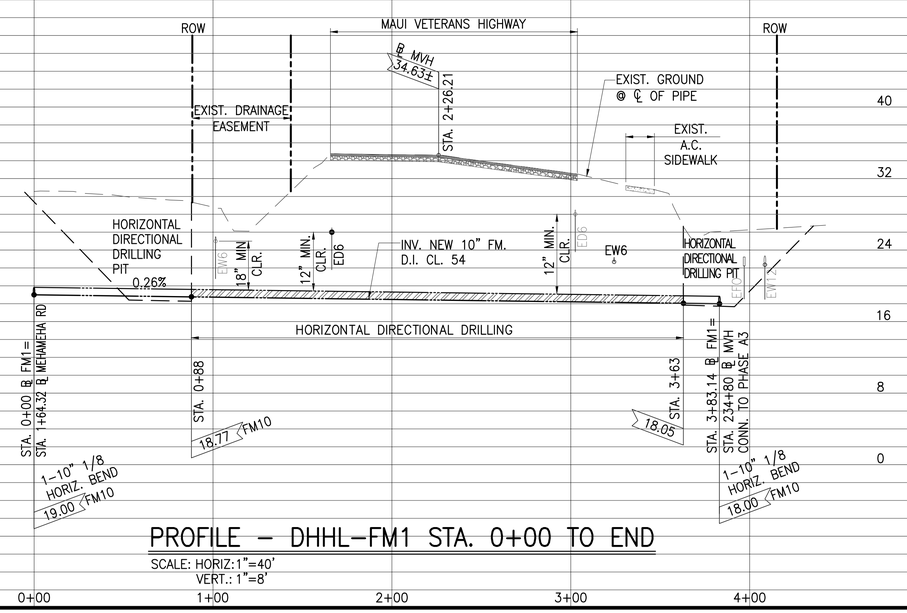

PROFILE – DHHL-FM1 STA. 0+00 TO END

SCALE: HORIZ:1"=40'
VERT.: 1"=8'

AustinTsutsumi
& ASSOCIATES, INC.
CIVIL ENGINEERS I SURVEYORS
HONOLULU I WAILUKU I HILO, HAWAII

501 SUMNER STREET, SUITE 521
HONOLULU, HAWAII 96817

PHONE: 808-533-3646
FAX: 808-526-1267

STATE OF HAWAII
DEPARTMENT OF
HAWAIIAN HOME LANDS

PŪLEHUNUI
REGIONAL
INFRASTRUCTURE

AUSTIN, TSUTSUMI & ASSOC., INC.
ENGINEERS, SURVEYORS • HONOLULU, HAWAII

BRYAN H. KOBA
LICENSED PROFESSIONAL ENGINEER
No. 14948
HAWAII U.S.A.

This work was prepared by me or under my supervision and construction of this project will be under my observation. (Observation of construction as defined in Chapter 16-115 Subchapter 1 Definitions of the Hawaii Administrative Rules "Professional Engineers, Architects, Surveyors, and Landscape Architects.")

SIGNATURE — APRIL 30, 2020 EXP. DATE OF THE LICENSE

0 1 2
LINE IS 2 INCHES AT FULL SIZE
(If NOT 2-inches : Scale Accordingly)

REVISION	DATE	BRIEF	BY

Project No:	16-576
Scale:	AS NOTED
Date:	1/31/2020
Designed By:	BHK
Drawn By:	BHK
Checked By:	

PLAN AND PROFILE DHHL-FM1 STA 0+00 TO END

DWG. NO.

CA1-4

SHEET 10 OF 201

FILE	POCKET	FOLDER	NO.

JOB NO. 0-11-056.004
FN: Z:\2018\18-524 (16-576 PULEHUNUI NORTH SEWER_PHASE 6.3 WASTEWATER TREATMENT FACILITY) BRYAN\DWG\CA1-4 PP DHHL-FM1 STA 0+00 TO END.DWG

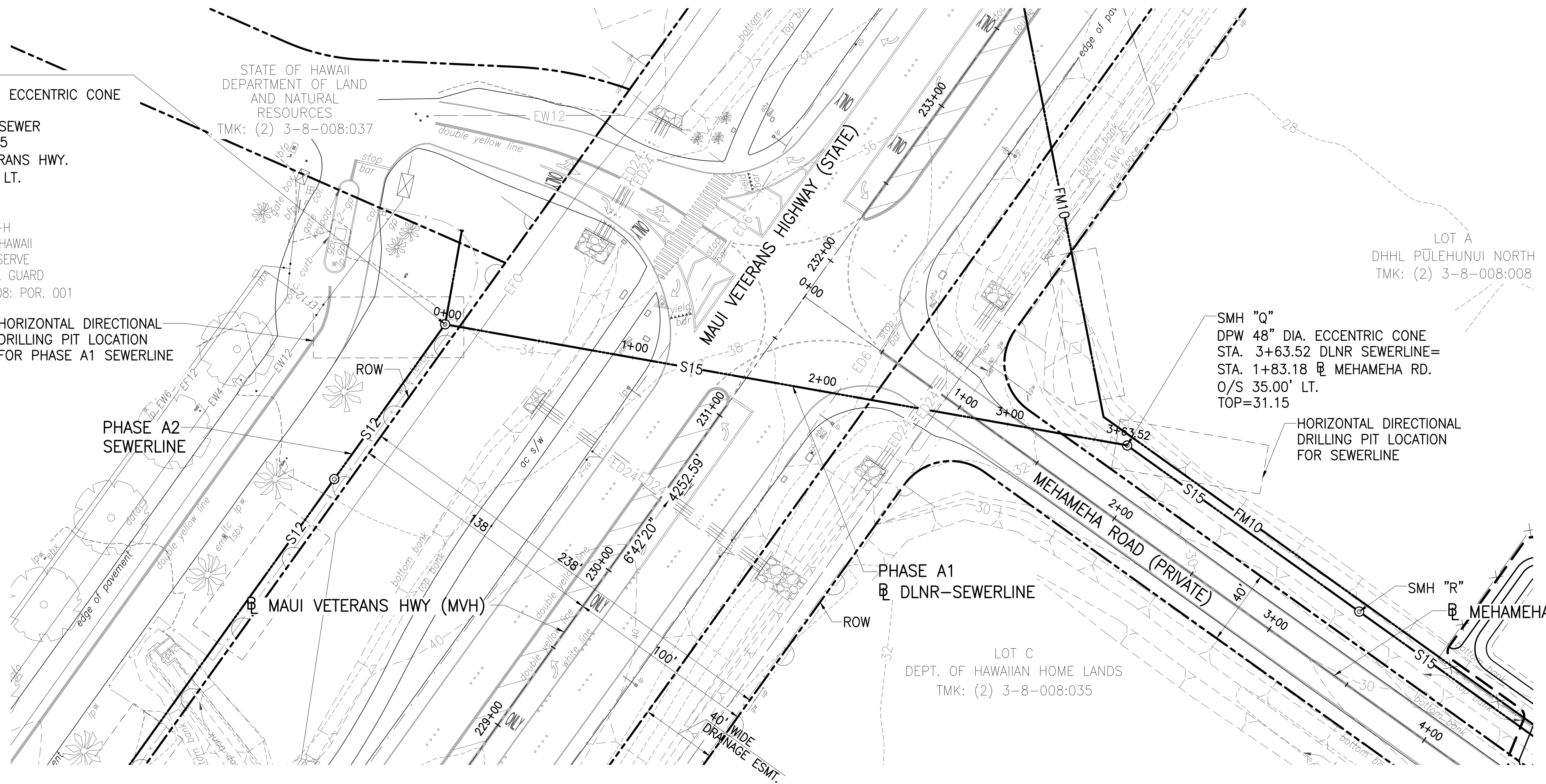

PLAN – DLNR SEWER STA. 0+00 TO END

SCALE: 1"=40'

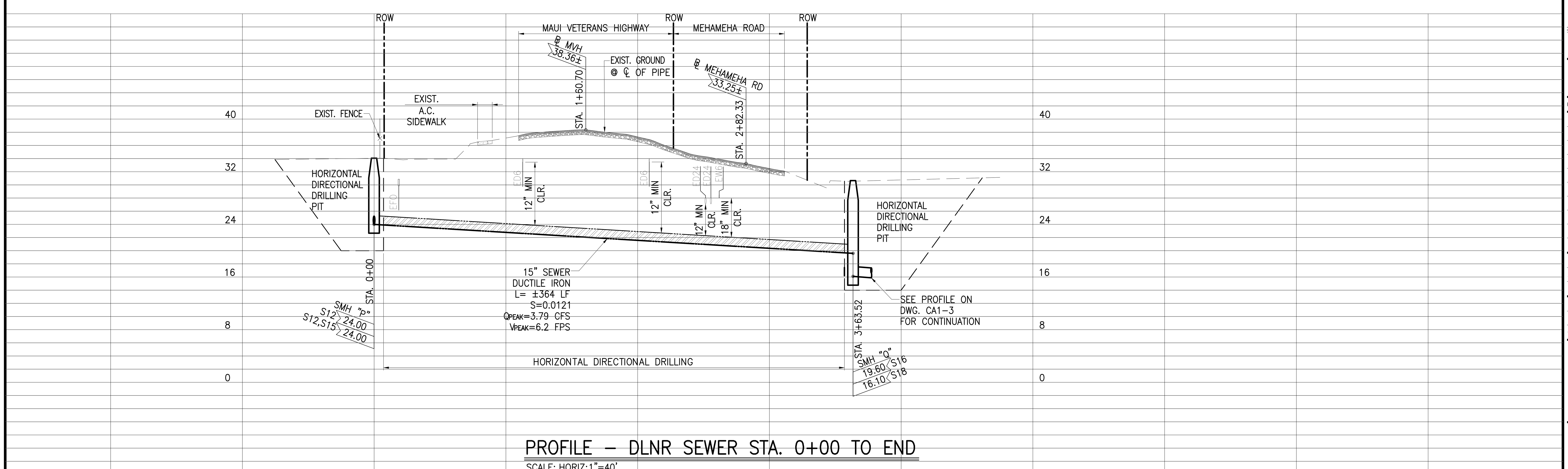

PROFILE – DLNR SEWER STA. 0+00 TO END

SCALE: HORIZ:1"=40'
VERT.: 1"=8'

NOTES:

1. CONTRACTOR TO PROVIDE INGRESS/EGRESS RE-ROUTING IN HAWAII RESERVE AIR NATIONAL GUARD PROPERTY IF HORIZONTAL DIRECTIONAL DRILLING PIT ENCROACHES INTO EXIST. ROADWAY.
2. CONTRACTOR SHALL EXERCISE EXTREME CAUTION WHILE EXCAVATING FOR THE DRILLING PIT AND SEWERLINE IN HAWAII RESERVE AIR NATIONAL GUARD PROPERTY. ANY DAMAGE TO EXISTING UTILITIES SHALL BE REPAIRED AT THE CONTRACTOR'S EXPENSE.
3. CONTRACTOR TO COORDINATE WITH HAWAII RESERVE AIR NATIONAL GUARD REGARDING ACCESS DURING CONSTRUCTION.
4. CONTRACTOR TO REPLACE LANDSCAPING AND IRRIGATION DISTURBED DURING CONSTRUCTION.

AustinTsutsumi
& ASSOCIATES, INC.
CIVIL ENGINEERS I SURVEYORS
HONOLULU I WAILUKU I HILO, HAWAII
501 SUMNER STREET, SUITE 521
HONOLULU, HAWAII 96817
PHONE: 808-533-3646
FAX: 808-526-1267

STATE OF HAWAII
DEPARTMENT OF
HAWAIIAN HOME LANDS

PŪLEHUNUI
REGIONAL
INFRASTRUCTURE

AUSTIN, TSUTSUMI & ASSOC., INC.
ENGINEERS, SUVEYORS • HONOLULU, HAWAII

BRYAN H. KOBA
LICENSED PROFESSIONAL ENGINEER
No. 14948
HAWAII U.S.A.

This work was prepared by me or under my supervision and construction of this project will be under my observation. (Observation of construction as defined in Chapter 16-115 Subchapter 1 Definitions of the Hawaii Administrative Rules "Professional Engineers, Architects, Surveyors, and Landscape Architects.")

SIGNATURE APRIL 30, 2020
EXP. DATE OF THE LICENSE

0 1 2
LINE IS 2 INCHES AT FULL SIZE
(If NOT 2-inches : Scale Accordingly)

REVISION	DATE	BRIEF	BY

Project No:	16-576
Scale:	AS NOTED
Date:	1/31/2020
Designed By:	BHK
Drawn By:	BHK
Checked By:	

PLAN AND PROFILE
DLNR SEWER STA 0+00
TO END

DWG. NO.
CA1-5

SHEET 11 OF 201

FILE	POCKET	FOLDER	NO.

JOB NO. 0-11-056.004
FN: Z:\2018\18-524 (16-576 PULEHUNUI NORTH SEWER_PHASE 6.3 WASTEWATER TREATMENT FACILITY) BRYAN\DWG\CA1-5 PP DLNR SEWER STA 0+00 TO END.DWG

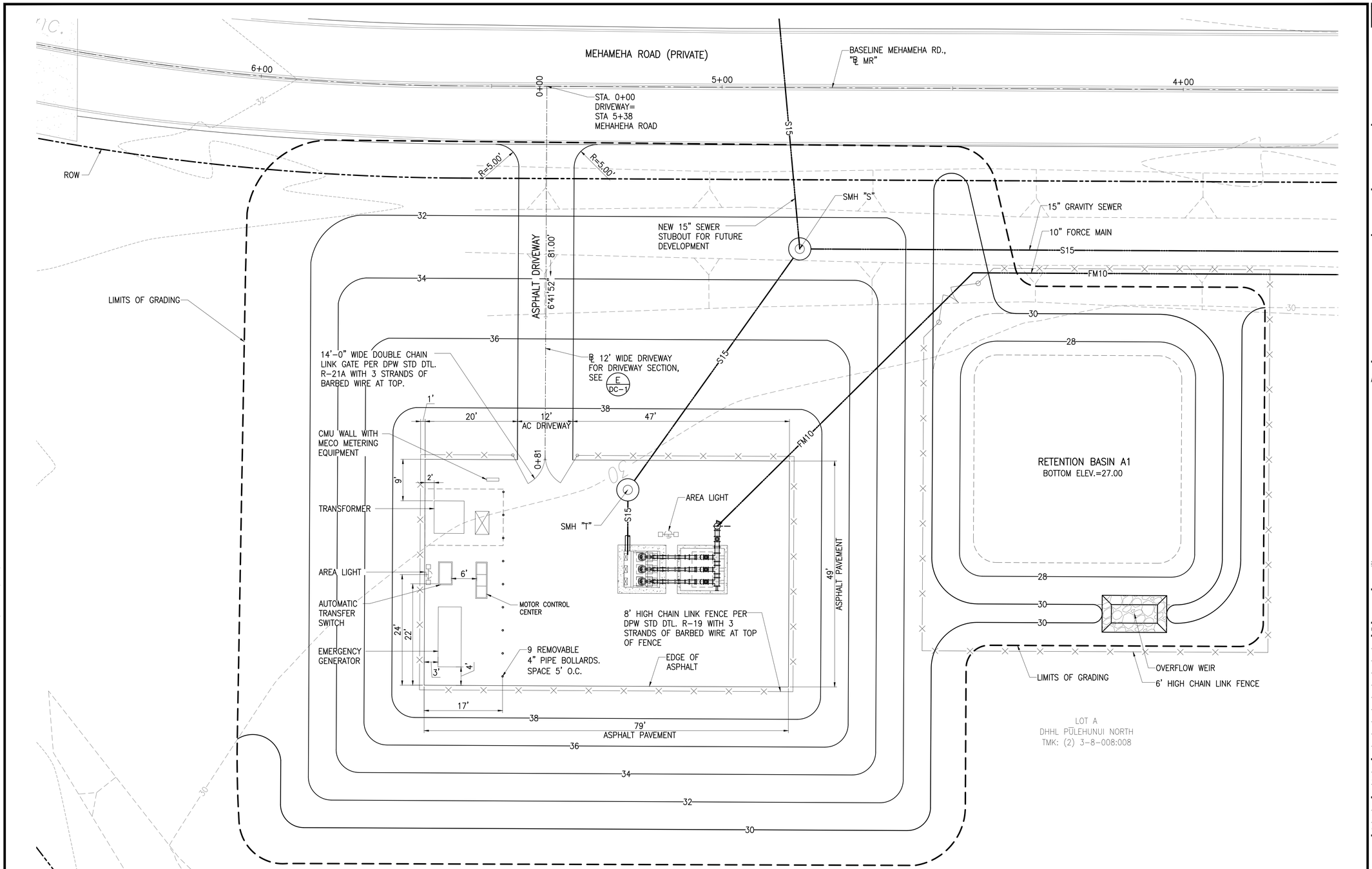

DHHL NORTH PUMP STATION SITE PLAN

SCALE: 1"=10'

AustinTsutsumi & ASSOCIATES, INC.
CIVIL ENGINEERS I SURVEYORS
HONOLULU I WAILUKU I HILO, HAWAII

501 SUMNER STREET, SUITE 521
HONOLULU, HAWAII 96817

PHONE: 808-533-3646
FAX: 808-526-1267

STATE OF HAWAII
DEPARTMENT OF HAWAIIAN HOME LANDS

PŪLEHUNUI REGIONAL INFRASTRUCTURE

AUSTIN, TSUTSUMI & ASSOC., INC.
ENGINEERS, SURVEYORS • HONOLULU, HAWAII

BRYAN H. KOBA
LICENSED PROFESSIONAL ENGINEER
No. 14948
HAWAII U.S.A.

This work was prepared by me or under my supervision and construction of this project will be under my observation. (Observation of construction as defined in Chapter 16-115 Subchapter 1 Definitions of the Hawaii Administrative Rules "Professional Engineers, Architects, Surveyors, and Landscape Architects.")

SIGNATURE — APRIL 30, 2020 EXP. DATE OF THE LICENSE

0 1 2
LINE IS 2 INCHES AT FULL SIZE
(If NOT 2-inches : Scale Accordingly)

REVISION	DATE	BRIEF	BY

Project No:	16-576
Scale:	AS NOTED
Date:	1/31/2020
Designed By:	BHK
Drawn By:	BHK
Checked By:	

DHHL NORTH PUMP STATION SITE PLAN

DWG. NO.

CA1-6

SHEET 12 OF 201

FILE	POCKET	FOLDER	NO.

JOB NO. 0-11-056.004
FN: Z:\2018\18-524 (16-576 PULEHUNUI NORTH SEWER_PHASE 6.3 WASTEWATER TREATMENT FACILITY) BRYAN\DWG\CA1-6 DHHL NORTH PUMP STATION SITE PLAN.DWG

ESTIMATED PHASE A1 EARTHWORK SUMMARY:

AREA OF CLEARING, GRUBBING AND GRADING: 0.68 ACRES

EXCAVATION VOLUME:	270.00	CU. YD.
EMBANKMENT VOLUME:	4,020.00	CU. YD.
NET VOLUME:	3,750.00	CU. YD. (FILL)

NOTE:
THE ABOVE QUANTITIES ARE RAW QUANTITIES AND DO NOT ACCOUNT FOR SHRINKAGE OR CONSOLIDATION.

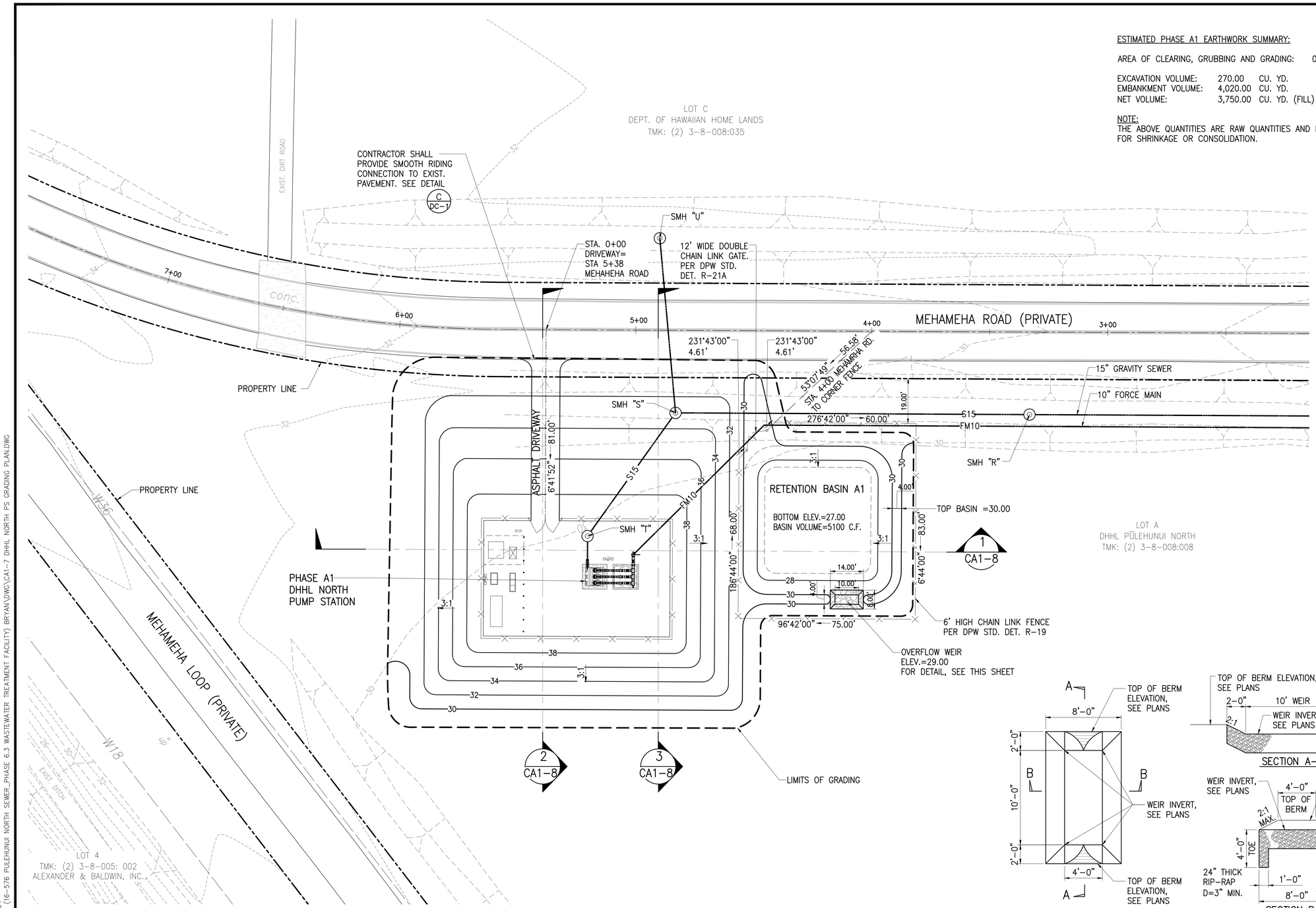

DHHL NORTH PUMP STATION GRADING PLAN

SCALE: 1"=20'

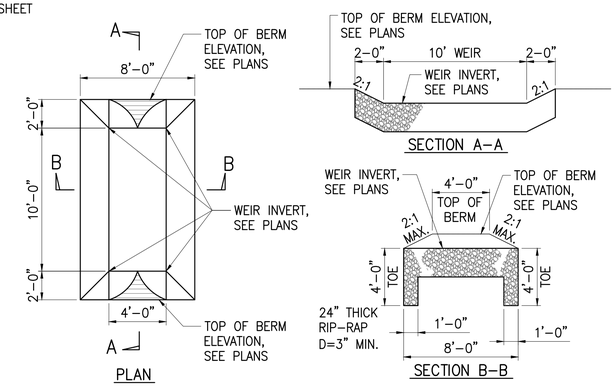

OVERFLOW WEIR DETAIL

NOT TO SCALE

AustinTsutsumi & ASSOCIATES, INC.
CIVIL ENGINEERS I SURVEYORS
HONOLULU I WAILUKU I HILO, HAWAII

501 SUMNER STREET, SUITE 521
HONOLULU, HAWAII 96817

PHONE: 808-533-3646
FAX: 808-526-1267

STATE OF HAWAII
DEPARTMENT OF HAWAIIAN HOME LANDS

PŪLEHUNUI REGIONAL INFRASTRUCTURE

AUSTIN, TSUTSUMI & ASSOC., INC.
ENGINEERS, SURVEYORS • HONOLULU, HAWAII

BRYAN H. KOBA
LICENSED PROFESSIONAL ENGINEER
No. 14948
HAWAII U.S.A.

This work was prepared by me or under my supervision and construction of this project will be under my observation. (Observation of construction as defined in Chapter 16-115 Subchapter 1 Definitions of the Hawaii Administrative Rules "Professional Engineers, Architects, Surveyors, and Landscape Architects.")

SIGNATURE APRIL 30, 2020
EXP. DATE OF THE LICENSE

0 1 2
LINE IS 2 INCHES AT FULL SIZE
(If NOT 2-inches : Scale Accordingly)

REVISION	DATE	BRIEF	BY

Project No:	16-576
Scale:	AS NOTED
Date:	1/31/2020
Designed By:	BHK
Drawn By:	BHK
Checked By:	

DHHL NORTH PUMP STATION GRADING PLAN

DWG. NO.
CA1-7

SHEET 13 OF 201

FILE	POCKET	FOLDER	NO.

JOB NO. 0-11-056.004
FN: Z:\2018\18-524 (16-576 PULEHUNUI NORTH SEWER_PHASE 6.3 WASTEWATER TREATMENT FACILITY) BRYAN\DWG\CA1-7 DHHL NORTH PS GRADING PLAN.DWG

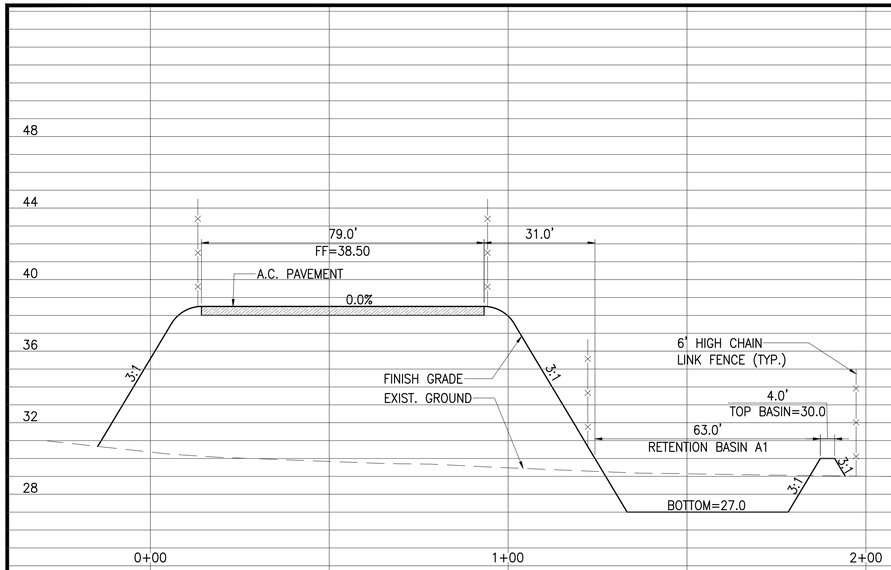

1 CA-8 SECTION "1"
SCALE: HORIZ:1"=20'
VERT.: 1"=4'

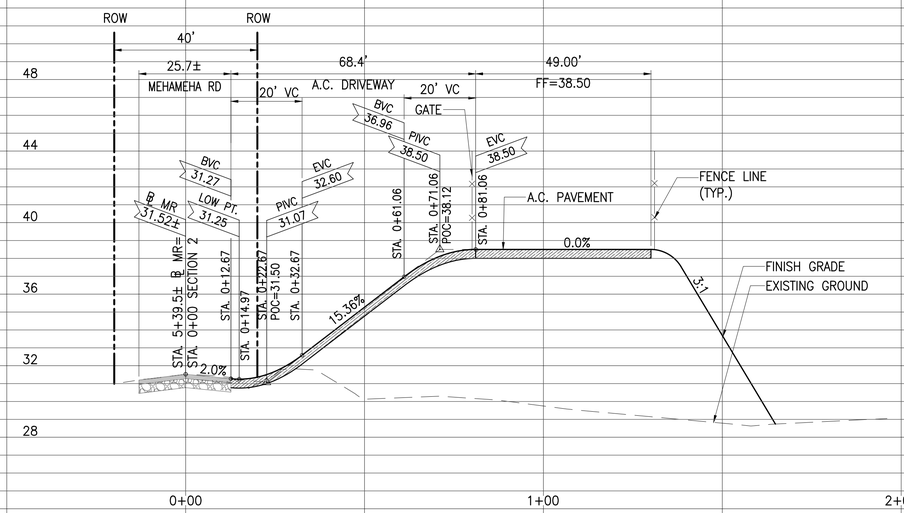

2 CA-8 SECTION "2"
SCALE: HORIZ:1"=20'
VERT.: 1"=4'

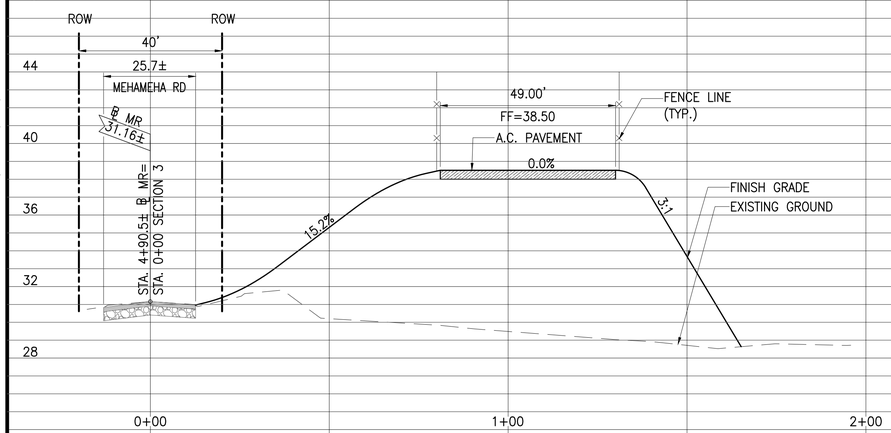

3 CA-8 SECTION "3"
SCALE: HORIZ:1"=20'
VERT.: 1"=4'

DHHL NORTH PUMP STATION SITE SECTIONS

SCALE: HORIZ:1"=20'
VERT.: 1"=4'

AustinTsutsumi
& ASSOCIATES, INC.
CIVIL ENGINEERS I SURVEYORS
HONOLULU I WAILUKU I HILO, HAWAII

501 SUMNER STREET, SUITE 521
HONOLULU, HAWAII 96817

PHONE: 808-533-3646
FAX: 808-526-1267

STATE OF HAWAII
DEPARTMENT OF
HAWAIIAN HOME LANDS

PŪLEHUNUI
REGIONAL
INFRASTRUCTURE

AUSTIN, TSUTSUMI & ASSOC., INC.
ENGINEERS, SURVEYORS • HONOLULU, HAWAII

BRYAN H. KOBA
LICENSED PROFESSIONAL ENGINEER
No. 14948
HAWAII U.S.A.

This work was prepared by me or under my supervision and construction of this project will be under my observation. (Observation of construction as defined in Chapter 16-115 Subchapter 1 Definitions of the Hawaii Administrative Rules "Professional Engineers, Architects, Surveyors, and Landscape Architects.")

SIGNATURE APRIL 30, 2020
EXP. DATE OF THE LICENSE

0 1 2
LINE IS 2 INCHES AT FULL SIZE
(If NOT 2-inches : Scale Accordingly)

REVISION	DATE	BRIEF	BY

Project No:	16-576
Scale:	AS NOTED
Date:	1/31/2020
Designed By:	BHK
Drawn By:	BHK
Checked By:	

DHHL NORTH PUMP
STATION SITE SECTIONS

DWG. NO.
CA1-8

SHEET 14 OF 201

FILE	POCKET	FOLDER	NO.

JOB NO. 0-11-056.004
FN: Z:\2018\18-524 (16-576 PULEHUNUI NORTH SEWER_PHASE 6.3 WASTEWATER TREATMENT FACILITY) BRYAN\DWG\CA1-8 DHHL NORTH PS SITE SECTIONS.DWG

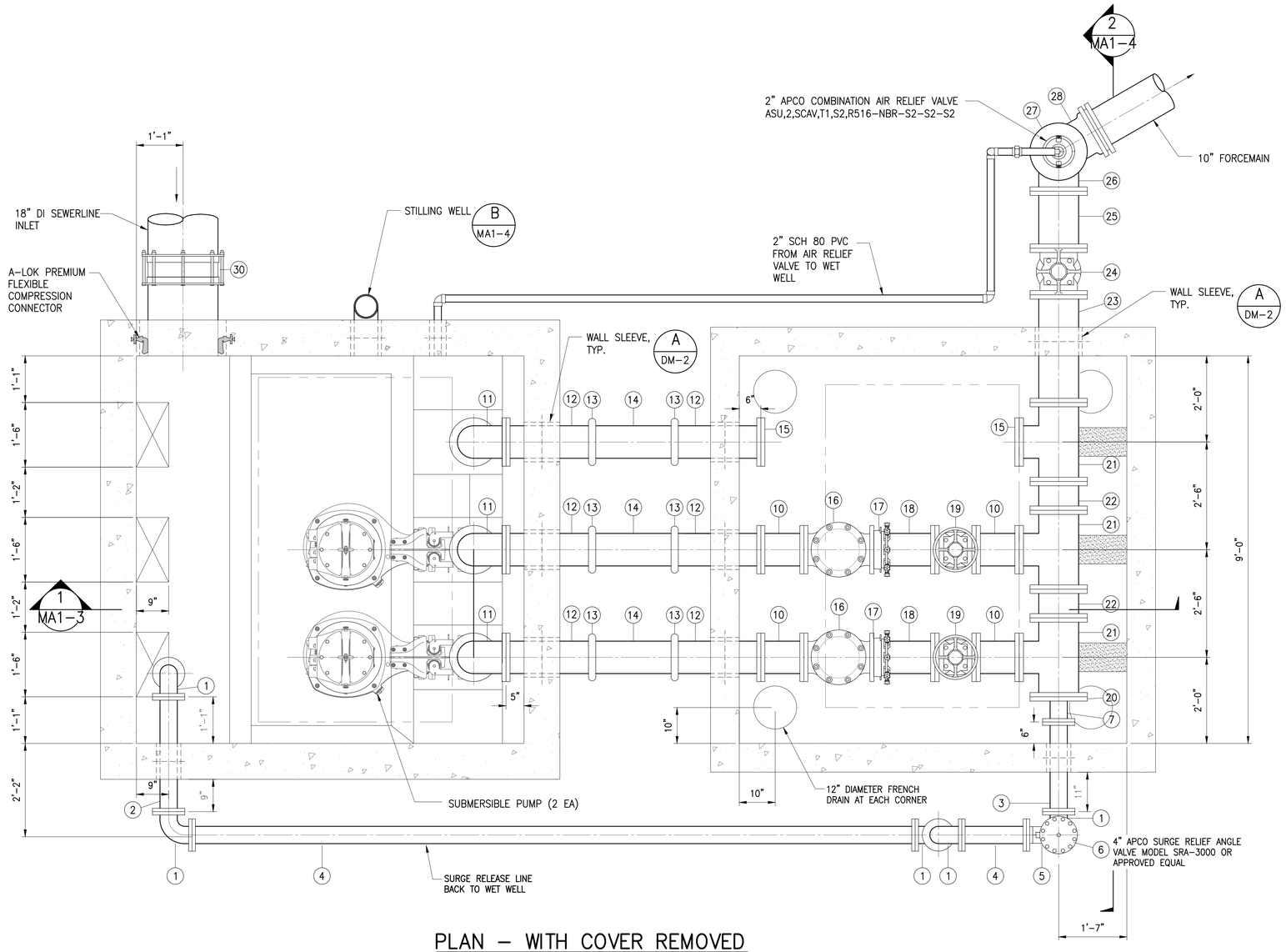

PLAN – WITH COVER REMOVED

SCALE: 3/4"=1'-0"

PUMP MANUF.	NO. OF UNITS	TYPE	MODEL NO.	FLOW, GPM	STATIC, FT	TDH. FT	SPEED, RPM	Hp	PUMP EFF.	VAC	PHASE	FREQUENCY
FLYGT	TWO (2)	SUBMERSIBLE	NP 3315 HT3-455	1400	122	255	1780	160	65.0%	480	3	60Hz

SCHEDULE OF VALVES AND FITTINGS

NO.	DESCRIPTION
1	4" 1/4 BEND, DI, FE
2	4" WALL SPOOL, DI, FE, 2'-8" LONG
3	4" WALL SPOOL, DI, FE, 2'-1" LONG
4	4" SPOOL, DI, FE, L=1'-6"
5	4" TEE, DI, FE
6	4" PRESSURE RELIEF VALVE
7	4" SPOOL, FExNPT, ±7" LONG
8	4" GATE VALVE, FE
9	8"x6" CONCENTRIC REDUCER, DI, FE
10	8" SPOOL, DI, FE, L=1'-0"
11	8" 1/4 BEND, FE
12	8" WALL SPOOL, DI, FExGE, 2'-0" LONG
13	8" VICTAULIC COUPLING, STYLE 31
14	8" SPOOL, CLASS 54 GE, 1'-11" LONG
15	8" BLIND FLANGE
16	8" SWING CHECK VALVE, APCO MODEL CVS-6000-BMB OR APPROVED EQUAL
17	8" RESTRAINED FLANGE COUPLING ADAPTOR
18	8" SPOOL, DI, FExPE, LTS
19	8" GATE VALVE, FE
20	10" BLIND FLANGE, TAPPED FROM 4" NPT
21	10"x8" TEE, DI, FE
22	10" SPOOL, DI, FE, 8" LONG
23	10" WALL SPOOL, DI, FE, 2'-6" LONG
24	10" GATE VALVE, FE
25	10" SPOOL, DI, FE, L=1'-4"
26	10" TEE, FE
27	10" BLIND FLANGE, DI, 2" TAPPED NPT
28	10" 1/4 BEND, MJ, W/ RESTRAINED JOINTS
29	10" SPOOL, DI FExPE, LTS
30	18" COUPLING ADAPTOR

NOTE:

1. ALL FITTINGS TO BE OF DUCTILE IRON UNLESS INDICATED OTHERWISE.
2. All DUCTILE IRON PIPING SHALL BE CLASS 54 UNLESS INDICATED OTHERWISE

AustinTsutsumi & ASSOCIATES, INC.
CIVIL ENGINEERS I SURVEYORS
HONOLULU I WAILUKU I HILO, HAWAII
501 SUMNER STREET, SUITE 521
HONOLULU, HAWAII 96817
PHONE: 808-533-3646
FAX: 808-526-1267

STATE OF HAWAII
DEPARTMENT OF
HAWAIIAN HOME LANDS

PŪLEHUNUI
REGIONAL
INFRASTRUCTURE

AUSTIN, TSUTSUMI & ASSOC., INC.
ENGINEERS, SUVEYORS • HONOLULU, HAWAII

BRYAN H. KOBA
LICENSED PROFESSIONAL ENGINEER
No. 14948
HAWAII U.S.A.

This work was prepared by me or under my supervision and construction of this project will be under my observation. (Observation of construction as defined in Chapter 16-115 Subchapter 1 Definitions of the Hawaii Administrative Rules "Professional Engineers, Architects, Surveyors, and Landscape Architects.")

SIGNATURE APRIL 30, 2020
EXP. DATE OF THE LICENSE

0 1 2
LINE IS 2 INCHES AT FULL SIZE
(If NOT 2-inches : Scale Accordingly)

REVISION	DATE	BRIEF	BY

Project No:	16-576
Scale:	AS NOTED
Date:	1/31/2020
Designed By:	BHK
Drawn By:	BHK
Checked By:	

DHHL NORTH
PUMP STATION
PLAN

DWG. NO.
MA1-1

SHEET 15 OF 201

FILE	POCKET	FOLDER	NO.

JOB NO. 0-11-056.004
FN: C:\PROJECT FOLDER\16-576 DHHL PROJECT\ENGINEERING\DWG\CONSTRUCTION DRAWING SET\MA1-1, MA1-2, MA1-3, MA1-4 DHHL NORTH PS.DWG

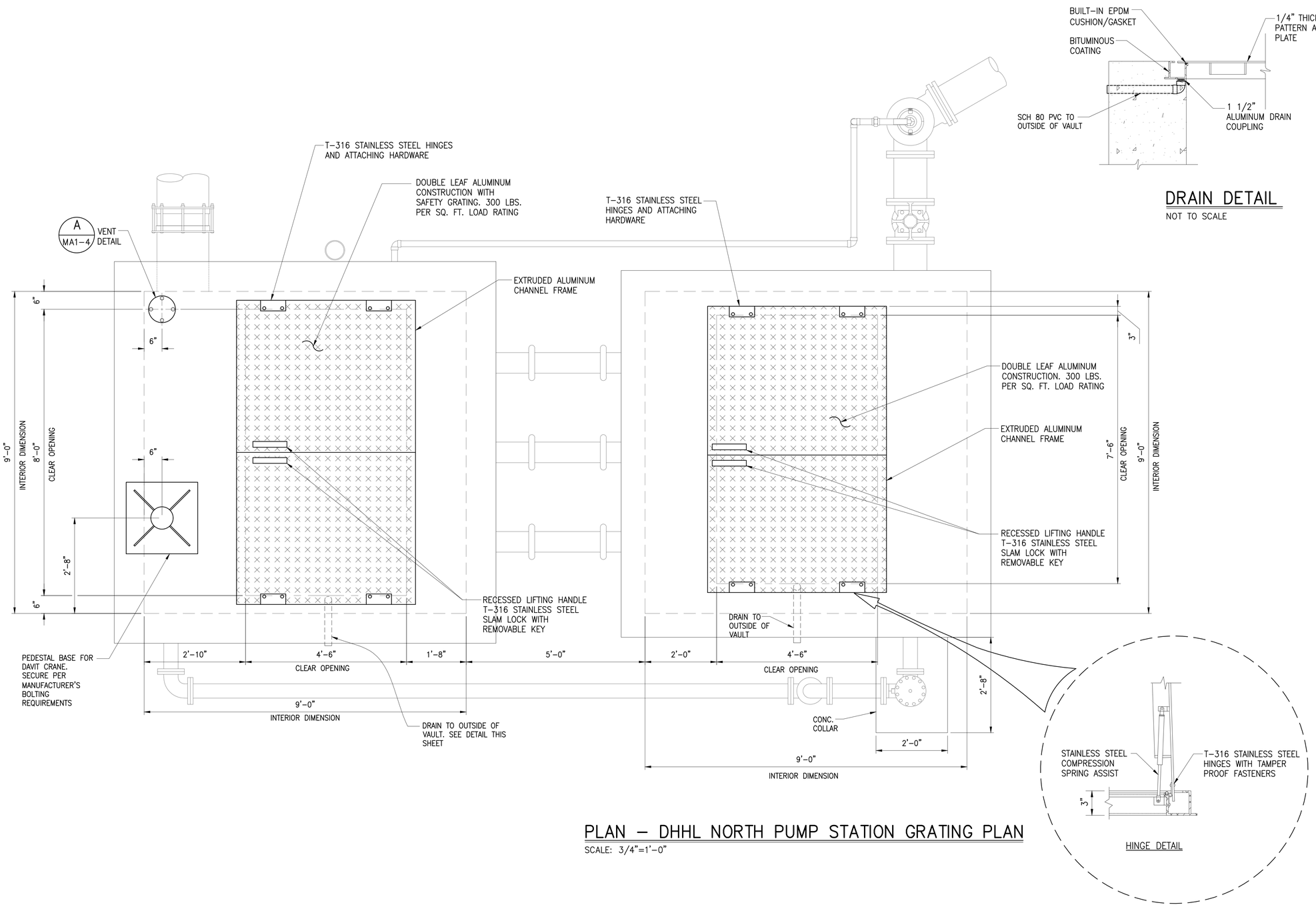

DRAIN DETAIL

NOT TO SCALE

PLAN – DHHL NORTH PUMP STATION GRATING PLAN

SCALE: 3/4"=1'-0"

HINGE DETAIL

JOB NO. 0-11-056.004
FN: C:\PROJECT FOLDER\16-576 DHHL PROJECT\ENGINEERING\DWG\CONSTRUCTION DRAWING SET\MA1-1, MA1-2, MA1-3, MA1-4 DHHL NORTH PS.DWG

AustinTsutsumi
& ASSOCIATES, INC.
CIVIL ENGINEERS I SURVEYORS
HONOLULU I WAILUKU I HILO, HAWAII

501 SUMNER STREET, SUITE 521
HONOLULU, HAWAII 96817

PHONE: 808-533-3646
FAX: 808-526-1267

STATE OF HAWAII
DEPARTMENT OF
HAWAIIAN HOME LANDS

PŪLEHUNUI
REGIONAL
INFRASTRUCTURE

AUSTIN, TSUTSUMI & ASSOC., INC.
ENGINEERS, SURVEYORS • HONOLULU, HAWAII

BRYAN H. KOBA
LICENSED PROFESSIONAL ENGINEER
No. 14948
HAWAII U.S.A.

This work was prepared by me or under my supervision and construction of this project will be under my observation. (Observation of construction as defined in Chapter 16-115 Subchapter 1 Definitions of the Hawaii Administrative Rules "Professional Engineers, Architects, Surveyors, and Landscape Architects.")

SIGNATURE — APRIL 30, 2020 EXP. DATE OF THE LICENSE

0 1 2
LINE IS 2 INCHES AT FULL SIZE
(If NOT 2-inches : Scale Accordingly)

REVISION	DATE	BRIEF	BY

Project No:	16-576
Scale:	AS NOTED
Date:	1/31/2020
Designed By:	BHK
Drawn By:	BHK
Checked By:	

DHHL NORTH PUMP STATION GRATING PLAN

DWG. NO.
MA1-2

SHEET 16 OF 201

FILE	POCKET	FOLDER	NO.

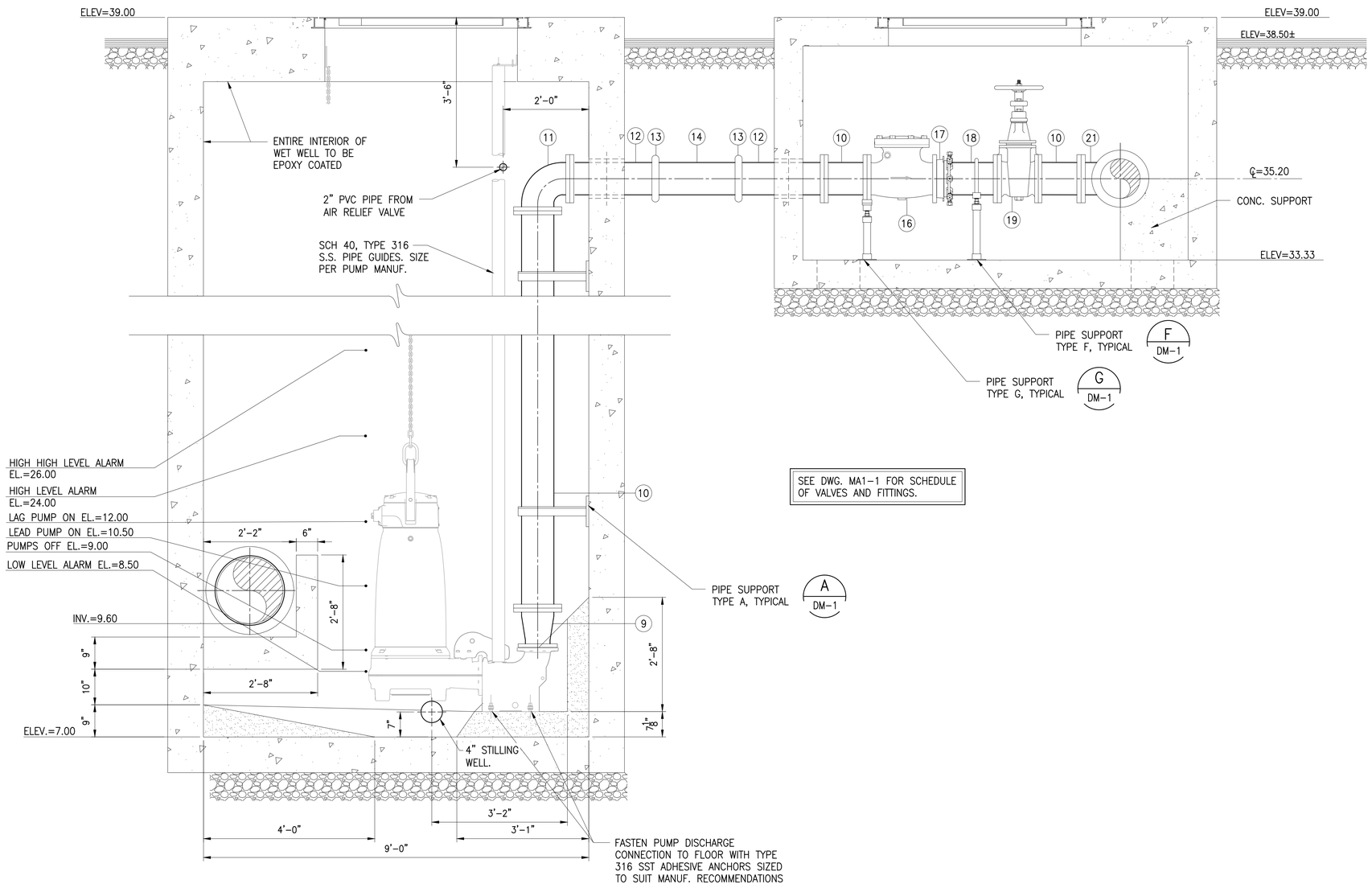

SECTION 1 MA1-3
SCALE: 3/4"=1'-0"

AustinTsutsumi & ASSOCIATES, INC.
CIVIL ENGINEERS I SURVEYORS
HONOLULU I WAILUKU I HILO, HAWAII

501 SUMNER STREET, SUITE 521
HONOLULU, HAWAII 96817

PHONE: 808-533-3646
FAX: 808-526-1267

STATE OF HAWAII
DEPARTMENT OF
HAWAIIAN HOME LANDS

PŪLEHUNUI
REGIONAL
INFRASTRUCTURE

AUSTIN, TSUTSUMI & ASSOC., INC.
ENGINEERS, SUVEYORS • HONOLULU, HAWAII

BRYAN H. KOBA
LICENSED PROFESSIONAL ENGINEER
No. 14948
HAWAII U.S.A.

This work was prepared by me or under my supervision and construction of this project will be under my observation. (Observation of construction as defined in Chapter 16-115 Subchapter 1 Definitions of the Hawaii Administrative Rules "Professional Engineers, Architects, Surveyors, and Landscape Architects.")

SIGNATURE APRIL 30, 2020 EXP. DATE OF THE LICENSE

0 1 2
LINE IS 2 INCHES AT FULL SIZE
(If NOT 2-inches : Scale Accordingly)

REVISION	DATE	BRIEF	BY

Project No:	16-576
Scale:	AS NOTED
Date:	1/31/2020
Designed By:	BHK
Drawn By:	BHK
Checked By:	

DHHL NORTH
PUMP STATION
SECTION

DWG. NO.
MA1-3

SHEET 17 OF 201

FILE	POCKET	FOLDER	NO.

JOB NO. 0-11-056.004
FN: C:\PROJECT FOLDER\16-576 DHHL PROJECT\ENGINEERING\DWG\CONSTRUCTION DRAWING SET\MA1-1, MA1-2, MA1-3, MA1-4 DHHL NORTH PS.DWG

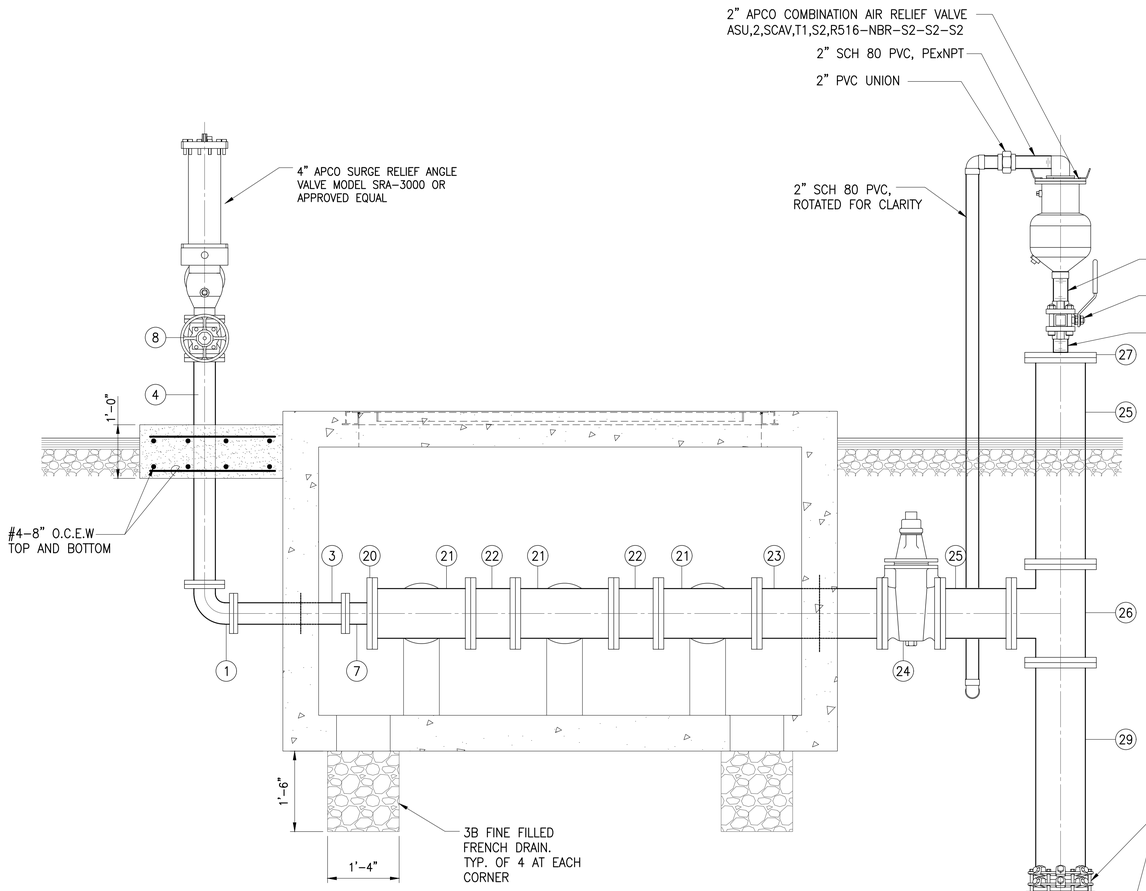

SECTION 2
SCALE: 3/4"=1'-0" MA1-4

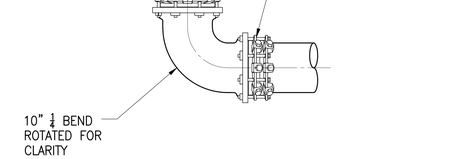

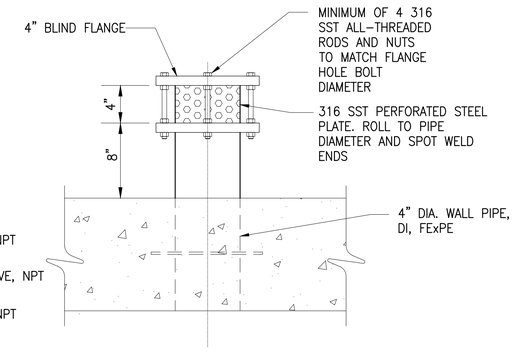

VENT DETAIL A
NOT TO SCALE MA1-4

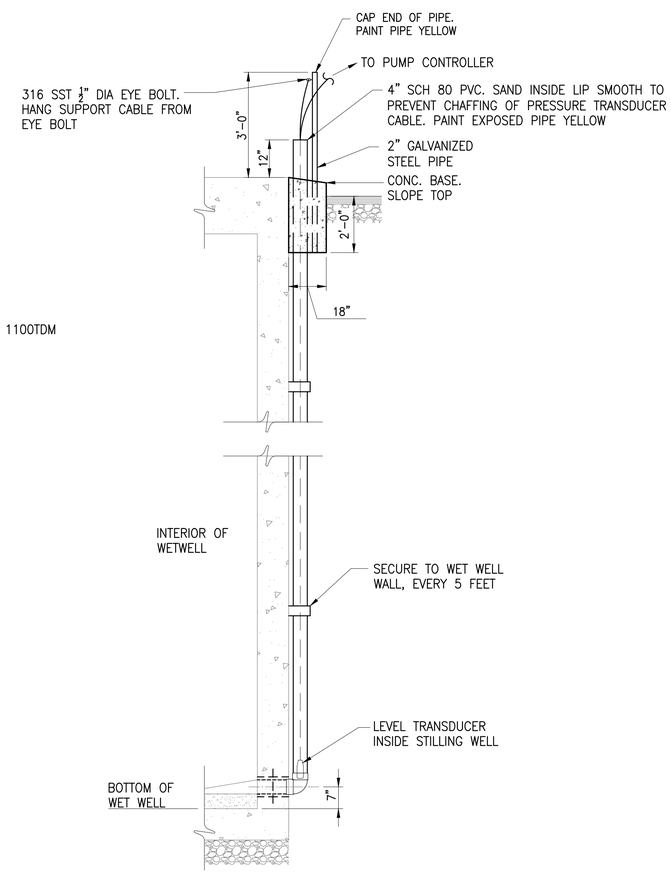

STILLING WELL DETAIL B
NOT TO SCALE MA1-4

AustinTsutsumi
& ASSOCIATES, INC.
CIVIL ENGINEERS I SURVEYORS
HONOLULU I WAILUKU I HILO, HAWAII

501 SUMNER STREET, SUITE 521
HONOLULU, HAWAII 96817

PHONE: 808-533-3646
FAX: 808-526-1267

STATE OF HAWAII
DEPARTMENT OF
HAWAIIAN HOME LANDS

PŪLEHUNUI
REGIONAL
INFRASTRUCTURE

AUSTIN, TSUTSUMI & ASSOC., INC.
ENGINEERS, SURVEYORS • HONOLULU, HAWAII

BRYAN H. KOBA
LICENSED PROFESSIONAL ENGINEER
No. 14948
HAWAII U.S.A.

This work was prepared by me or under my supervision and construction of this project will be under my observation. (Observation of construction as defined in Chapter 16-115 Subchapter 1 Definitions of the Hawaii Administrative Rules "Professional Engineers, Architects, Surveyors, and Landscape Architects.")

SIGNATURE APRIL 30, 2020
EXP. DATE OF THE LICENSE

0 1 2
LINE IS 2 INCHES AT FULL SIZE
(If NOT 2-inches : Scale Accordingly)

REVISION	DATE	BRIEF	BY

Project No:	16-576
Scale:	AS NOTED
Date:	1/31/2020
Designed By:	BHK
Drawn By:	BHK
Checked By:	

DHHL NORTH PUMP
STATION MECHANICAL
SECTION

DWG. NO.
MA1-4

FILE	POCKET	FOLDER	NO.

JOB NO. 0-11-056.004
FN: C:\PROJECT FOLDER\16-576 DHHL PROJECT\ENGINEERING\DWG\CONSTRUCTION DRAWING SET\MA1-1, MA1-2, MA1-3, MA1-4 DHHL NORTH PS.DWG

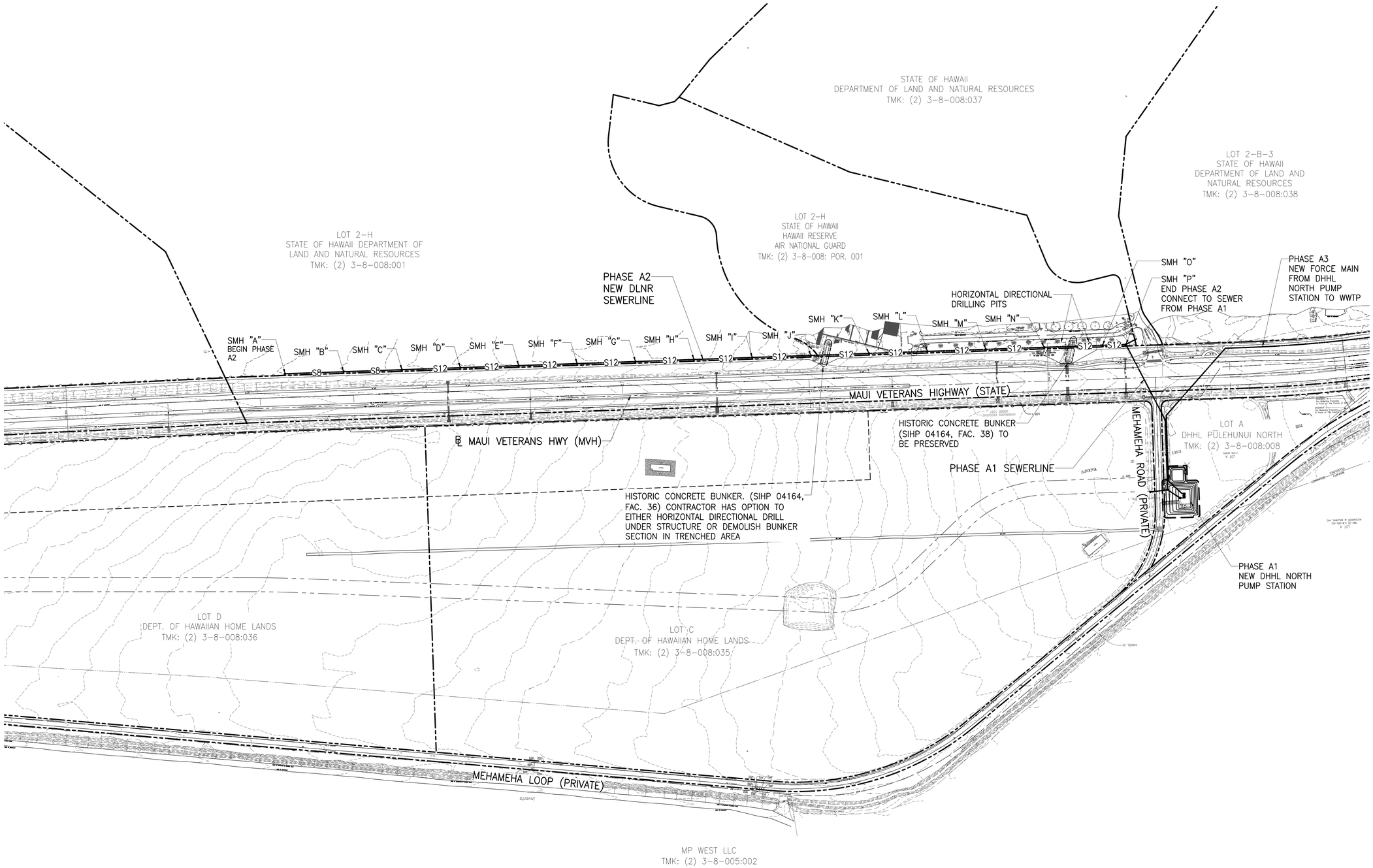

NORTH

PHASE A2 SITE PLAN DLNR GRAVITY SEWER

SCALE: 1"=200'

AustinTsutsumi
& ASSOCIATES, INC.
CIVIL ENGINEERS I SURVEYORS
HONOLULU I WAILUKU I HILO, HAWAII

501 SUMNER STREET, SUITE 521
HONOLULU, HAWAII 96817

PHONE: 808-533-3646
FAX: 808-526-1267

STATE OF HAWAII
DEPARTMENT OF
HAWAIIAN HOME LANDS

PŪLEHUNUI
REGIONAL
INFRASTRUCTURE

AUSTIN, TSUTSUMI & ASSOC., INC.
ENGINEERS, SURVEYORS • HONOLULU, HAWAII

BRYAN H. KOBA
LICENSED PROFESSIONAL ENGINEER
No. 14948
HAWAII U.S.A.

This work was prepared by me or under my supervision and construction of this project will be under my observation. (Observation of construction as defined in Chapter 16-115 Subchapter 1 Definitions of the Hawaii Administrative Rules "Professional Engineers, Architects, Surveyors, and Landscape Architects.")

SIGNATURE APRIL 30, 2020
EXP. DATE OF THE LICENSE

0 1 2
LINE IS 2 INCHES AT FULL SIZE
(If NOT 2-inches : Scale Accordingly)

REVISION	DATE	BRIEF	BY

Project No:	16-576
Scale:	AS NOTED
Date:	1/31/2020
Designed By:	BHK
Drawn By:	BHK
Checked By:	

PHASE A2 SITE PLAN
DLNR GRAVITY SEWER

DWG. NO.

CA2-1

SHEET 19 OF 201

FILE	POCKET	FOLDER	NO.

JOB NO. 0-11-056.004
FN: Z:\2018\18-524 (16-576 PULEHUNUI NORTH SEWER_PHASE 6.3 WASTEWATER TREATMENT FACILITY) BRYAN\DWG\CA2-1 PHASE A2 SITE PLAN DLNR GRAVITY SEWER.DWG

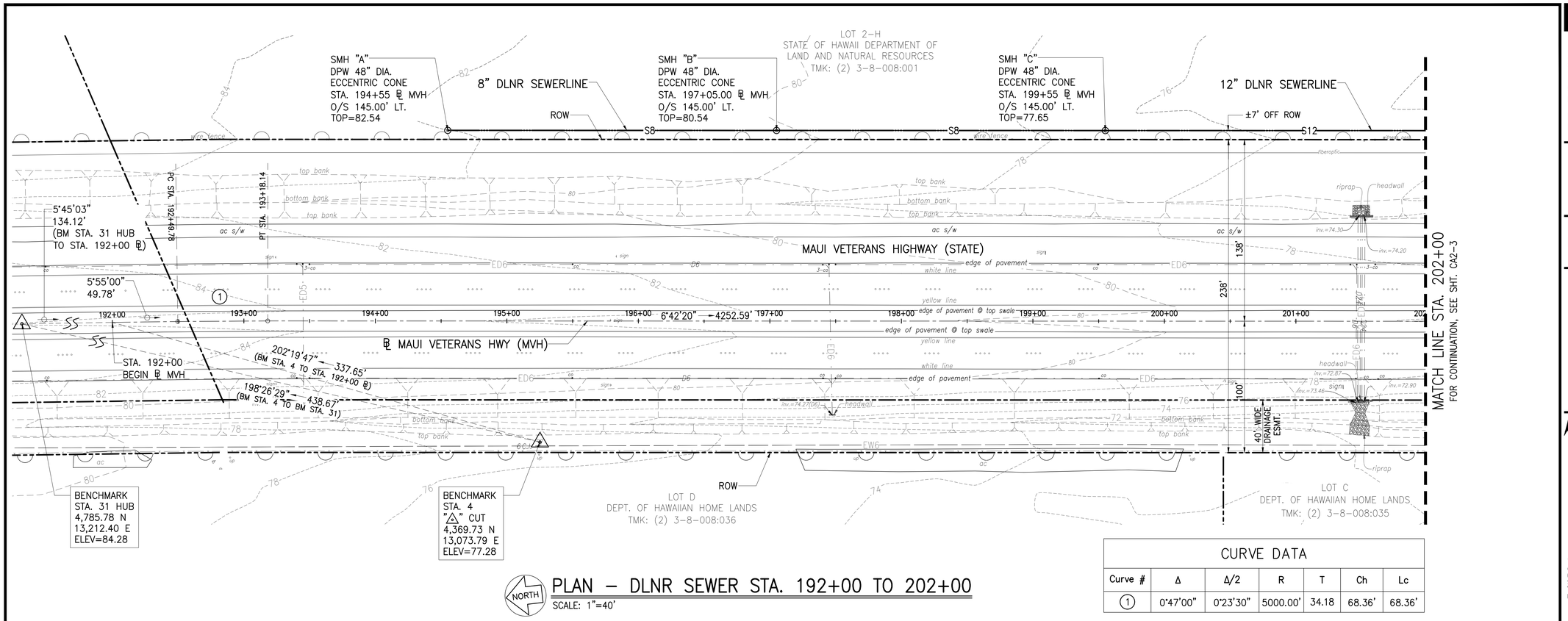

NORTH

PLAN – DLNR SEWER STA. 192+00 TO 202+00

SCALE: 1"=40'

CURVE DATA

Curve #	Δ	Δ/2	R	T	Ch	Lc
1	0°47'00"	0°23'30"	5000.00'	34.18	68.36'	68.36'

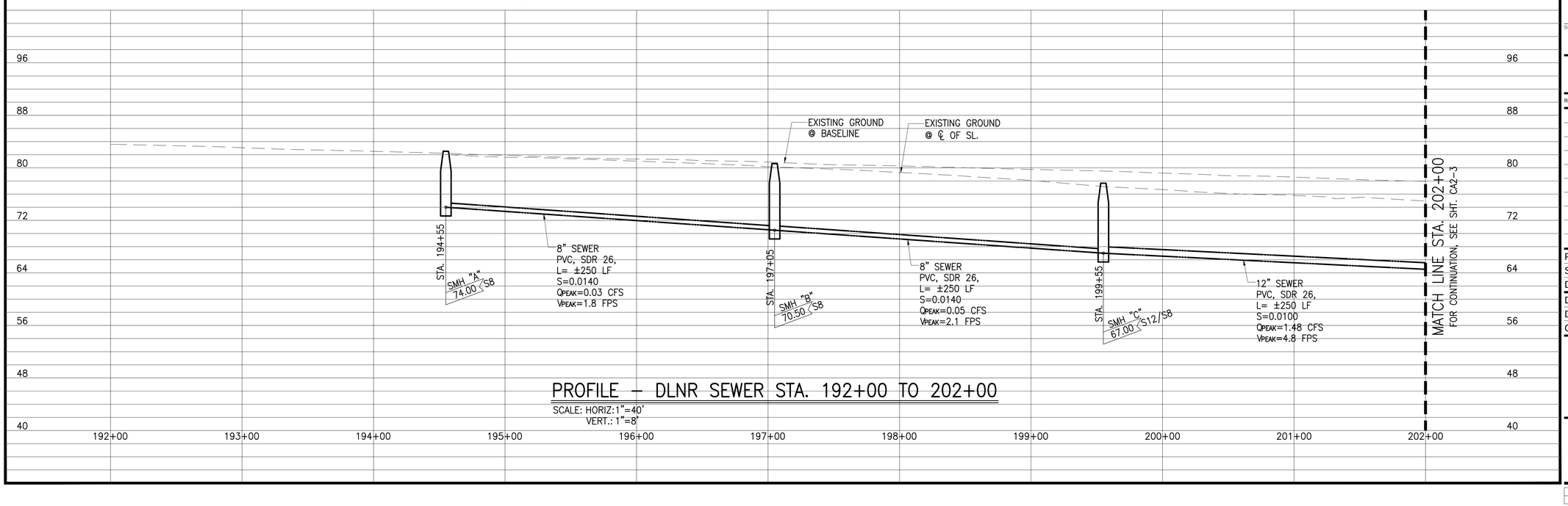

PROFILE – DLNR SEWER STA. 192+00 TO 202+00

SCALE: HORIZ:1"=40'
VERT.: 1"=8'

AustinTsutsumi
& ASSOCIATES, INC.
CIVIL ENGINEERS I SURVEYORS
HONOLULU I WAILUKU I HILO, HAWAII

501 SUMNER STREET, SUITE 521
HONOLULU, HAWAII 96817

PHONE: 808-533-3646
FAX: 808-526-1267

STATE OF HAWAII
DEPARTMENT OF
HAWAIIAN HOME LANDS

PŪLEHUNUI
REGIONAL
INFRASTRUCTURE

AUSTIN, TSUTSUMI & ASSOC., INC.
ENGINEERS, SURVEYORS • HONOLULU, HAWAII

BRYAN H. KOBA
LICENSED PROFESSIONAL ENGINEER
No. 14948
HAWAII U.S.A.

This work was prepared by me or under my supervision and construction of this project will be under my observation. (Observation of construction as defined in Chapter 16-115 Subchapter 1 Definitions of the Hawaii Administrative Rules "Professional Engineers, Architects, Surveyors, and Landscape Architects.")

SIGNATURE APRIL 30, 2020
EXP. DATE OF THE LICENSE

0 1 2
LINE IS 2 INCHES AT FULL SIZE
(IF NOT 2-inches ; Scale Accordingly)

REVISION	DATE	BRIEF	BY

Project No:	16-576
Scale:	AS NOTED
Date:	1/31/2020
Designed By:	BHK
Drawn By:	BHK
Checked By:	

**PLAN AND PROFILE
DLNR SEWER STA
192+00 TO 202+00**

DWG. NO.

CA2-2

SHEET 20 OF 201

FILE	POCKET	FOLDER	NO.

JOB NO. 0-11-056.004
FN: Z:\2018\18-524 (16-576 PULEHUNUI NORTH SEWER_PHASE 6.3 WASTEWATER TREATMENT FACILITY) BRYAN\DWG\CA2-2 PP DLNR SEWER STA 192+00 TO STA 202+00.DWG

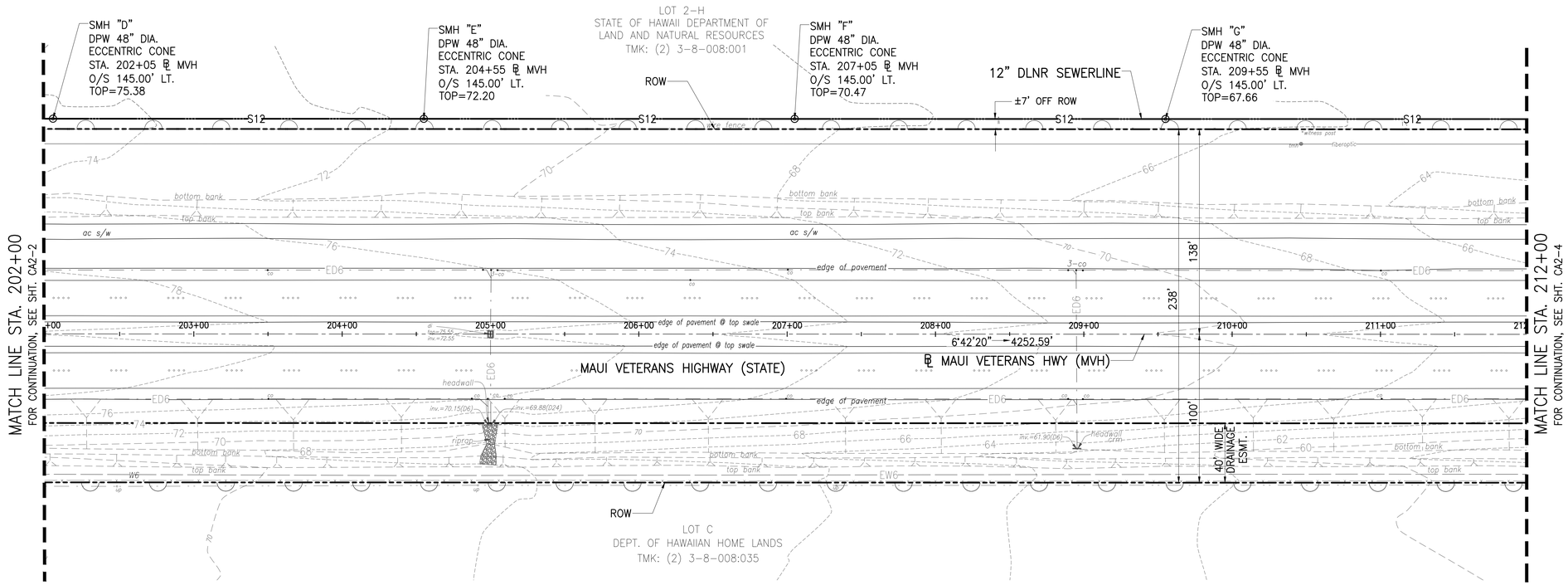

PLAN – DLNR SEWER STA. 202+00 TO 212+00

SCALE: 1"=40'

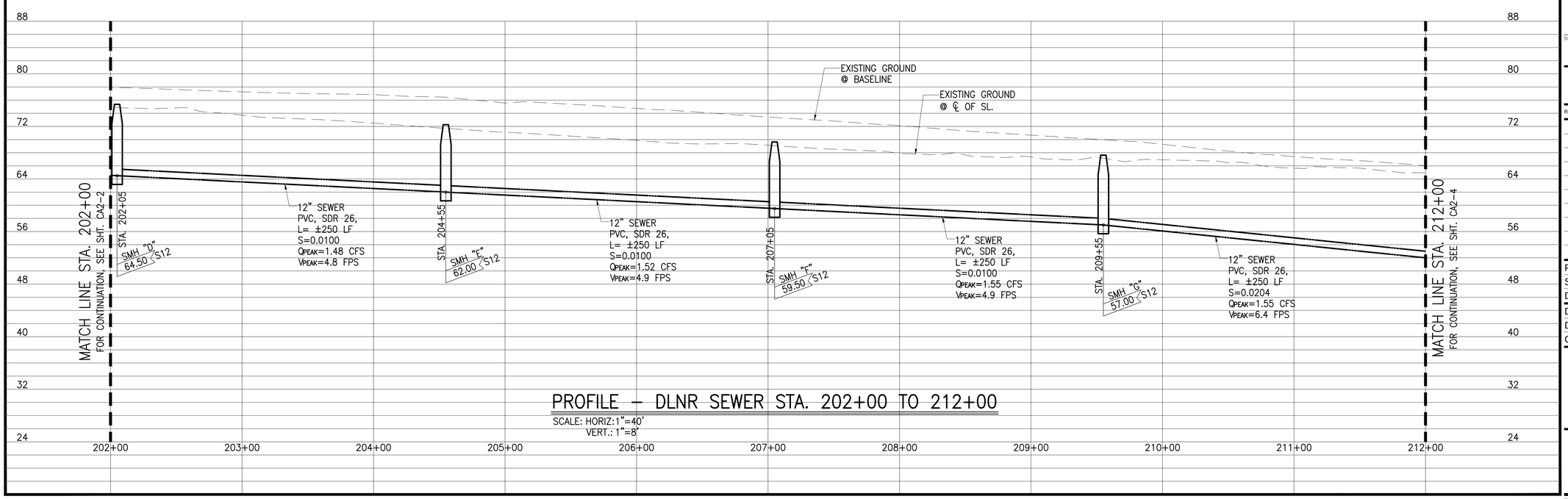

PROFILE – DLNR SEWER STA. 202+00 TO 212+00

SCALE: HORIZ: 1"=40'
VERT.: 1"=8'

AustinTsutsumi
& ASSOCIATES, INC.
CIVIL ENGINEERS I SURVEYORS
HONOLULU I WAILUKU I HILO, HAWAII

501 SUMNER STREET, SUITE 521
HONOLULU, HAWAII 96817

PHONE: 808-533-3646
FAX: 808-526-1267

STATE OF HAWAII
DEPARTMENT OF
HAWAIIAN HOME LANDS

PŪLEHUNUI
REGIONAL
INFRASTRUCTURE

AUSTIN, TSUTSUMI & ASSOC., INC.
ENGINEERS, SURVEYORS • HONOLULU, HAWAII

BRYAN H. KOBA
LICENSED PROFESSIONAL ENGINEER
No. 14948
HAWAII U.S.A.

This work was prepared by me or under my supervision and construction of this project will be under my observation. (Observation of construction as defined in Chapter 16-115 Subchapter 1 Definitions of the Hawaii Administrative Rules "Professional Engineers, Architects, Surveyors, and Landscape Architects.")

SIGNATURE — APRIL 30, 2020 EXP. DATE OF THE LICENSE

0 1 2
LINE IS 2 INCHES AT FULL SIZE
(If NOT 2-inches : Scale Accordingly)

REVISION	DATE	BRIEF	BY

Project No:	16-576
Scale:	AS NOTED
Date:	1/31/2020
Designed By:	BHK
Drawn By:	BHK
Checked By:	

PLAN AND PROFILE DLNR SEWER STA 202+00 TO 212+00

DWG. NO.

CA2-3

SHEET 21 OF 201

FILE	POCKET	FOLDER	NO.

JOB NO. O-11-056.004
FN: Z:\2018\18-524 (16-576 PULEHUNUI NORTH SEWER_PHASE 6.3 WASTEWATER TREATMENT FACILITY) BRYAN\DWG\CA2-3 PP DLNR SEWER STA 202+00 TO STA 212+00.DWG

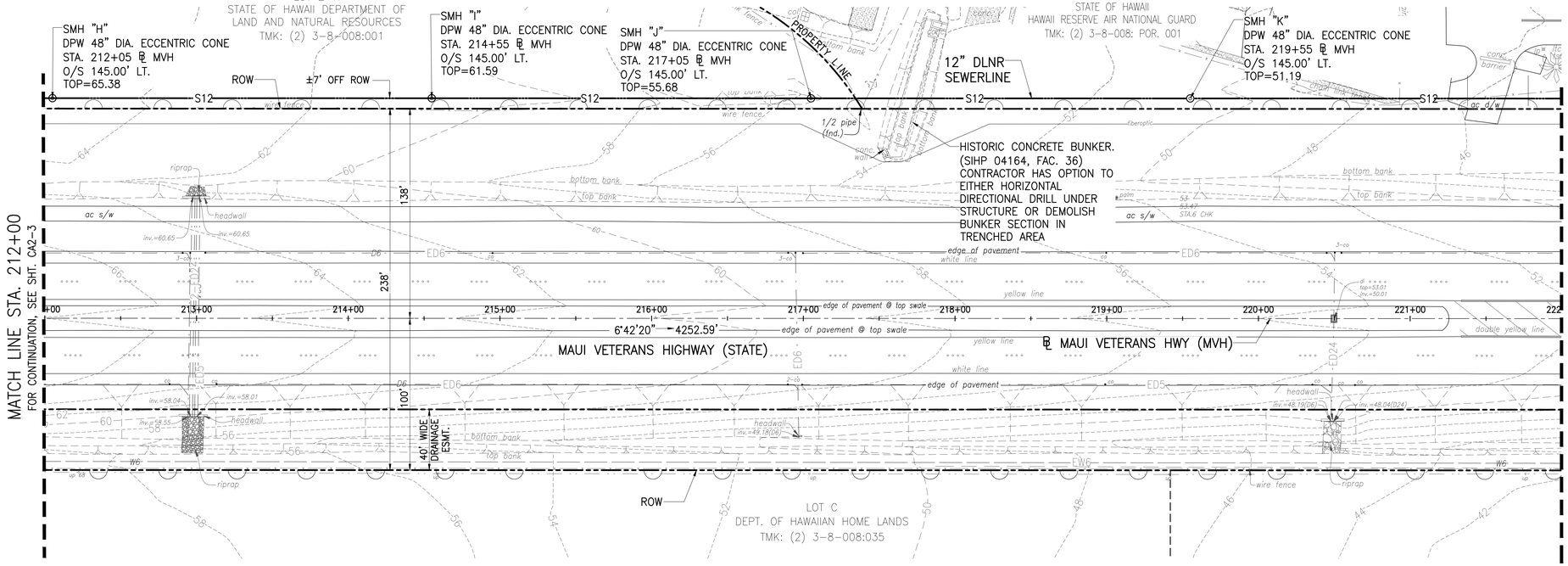

PLAN – DLNR SEWER STA. 212+00 TO 222+00

SCALE: 1"=40'

NOTES:

1. CONTRACTOR TO COORDINATE WITH HAWAII RESERVE AIR NATIONAL GUARD REGARDING ACCESS DURING CONSTRUCTION.
2. CONTRACTOR TO RESTORE LANDSCAPING AND IRRIGATION DISTURBED DURING CONSTRUCTION.

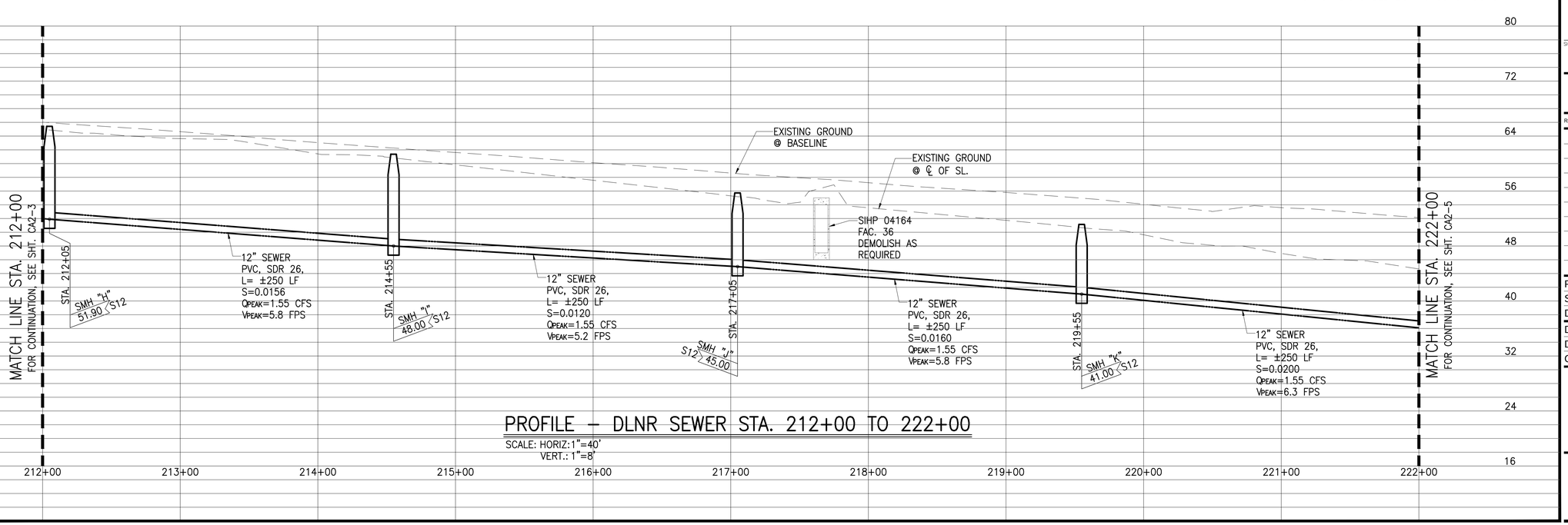

PROFILE – DLNR SEWER STA. 212+00 TO 222+00

SCALE: HORIZ:1"=40'
VERT.: 1"=8'

AustinTsutsumi & ASSOCIATES, INC.
CIVIL ENGINEERS I SURVEYORS
HONOLULU I WAILUKU I HILO, HAWAII

501 SUMNER STREET, SUITE 521
HONOLULU, HAWAII 96817

PHONE: 808-533-3646
FAX: 808-526-1267

STATE OF HAWAII
DEPARTMENT OF HAWAIIAN HOME LANDS

PŪLEHUNUI REGIONAL INFRASTRUCTURE

AUSTIN, TSUTSUMI & ASSOC., INC.
ENGINEERS, SURVEYORS • HONOLULU, HAWAII

BRYAN H. KOBA
LICENSED PROFESSIONAL ENGINEER
No. 14948
HAWAII U.S.A.

This work was prepared by me or under my supervision and construction of this project will be under my observation. (Observation of construction as defined in Chapter 16-115 Subchapter 1 Definitions of the Hawaii Administrative Rules "Professional Engineers, Architects, Surveyors, and Landscape Architects.")

Bryan H. Koba — APRIL 30, 2020
SIGNATURE — EXP. DATE OF THE LICENSE

0 1 2
LINE IS 2 INCHES AT FULL SIZE
(If NOT 2-inches : Scale Accordingly)

REVISION	DATE	BRIEF	BY

Project No:	16-576
Scale:	AS NOTED
Date:	1/31/2020
Designed By:	BHK
Drawn By:	BHK
Checked By:	

PLAN AND PROFILE
DLNR SEWER STA
212+00 TO 222+00

DWG. NO.
CA2-4

SHEET 22 OF 201

FILE	POCKET	FOLDER	NO.

JOB NO. 0-11-056.004
FN: Z:\2018\18-524 (16-576 PULEHUNUI NORTH SEWER_PHASE 6.3 WASTEWATER TREATMENT FACILITY) BRYAN\DWG\CA2-4 PP DLNR SEWER STA 212+00 TO STA 222+00.DWG

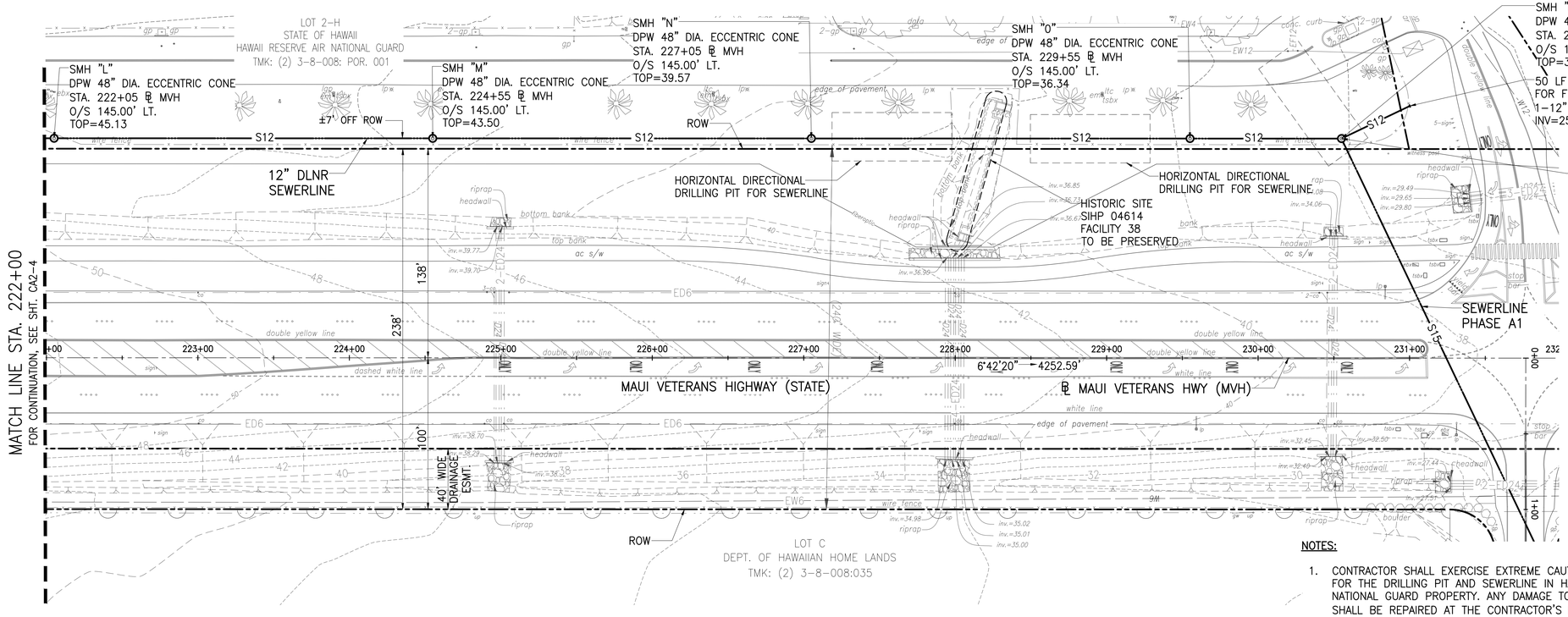

PLAN – DLNR SEWER STA. 222+00 TO 232+00

SCALE: 1"=40'

NOTES:

1. CONTRACTOR SHALL EXERCISE EXTREME CAUTION WHILE EXCAVATING FOR THE DRILLING PIT AND SEWERLINE IN HAWAII RESERVE AIR NATIONAL GUARD PROPERTY. ANY DAMAGE TO EXISTING UTILITIES SHALL BE REPAIRED AT THE CONTRACTOR'S EXPENSE.
2. CONTRACTOR TO COORDINATE WITH HAWAII RESERVE AIR NATIONAL GUARD REGARDING ACCESS DURING CONSTRUCTION.
3. CONTRACTOR TO REPLACE LANDSCAPING AND IRRIGATION DISTURBED DURING CONSTRUCTION.

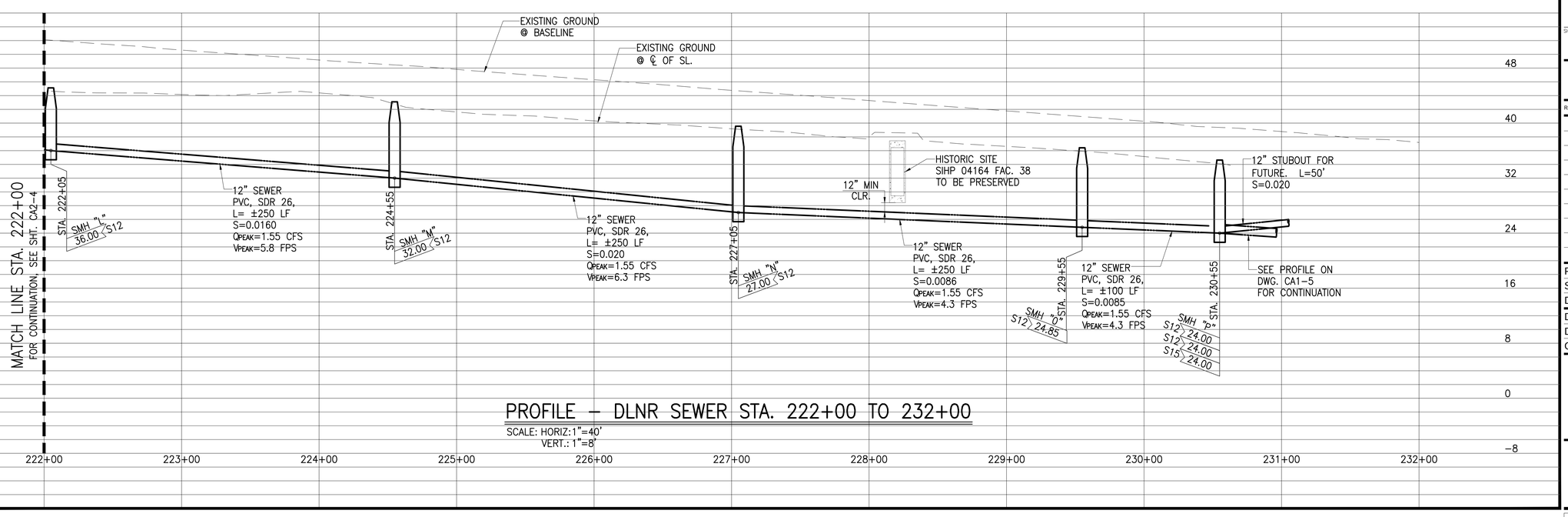

PROFILE – DLNR SEWER STA. 222+00 TO 232+00

SCALE: HORIZ:1"=40'
VERT.: 1"=8'

AustinTsutsumi
& ASSOCIATES, INC.
CIVIL ENGINEERS I SURVEYORS
HONOLULU I WAILUKU I HILO, HAWAII

501 SUMNER STREET, SUITE 521
HONOLULU, HAWAII 96817

PHONE: 808-533-3646
FAX: 808-526-1267

STATE OF HAWAII
DEPARTMENT OF
HAWAIIAN HOME LANDS

PŪLEHUNUI
REGIONAL
INFRASTRUCTURE

AUSTIN, TSUTSUMI & ASSOC., INC.
ENGINEERS, SURVEYORS • HONOLULU, HAWAII

BRYAN H. KOBA
LICENSED PROFESSIONAL ENGINEER
No. 14948
HAWAII U.S.A.

This work was prepared by me or under my supervision and construction of this project will be under my observation. (Observation of construction as defined in Chapter 16-115 Subchapter 1 Definitions of the Hawaii Administrative Rules "Professional Engineers, Architects, Surveyors, and Landscape Architects.")

SIGNATURE — APRIL 30, 2020 EXP. DATE OF THE LICENSE

0 1 2
LINE IS 2 INCHES AT FULL SIZE
(If NOT 2-inches : Scale Accordingly)

REVISION	DATE	BRIEF	BY

Project No:	16-576
Scale:	AS NOTED
Date:	1/31/2020
Designed By:	BHK
Drawn By:	BHK
Checked By:	

PLAN AND PROFILE
DLNR SEWER STA
222+00 TO 232+00

DWG. NO.

CA2-5

SHEET 23 OF 201

FILE	POCKET	FOLDER	NO.

JOB NO. O-11-056.004
FN: Z:\2018\18-524 (16-576 PULEHUNUI NORTH SEWER_PHASE 6.3 WASTEWATER TREATMENT FACILITY) BRYAN\DWG\CA2-5 PP DLNR SEWER STA 222+00 TO STA 232+00.DWG

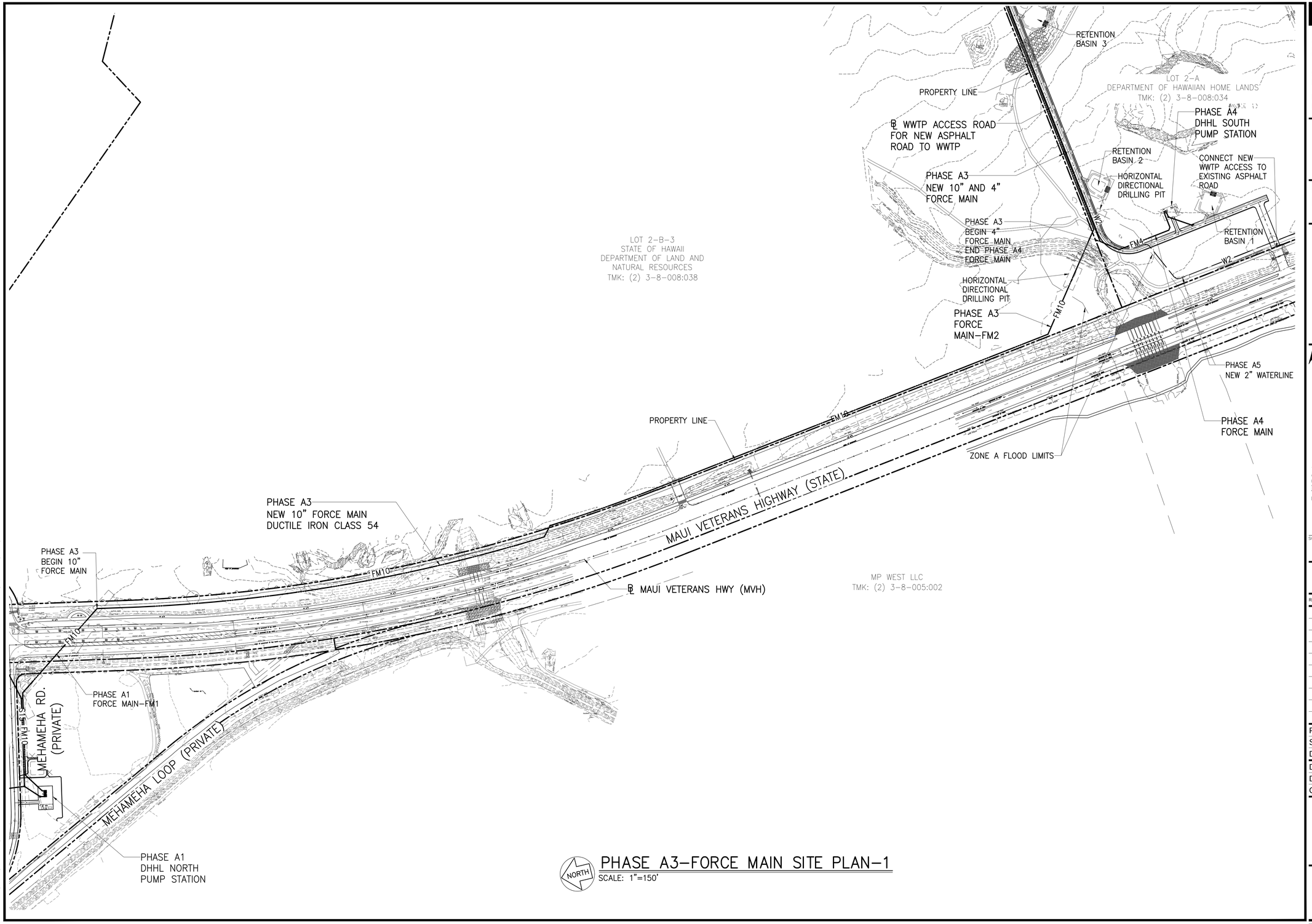

PHASE A3-FORCE MAIN SITE PLAN-1

SCALE: 1"=150'

JOB NO. O-11-056.004
FN: Z:\2018\18-524 (16-576 PULEHUNUI NORTH SEWER_PHASE 6.3 WASTEWATER TREATMENT FACILITY) BRYAN\DWG\CA3-1 PHASE A3 FORCE MAIN SITE PLAN 1.DWG

AustinTsutsumi
& ASSOCIATES, INC.
CIVIL ENGINEERS I SURVEYORS
HONOLULU I WAILUKU I HILO, HAWAII

501 SUMNER STREET, SUITE 521
HONOLULU, HAWAII 96817

PHONE: 808-533-3646
FAX: 808-526-1267

STATE OF HAWAII
DEPARTMENT OF
HAWAIIAN HOME LANDS

PŪLEHUNUI
REGIONAL
INFRASTRUCTURE

AUSTIN, TSUTSUMI & ASSOC., INC.
ENGINEERS, SUVEYORS • HONOLULU, HAWAII

BRYAN H. KOBA
LICENSED PROFESSIONAL ENGINEER
No. 14948
HAWAII U.S.A.

This work was prepared by me or under my supervision and construction of this project will be under my observation. (Observation of construction as defined in Chapter 16-115 Subchapter 1 Definitions of the Hawaii Administrative Rules "Professional Engineers, Architects, Surveyors, and Landscape Architects.")

SIGNATURE — APRIL 30, 2020 EXP. DATE OF THE LICENSE

0 1 2
LINE IS 2 INCHES AT FULL SIZE
(If NOT 2-inches : Scale Accordingly)

REVISION	DATE	BRIEF	BY

Project No:	16-576
Scale:	AS NOTED
Date:	1/31/2020
Designed By:	BHK
Drawn By:	BHK
Checked By:	

PHASE A3 FORCE MAIN
SITE PLAN - 1

DWG. NO.

CA3-1

SHEET 24 OF 201

FILE	POCKET	FOLDER	NO.

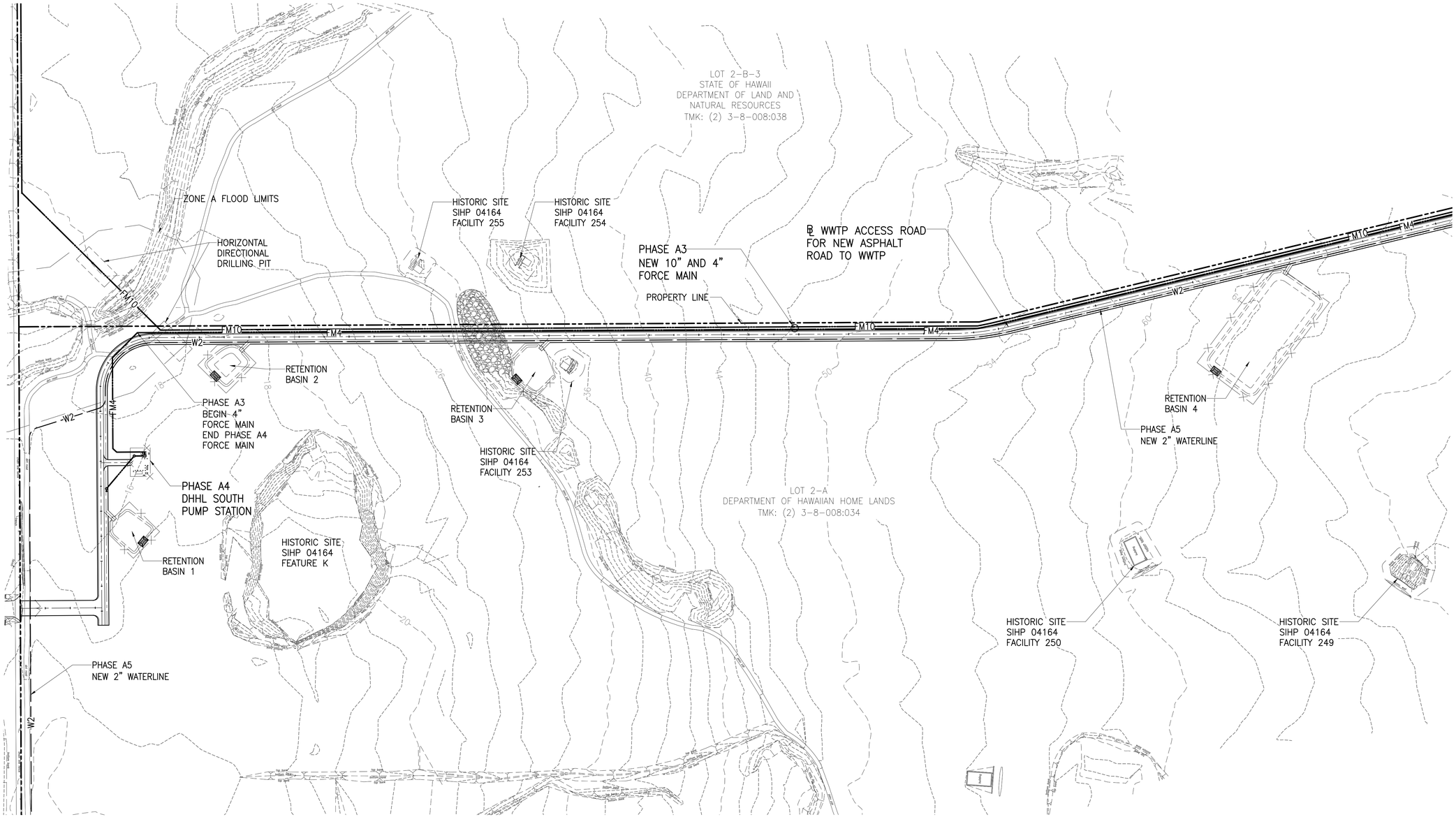

PHASE A3-FORCE MAIN SITE PLAN – 2

NORTH

SCALE: 1"=100'

AustinTsutsumi
& ASSOCIATES, INC.
CIVIL ENGINEERS I SURVEYORS
HONOLULU I WAILUKU I HILO, HAWAII

501 SUMNER STREET, SUITE 521
HONOLULU, HAWAII 96817

PHONE: 808-533-3646
FAX: 808-526-1267

STATE OF HAWAII
DEPARTMENT OF
HAWAIIAN HOME LANDS

PŪLEHUNUI
REGIONAL
INFRASTRUCTURE

AUSTIN, TSUTSUMI & ASSOC., INC.
ENGINEERS, SURVEYORS • HONOLULU, HAWAII

BRYAN H. KOBA
LICENSED PROFESSIONAL ENGINEER
No. 14948
HAWAII U.S.A.

This work was prepared by me or under my supervision and construction of this project will be under my observation. (Observation of construction as defined in Chapter 16-115 Subchapter 1 Definitions of the Hawaii Administrative Rules "Professional Engineers, Architects, Surveyors, and Landscape Architects.")

SIGNATURE APRIL 30, 2020
EXP. DATE OF THE LICENSE

0 1 2
LINE IS 2 INCHES AT FULL SIZE
(If NOT 2-inches : Scale Accordingly)

REVISION	DATE	BRIEF	BY

Project No:	16-576
Scale:	AS NOTED
Date:	1/31/2020
Designed By:	BHK
Drawn By:	BHK
Checked By:	

PHASE A3 FORCE MAIN
SITE PLAN – 2

DWG. NO.

CA3-2

SHEET 25 OF 201

FILE	POCKET	FOLDER	NO.

JOB NO. O-11-056.004
FN: Z:\2018\18-524 (16-576 PULEHUNUI NORTH SEWER_PHASE 6.3 WASTEWATER TREATMENT FACILITY) BRYAN\DWG\CA3-2 PHASE A3 FORCE MAIN SITE PLAN 2.DWG

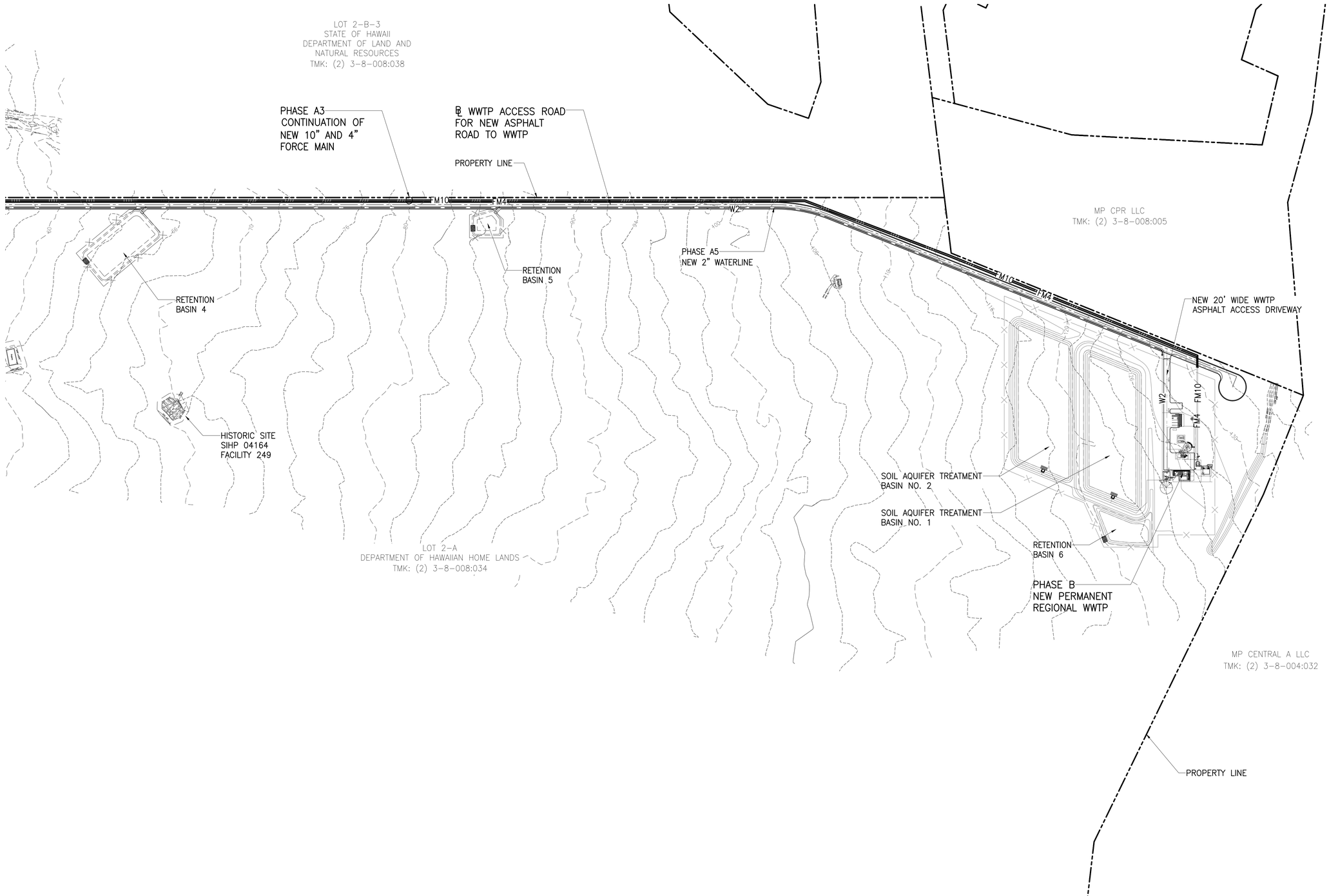

PHASE A3-FORCE MAIN SITE PLAN-3

SCALE: 1"=150'

AustinTsutsumi
& ASSOCIATES, INC.
CIVIL ENGINEERS I SURVEYORS
HONOLULU I WAILUKU I HILO, HAWAII

501 SUMNER STREET, SUITE 521
HONOLULU, HAWAII 96817

PHONE: 808-533-3646
FAX: 808-526-1267

STATE OF HAWAII
DEPARTMENT OF
HAWAIIAN HOME LANDS

PŪLEHUNUI
REGIONAL
INFRASTRUCTURE

AUSTIN, TSUTSUMI & ASSOC., INC.
ENGINEERS, SURVEYORS • HONOLULU, HAWAII

BRYAN H. KOBA
LICENSED PROFESSIONAL ENGINEER
No. 14948
HAWAII U.S.A.

This work was prepared by me or under my supervision and construction of this project will be under my observation. (Observation of construction as defined in Chapter 16-115 Subchapter 1 Definitions of the Hawaii Administrative Rules "Professional Engineers, Architects, Surveyors, and Landscape Architects.")

SIGNATURE — APRIL 30, 2020 EXP. DATE OF THE LICENSE

0 1 2
LINE IS 2 INCHES AT FULL SIZE
(If NOT 2-inches : Scale Accordingly)

REVISION	DATE	BRIEF	BY

Project No:	16-576
Scale:	AS NOTED
Date:	1/31/2020
Designed By:	BHK
Drawn By:	BHK
Checked By:	

PHASE A3 FORCE MAIN
SITE PLAN 3

DWG. NO.
CA3-3

SHEET 26 OF 201

FILE	POCKET	FOLDER	NO.

JOB NO. 0-11-056.004
FN: Z:\2018\18-524 (16-576 PULEHUNUI NORTH SEWER_PHASE 6.3 WASTEWATER TREATMENT FACILITY) BRYAN\DWG\CA3-3 PHASE A3 FORCE MAIN SITE PLAN 3.DWG

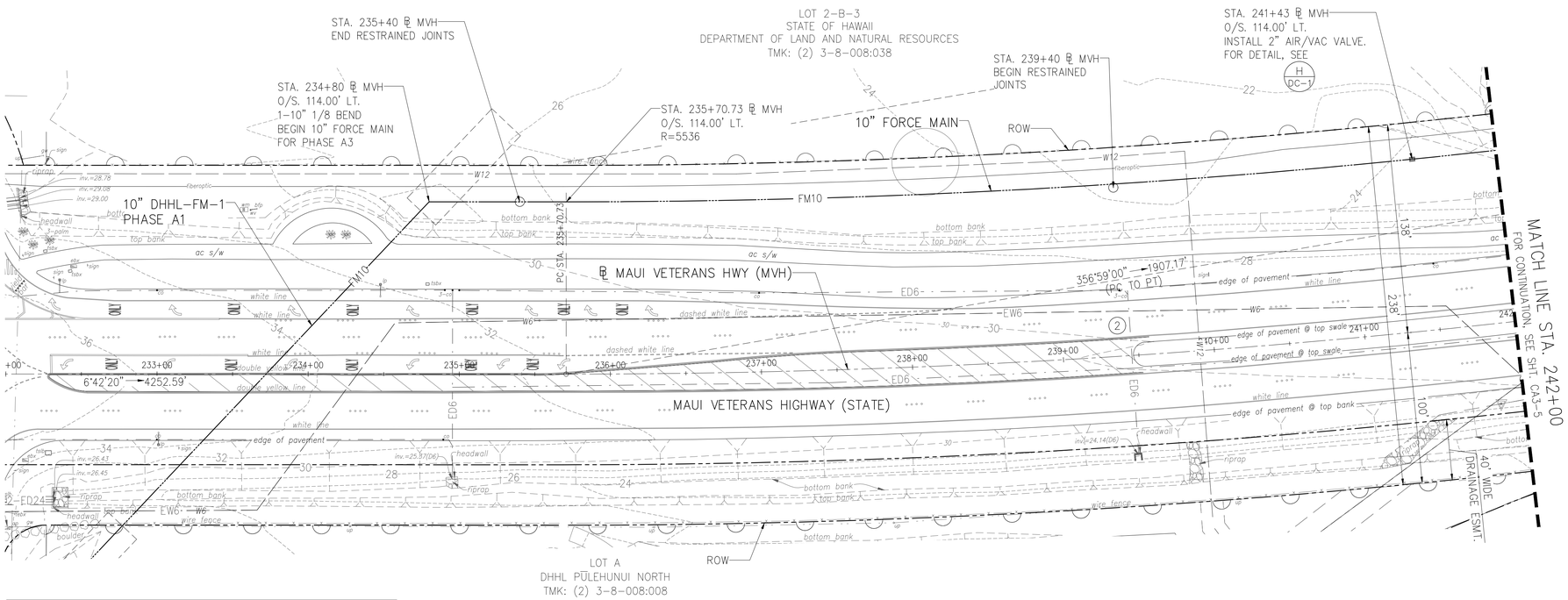

BASELINE CURVE DATA						
CURVE #	Δ	Δ/2	R	T	Ch	Lc
2	19°26'00"	9°43'00"	5650.00'	967.46'	1907.17'	1916.34'

NORTH

PLAN – FORCE MAIN STA. 232+00 TO 242+00

SCALE: 1"=40'

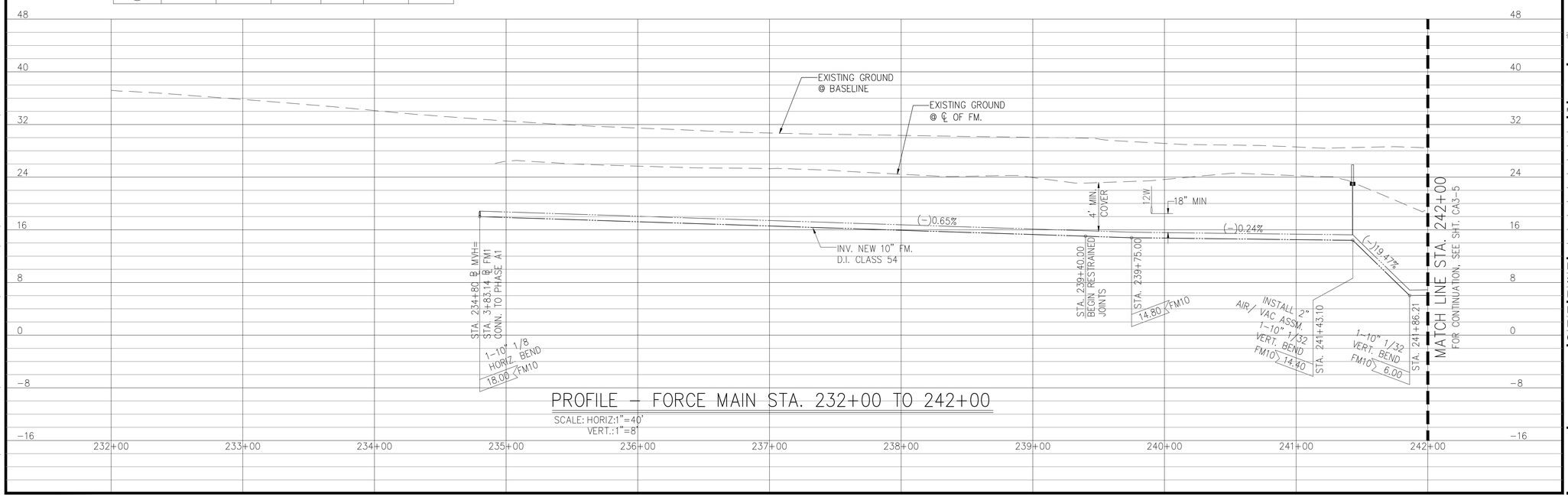

PROFILE – FORCE MAIN STA. 232+00 TO 242+00

SCALE: HORIZ:1"=40'
VERT.:1"=8'

AustinTsutsumi
& ASSOCIATES, INC.
CIVIL ENGINEERS I SURVEYORS
HONOLULU I WAILUKU I HILO, HAWAII

501 SUMNER STREET, SUITE 521
HONOLULU, HAWAII 96817

PHONE: 808-533-3646
FAX: 808-526-1267

STATE OF HAWAII
DEPARTMENT OF
HAWAIIAN HOME LANDS

PŪLEHUNUI
REGIONAL
INFRASTRUCTURE

AUSTIN, TSUTSUMI & ASSOC., INC.
ENGINEERS, SURVEYORS • HONOLULU, HAWAII

BRYAN H. KOBA
LICENSED PROFESSIONAL ENGINEER
No. 14948
HAWAII U.S.A.

This work was prepared by me or under my supervision and construction of this project will be under my observation. (Observation of construction as defined in Chapter 16-115 Subchapter 1 Definitions of the Hawaii Administrative Rules "Professional Engineers, Architects, Surveyors, and Landscape Architects.")

SIGNATURE — APRIL 30, 2020 EXP. DATE OF THE LICENSE

0 1 2
LINE IS 2 INCHES AT FULL SIZE
(If NOT 2-inches : Scale Accordingly)

REVISION	DATE	BRIEF	BY

Project No:	16-576
Scale:	AS NOTED
Date:	1/31/2020
Designed By:	BHK
Drawn By:	BHK
Checked By:	

PLAN AND PROFILE
FORCE MAIN STA 232+00
TO 242+00

DWG. NO.
CA3-4

SHEET 27 OF 201

FILE	POCKET	FOLDER	NO.

JOB NO. O-11-056.004
FN: C:\PROJECT FOLDER\16-576 DHHL PROJECT\ENGINEERING\DWG\CONSTRUCTION DRAWING SET\CA3-4 PP FORCE MAIN STA 232+00 TO STA 242+00.DWG

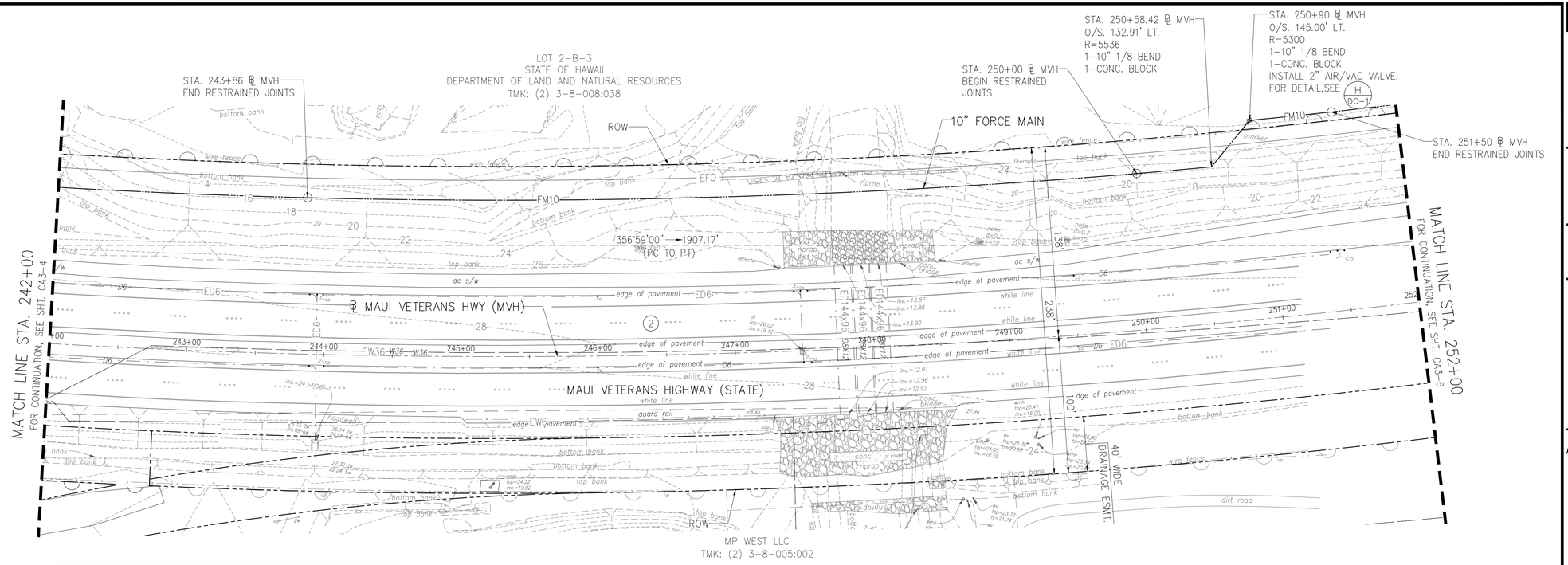

BASELINE CURVE DATA						
CURVE #	Δ	Δ/2	R	T	Ch	Lc
2	19°26'00"	9°43'00"	5650.00'	967.46'	1907.17'	1916.34'

PLAN – FORCE MAIN STA. 242+00 TO 252+00

SCALE: 1"=40'

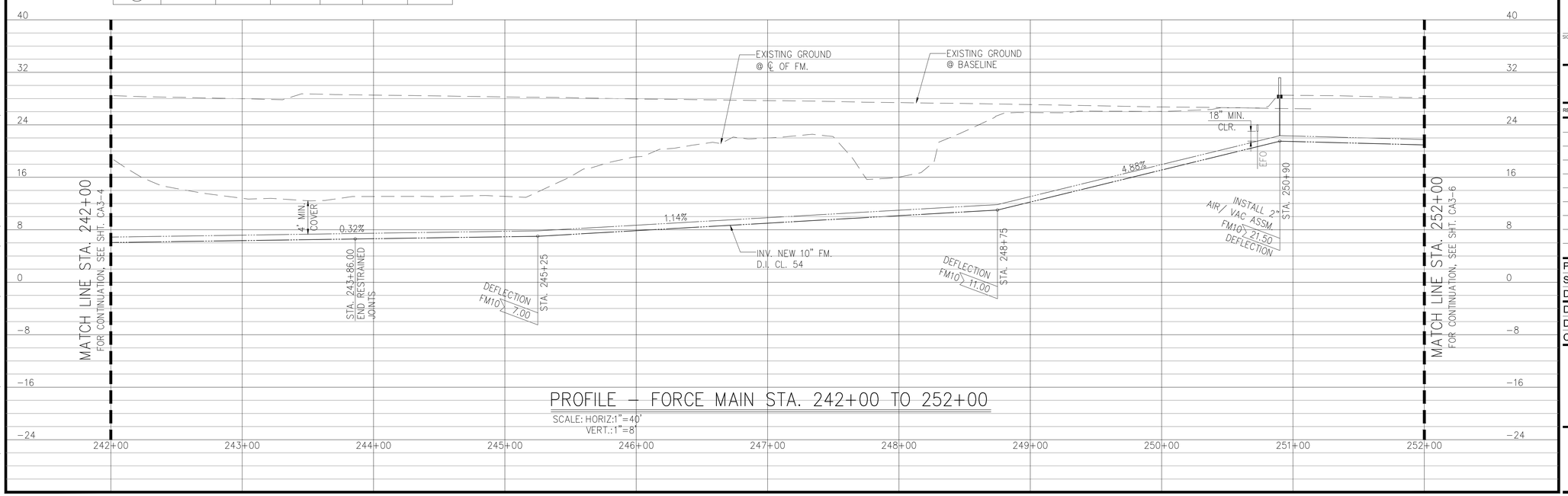

PROFILE – FORCE MAIN STA. 242+00 TO 252+00

SCALE: HORIZ:1"=40'
VERT.:1"=8'

AustinTsutsumi
& ASSOCIATES, INC.
CIVIL ENGINEERS I SURVEYORS
HONOLULU I WAILUKU I HILO, HAWAII

501 SUMNER STREET, SUITE 521
HONOLULU, HAWAII 96817

PHONE: 808-533-3646
FAX: 808-526-1267

STATE OF HAWAII
DEPARTMENT OF
HAWAIIAN HOME LANDS

PŪLEHUNUI
REGIONAL
INFRASTRUCTURE

AUSTIN, TSUTSUMI & ASSOC., INC.
ENGINEERS, SURVEYORS • HONOLULU, HAWAII

BRYAN H. KOBA
LICENSED PROFESSIONAL ENGINEER
No. 14948
HAWAII U.S.A.

This work was prepared by me or under my supervision and construction of this project will be under my observation. (Observation of construction as defined in Chapter 16-115 Subchapter 1 Definitions of the Hawaii Administrative Rules "Professional Engineers, Architects, Surveyors, and Landscape Architects.")

SIGNATURE APRIL 30, 2020
EXP. DATE OF THE LICENSE

0 1 2
LINE IS 2 INCHES AT FULL SIZE
(If NOT 2-inches : Scale Accordingly)

REVISION	DATE	BRIEF	BY

Project No:	16-576
Scale:	AS NOTED
Date:	1/31/2020
Designed By:	BHK
Drawn By:	BHK
Checked By:	

PLAN AND PROFILE
FORCE MAIN STA 242+00
TO 252+00

DWG. NO.
CA3-5

SHEET 28 OF 201

FILE	POCKET	FOLDER	NO.

JOB NO. 0-11-056.004
FN: C:\PROJECT FOLDER\16-576 DHHL PROJECT\ENGINEERING\DWG\CONSTRUCTION DRAWING SET\CA3-5 PP FORCE MAIN STA 242+00 TO STA 252+00.DWG

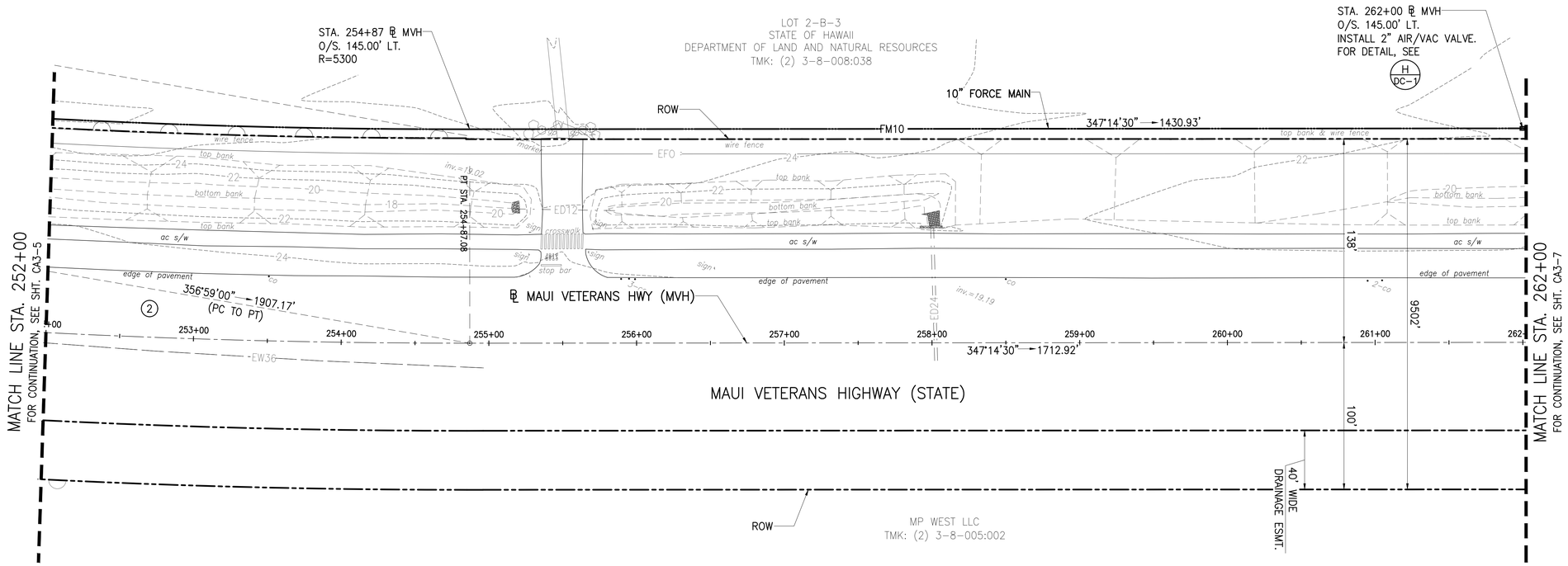

CURVE DATA TABLE						
CURVE #	Δ	Δ/2	R	T	Ch	Lc
2	19°26'00"	9°43'00"	5650.00'	967.46'	1907.17'	1916.34'

NORTH

PLAN – FORCE MAIN STA. 252+00 TO 262+00

SCALE: 1"=40'

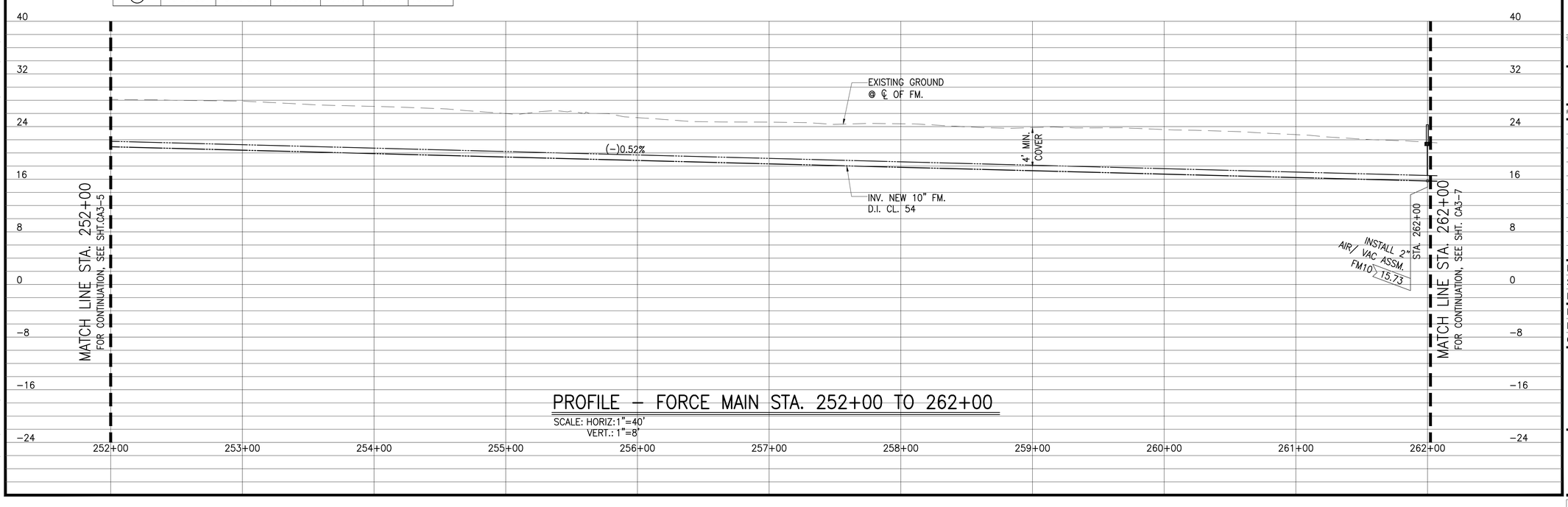

PROFILE – FORCE MAIN STA. 252+00 TO 262+00

SCALE: HORIZ: 1"=40'
VERT.: 1"=8'

AustinTsutsumi
& ASSOCIATES, INC.
CIVIL ENGINEERS I SURVEYORS
HONOLULU I WAILUKU I HILO, HAWAII

501 SUMNER STREET, SUITE 521
HONOLULU, HAWAII 96817

PHONE: 808-533-3646
FAX: 808-526-1267

STATE OF HAWAII
DEPARTMENT OF
HAWAIIAN HOME LANDS

PŪLEHUNUI
REGIONAL
INFRASTRUCTURE

AUSTIN, TSUTSUMI & ASSOC., INC.
ENGINEERS, SUVEYORS • HONOLULU, HAWAII

BRYAN H. KOBA
LICENSED PROFESSIONAL ENGINEER
No. 14948
HAWAII U.S.A.

This work was prepared by me or under my supervision and construction of this project will be under my observation. (Observation of construction as defined in Chapter 16-115 Subchapter 1 Definitions of the Hawaii Administrative Rules "Professional Engineers, Architects, Surveyors, and Landscape Architects.").

SIGNATURE — APRIL 30, 2020 EXP. DATE OF THE LICENSE

0 1 2
LINE IS 2 INCHES AT FULL SIZE
(If NOT 2-inches : Scale Accordingly)

REVISION	DATE	BRIEF	BY

Project No:	16-576
Scale:	AS NOTED
Date:	1/31/2020
Designed By:	BHK
Drawn By:	BHK
Checked By:	

PLAN AND PROFILE FORCE MAIN STA 252+00 TO 262+00

DWG. NO.

CA3-6

SHEET 29 OF 201

FILE	POCKET	FOLDER	NO.

JOB NO. 0-11-056.004
FN: Z:\2018\18-524 (16-576 PULEHUNUI NORTH SEWER_PHASE 6.3 WASTEWATER TREATMENT FACILITY) BRYAN\DWG\CA3-6 PPFORCE MAIN STA 252+00 TO STA 262+00.DWG

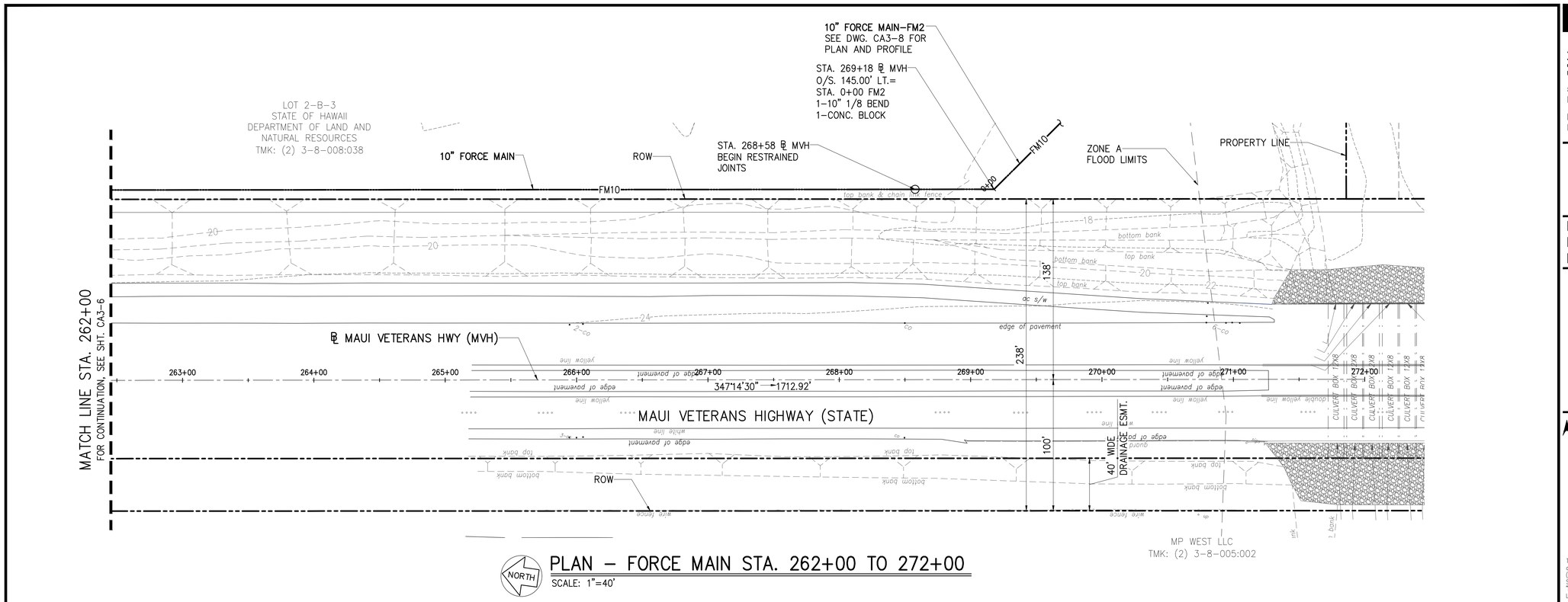

PLAN – FORCE MAIN STA. 262+00 TO 272+00

SCALE: 1"=40'

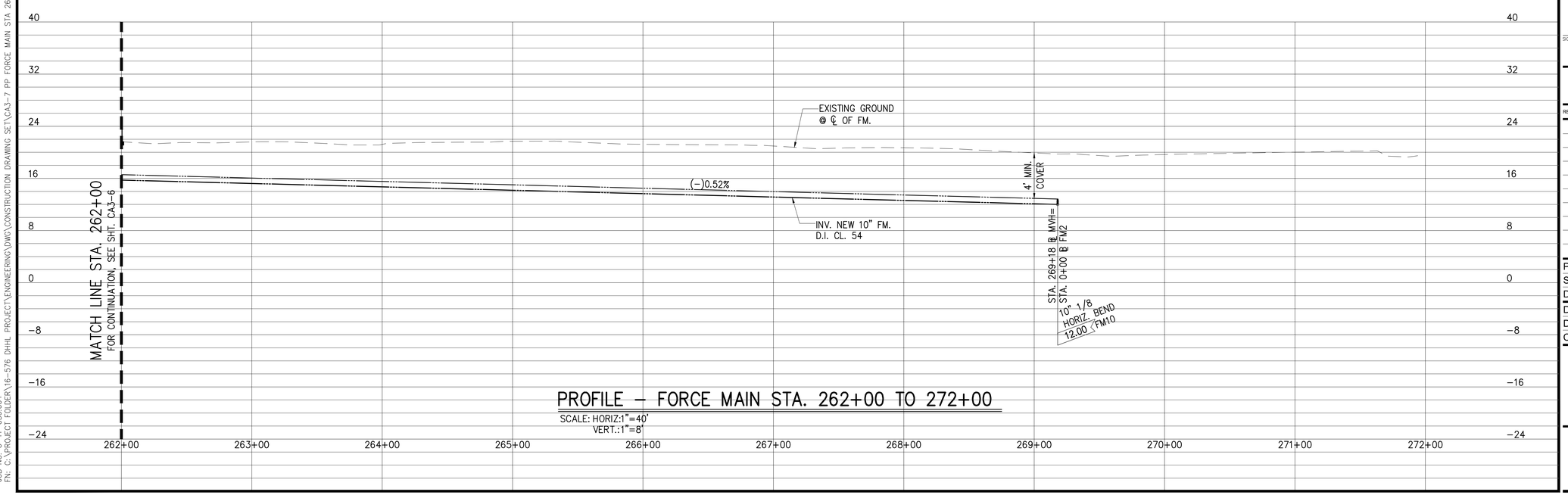

PROFILE – FORCE MAIN STA. 262+00 TO 272+00

SCALE: HORIZ:1"=40'
VERT.:1"=8'

AustinTsutsumi
& ASSOCIATES, INC.
CIVIL ENGINEERS I SURVEYORS
HONOLULU I WAILUKU I HILO, HAWAII

501 SUMNER STREET, SUITE 521
HONOLULU, HAWAII 96817

PHONE: 808-533-3646
FAX: 808-526-1267

STATE OF HAWAII
DEPARTMENT OF
HAWAIIAN HOME LANDS

PŪLEHUNUI
REGIONAL
INFRASTRUCTURE

AUSTIN, TSUTSUMI & ASSOC., INC.
ENGINEERS, SUVEYORS • HONOLULU, HAWAII

BRYAN H. KOBA
LICENSED PROFESSIONAL ENGINEER
No. 14948
HAWAII U.S.A.

This work was prepared by me or under my supervision and construction of this project will be under my observation. (Observation of construction as defined in Chapter 16-115 Subchapter 1 Definitions of the Hawaii Administrative Rules "Professional Engineers, Architects, Surveyors, and Landscape Architects.")

SIGNATURE APRIL 30, 2020
EXP. DATE OF THE LICENSE

0 1 2
LINE IS 2 INCHES AT FULL SIZE
(If NOT 2-inches : Scale Accordingly)

REVISION	DATE	BRIEF	BY

Project No:	16-576
Scale:	AS NOTED
Date:	1/31/2020
Designed By:	BHK
Drawn By:	BHK
Checked By:	

PLAN AND PROFILE
FORCE MAIN STA 262+00
TO 272+00

DWG. NO.

CA3-7

SHEET 30 OF 201

FILE	POCKET	FOLDER	NO.

JOB NO. O-11-056.004
FN: C:\PROJECT FOLDER\16-576 DHHL PROJECT\ENGINEERING\DWG\CONSTRUCTION DRAWING SET\CA3-7 PP FORCE MAIN STA 262+00 TO STA 272+00.DWG

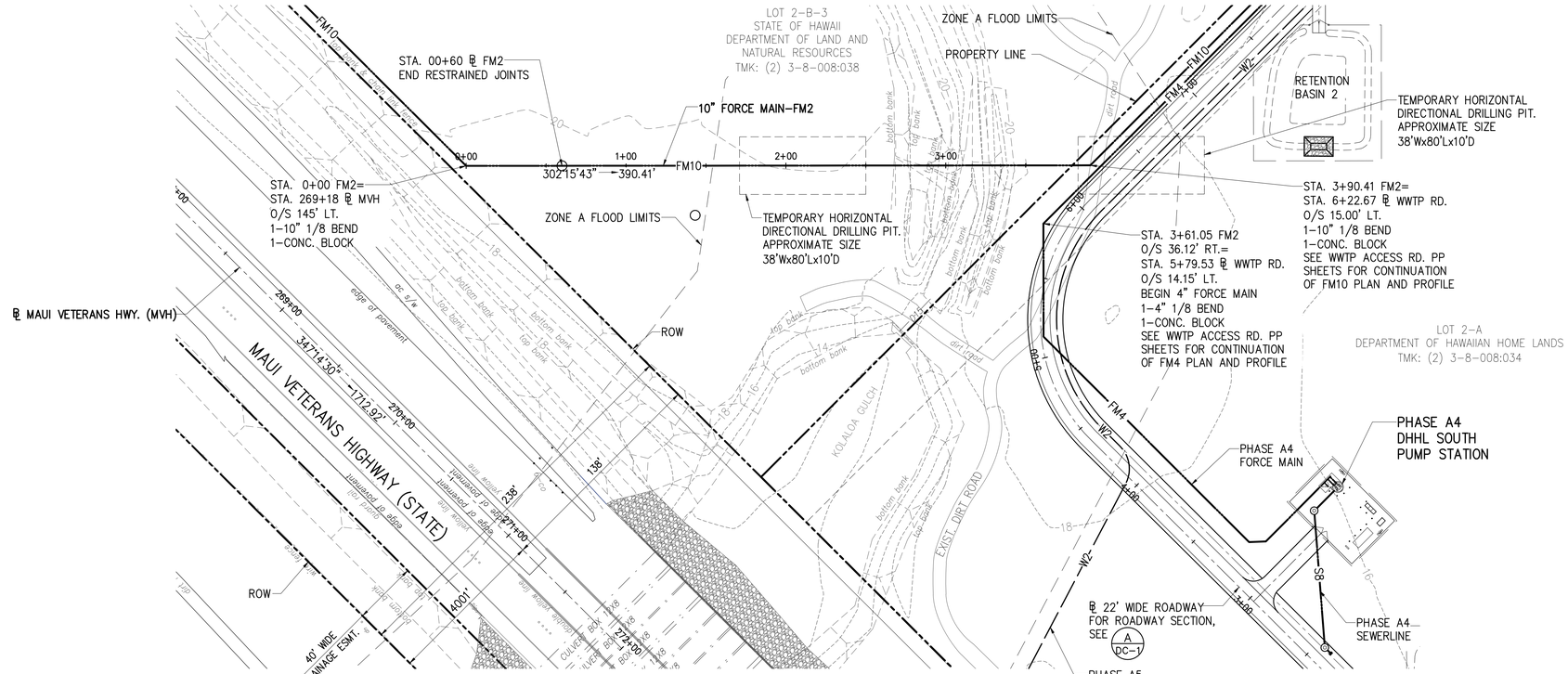

PLAN – FORCE MAIN-FM2 STA. 0+00 TO END

SCALE: 1"=40'

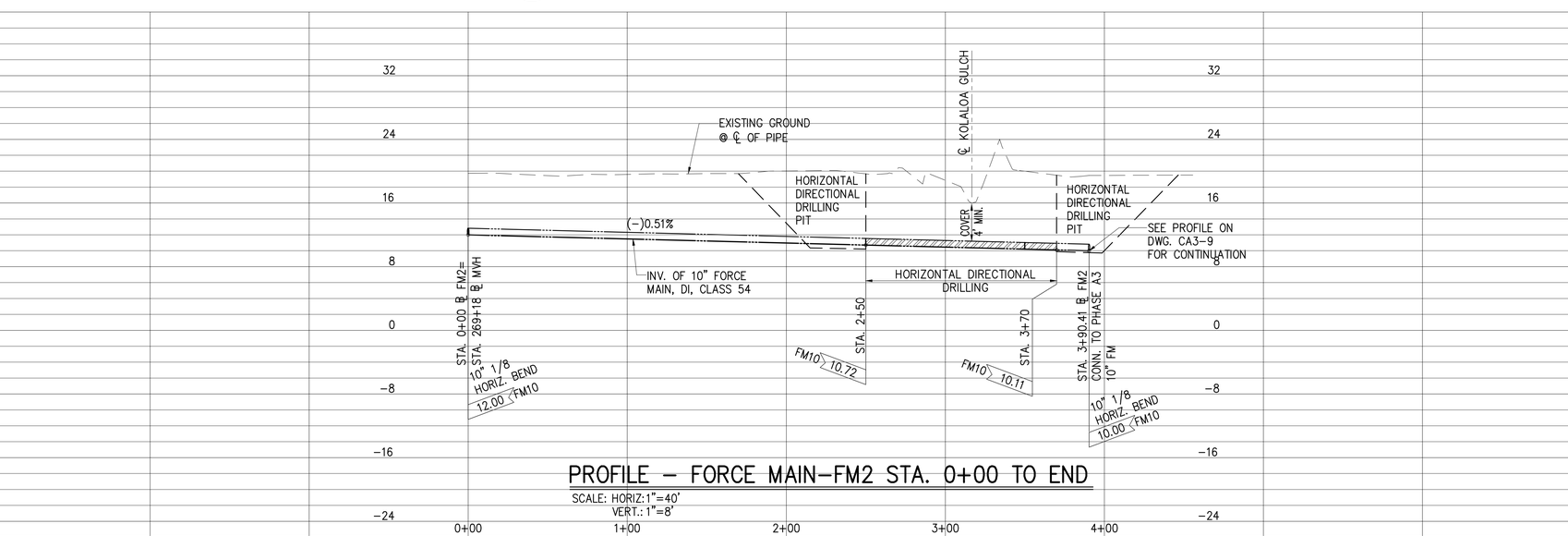

PROFILE – FORCE MAIN-FM2 STA. 0+00 TO END

SCALE: HORIZ:1"=40'
VERT.: 1"=8'

AustinTsutsumi
& ASSOCIATES, INC.
CIVIL ENGINEERS I SURVEYORS
HONOLULU I WAILUKU I HILO, HAWAII

501 SUMNER STREET, SUITE 521
HONOLULU, HAWAII 96817

PHONE: 808-533-3646
FAX: 808-526-1267

STATE OF HAWAII
DEPARTMENT OF
HAWAIIAN HOME LANDS

PŪLEHUNUI
REGIONAL
INFRASTRUCTURE

AUSTIN, TSUTSUMI & ASSOC., INC.
ENGINEERS, SURVEYORS • HONOLULU, HAWAII

BRYAN H. KOBA
LICENSED PROFESSIONAL ENGINEER
No. 14948
HAWAII U.S.A.

This work was prepared by me or under my supervision and construction of this project will be under my observation. (Observation of construction as defined in Chapter 16-115 Subchapter 1 Definitions of the Hawaii Administrative Rules "Professional Engineers, Architects, Surveyors, and Landscape Architects.")

SIGNATURE — APRIL 30, 2020 EXP. DATE OF THE LICENSE

0 1 2
LINE IS 2 INCHES AT FULL SIZE
(If NOT 2-inches : Scale Accordingly)

REVISION	DATE	BRIEF	BY

Project No:	16-576
Scale:	AS NOTED
Date:	1/31/2020
Designed By:	BHK
Drawn By:	BHK
Checked By:	

PLAN AND PROFILE
FORCE MAIN-FM2
STA 0+00 TO END

DWG. NO.

CA3-8

SHEET 31 OF 201

FILE	POCKET	FOLDER	NO.

JOB NO. O-11-056.004
FN: C:\PROJECT FOLDER\16-576 DHHL PROJECT\ENGINEERING\DWG\CONSTRUCTION DRAWING SET\CA3-8 PP FORCE MAIN-FM2 STA 0+00 TO END.DWG

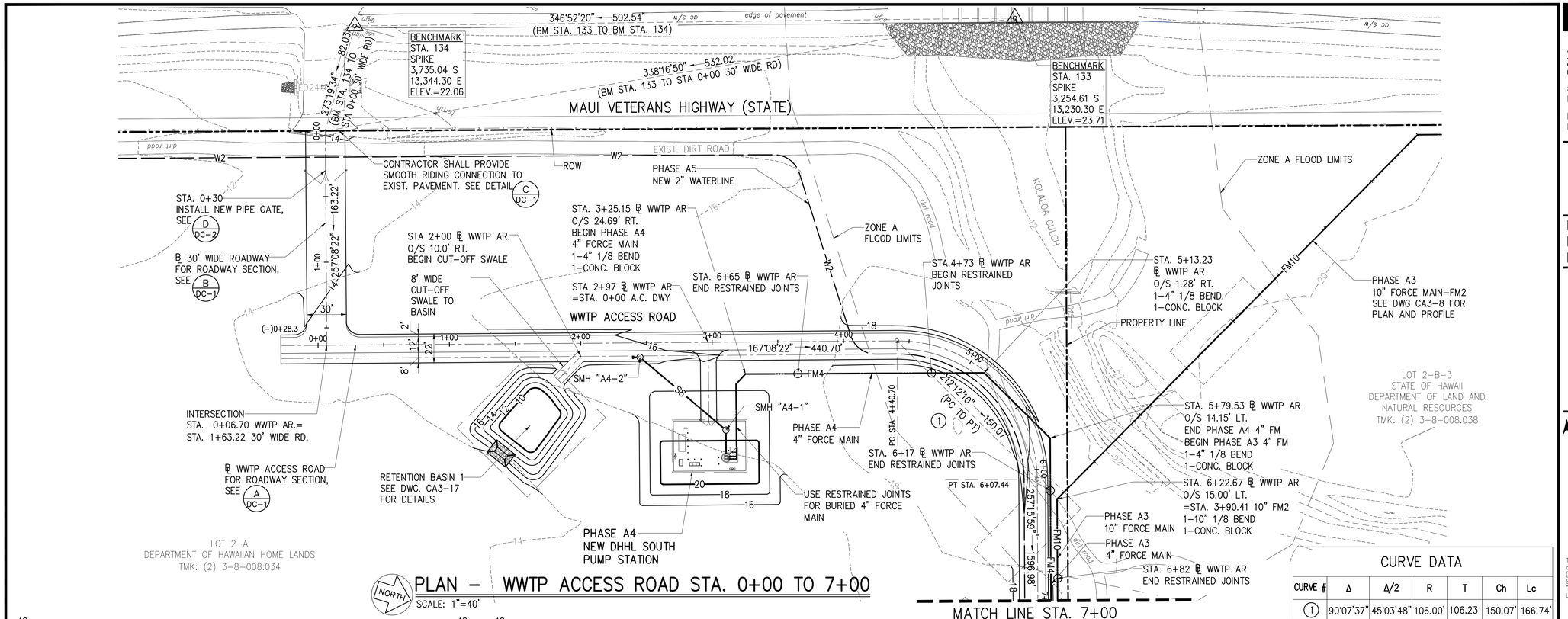

PLAN – WWTP ACCESS ROAD STA. 0+00 TO 7+00

SCALE: 1"=40'

MATCH LINE STA. 7+00
FOR CONTINUATION, SEE SHT. CA3-10

CURVE DATA

CURVE #	Δ	Δ/2	R	T	Ch	Lc
1	90°07'37"	45°03'48"	106.00'	106.23	150.07'	166.74'

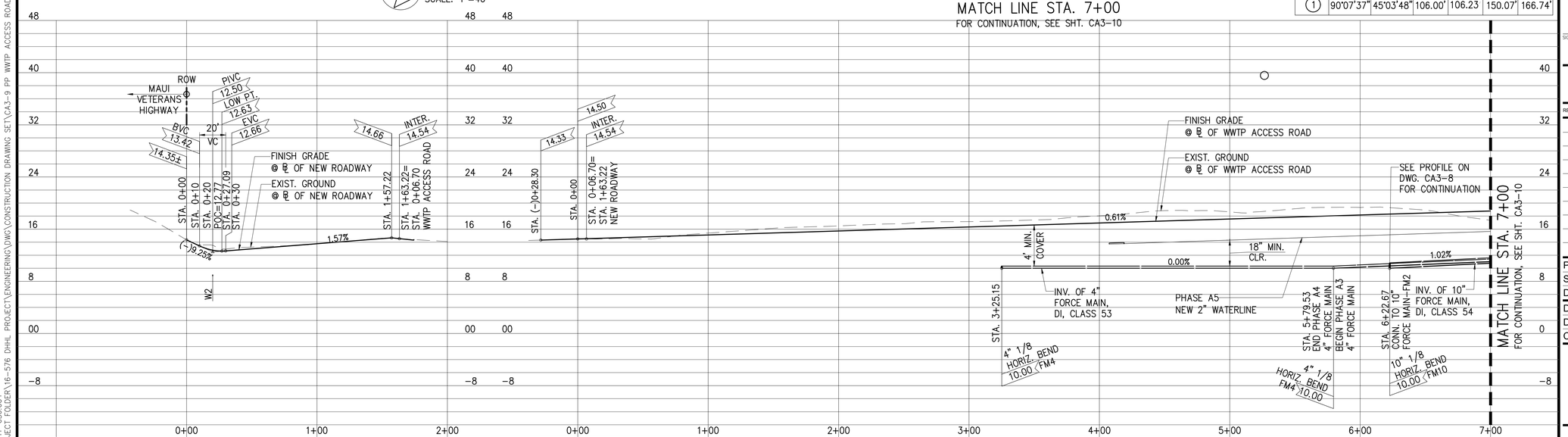

PROFILE – NEW 30' ROADWAY

SCALE: HORIZ:1"=40'
VERT.:1"=8'

PROFILE – WWTP ACCESS ROAD STA. 0+00 TO 7+00

SCALE: HORIZ:1"=40'
VERT.:1"=8'

AustinTsutsumi & ASSOCIATES, INC.
CIVIL ENGINEERS I SURVEYORS
HONOLULU I WAILUKU I HILO, HAWAII
501 SUMNER STREET, SUITE 521
HONOLULU, HAWAII 96817
PHONE: 808-533-3646
FAX: 808-526-1267

STATE OF HAWAII
DEPARTMENT OF HAWAIIAN HOME LANDS

PŪLEHUNUI REGIONAL INFRASTRUCTURE

AUSTIN, TSUTSUMI & ASSOC., INC.
ENGINEERS, SURVEYORS • HONOLULU, HAWAII

BRYAN H. KOBA
LICENSED PROFESSIONAL ENGINEER
No. 14948
HAWAII U.S.A.

This work was prepared by me or under my supervision and construction of this project will be under my observation. (Observation of construction as defined in Chapter 16-115 Subchapter 1 Definitions of the Hawaii Administrative Rules "Professional Engineers, Architects, Surveyors, and Landscape Architects.")

SIGNATURE — APRIL 30, 2020 EXP. DATE OF THE LICENSE

0 1 2
LINE IS 2 INCHES AT FULL SIZE
(IF NOT 2-inches : Scale Accordingly)

REVISION	DATE	BRIEF	BY

Project No:	16-576
Scale:	AS NOTED
Date:	1/31/2020
Designed By:	BHK
Drawn By:	BHK
Checked By:	

PLAN AND PROFILE WWTP ACCESS ROAD STA 0+00 TO 7+00

DWG. NO.
CA3-9

FILE	POCKET	FOLDER	NO.

JOB NO. 0-11-056.004
FN: C:\PROJECT FOLDER\16-576 DHHL PROJECT\ENGINEERING\DWG\CONSTRUCTION DRAWING SET\CA3-9 PP WWTP ACCESS ROAD STA 0+00 TO 7+00.DWG

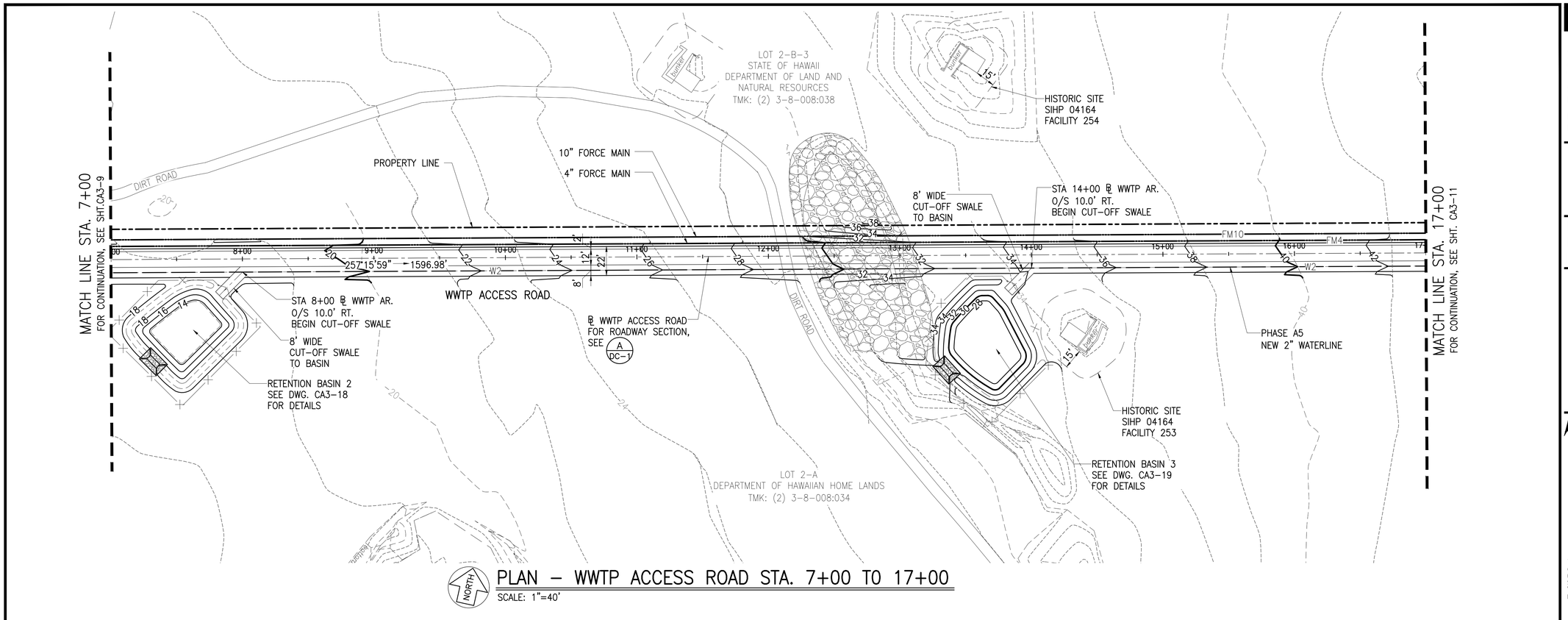

PLAN – WWTP ACCESS ROAD STA. 7+00 TO 17+00

SCALE: 1"=40'

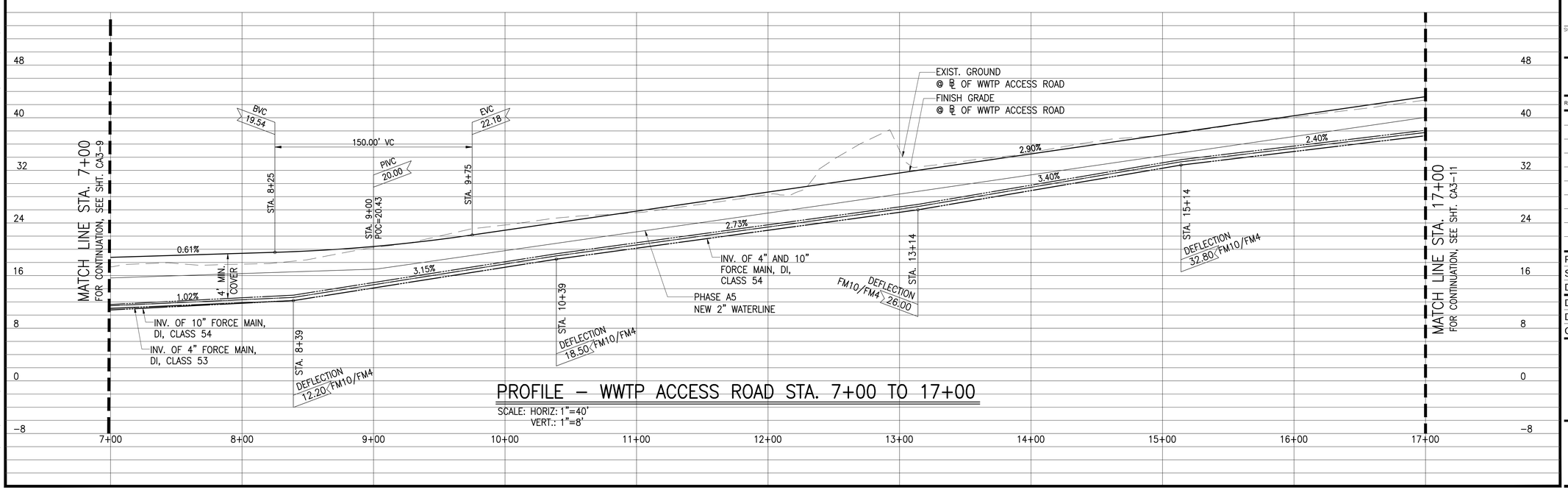

PROFILE – WWTP ACCESS ROAD STA. 7+00 TO 17+00

SCALE: HORIZ: 1"=40'
VERT.: 1"=8'

AustinTsutsumi
& ASSOCIATES, INC.
CIVIL ENGINEERS I SURVEYORS
HONOLULU I WAILUKU I HILO, HAWAII

501 SUMNER STREET, SUITE 521
HONOLULU, HAWAII 96817

PHONE: 808-533-3646
FAX: 808-526-1267

STATE OF HAWAII
DEPARTMENT OF
HAWAIIAN HOME LANDS

PŪLEHUNUI
REGIONAL
INFRASTRUCTURE

AUSTIN, TSUTSUMI & ASSOC., INC.
ENGINEERS, SURVEYORS • HONOLULU, HAWAII

BRYAN H. KOBA
LICENSED PROFESSIONAL ENGINEER
No. 14948
HAWAII U.S.A.

This work was prepared by me or under my supervision and construction of this project will be under my observation. (Observation of construction as defined in Chapter 16-115 Subchapter 1 Definitions of the Hawaii Administrative Rules "Professional Engineers, Architects, Surveyors, and Landscape Architects.")

SIGNATURE — APRIL 30, 2020 EXP. DATE OF THE LICENSE

0 1 2
LINE IS 2 INCHES AT FULL SIZE
(If NOT 2-inches : Scale Accordingly)

REVISION	DATE	BRIEF	BY

Project No:	16-576
Scale:	AS NOTED
Date:	1/31/2020
Designed By:	BHK
Drawn By:	BHK
Checked By:	

PLAN AND PROFILE
WWTP ACCESS ROAD
STA 7+00 TO 17+00

DWG. NO.
CA3-10

SHEET 33 OF 201

FILE	POCKET	FOLDER	NO.

JOB NO. O-11-056.004
FN: Z:\2018\18-524 (16-576 PULEHUNUI NORTH SEWER_PHASE 6.3 WASTEWATER TREATMENT FACILITY) BRYAN\DWG\CA3-10 PP WWTP ACCESS ROAD STA 7+00 TO 17+00.DWG

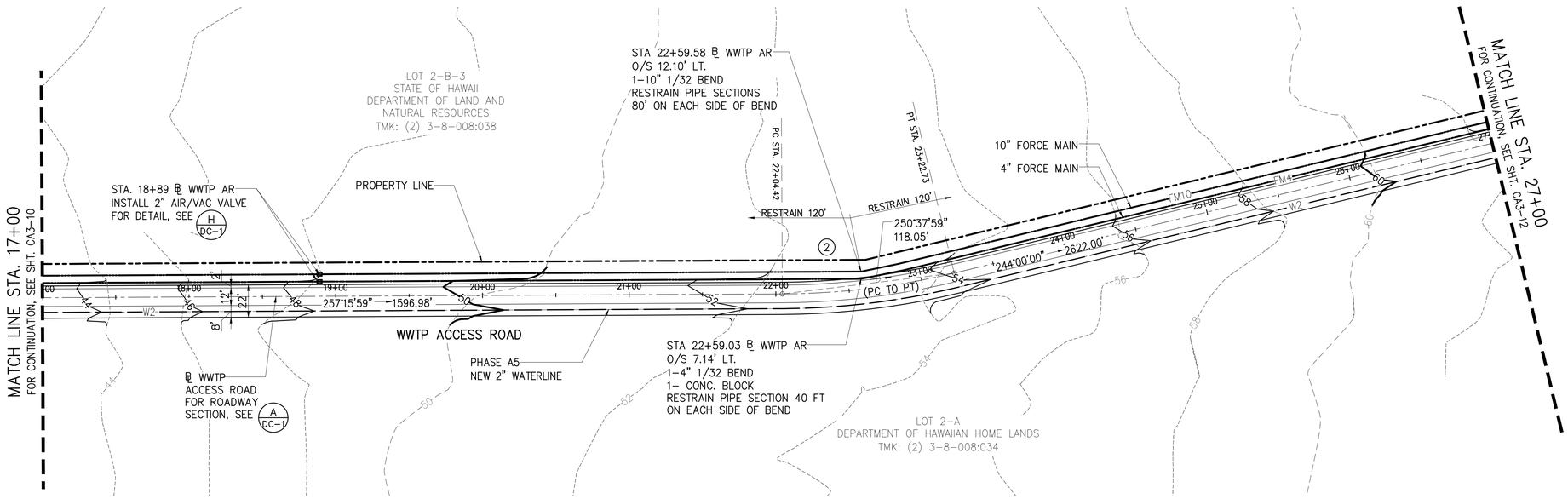

PLAN – WWTP ACCESS ROAD STA. 17+00 TO 27+00

SCALE: 1"=40'

CURVE DATA						
Curve #	Δ	Δ/2	R	T	Ch	Lc
2	13°15'59"	6°37'59"	511.00'	59.42'	118.05'	118.32'

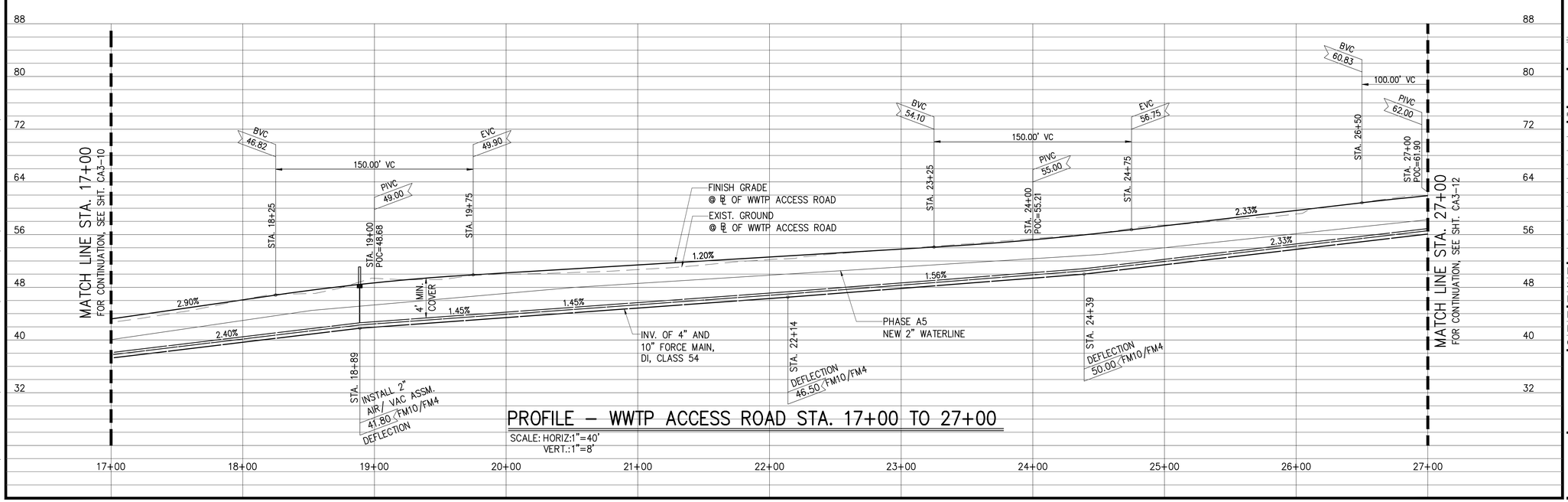

PROFILE – WWTP ACCESS ROAD STA. 17+00 TO 27+00

SCALE: HORIZ:1"=40'
VERT.:1"=8'

AustinTsutsumi
& ASSOCIATES, INC.
CIVIL ENGINEERS I SURVEYORS
HONOLULU I WAILUKU I HILO, HAWAII

501 SUMNER STREET, SUITE 521
HONOLULU, HAWAII 96817

PHONE: 808-533-3646
FAX: 808-526-1267

STATE OF HAWAII
DEPARTMENT OF
HAWAIIAN HOME LANDS

PŪLEHUNUI
REGIONAL
INFRASTRUCTURE

AUSTIN, TSUTSUMI & ASSOC., INC.
ENGINEERS, SUVEYORS • HONOLULU, HAWAII

BRYAN H. KOBA
LICENSED PROFESSIONAL ENGINEER
No. 14948
HAWAII U.S.A.

This work was prepared by me or under my supervision and construction of this project will be under my observation. (Observation of construction as defined in Chapter 16-115 Subchapter 1 Definitions of the Hawaii Administrative Rules "Professional Engineers, Architects, Surveyors, and Landscape Architects.")

SIGNATURE — APRIL 30, 2020 EXP. DATE OF THE LICENSE

0 1 2
LINE IS 2 INCHES AT FULL SIZE
(If NOT 2-inches : Scale Accordingly)

REVISION	DATE	BRIEF	BY

Project No:	16-576
Scale:	AS NOTED
Date:	1/31/2020
Designed By:	BHK
Drawn By:	BHK
Checked By:	

PLAN AND PROFILE WWTP ACCESS ROAD STA 17+00 TO 27+00

DWG. NO.

CA3-11

SHEET 34 OF 201

FILE	POCKET	FOLDER	NO.

JOB NO. O-11-056.004
FN: C:\PROJECT FOLDER\16-576 DHHL PROJECT\ENGINEERING\DWG\CONSTRUCTION DRAWING SET\CA3-11 PP WWTP ACCESS ROAD STA 17+00 TO 27+00.DWG

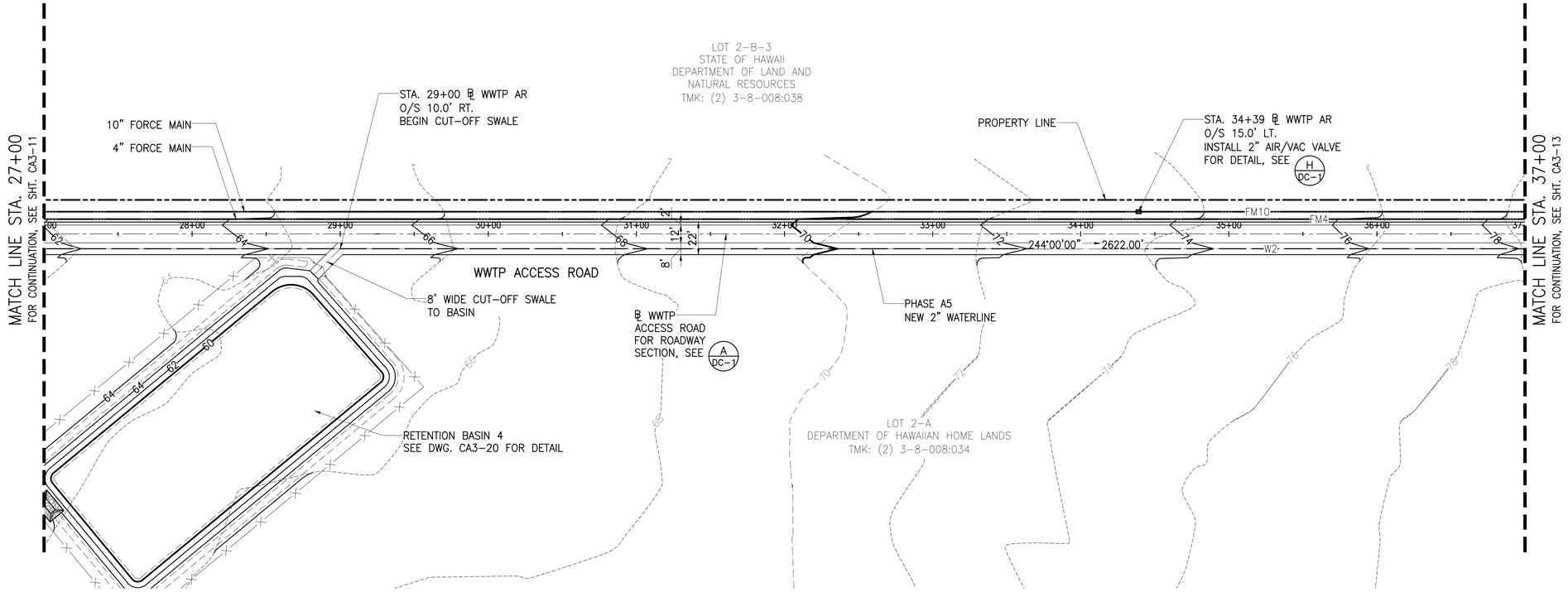

PLAN – WWTP ACCESS ROAD STA. 27+00 TO 37+00

SCALE: 1"=40'

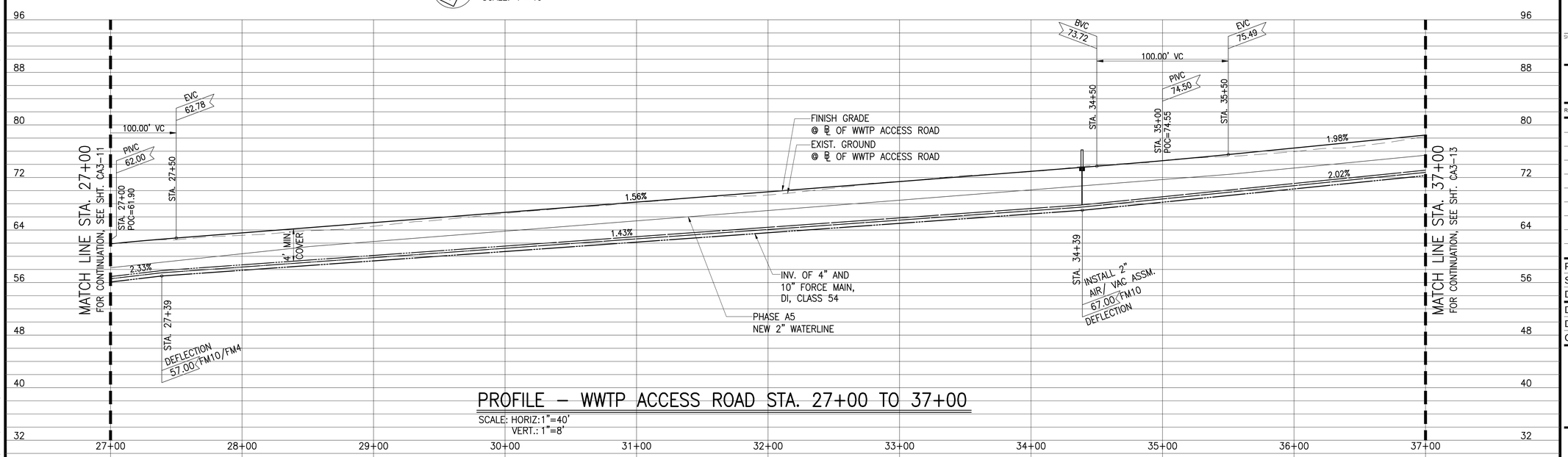

PROFILE – WWTP ACCESS ROAD STA. 27+00 TO 37+00

SCALE: HORIZ: 1"=40'
VERT.: 1"=8'

AustinTsutsumi
& ASSOCIATES, INC.
CIVIL ENGINEERS I SURVEYORS
HONOLULU I WAILUKU I HILO, HAWAII

501 SUMNER STREET, SUITE 521
HONOLULU, HAWAII 96817

PHONE: 808-533-3646
FAX: 808-526-1267

STATE OF HAWAII
DEPARTMENT OF
HAWAIIAN HOME LANDS

PŪLEHUNUI
REGIONAL
INFRASTRUCTURE

AUSTIN, TSUTSUMI & ASSOC., INC.
ENGINEERS, SURVEYORS • HONOLULU, HAWAII

BRYAN H. KOBA
LICENSED PROFESSIONAL ENGINEER
No. 14948
HAWAII U.S.A.

This work was prepared by me or under my supervision and construction of this project will be under my observation. (Observation of construction as defined in Chapter 16-115 Subchapter 1 Definitions of the Hawaii Administrative Rules "Professional Engineers, Architects, Surveyors, and Landscape Architects.")

SIGNATURE — APRIL 30, 2020 EXP. DATE OF THE LICENSE

0 1 2
LINE IS 2 INCHES AT FULL SIZE
(If NOT 2-inches : Scale Accordingly)

REVISION	DATE	BRIEF	BY

Project No:	16-576
Scale:	AS NOTED
Date:	1/31/2020
Designed By:	BHK
Drawn By:	BHK
Checked By:	

PLAN AND PROFILE WWTP ACCESS ROAD STA 27+00 TO 37+00

DWG. NO.

CA3-12

SHEET 35 OF 201

FILE	POCKET	FOLDER	NO.

JOB NO. 0-11-056.004
FN: Z:\2018\18-524 (16-576 PULEHUNUI NORTH SEWER_PHASE 6.3 WASTEWATER TREATMENT FACILITY) BRYAN\DWG\CA3-12 PP WWTP ACCESS ROAD STA 27+00 TO 37+00.DWG

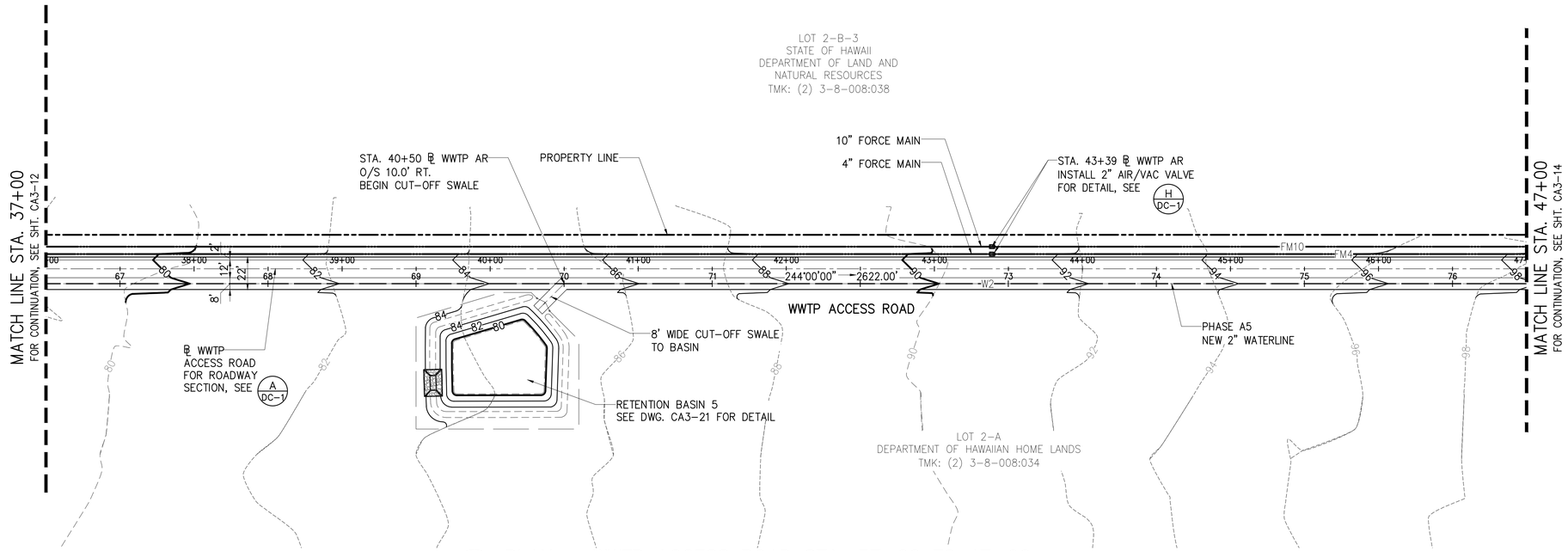

PLAN – WWTP ACCESS ROAD STA. 37+00 TO 47+00

SCALE: 1"=40'

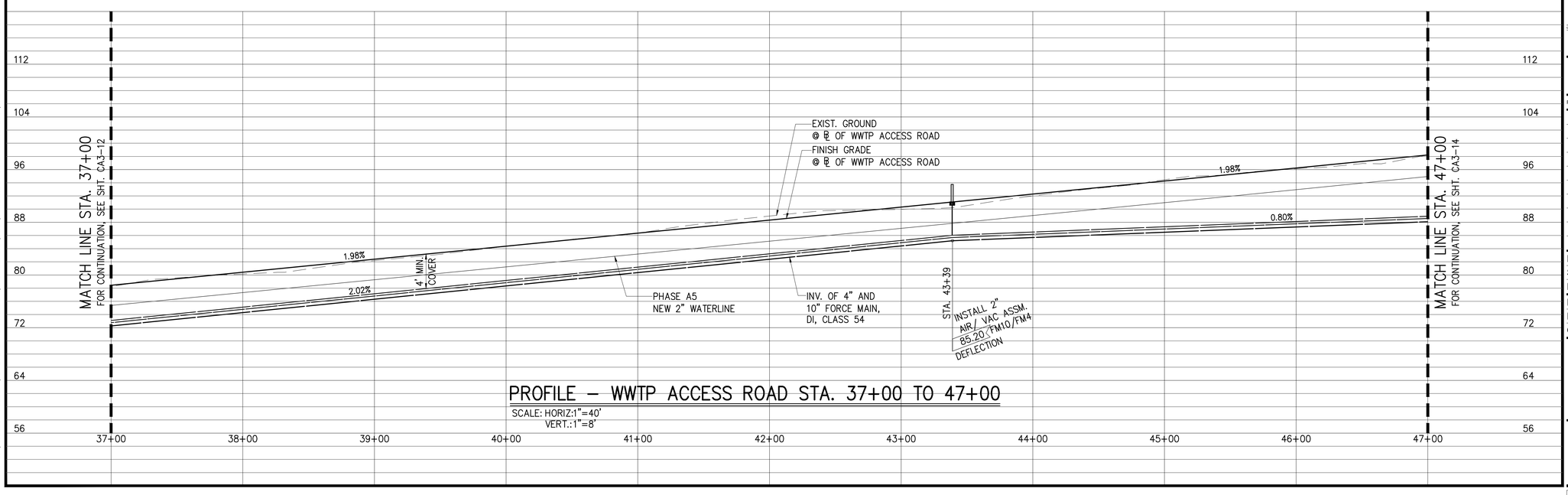

PROFILE – WWTP ACCESS ROAD STA. 37+00 TO 47+00

SCALE: HORIZ:1"=40'
VERT.:1"=8'

AustinTsutsumi
& ASSOCIATES, INC.
CIVIL ENGINEERS I SURVEYORS
HONOLULU I WAILUKU I HILO, HAWAII

501 SUMNER STREET, SUITE 521
HONOLULU, HAWAII 96817

PHONE: 808-533-3646
FAX: 808-526-1267

STATE OF HAWAII
DEPARTMENT OF
HAWAIIAN HOME LANDS

PŪLEHUNUI
REGIONAL
INFRASTRUCTURE

AUSTIN, TSUTSUMI & ASSOC., INC.
ENGINEERS, SUVEYORS • HONOLULU, HAWAII

BRYAN H. KOBA
LICENSED PROFESSIONAL ENGINEER
No. 14948
HAWAII U.S.A.

This work was prepared by me or under my supervision and construction of this project will be under my observation. (Observation of construction as defined in Chapter 16-115 Subchapter 1 Definitions of the Hawaii Administrative Rules "Professional Engineers, Architects, Surveyors, and Landscape Architects.")

SIGNATURE — APRIL 30, 2020 EXP. DATE OF THE LICENSE

0 1 2
LINE IS 2 INCHES AT FULL SIZE
(IF NOT 2-inches : Scale Accordingly)

REVISION	DATE	BRIEF	BY

Project No:	16-576
Scale:	AS NOTED
Date:	1/31/2020
Designed By:	BHK
Drawn By:	BHK
Checked By:	

PLAN AND PROFILE WWTP ACCESS ROAD STA 37+00 TO 47+00

DWG. NO.

CA3-13

SHEET 36 OF 201

FILE	POCKET	FOLDER	NO.

JOB NO. 0-11-056.004
FN: C:\PROJECT FOLDER\16-576 DHHL PROJECT\ENGINEERING\DWG\CONSTRUCTION DRAWING SET\CA3-13 PP WWTP ACCESS ROAD STA 37+00 TO 47+00.DWG

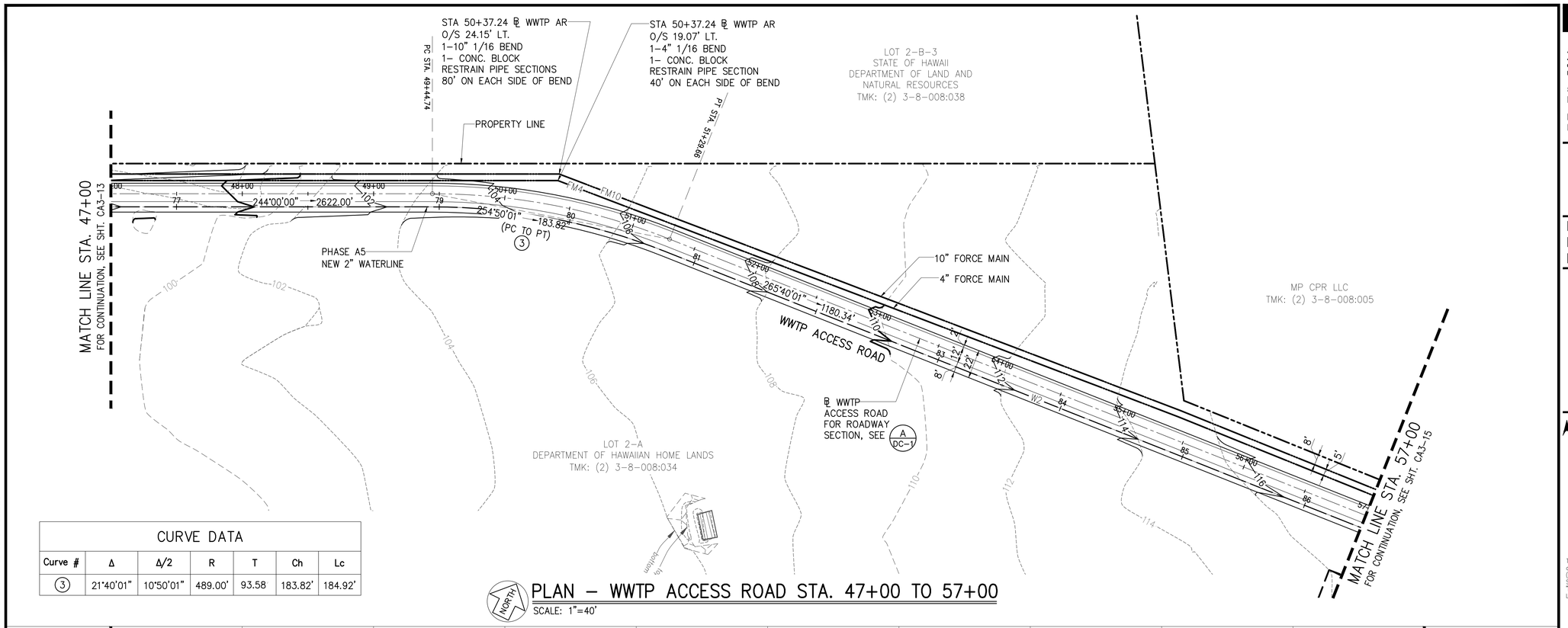

PLAN – WWTP ACCESS ROAD STA. 47+00 TO 57+00

SCALE: 1"=40'

CURVE DATA						
Curve #	Δ	Δ/2	R	T	Ch	Lc
3	21°40'01"	10°50'01"	489.00'	93.58	183.82'	184.92'

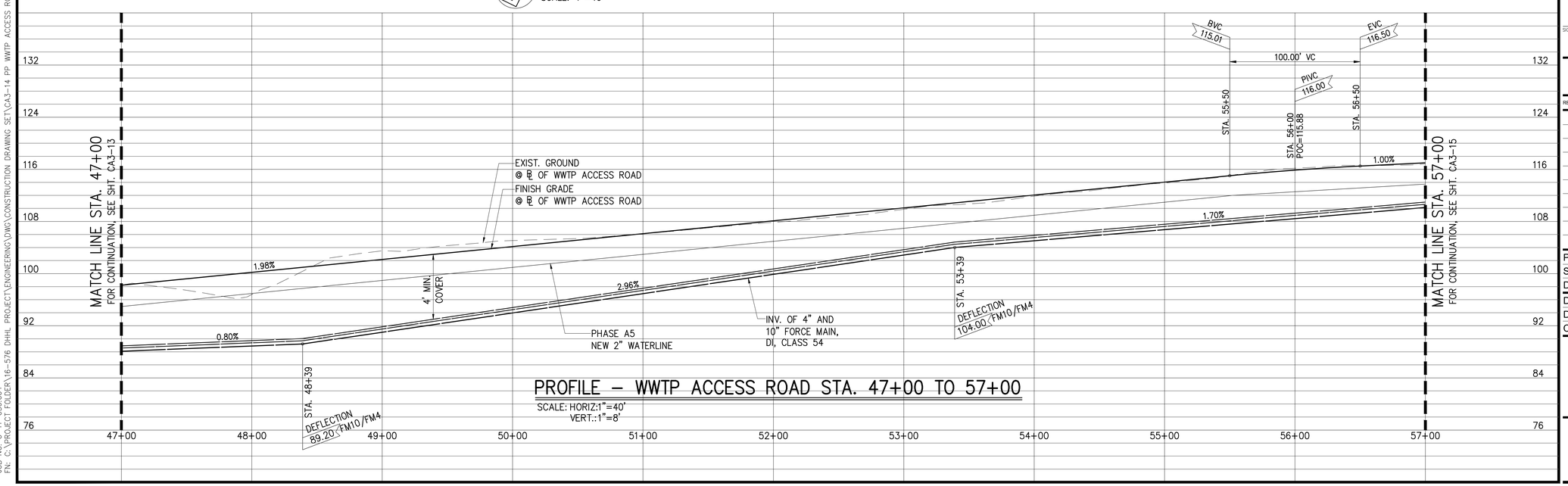

PROFILE – WWTP ACCESS ROAD STA. 47+00 TO 57+00

SCALE: HORIZ:1"=40'
VERT.:1"=8'

AustinTsutsumi
& ASSOCIATES, INC.
CIVIL ENGINEERS I SURVEYORS
HONOLULU I WAILUKU I HILO, HAWAII

501 SUMNER STREET, SUITE 521
HONOLULU, HAWAII 96817

PHONE: 808-533-3646
FAX: 808-526-1267

STATE OF HAWAII
DEPARTMENT OF
HAWAIIAN HOME LANDS

PŪLEHUNUI
REGIONAL
INFRASTRUCTURE

AUSTIN, TSUTSUMI & ASSOC., INC.
ENGINEERS, SURVEYORS • HONOLULU, HAWAII

BRYAN H. KOBA
LICENSED PROFESSIONAL ENGINEER
No. 14948
HAWAII U.S.A.

This work was prepared by me or under my supervision and construction of this project will be under my observation. (Observation of construction as defined in Chapter 16-115 Subchapter 1 Definitions of the Hawaii Administrative Rules "Professional Engineers, Architects, Surveyors, and Landscape Architects.")

SIGNATURE — APRIL 30, 2020 EXP. DATE OF THE LICENSE

0 1 2
LINE IS 2 INCHES AT FULL SIZE
(If NOT 2-inches : Scale Accordingly)

REVISION	DATE	BRIEF	BY

Project No:	16-576
Scale:	AS NOTED
Date:	1/31/2020
Designed By:	BHK
Drawn By:	BHK
Checked By:	

PLAN AND PROFILE WWTP ACCESS ROAD STA 47+00 TO 57+00

DWG. NO.

CA3-14

SHEET 37 OF 201

FILE	POCKET	FOLDER	NO.

JOB NO. O-11-056.004
FN: C:\PROJECT FOLDER\16-576 DHHL PROJECT\ENGINEERING\DWG\CONSTRUCTION DRAWING SET\CA3-14 PP WWTP ACCESS ROAD STA 47+00 TO 57+00.DWG

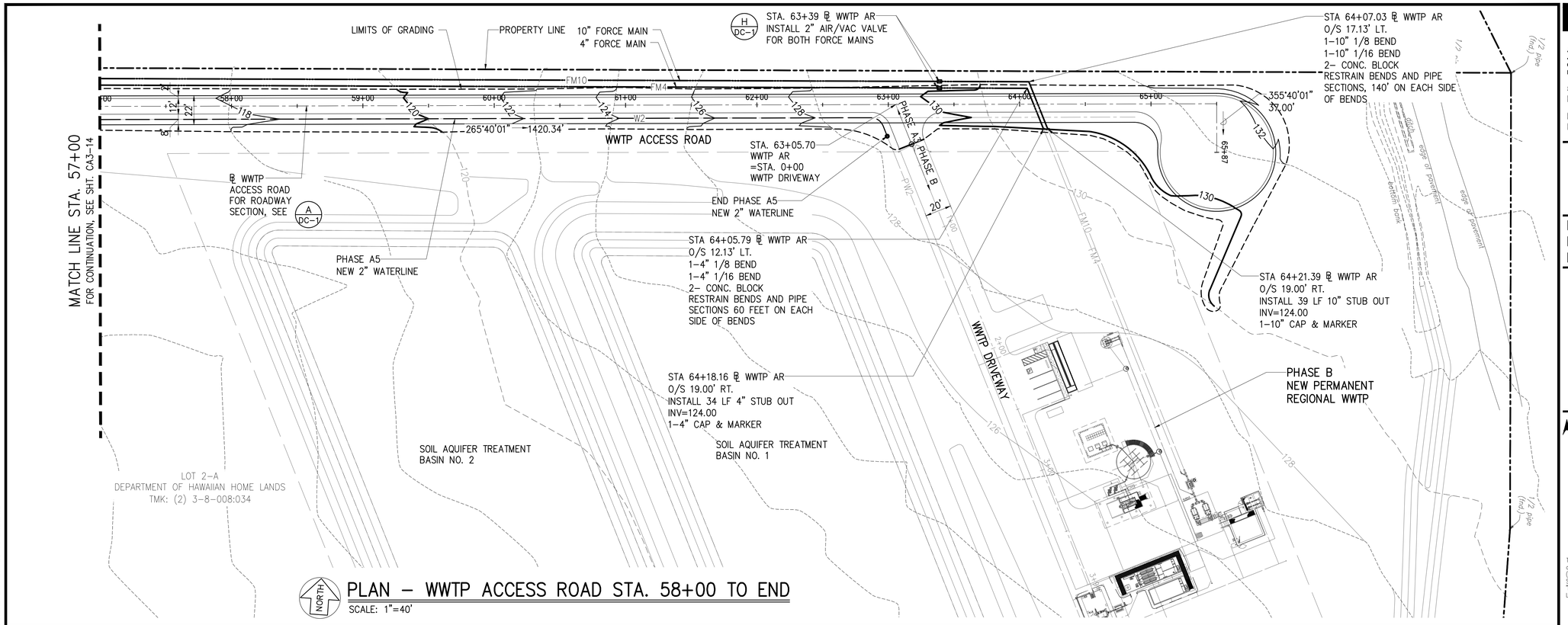

PLAN – WWTP ACCESS ROAD STA. 58+00 TO END

SCALE: 1"=40'

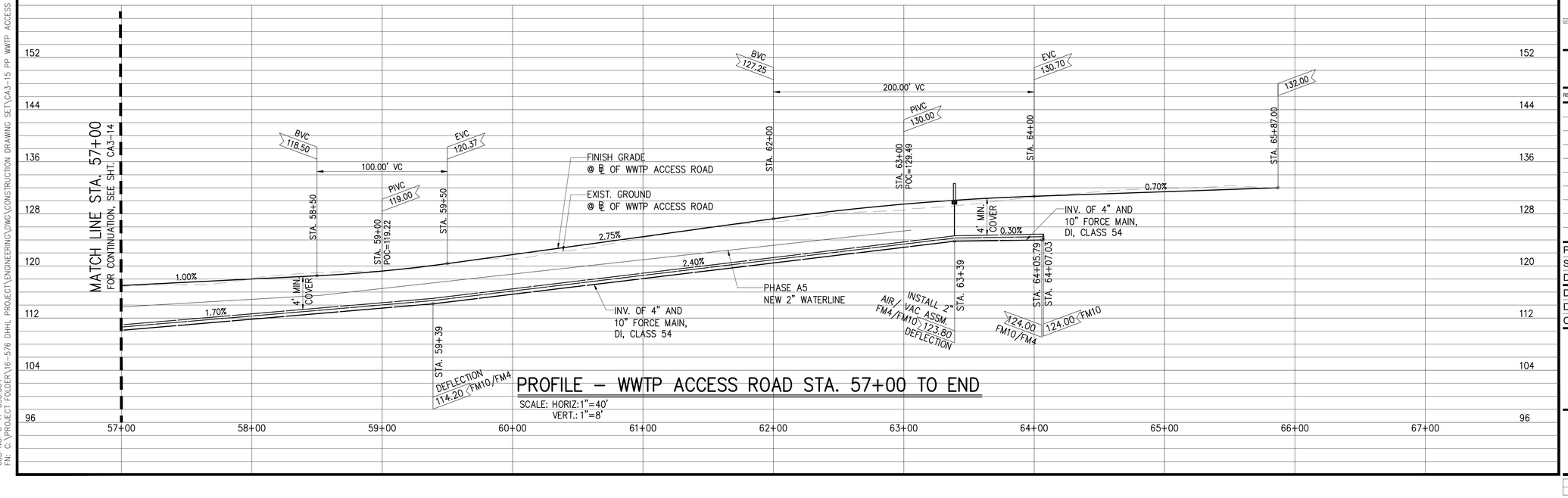

PROFILE – WWTP ACCESS ROAD STA. 57+00 TO END

SCALE: HORIZ: 1"=40'
VERT.: 1"=8'

JOB NO. O-11-056.004
FN: C:\PROJECT FOLDER\16-576 DHHL PROJECT\ENGINEERING\DWG\CONSTRUCTION DRAWING SET\CA3-15 PP WWTP ACCESS ROAD STA 57+00 TO END.DWG

AustinTsutsumi
& ASSOCIATES, INC.
CIVIL ENGINEERS I SURVEYORS
HONOLULU I WAILUKU I HILO, HAWAII
501 SUMNER STREET, SUITE 521
HONOLULU, HAWAII 96817
PHONE: 808-533-3646
FAX: 808-526-1267

STATE OF HAWAII
DEPARTMENT OF
HAWAIIAN HOME LANDS

PŪLEHUNUI
REGIONAL
INFRASTRUCTURE

AUSTIN, TSUTSUMI & ASSOC., INC.
ENGINEERS, SUVEYORS • HONOLULU, HAWAII

BRYAN H. KOBA
LICENSED PROFESSIONAL ENGINEER
No. 14948
HAWAII U.S.A.

This work was prepared by me or under my supervision and construction of this project will be under my observation. (Observation of construction as defined in Chapter 16-115 Subchapter 1 Definitions of the Hawaii Administrative Rules "Professional Engineers, Architects, Surveyors, and Landscape Architects.")

SIGNATURE — APRIL 30, 2020 EXP. DATE OF THE LICENSE

0 1 2
LINE IS 2 INCHES AT FULL SIZE
(If NOT 2-inches : Scale Accordingly)

REVISION	DATE	BRIEF	BY

Project No:	16-576
Scale:	AS NOTED
Date:	1/31/2020
Designed By:	BHK
Drawn By:	BHK
Checked By:	

PLAN AND PROFILE
WWTP ACCESS ROAD
STA 57+00 TO END

DWG. NO.
CA3-15

SHEET 38 OF 201

FILE	POCKET	FOLDER	NO.

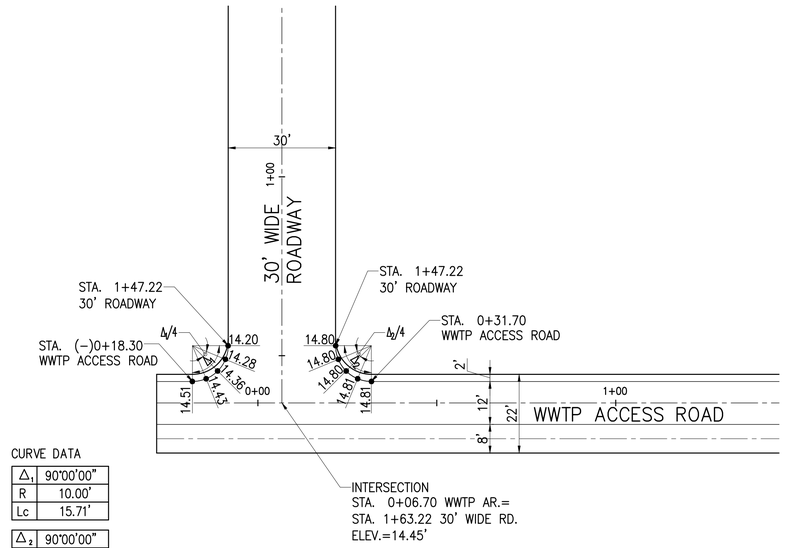

CURVE DATA

Δ_1	90°00'00"
R	10.00'
Lc	15.71'

Δ_2	90°00'00"
R	10.00'
Lc	15.71'

PHASE A3 – CURVE RETURN–WWTP ACCESS RD & 30' WIDE ROADWAY

SCALE: 1"=20'

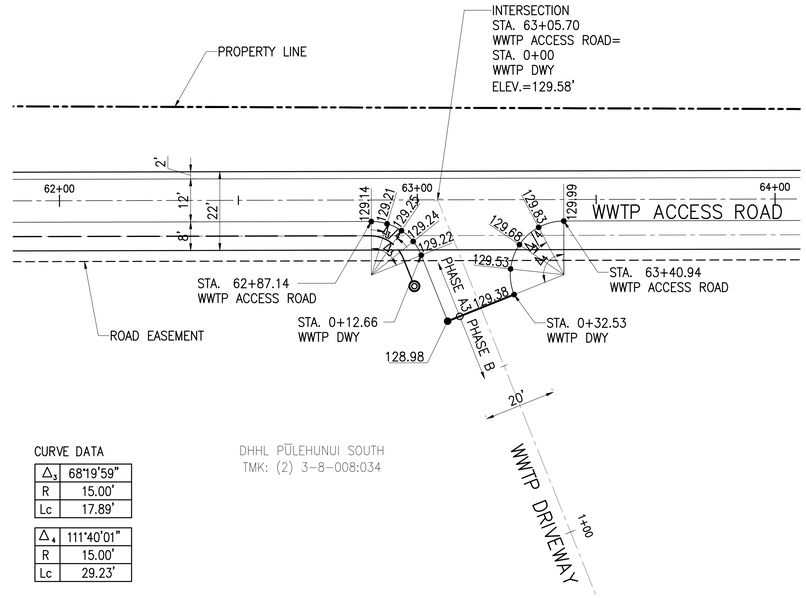

CURVE DATA

Δ_3	68°19'59"
R	15.00'
Lc	17.89'

Δ_4	111°40'01"
R	15.00'
Lc	29.23'

DHHL PŪLEHUNUI SOUTH
TMK: (2) 3-8-008:034

PHASE A3 – CURVE RETURN–WWTP ACCESS RD & WWTP DRIVEWAY

SCALE: 1"=20'

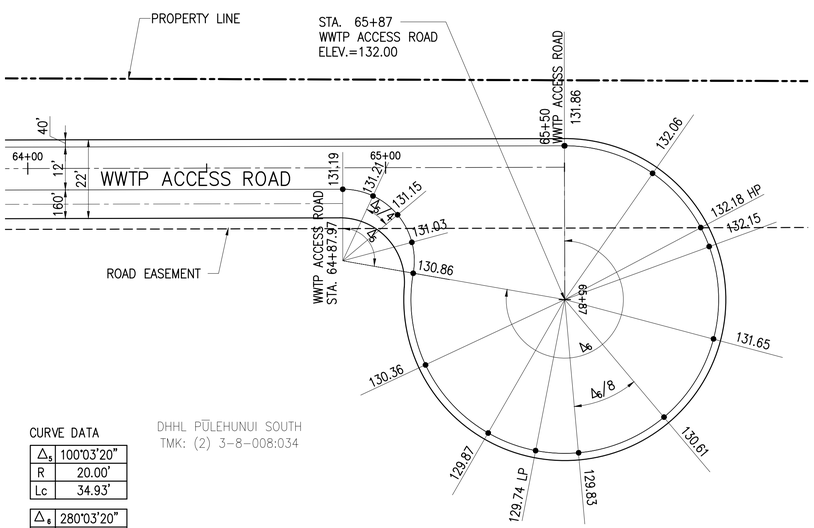

CURVE DATA

Δ_5	100°03'20"
R	20.00'
Lc	34.93'

Δ_6	280°03'20"
R	43.00'
Lc	210.18'

DHHL PŪLEHUNUI SOUTH
TMK: (2) 3-8-008:034

PHASE A3 – CUL-DE-SAC

SCALE: 1"=20'

AustinTsutsumi
& ASSOCIATES, INC.
CIVIL ENGINEERS I SURVEYORS
HONOLULU I WAILUKU I HILO, HAWAII

501 SUMNER STREET, SUITE 521
HONOLULU, HAWAII 96817

PHONE: 808-533-3646
FAX: 808-526-1267

STATE OF HAWAII
DEPARTMENT OF
HAWAIIAN HOME LANDS

PŪLEHUNUI
REGIONAL
INFRASTRUCTURE

AUSTIN, TSUTSUMI & ASSOC., INC.
ENGINEERS, SUVEYORS • HONOLULU, HAWAII

BRYAN H. KOBA
LICENSED PROFESSIONAL ENGINEER
No. 14948
HAWAII U.S.A.

This work was prepared by me or under my supervision and construction of this project will be under my observation. (Observation of construction as defined in Chapter 16-115 Subchapter 1 Definitions of the Hawaii Administrative Rules "Professional Engineers, Architects, Surveyors, and Landscape Architects.")

SIGNATURE — APRIL 30, 2020 EXP. DATE OF THE LICENSE

0 1 2
LINE IS 2 INCHES AT FULL SIZE
(IF NOT 2-inches : Scale Accordingly)

REVISION	DATE	BRIEF	BY

Project No:	16-576
Scale:	AS NOTED
Date:	1/31/2020
Designed By:	BHK
Drawn By:	BHK
Checked By:	

CURVE RETURN AND
CUL DE SAC DETAILS

DWG. NO.
CA3-16

FILE	POCKET	FOLDER	NO.

JOB NO. 0-11-056.004
FN: Z:\2018\18-524 (16-576 PULEHUNUI NORTH SEWER_PHASE 6.3 WASTEWATER TREATMENT FACILITY) BRYAN\DWG\CA3-16 CURVE RETURN AND CUL DE SAC DETAILS.DWG

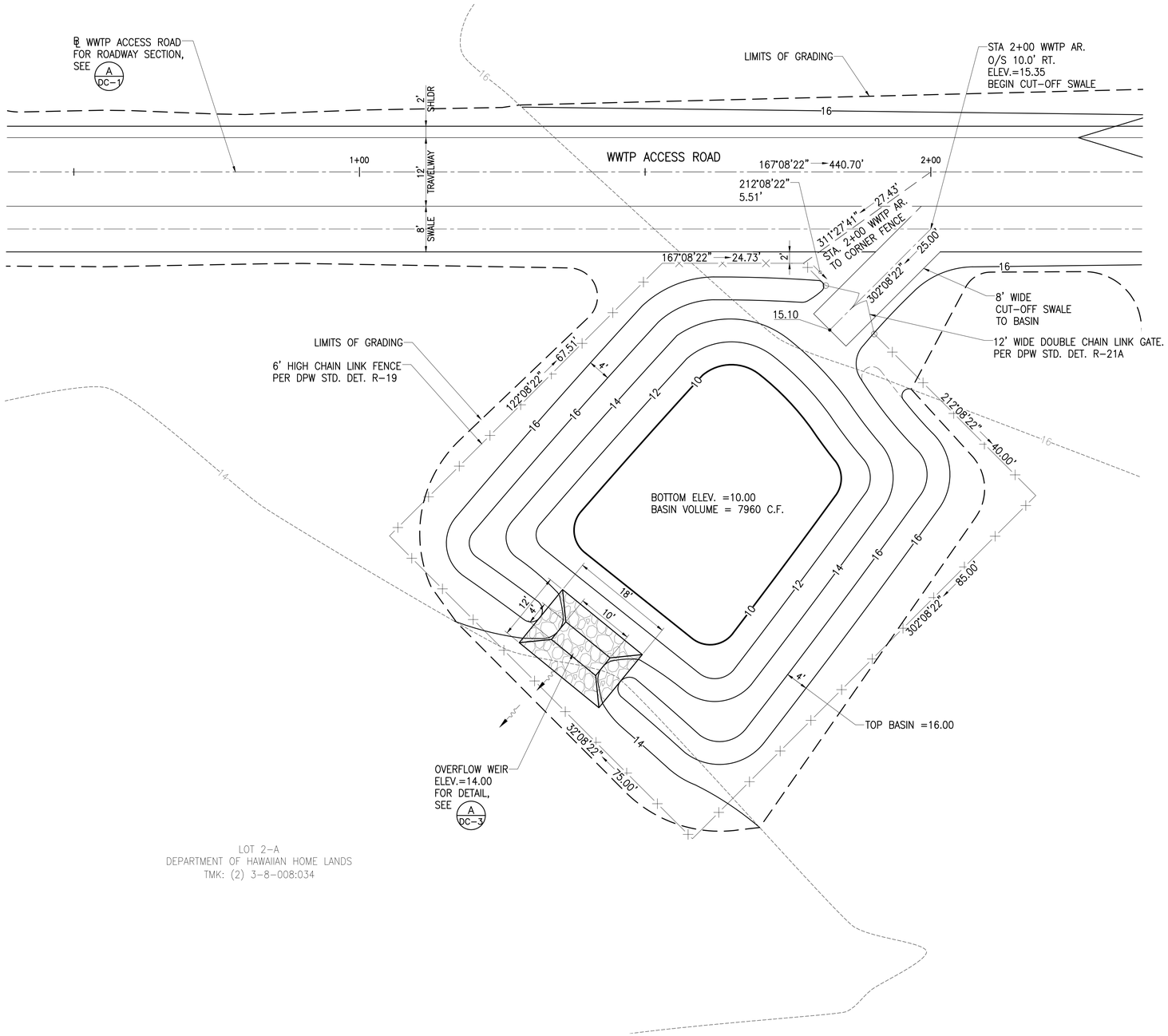

RETENTION BASIN 1

SCALE: 1"=10'

JOB NO. O-11-056.004
FN: Z:\2018\18-524 (16-576 PULEHUNUI NORTH SEWER_PHASE 6.3 WASTEWATER TREATMENT FACILITY) BRYAN\DWG\CA3-17 RETENTION BASIN 1 DETAIL.DWG

AustinTsutsumi
& ASSOCIATES, INC.
CIVIL ENGINEERS I SURVEYORS
HONOLULU I WAILUKU I HILO, HAWAII

501 SUMNER STREET, SUITE 521
HONOLULU, HAWAII 96817

PHONE: 808-533-3646
FAX: 808-526-1267

STATE OF HAWAII
DEPARTMENT OF
HAWAIIAN HOME LANDS

PŪLEHUNUI
REGIONAL
INFRASTRUCTURE

AUSTIN, TSUTSUMI & ASSOC., INC.
ENGINEERS, SURVEYORS • HONOLULU, HAWAII

BRYAN H. KOBA
LICENSED PROFESSIONAL ENGINEER
No. 14948
HAWAII U.S.A.

This work was prepared by me or under my supervision and construction of this project will be under my observation. (Observation of construction as defined in Chapter 16-115 Subchapter 1 Definitions of the Hawaii Administrative Rules "Professional Engineers, Architects, Surveyors, and Landscape Architects.")

SIGNATURE — APRIL 30, 2020 EXP. DATE OF THE LICENSE

0 1 2
LINE IS 2 INCHES AT FULL SIZE
(If NOT 2-inches : Scale Accordingly)

REVISION	DATE	BRIEF	BY

Project No:	16-576
Scale:	AS NOTED
Date:	1/31/2020
Designed By:	BHK
Drawn By:	BHK
Checked By:	

RETENTION BASIN 1 DETAIL

DWG. NO.
CA3-17

SHEET 40 OF 201

FILE	POCKET	FOLDER	NO.

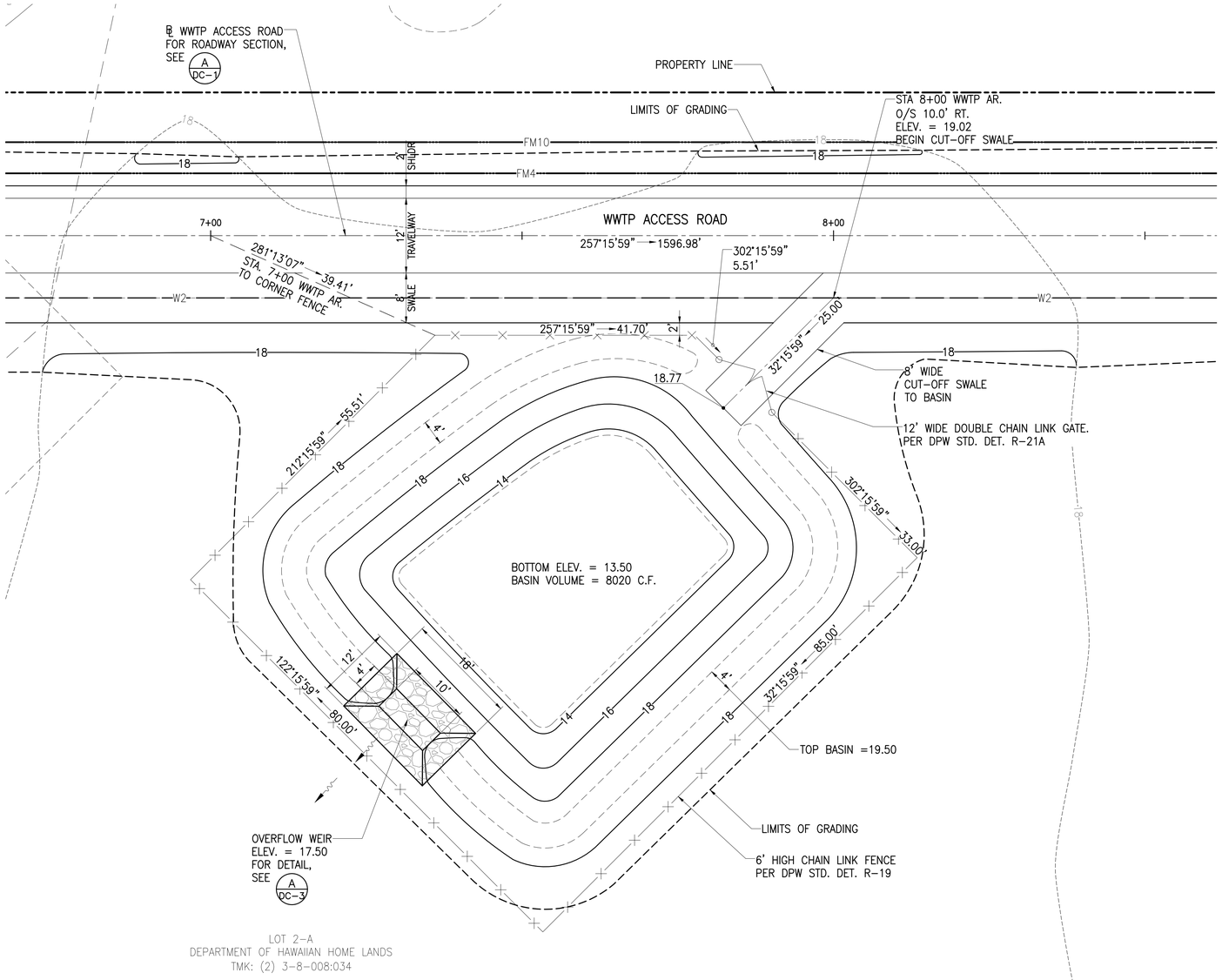

RETENTION BASIN 2

SCALE: 1"=10'

AustinTsutsumi
& ASSOCIATES, INC.
CIVIL ENGINEERS I SURVEYORS
HONOLULU I WAILUKU I HILO, HAWAII

501 SUMNER STREET, SUITE 521
HONOLULU, HAWAII 96817

PHONE: 808-533-3646
FAX: 808-526-1267

STATE OF HAWAII
DEPARTMENT OF
HAWAIIAN HOME LANDS

PŪLEHUNUI
REGIONAL
INFRASTRUCTURE

AUSTIN, TSUTSUMI & ASSOC., INC.
ENGINEERS, SURVEYORS • HONOLULU, HAWAII

BRYAN H. KOBA
LICENSED PROFESSIONAL ENGINEER
No. 14948
HAWAII U.S.A.

This work was prepared by me or under my supervision and construction of this project will be under my observation. (Observation of construction as defined in Chapter 16-115 Subchapter 1 Definitions of the Hawaii Administrative Rules "Professional Engineers, Architects, Surveyors, and Landscape Architects.")

SIGNATURE — APRIL 30, 2020 EXP. DATE OF THE LICENSE

0 1 2
LINE IS 2 INCHES AT FULL SIZE
(If NOT 2-inches : Scale Accordingly)

REVISION	DATE	BRIEF	BY

Project No:	16-576
Scale:	AS NOTED
Date:	1/31/2020
Designed By:	BHK
Drawn By:	BHK
Checked By:	

RETENTION BASIN 2 DETAIL

DWG. NO.

CA3-18

SHEET 41 OF 201

FILE	POCKET	FOLDER	NO.

JOB NO. 0-11-056.004
FN: Z:\2018\18-524 (16-576 PULEHUNUI NORTH SEWER_PHASE 6.3 WASTEWATER TREATMENT FACILITY) BRYAN\DWG\CA3-18 RETENTION BASIN 2 DETAIL.DWG

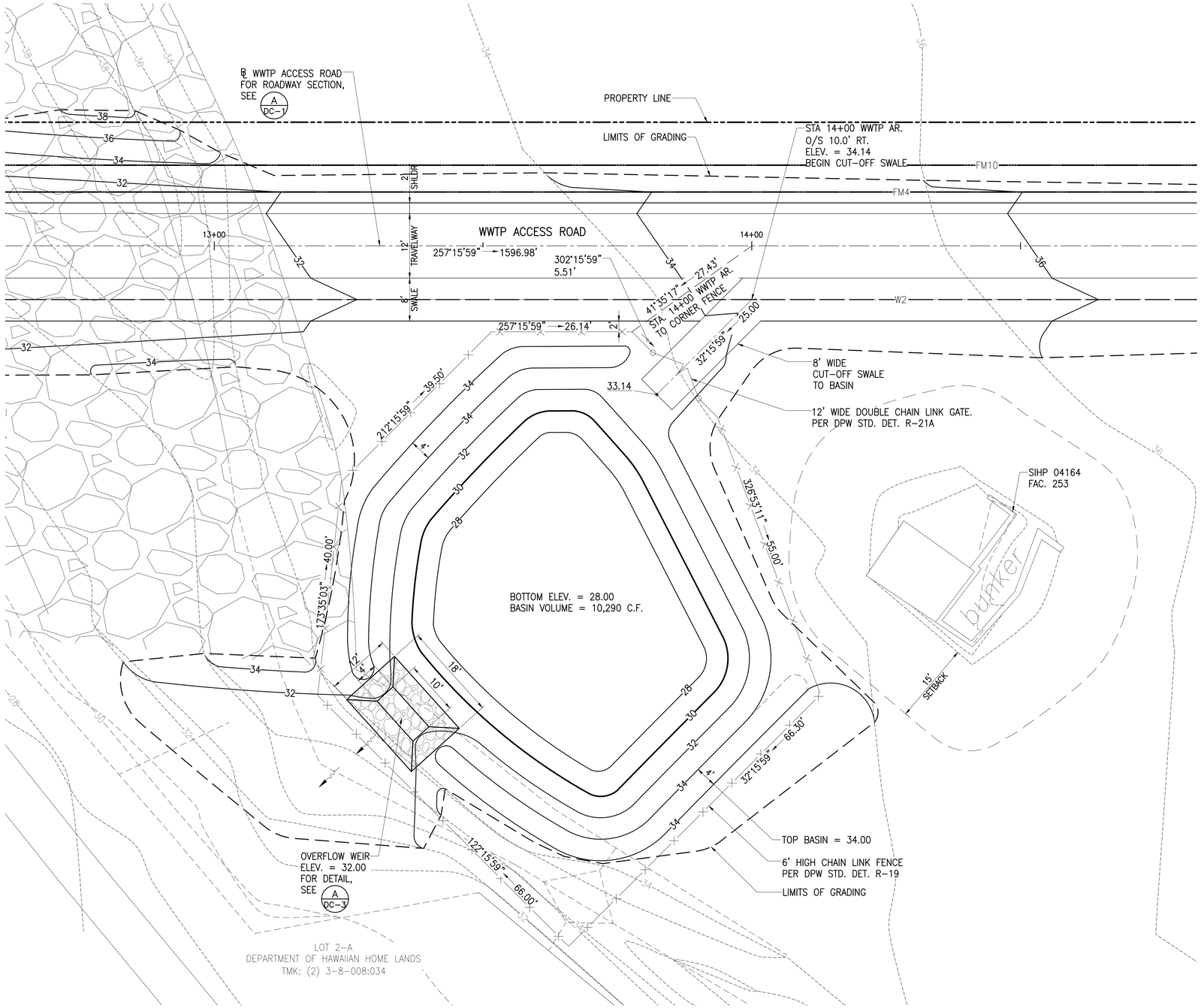

RETENTION BASIN 3

SCALE: 1"=10'

AustinTsutsumi & ASSOCIATES, INC.
CIVIL ENGINEERS I SURVEYORS
HONOLULU I WAILUKU I HILO, HAWAII

501 SUMNER STREET, SUITE 521
HONOLULU, HAWAII 96817

PHONE: 808-533-3646
FAX: 808-526-1267

STATE OF HAWAII
DEPARTMENT OF
HAWAIIAN HOME LANDS

PŪLEHUNUI
REGIONAL
INFRASTRUCTURE

AUSTIN, TSUTSUMI & ASSOC., INC.
ENGINEERS, SURVEYORS • HONOLULU, HAWAII

BRYAN H. KOBA
LICENSED PROFESSIONAL ENGINEER
No. 14948
HAWAII U.S.A.

This work was prepared by me or under my supervision and construction of this project will be under my observation. (Observation of construction as defined in Chapter 16-115 Subchapter 1 Definitions of the Hawaii Administrative Rules "Professional Engineers, Architects, Surveyors, and Landscape Architects.")

SIGNATURE — APRIL 30, 2020 EXP. DATE OF THE LICENSE

0 1 2
LINE IS 2 INCHES AT FULL SIZE
(IF NOT 2-inches , Scale Accordingly)

REVISION	DATE	BRIEF	BY

Project No:	16-576
Scale:	AS NOTED
Date:	1/31/2020
Designed By:	BHK
Drawn By:	BHK
Checked By:	

RETENTION BASIN 3 DETAIL

DWG. NO.

CA3-19

SHEET 42 OF 201

FILE	POCKET	FOLDER	NO.

JOB NO. 0-11-056.004
FN: Z:\2018\18-524 (16-576 PULEHUNUI NORTH SEWER_PHASE 6.3 WASTEWATER TREATMENT FACILITY) BRYAN\DWG\CA3-19 RETENTION BASIN 3 DETAIL.DWG

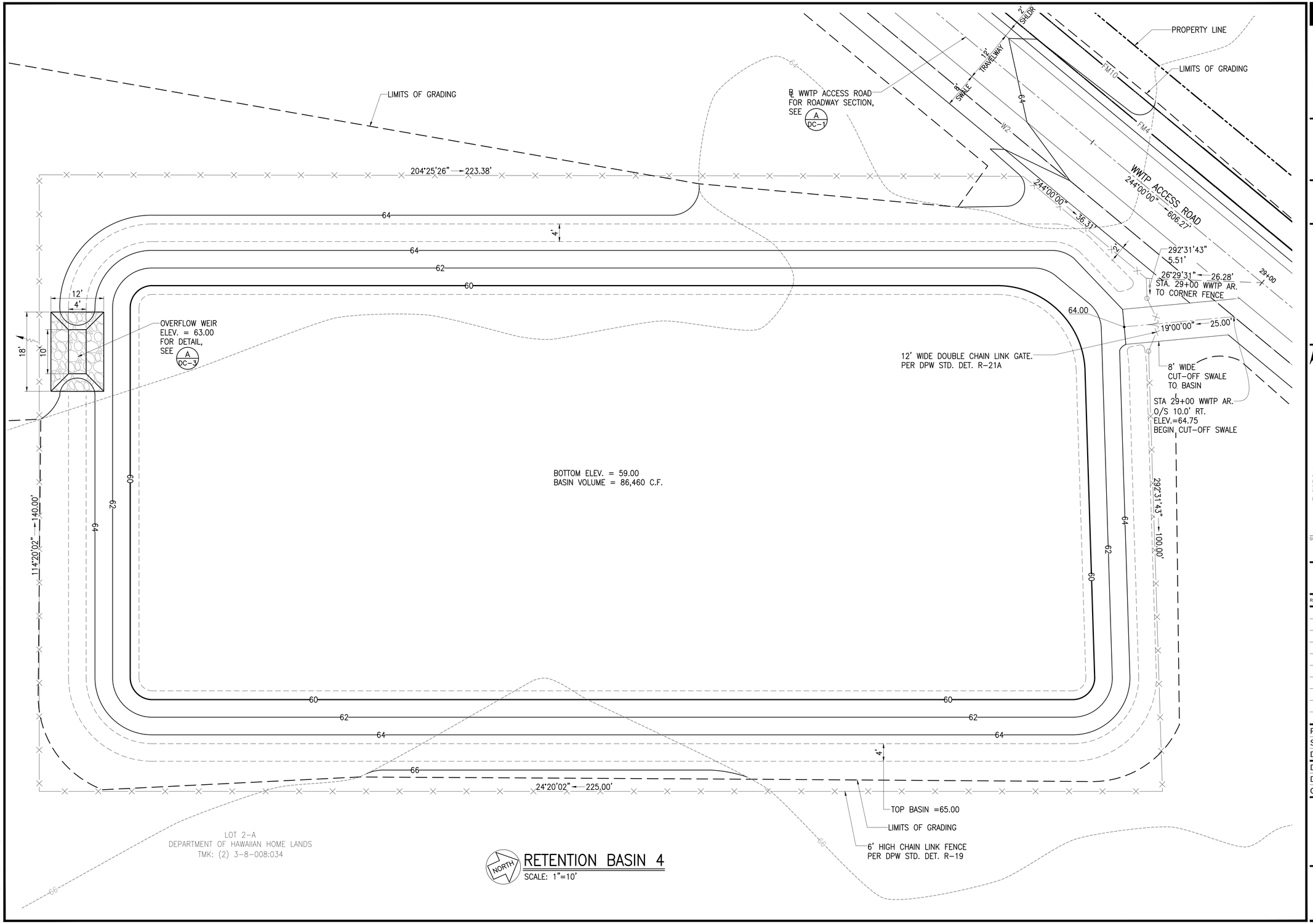

JOB NO. O-11-056.004
FN: Z:\2018\18-524 (16-576 PULEHUNUI NORTH SEWER_PHASE 6.3 WASTEWATER TREATMENT FACILITY) BRYAN\DWG\CA3-20 RETENTION BASIN 4 DETAIL.DWG

AustinTsutsumi & ASSOCIATES, INC.
CIVIL ENGINEERS I SURVEYORS
HONOLULU I WAILUKU I HILO, HAWAII

501 SUMNER STREET, SUITE 521
HONOLULU, HAWAII 96817

PHONE: 808-533-3646
FAX: 808-526-1267

STATE OF HAWAII
DEPARTMENT OF HAWAIIAN HOME LANDS

PŪLEHUNUI REGIONAL INFRASTRUCTURE

AUSTIN, TSUTSUMI & ASSOC., INC.
ENGINEERS, SURVEYORS • HONOLULU, HAWAII

BRYAN H. KOBA
LICENSED PROFESSIONAL ENGINEER
No. 14948
HAWAII U.S.A.

This work was prepared by me or under my supervision and construction of this project will be under my observation. (Observation of construction as defined in Chapter 16-115 Subchapter 1 Definitions of the Hawaii Administrative Rules "Professional Engineers, Architects, Surveyors, and Landscape Architects.")

SIGNATURE — APRIL 30, 2020 EXP. DATE OF THE LICENSE

0 1 2
LINE IS 2 INCHES AT FULL SIZE
(If NOT 2-inches : Scale Accordingly)

REVISION	DATE	BRIEF	BY

Project No:	16-576
Scale:	AS NOTED
Date:	1/31/2020
Designed By:	BHK
Drawn By:	BHK
Checked By:	

RETENTION BASIN 4 DETAIL

DWG. NO.
CA3-20

SHEET 43 OF 201

FILE	POCKET	FOLDER	NO.

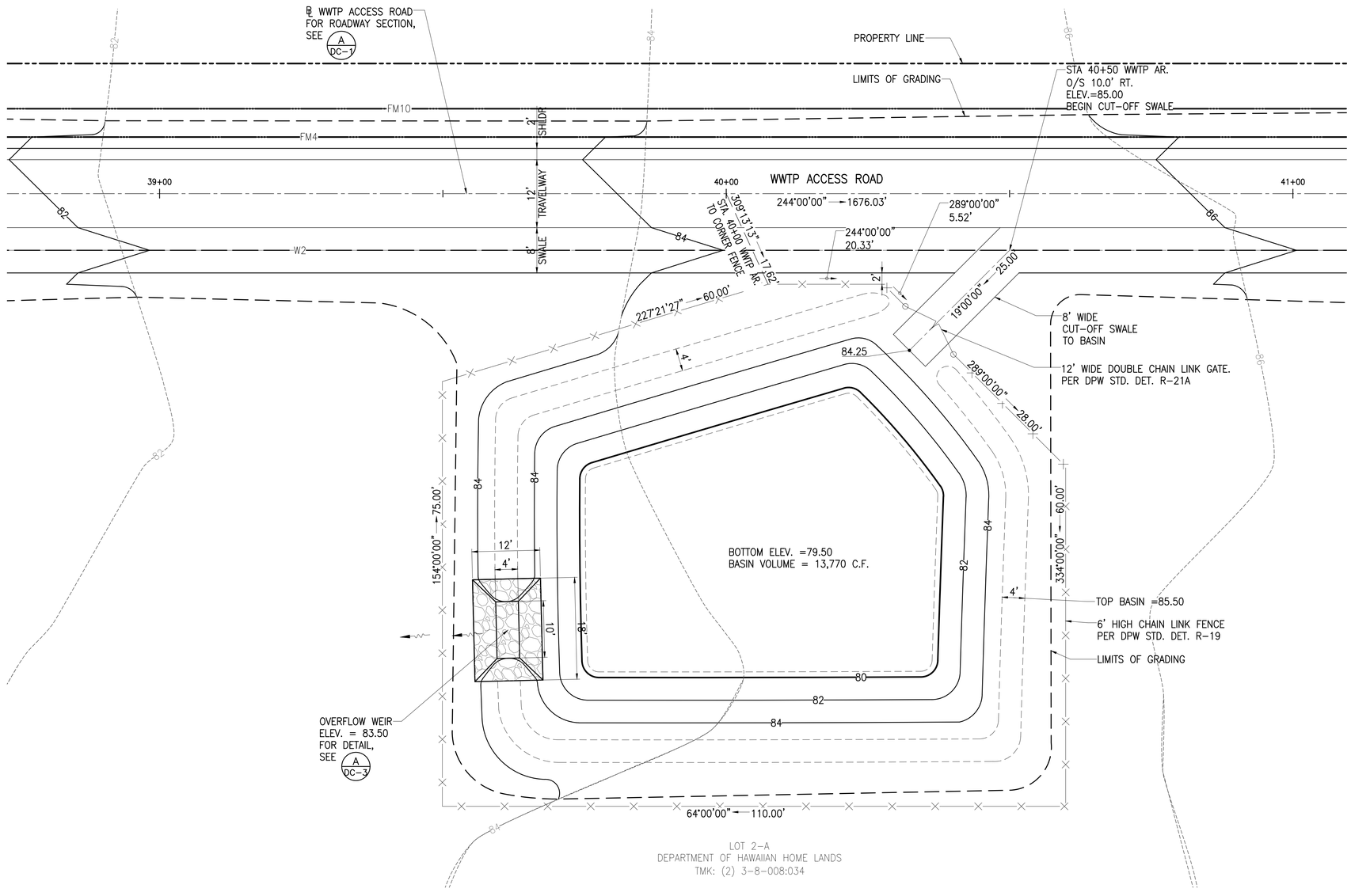

RETENTION BASIN 5

SCALE: 1"=10'

JOB NO. O-11-056.004
FN: Z:\2018\18-524 (16-576 PULEHUNUI NORTH SEWER_PHASE 6.3 WASTEWATER TREATMENT FACILITY) BRYAN\DWG\CA3-21 RETENTION BASIN 5 DETAIL.DWG

AustinTsutsumi
& ASSOCIATES, INC.
CIVIL ENGINEERS I SURVEYORS
HONOLULU I WAILUKU I HILO, HAWAII

501 SUMNER STREET, SUITE 521
HONOLULU, HAWAII 96817

PHONE: 808-533-3646
FAX: 808-526-1267

STATE OF HAWAII
DEPARTMENT OF
HAWAIIAN HOME LANDS

PŪLEHUNUI
REGIONAL
INFRASTRUCTURE

AUSTIN, TSUTSUMI & ASSOC., INC.
ENGINEERS, SURVEYORS • HONOLULU, HAWAII

BRYAN H. KOBA
LICENSED PROFESSIONAL ENGINEER
No. 14948
HAWAII U.S.A.

This work was prepared by me or under my supervision and construction of this project will be under my observation. (Observation of construction as defined in Chapter 16-115 Subchapter 1 Definitions of the Hawaii Administrative Rules "Professional Engineers, Architects, Surveyors, and Landscape Architects.")

SIGNATURE — APRIL 30, 2020 EXP. DATE OF THE LICENSE

0 1 2
LINE IS 2 INCHES AT FULL SIZE
(If NOT 2-inches : Scale Accordingly)

REVISION	DATE	BRIEF	BY

Project No:	16-576
Scale:	AS NOTED
Date:	1/31/2020
Designed By:	BHK
Drawn By:	BHK
Checked By:	

RETENTION BASIN 5 DETAIL

DWG. NO.

CA3-21

SHEET 44 OF 201

FILE	POCKET	FOLDER	NO.

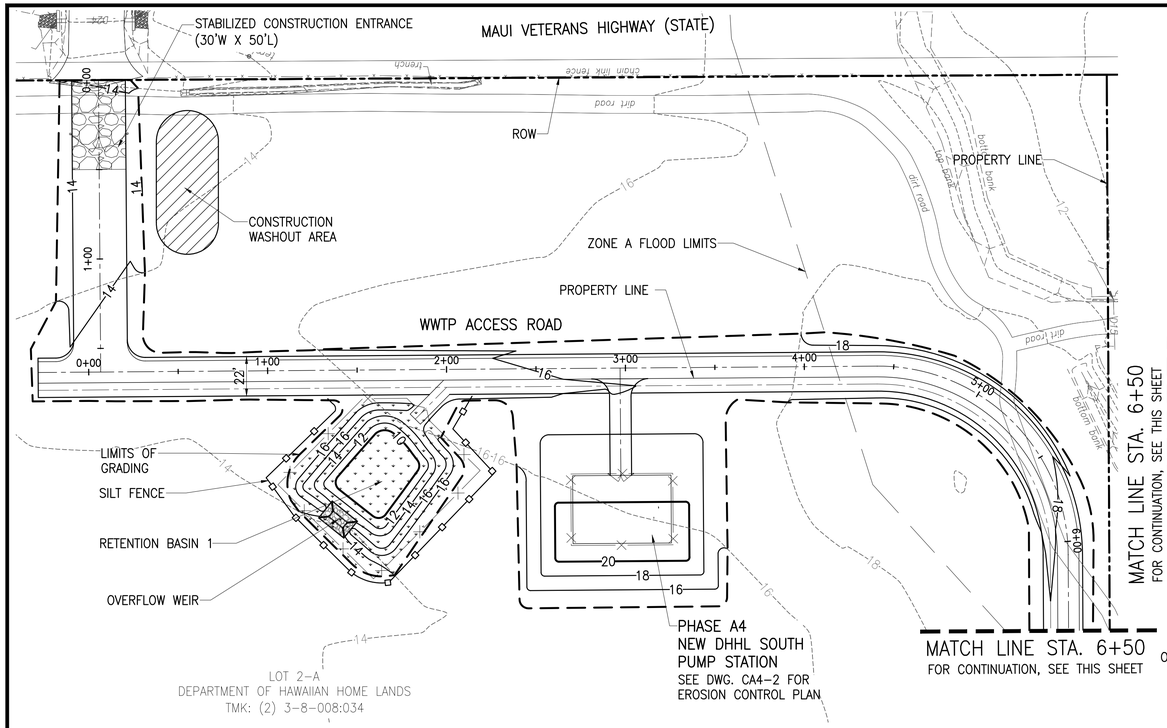

NORTH

PHASE A3 – EROSION CONTROL PLAN STA. 0+00 TO 6+50

SCALE: 1"=40'

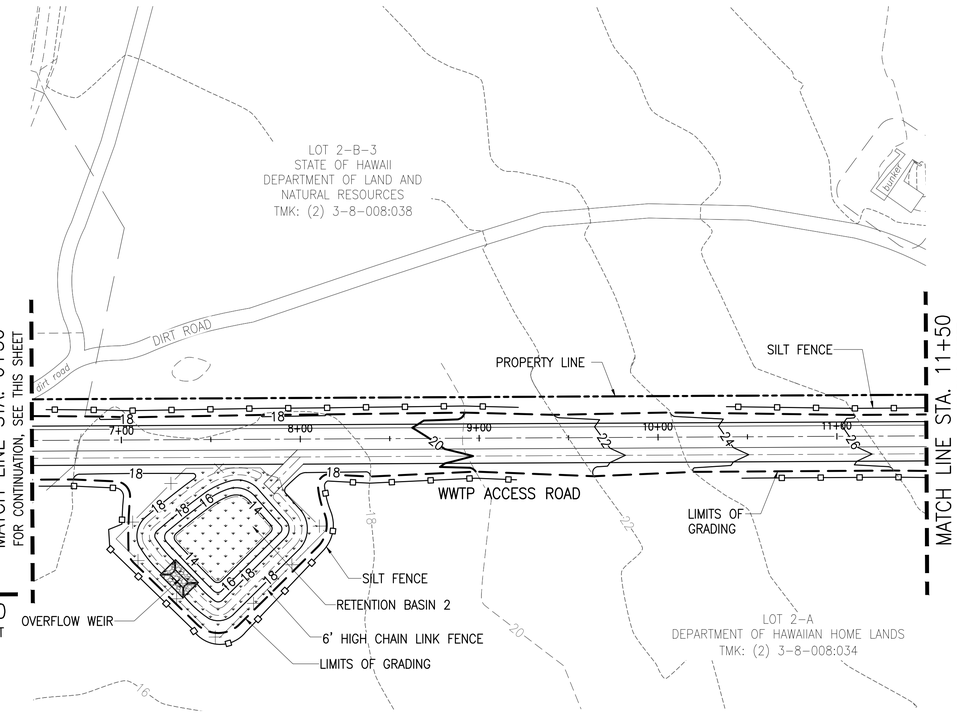

NORTH

PHASE A3 – EROSION CONTROL PLAN STA. 6+50 TO 11+50

SCALE: 1"=40'

ESTIMATED PHASE A3 EARTHWORK SUMMARY:

AREA OF CLEARING, GRUBBING AND GRADING: 7.58 ACRES

EXCAVATION VOLUME: 9230 CU. YD.
EMBANKMENT VOLUME: 2160 CU. YD.
NET VOLUME: 7070 CU. YD. (CUT)

NOTE:
THE ABOVE QUANTITIES ARE RAW QUANTITIES AND DO NOT ACCOUNT FOR SHRINKAGE OR CONSOLIDATION.

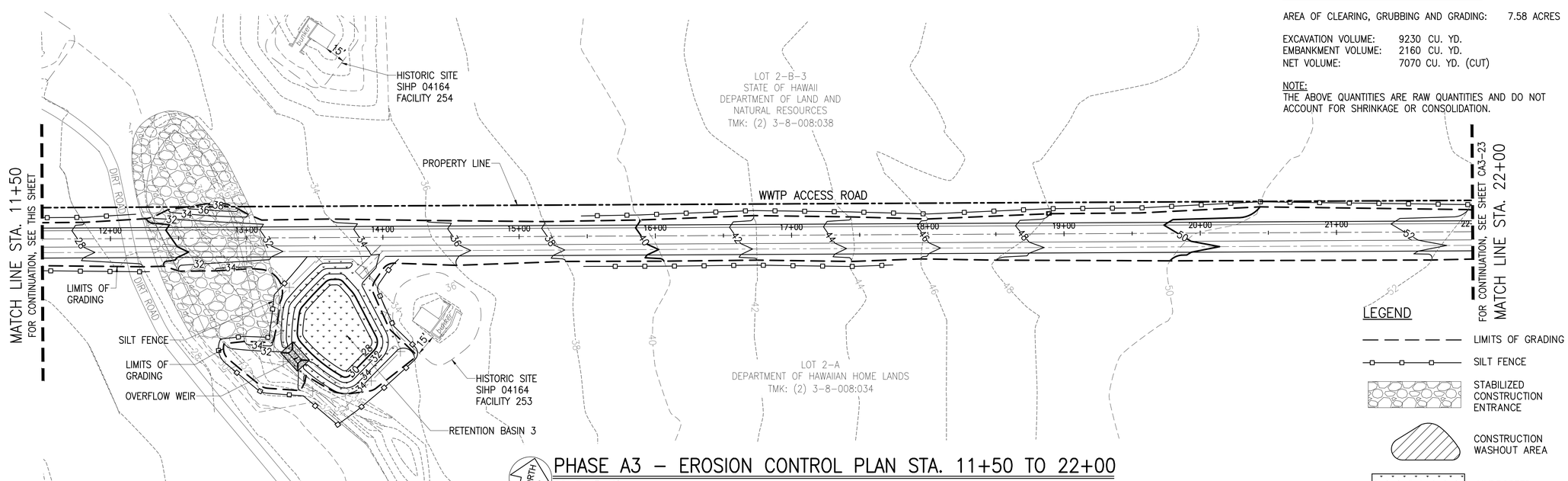

NORTH

PHASE A3 – EROSION CONTROL PLAN STA. 11+50 TO 22+00

SCALE: 1"=40'

LEGEND

- LIMITS OF GRADING
- SILT FENCE
- STABILIZED CONSTRUCTION ENTRANCE
- CONSTRUCTION WASHOUT AREA
- HYDROSEED

AustinTsutsumi
& ASSOCIATES, INC.
CIVIL ENGINEERS I SURVEYORS
HONOLULU I WAILUKU I HILO, HAWAII

501 SUMNER STREET, SUITE 521
HONOLULU, HAWAII 96817

PHONE: 808-533-3646
FAX: 808-526-1267

STATE OF HAWAII
DEPARTMENT OF
HAWAIIAN HOME LANDS

PŪLEHUNUI
REGIONAL
INFRASTRUCTURE

AUSTIN, TSUTSUMI & ASSOC., INC.
ENGINEERS, SURVEYORS • HONOLULU, HAWAII

BRYAN H. KOBA
LICENSED PROFESSIONAL ENGINEER
No. 14948
HAWAII U.S.A.

This work was prepared by me or under my supervision and construction of this project will be under my observation. (Observation of construction as defined in Chapter 16-115 Subchapter 1 Definitions of the Hawaii Administrative Rules "Professional Engineers, Architects, Surveyors, and Landscape Architects.")

SIGNATURE APRIL 30, 2020
EXP. DATE OF THE LICENSE

0 1 2
LINE IS 2 INCHES AT FULL SIZE
(If NOT 2-inches : Scale Accordingly)

REVISION	DATE	BRIEF	BY

Project No:	16-576
Scale:	AS NOTED
Date:	1/31/2020
Designed By:	BHK
Drawn By:	BHK
Checked By:	

PHASE A3 – EROSION CONTROL PLAN STA. 0+00 TO 22+00

DWG. NO.

CA3-22

SHEET 45 OF 201

FILE	POCKET	FOLDER	NO.

JOB NO. 0-11-056.004
FN: Z:\2018\18-524 (16-576 PULEHUNUI NORTH SEWER_PHASE 6.3 WASTEWATER TREATMENT FACILITY) BRYAN\DWG\CA3-22 PHASE A3 ECP STA 0+00 TO 22+00.DWG

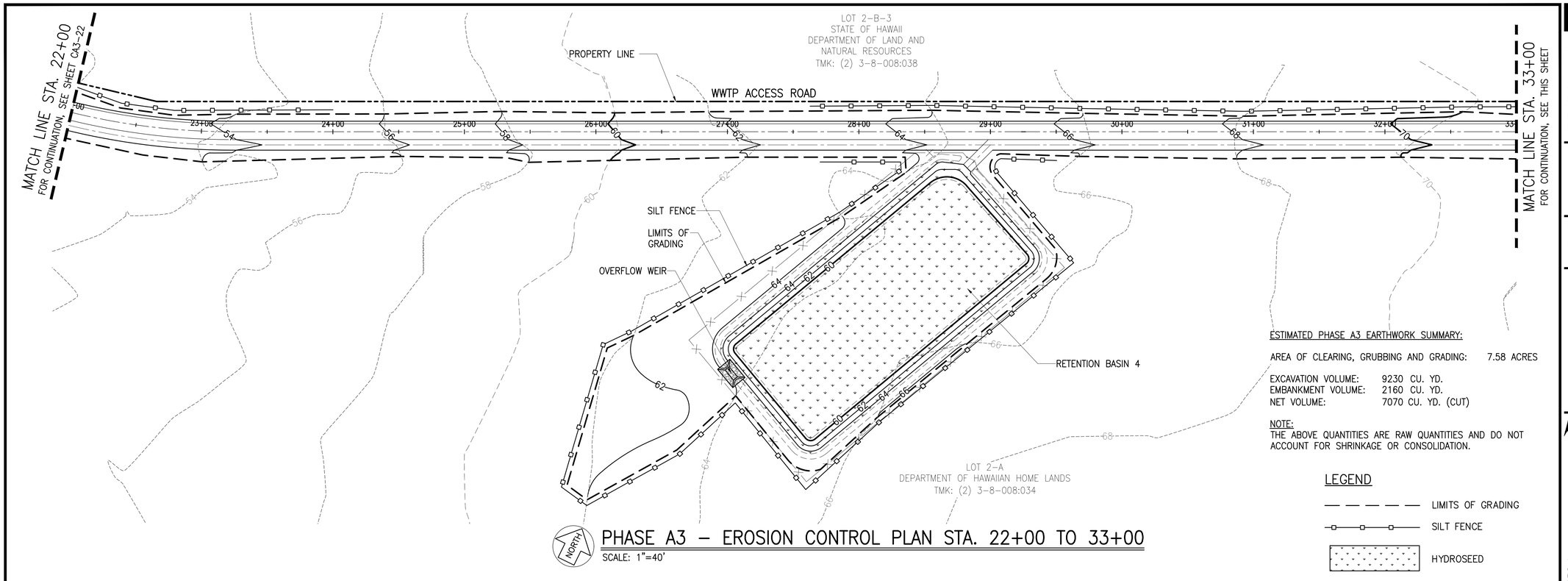

PHASE A3 – EROSION CONTROL PLAN STA. 22+00 TO 33+00

SCALE: 1"=40'

ESTIMATED PHASE A3 EARTHWORK SUMMARY:

AREA OF CLEARING, GRUBBING AND GRADING: 7.58 ACRES

EXCAVATION VOLUME: 9230 CU. YD.
EMBANKMENT VOLUME: 2160 CU. YD.
NET VOLUME: 7070 CU. YD. (CUT)

NOTE:
THE ABOVE QUANTITIES ARE RAW QUANTITIES AND DO NOT ACCOUNT FOR SHRINKAGE OR CONSOLIDATION.

LEGEND

- LIMITS OF GRADING
- SILT FENCE
- HYDROSEED

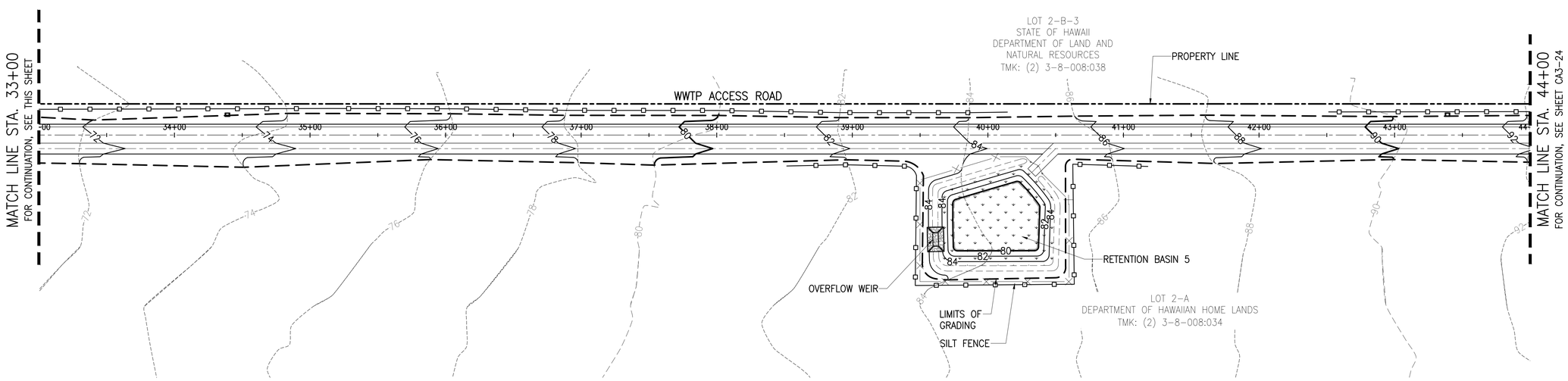

PHASE A3 – EROSION CONTROL PLAN STA. 33+00 TO 44+00

SCALE: 1"=40'

AustinTsutsumi
& ASSOCIATES, INC.
CIVIL ENGINEERS I SURVEYORS
HONOLULU I WAILUKU I HILO, HAWAII

501 SUMNER STREET, SUITE 521
HONOLULU, HAWAII 96817

PHONE: 808-533-3646
FAX: 808-526-1267

STATE OF HAWAII
DEPARTMENT OF
HAWAIIAN HOME LANDS

PŪLEHUNUI
REGIONAL
INFRASTRUCTURE

AUSTIN, TSUTSUMI & ASSOC., INC.
ENGINEERS, SURVEYORS • HONOLULU, HAWAII

BRYAN H. KOBA
LICENSED PROFESSIONAL ENGINEER
No. 14948
HAWAII U.S.A.

This work was prepared by me or under my supervision and construction of this project will be under my observation. (Observation of construction as defined in Chapter 16-115 Subchapter 1 Definitions of the Hawaii Administrative Rules "Professional Engineers, Architects, Surveyors, and Landscape Architects.")

SIGNATURE — APRIL 30, 2020 EXP. DATE OF THE LICENSE

0 1 2
LINE IS 2 INCHES AT FULL SIZE
(If NOT 2-inches : Scale Accordingly)

REVISION	DATE	BRIEF	BY

Project No:	16-576
Scale:	AS NOTED
Date:	1/31/2020
Designed By:	BHK
Drawn By:	BHK
Checked By:	

PHASE A3 – EROSION CONTROL PLAN STA. 22+00 TO 44+00

DWG. NO.

CA3-23

SHEET 46 OF 201

FILE	POCKET	FOLDER	NO.

JOB NO. 0-11-056.004
FN: Z:\2018\18-524 (16-576 PULEHUNUI NORTH SEWER_PHASE 6.3 WASTEWATER TREATMENT FACILITY) BRYAN\DWG\CA3-23 PHASE A3 ECP STA 22+00 TO 44+00.DWG

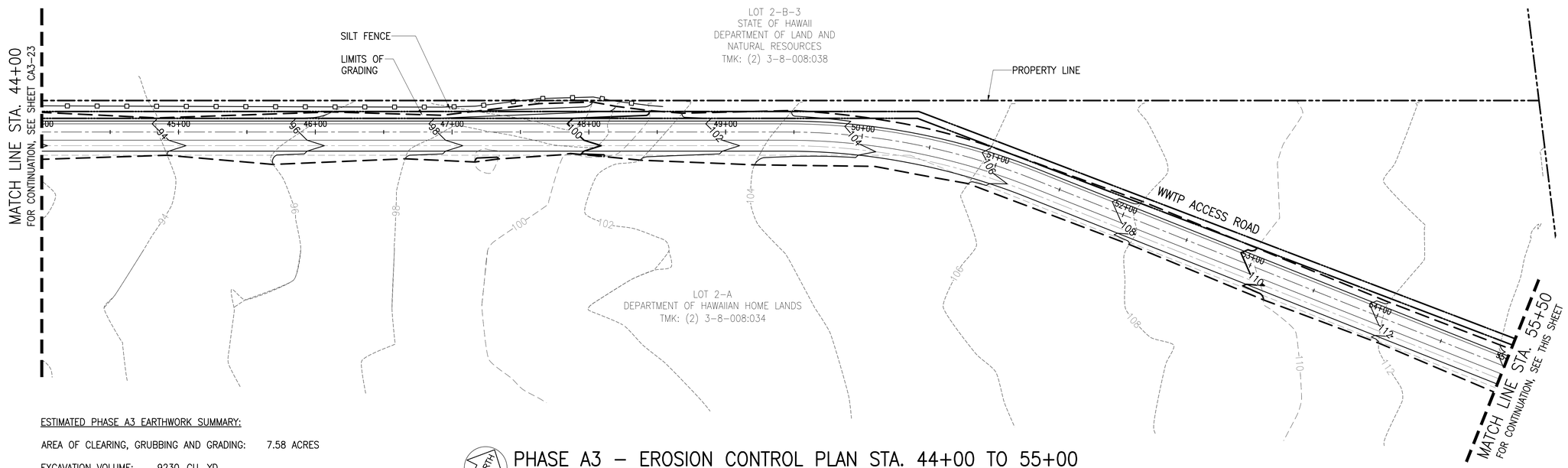

ESTIMATED PHASE A3 EARTHWORK SUMMARY:

AREA OF CLEARING, GRUBBING AND GRADING: 7.58 ACRES

EXCAVATION VOLUME: 9230 CU. YD.
EMBANKMENT VOLUME: 2160 CU. YD.
NET VOLUME: 7070 CU. YD. (CUT)

NOTE:
THE ABOVE QUANTITIES ARE RAW QUANTITIES AND DO NOT ACCOUNT FOR SHRINKAGE OR CONSOLIDATION.

NORTH

PHASE A3 – EROSION CONTROL PLAN STA. 44+00 TO 55+00

SCALE: 1"=40'

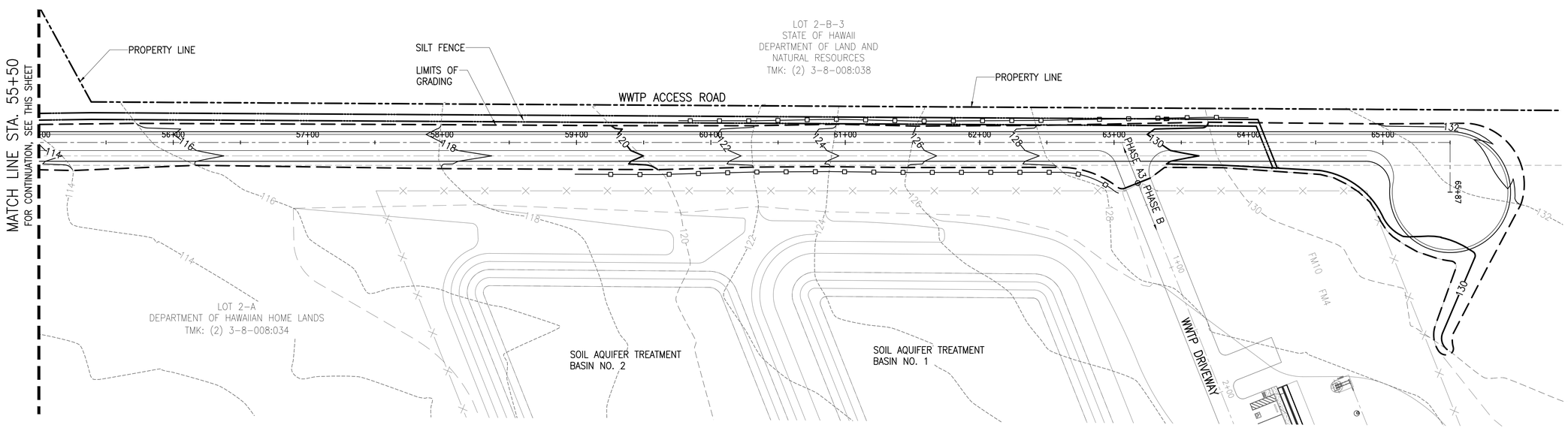

NORTH

PHASE A3 – EROSION CONTROL PLAN STA. 55+00 TO END

SCALE: 1"=40'

LEGEND

— — — — — LIMITS OF GRADING

—o—o—o— SILT FENCE

AustinTsutsumi
& ASSOCIATES, INC.
CIVIL ENGINEERS I SURVEYORS
HONOLULU I WAILUKU I HILO, HAWAII

501 SUMNER STREET, SUITE 521
HONOLULU, HAWAII 96817

PHONE: 808-533-3646
FAX: 808-526-1267

STATE OF HAWAII
DEPARTMENT OF
HAWAIIAN HOME LANDS

PŪLEHUNUI
REGIONAL
INFRASTRUCTURE

AUSTIN, TSUTSUMI & ASSOC., INC.
ENGINEERS, SURVEYORS • HONOLULU, HAWAII

BRYAN H. KOBA
LICENSED PROFESSIONAL ENGINEER
No. 14948
HAWAII U.S.A.

This work was prepared by me or under my supervision and construction of this project will be under my observation. (Observation of construction as defined in Chapter 16-115 Subchapter 1 Definitions of the Hawaii Administrative Rules "Professional Engineers, Architects, Surveyors, and Landscape Architects.")

SIGNATURE APRIL 30, 2020 EXP. DATE OF THE LICENSE

0 1 2
LINE IS 2 INCHES AT FULL SIZE
(if NOT 2-inches : Scale Accordingly)

REVISION	DATE	BRIEF	BY

Project No:	16-576
Scale:	AS NOTED
Date:	1/31/2020
Designed By:	BHK
Drawn By:	BHK
Checked By:	

PHASE A3 – EROSION CONTROL PLAN STA. 44+00 TO END

DWG. NO.
CA3-24

FILE	POCKET	FOLDER	NO.

JOB NO. 0-11-056.004
FN: Z:\2018\18-524 (16-576 PULEHUNUI NORTH SEWER_PHASE 6.3 WASTEWATER TREATMENT FACILITY) BRYAN\DWG\CA3-24 PHASE A3 ECP STA 44+00 RO END.DWG

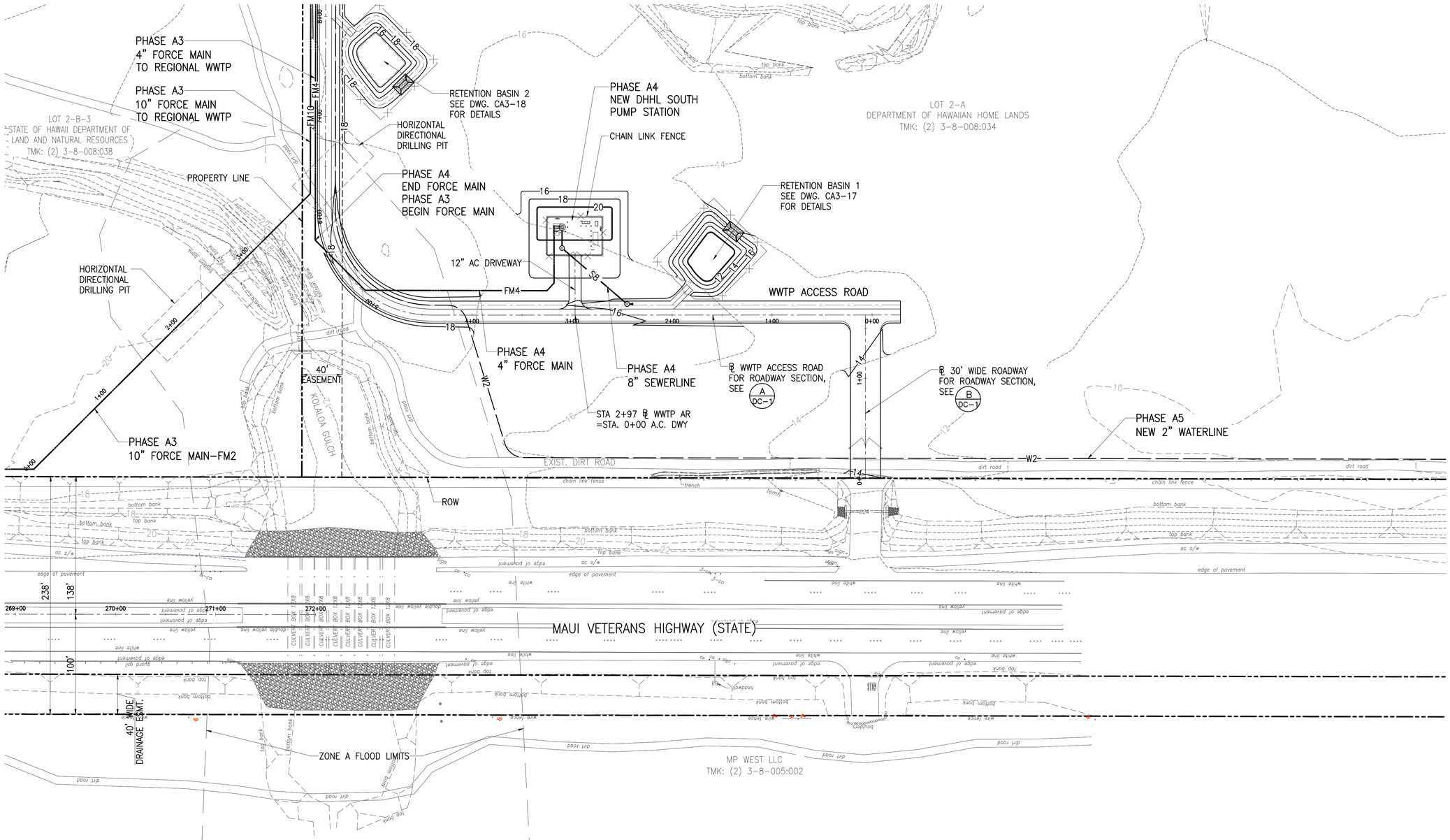

NORTH

PHASE A4 DHHL SOUTH PUMP STATION OVERALL SITE PLAN

SCALE: 1"=50'

JOB NO. 0-11-056.004
FN: Z:\2018\18-524 (16-576 PULEHUNUI NORTH SEWER_PHASE 6.3 WASTEWATER TREATMENT FACILITY) BRYAN\DWG\CA4-1 PHASE A4 DHHL SOUTH PUMP STATION OVERALL SITE PLAN.DWG

AustinTsutsumi
& ASSOCIATES, INC.
CIVIL ENGINEERS I SURVEYORS
HONOLULU I WAILUKU I HILO, HAWAII

501 SUMNER STREET, SUITE 521
HONOLULU, HAWAII 96817

PHONE: 808-533-3646
FAX: 808-526-1267

STATE OF HAWAII
DEPARTMENT OF
HAWAIIAN HOME LANDS

PŪLEHUNUI
REGIONAL
INFRASTRUCTURE

AUSTIN, TSUTSUMI & ASSOC., INC.
ENGINEERS, SURVEYORS • HONOLULU, HAWAII

BRYAN H. KOBA
LICENSED PROFESSIONAL ENGINEER
No. 14948
HAWAII U.S.A.

This work was prepared by me or under my supervision and construction of this project will be under my observation. (Observation of construction as defined in Chapter 16-115 Subchapter 1 Definitions of the Hawaii Administrative Rules "Professional Engineers, Architects, Surveyors, and Landscape Architects.")

SIGNATURE — APRIL 30, 2020 EXP. DATE OF THE LICENSE

0 1 2
LINE IS 2 INCHES AT FULL SIZE
(If NOT 2-inches : Scale Accordingly)

REVISION	DATE	BRIEF	BY

Project No:	16-576
Scale:	AS NOTED
Date:	1/31/2020
Designed By:	BHK
Drawn By:	BHK
Checked By:	

PHASE A4 DHHL SOUTH PUMP STATION OVERALL SITE PLAN

DWG. NO.

CA4-1

SHEET 48 OF 201

FILE	POCKET	FOLDER	NO.

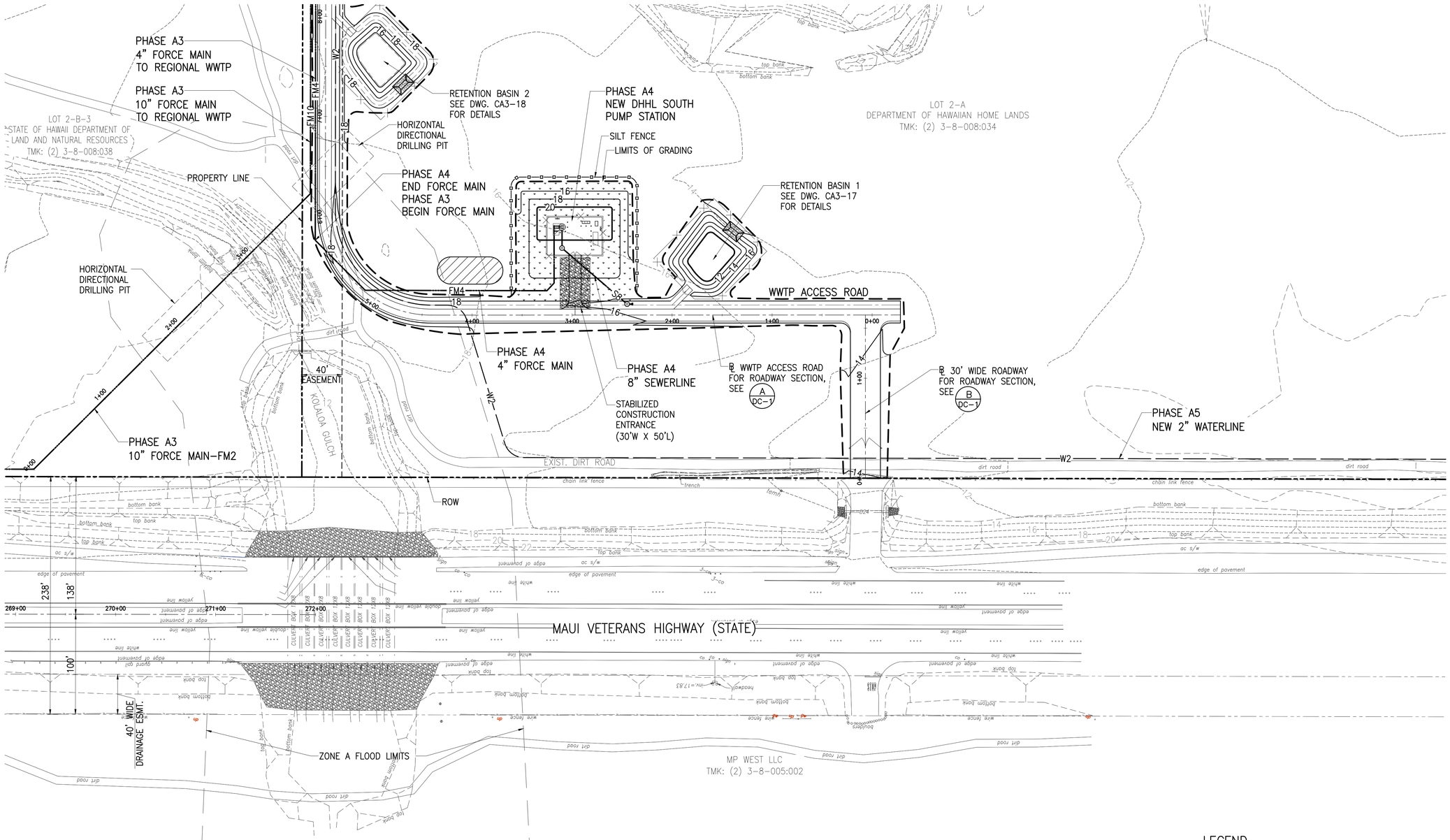

PHASE A4 – EROSION CONTROL PLAN

SCALE: 1"=50'

NORTH

LEGEND

- LIMITS OF GRADING
- SILT FENCE
- STABILIZED CONSTRUCTION ENTRANCE
- CONSTRUCTION WASHOUT AREA
- HYDROSEED

AustinTsutsumi
& ASSOCIATES, INC.
CIVIL ENGINEERS I SURVEYORS
HONOLULU I WAILUKU I HILO, HAWAII

501 SUMNER STREET, SUITE 521
HONOLULU, HAWAII 96817

PHONE: 808-533-3646
FAX: 808-526-1267

STATE OF HAWAII
DEPARTMENT OF
HAWAIIAN HOME LANDS

PŪLEHUNUI
REGIONAL
INFRASTRUCTURE

AUSTIN, TSUTSUMI & ASSOC., INC.
ENGINEERS, SURVEYORS • HONOLULU, HAWAII

BRYAN H. KOBA
LICENSED PROFESSIONAL ENGINEER
No. 14948
HAWAII U.S.A.

This work was prepared by me or under my supervision and construction of this project will be under my observation. (Observation of construction as defined in Chapter 16-115 Subchapter 1 Definitions of the Hawaii Administrative Rules "Professional Engineers, Architects, Surveyors, and Landscape Architects.")

SIGNATURE — APRIL 30, 2020 — EXP. DATE OF THE LICENSE

0 1 2
LINE IS 2 INCHES AT FULL SIZE
(If NOT 2-inches : Scale Accordingly)

REVISION	DATE	BRIEF	BY

Project No:	16-576
Scale:	AS NOTED
Date:	1/31/2020
Designed By:	BHK
Drawn By:	BHK
Checked By:	

PHASE A4 – EROSION CONTROL PLAN

DWG. NO.

CA4-2

SHEET 49 OF 201

FILE	POCKET	FOLDER	NO.

JOB NO. 0-11-056.004
FN: Z:\2018\18-524 (16-576 PULEHUNUI NORTH SEWER_PHASE 6.3 WASTEWATER TREATMENT FACILITY) BRYAN\DWG\CA4-2 PHASE A4 EROSION CONTROL PLAN.DWG

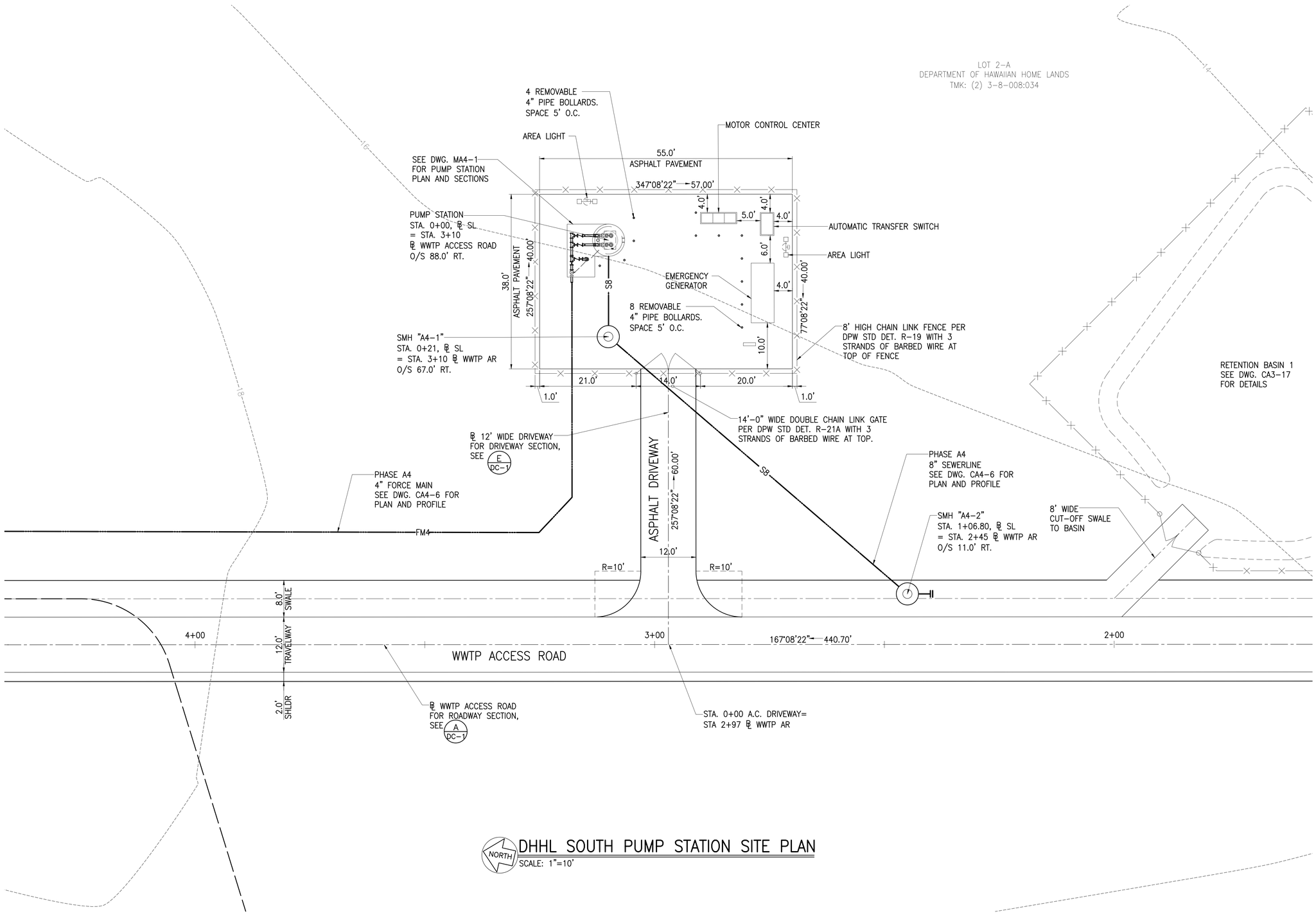

DHHL SOUTH PUMP STATION SITE PLAN

SCALE: 1"=10'

JOB NO. 0-11-056.004
FN: Z:\2018\18-524 (16-576 PULEHUNUI NORTH SEWER_PHASE 6.3 WASTEWATER TREATMENT FACILITY) BRYAN\DWG\CA4-3 DHHL SOUTH PUMP STATION SITE PLAN.DWG

AustinTsutsumi
& ASSOCIATES, INC.
CIVIL ENGINEERS I SURVEYORS
HONOLULU I WAILUKU I HILO, HAWAII

501 SUMNER STREET, SUITE 521
HONOLULU, HAWAII 96817

PHONE: 808-533-3646
FAX: 808-526-1267

STATE OF HAWAII
DEPARTMENT OF
HAWAIIAN HOME LANDS

PŪLEHUNUI
REGIONAL
INFRASTRUCTURE

AUSTIN, TSUTSUMI & ASSOC., INC.
ENGINEERS, SURVEYORS • HONOLULU, HAWAII

BRYAN H. KOBA
LICENSED PROFESSIONAL ENGINEER
No. 14948
HAWAII U.S.A.

This work was prepared by me or under my supervision and construction of this project will be under my observation. (Observation of construction as defined in Chapter 16-115 Subchapter 1 Definitions of the Hawaii Administrative Rules "Professional Engineers, Architects, Surveyors, and Landscape Architects.")

SIGNATURE APRIL 30, 2020
EXP. DATE OF THE LICENSE

0 1 2
LINE IS 2 INCHES AT FULL SIZE
(IF NOT 2-inches - Scale Accordingly)

REVISION	DATE	BRIEF	BY

Project No:	16-576
Scale:	AS NOTED
Date:	1/31/2020
Designed By:	BHK
Drawn By:	BHK
Checked By:	

DHHL SOUTH PUMP
STATION SITE PLAN

DWG. NO.
CA4-3

SHEET 50 OF 201

FILE	POCKET	FOLDER	NO.

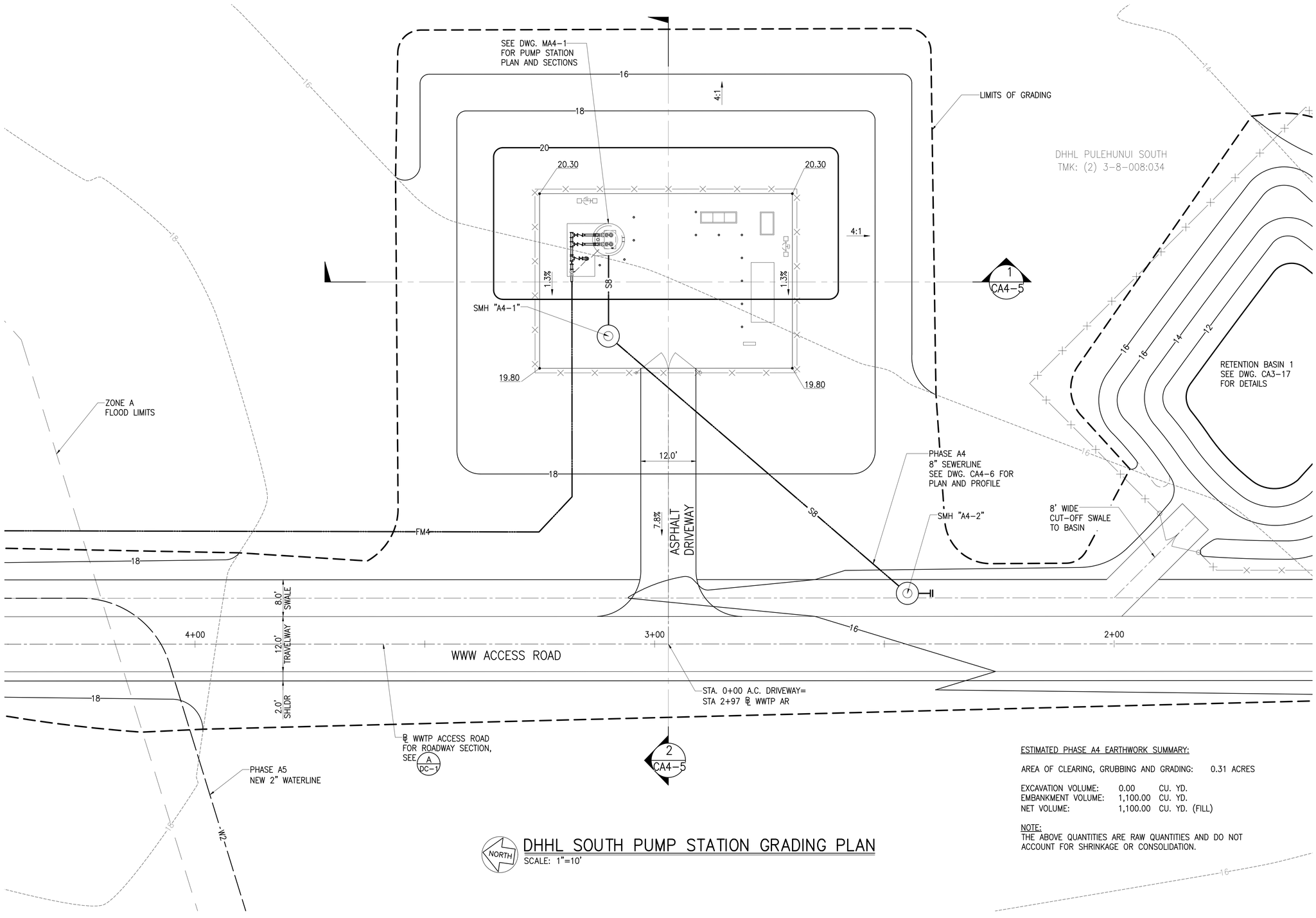

DHHL SOUTH PUMP STATION GRADING PLAN

SCALE: 1"=10'

ESTIMATED PHASE A4 EARTHWORK SUMMARY:

AREA OF CLEARING, GRUBBING AND GRADING: 0.31 ACRES

EXCAVATION VOLUME:	0.00	CU. YD.
EMBANKMENT VOLUME:	1,100.00	CU. YD.
NET VOLUME:	1,100.00	CU. YD. (FILL)

NOTE:
THE ABOVE QUANTITIES ARE RAW QUANTITIES AND DO NOT ACCOUNT FOR SHRINKAGE OR CONSOLIDATION.

JOB NO. 0-11-056.004
FN: Z:\2018\18-524 (16-576 PULEHUNUI NORTH SEWER_PHASE 6.3 WASTEWATER TREATMENT FACILITY) BRYAN\DWG\CA4-4 DHHL SOUTH PUMP STATION GRADING PLAN.DWG

AustinTsutsumi
& ASSOCIATES, INC.
CIVIL ENGINEERS I SURVEYORS
HONOLULU I WAILUKU I HILO, HAWAII

501 SUMNER STREET, SUITE 521
HONOLULU, HAWAII 96817

PHONE: 808-533-3646
FAX: 808-526-1267

STATE OF HAWAII
DEPARTMENT OF
HAWAIIAN HOME LANDS

PŪLEHUNUI
REGIONAL
INFRASTRUCTURE

AUSTIN, TSUTSUMI & ASSOC., INC.
ENGINEERS, SURVEYORS • HONOLULU, HAWAII

BRYAN H. KOBA
LICENSED PROFESSIONAL ENGINEER
No. 14948
HAWAII U.S.A.

This work was prepared by me or under my supervision and construction of this project will be under my observation. (Observation of construction as defined in Chapter 16-115 Subchapter 1 Definitions of the Hawaii Administrative Rules "Professional Engineers, Architects, Surveyors, and Landscape Architects.")

SIGNATURE APRIL 30, 2020
EXP. DATE OF THE LICENSE

0 1 2
LINE IS 2 INCHES AT FULL SIZE
(If NOT 2-inches : Scale Accordingly)

REVISION	DATE	BRIEF	BY

Project No:	16-576
Scale:	AS NOTED
Date:	1/31/2020
Designed By:	BHK
Drawn By:	BHK
Checked By:	

DHHL SOUTH PUMP STATION
GRADING PLAN

DWG. NO.
CA4-4

SHEET 51 OF 201

FILE	POCKET	FOLDER	NO.

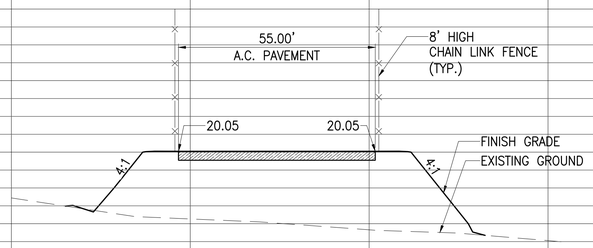

1 CA4-5 SECTION "1"
SCALE: HORIZ:1"=20'
VERT.: 1"=4'

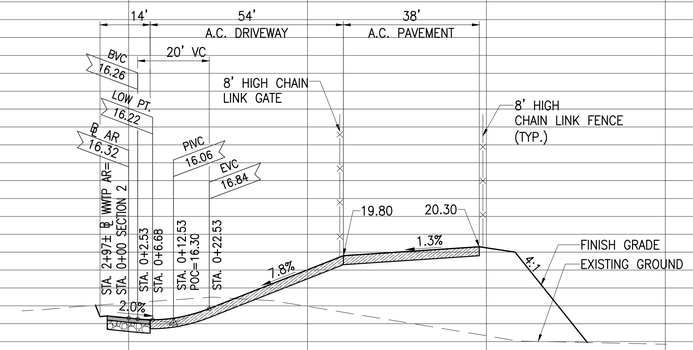

2 CA4-5 SECTION "2"
SCALE: HORIZ:1"=20'
VERT.: 1"=4'

DHHL SOUTH PUMP STATION SITE SECTIONS

SCALE: HORIZ:1"=20'
VERT.: 1"=4'

JOB NO. O-11-056.004
FN: Z:\2018\18-524 (16-576 PULEHUNUI NORTH SEWER_PHASE 6.3 WASTEWATER TREATMENT FACILITY) BRYAN\DWG\CA4-5 DHHL SOUTH PUMP STATION SITE SECTIONS.DWG

AustinTsutsumi
& ASSOCIATES, INC.
CIVIL ENGINEERS I SURVEYORS
HONOLULU I WAILUKU I HILO, HAWAII

501 SUMNER STREET, SUITE 521
HONOLULU, HAWAII 96817

PHONE: 808-533-3646
FAX: 808-526-1267

STATE OF HAWAII
DEPARTMENT OF
HAWAIIAN HOME LANDS

PŪLEHUNUI
REGIONAL
INFRASTRUCTURE

AUSTIN, TSUTSUMI & ASSOC., INC.
ENGINEERS, SURVEYORS • HONOLULU, HAWAII

BRYAN H. KOBA
LICENSED PROFESSIONAL ENGINEER
No. 14948
HAWAII U.S.A.

This work was prepared by me or under my supervision and construction of this project will be under my observation. (Observation of construction as defined in Chapter 16-115 Subchapter 1 Definitions of the Hawaii Administrative Rules "Professional Engineers, Architects, Surveyors, and Landscape Architects.")

SIGNATURE APRIL 30, 2020
EXP. DATE OF THE LICENSE

0 1 2
LINE IS 2 INCHES AT FULL SIZE
(If NOT 2-inches : Scale Accordingly)

REVISION	DATE	BRIEF	BY

Project No:	16-576
Scale:	AS NOTED
Date:	1/31/2020
Designed By:	BHK
Drawn By:	BHK
Checked By:	

DHHL SOUTH PUMP STATION
SITE SECTIONS

DWG. NO.
CA4-5

SHEET 52 OF 201

FILE	POCKET	FOLDER	NO.

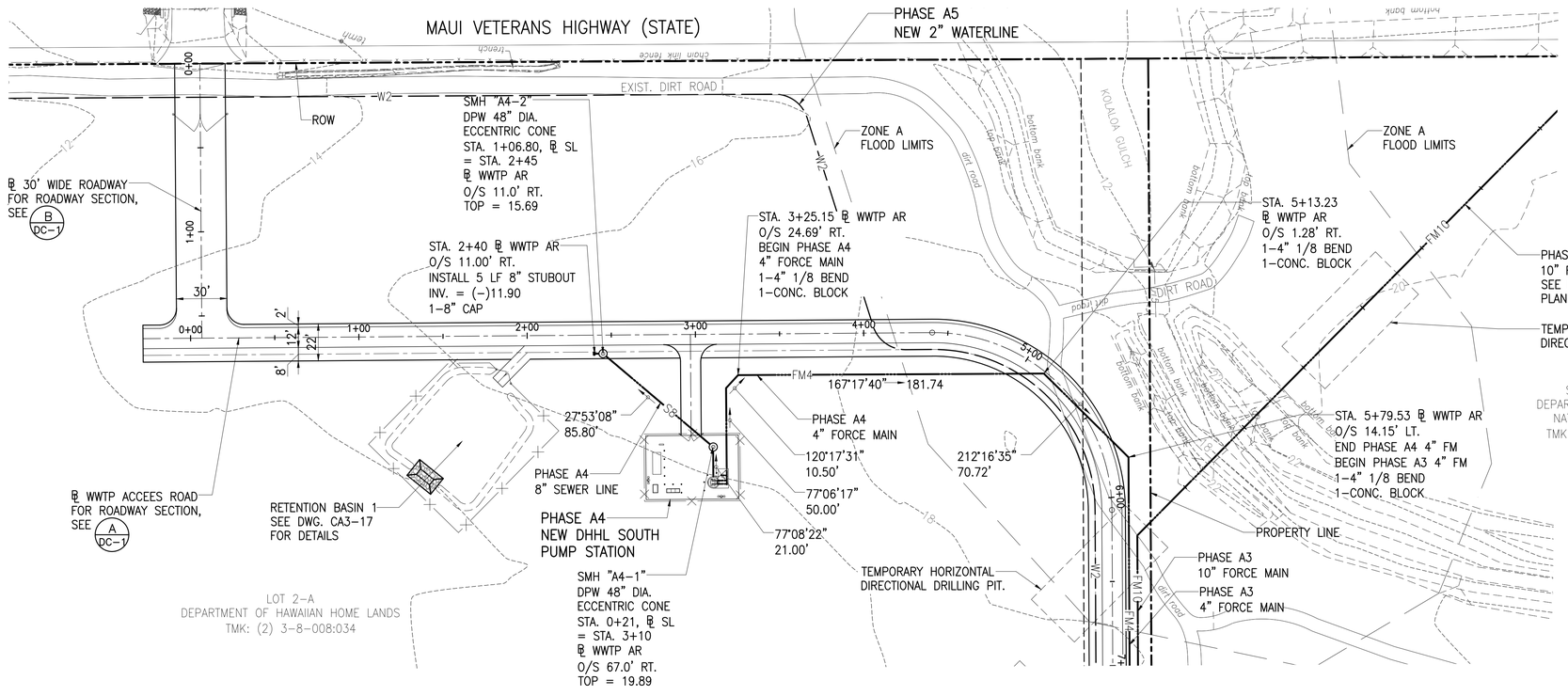

PLAN – PHASE A4 4" FORCE MAIN AND 8" SEWERLINE

SCALE: 1"=40'

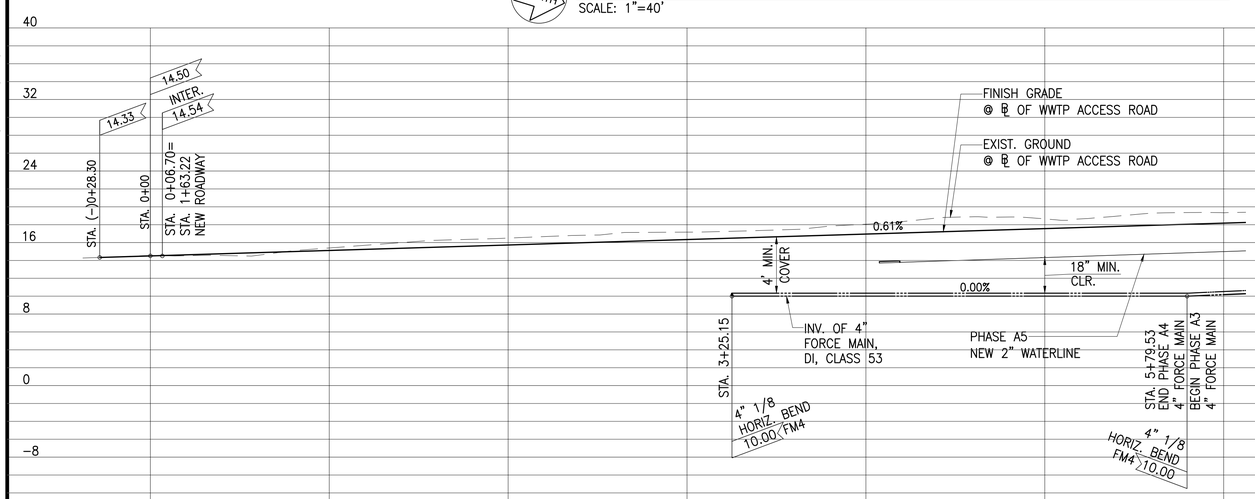

PROFILE – PHASE A4 4" FORCE MAIN

SCALE: HORIZ: 1"=40'
VERT.: 1"=8'

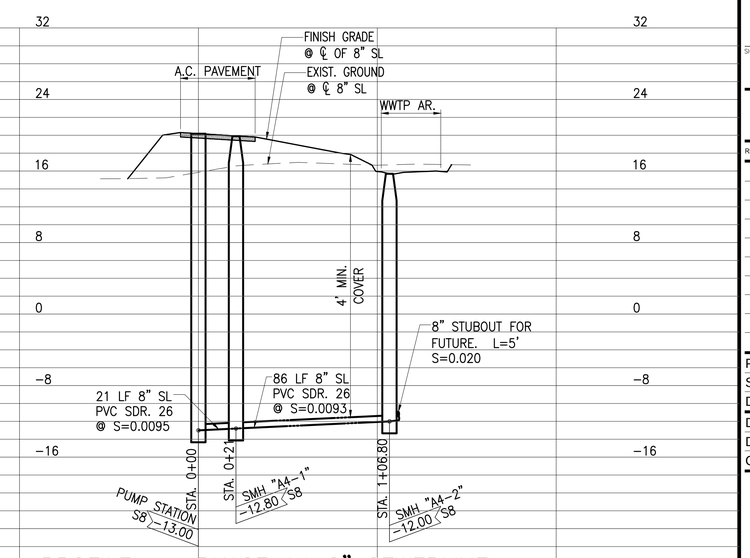

PROFILE – PHASE A4 8" SEWERLINE

SCALE: HORIZ: 1"=40'
VERT.: 1"=8'

AustinTsutsumi
& ASSOCIATES, INC.
CIVIL ENGINEERS I SURVEYORS
HONOLULU I WAILUKU I HILO, HAWAII

501 SUMNER STREET, SUITE 521
HONOLULU, HAWAII 96817

PHONE: 808-533-3646
FAX: 808-526-1267

STATE OF HAWAII
DEPARTMENT OF
HAWAIIAN HOME LANDS

PŪLEHUNUI
REGIONAL
INFRASTRUCTURE

AUSTIN, TSUTSUMI & ASSOC., INC.
ENGINEERS, SURVEYORS • HONOLULU, HAWAII

BRYAN H. KOBA
LICENSED PROFESSIONAL ENGINEER
No. 14948
HAWAII U.S.A.

This work was prepared by me or under my supervision and construction of this project will be under my observation. (Observation of construction as defined in Chapter 16-115 Subchapter 1 Definitions of the Hawaii Administrative Rules "Professional Engineers, Architects, Surveyors, and Landscape Architects.")

SIGNATURE — APRIL 30, 2020 EXP. DATE OF THE LICENSE

0 1 2
LINE IS 2 INCHES AT FULL SIZE
(If NOT 2-inches : Scale Accordingly)

REVISION	DATE	BRIEF	BY

Project No:	16-576
Scale:	AS NOTED
Date:	1/31/2020
Designed By:	BHK
Drawn By:	BHK
Checked By:	

PLAN AND PROFILE 4" FORCE MAIN AND 8" SEWERLINE

DWG. NO.
CA4-6

SHEET 53 OF 201

FILE	POCKET	FOLDER	NO.

JOB NO. 0-11-056.004
FN: Z:\2018\18-524 (16-576 PULEHUNUI NORTH SEWER_PHASE 6.3 WASTEWATER TREATMENT FACILITY) BRYAN\DWG\CA4-6 PP FM4 AND S8.DWG

PUMP MANUF.	NO. OF UNITS	TYPE	MODEL NO.	FLOW, GPM	STATIC, FT	TDH. FT	SPEED, RPM	Hp	PUMP EFF.	VAC	PHASE	FREQUENCY
FLYGT	TWO (2)	SUBMERSIBLE	NP 3202 SH 3-273	197	144	320	3550	72	30.0%	480	3	60Hz

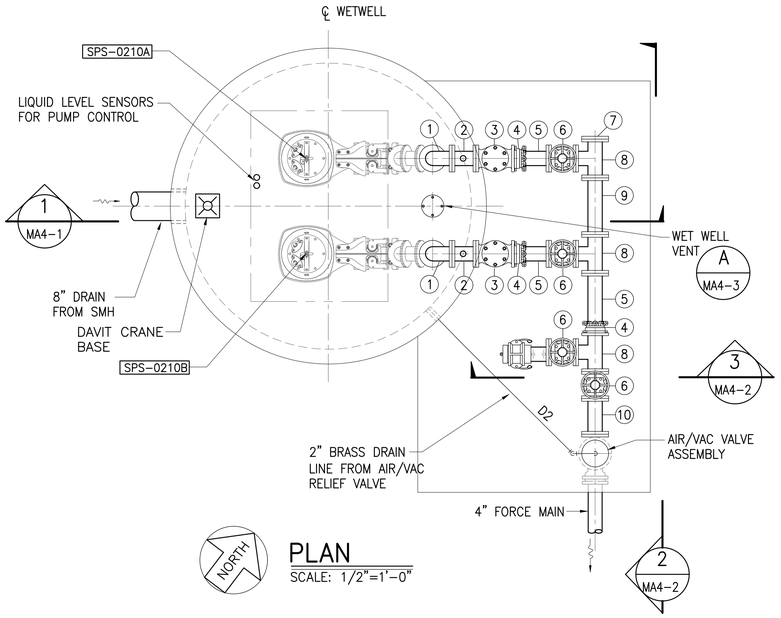

PLAN
SCALE: 1/2"=1'-0"

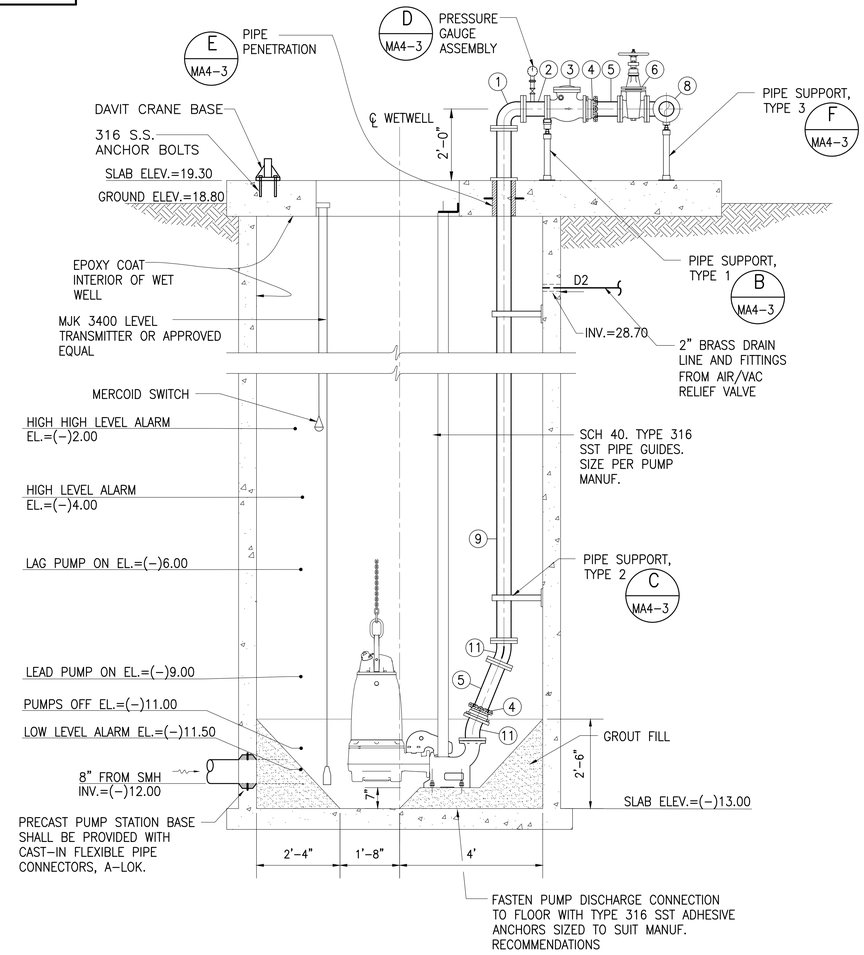

SECTION 1 (MA4-1)
SCALE: 1/2"=1'-0"

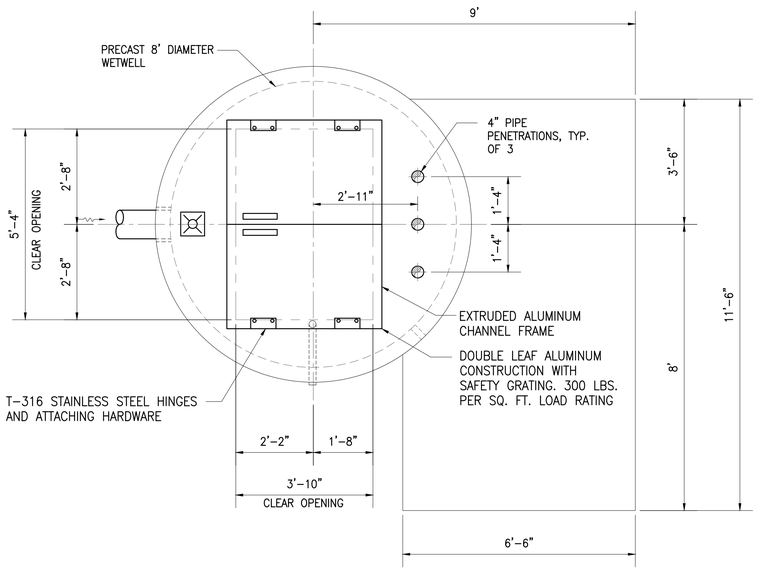

PLAN
SCALE: 1/2"=1'-0"

	SCHEDULE OF VALVES AND FITTINGS
NO.	DESCRIPTION
1	4" 1/4 BEND, DI, FE
2	4" SPOOL, DI, L=8", FE
3	4" SWING CHECK VALVE, APCO MODEL CVS-6000-AC OR APPROVED EQUAL
4	4" EBAA SERIES 2100 MEGA FLANGE
5	4" SPOOL, DI, LENGTH TO SUIT, FExPE
6	4" GATE VALVE, FE
7	4" BLIND FLANGE, DI
8	4" TEE, DI, FE
9	4" SPOOL, DI, L=1'-7", FE
10	4" SPOOL, DI, L=12", FE
11	4" 1/16 BEND, DI, FE
12	4" SPOOL, DI, LENGTH TO SUIT, FE

AustinTsutsumi & ASSOCIATES, INC.
CIVIL ENGINEERS I SURVEYORS
HONOLULU I WAILUKU I HILO, HAWAII
501 SUMNER STREET, SUITE 521
HONOLULU, HAWAII 96817
PHONE: 808-533-3646
FAX: 808-526-1267

STATE OF HAWAII
DEPARTMENT OF HAWAIIAN HOME LANDS

PŪLEHUNUI REGIONAL INFRASTRUCTURE

AUSTIN, TSUTSUMI & ASSOC., INC.
ENGINEERS, SUVEYORS • HONOLULU, HAWAII

BRYAN H. KOBA
LICENSED PROFESSIONAL ENGINEER
No. 14948
HAWAII U.S.A.

This work was prepared by me or under my supervision and construction of this project will be under my observation. (Observation of construction as defined in Chapter 16-115 Subchapter 1 Definitions of the Hawaii Administrative Rules "Professional Engineers, Architects, Surveyors, and Landscape Architects.")

SIGNATURE APRIL 30, 2020
EXP. DATE OF THE LICENSE

0 1 2
LINE IS 2 INCHES AT FULL SIZE
(If NOT 2-inches : Scale Accordingly)

REVISION	DATE	BRIEF	BY

Project No:	16-576
Scale:	AS NOTED
Date:	1/31/2020
Designed By:	BHK
Drawn By:	BHK
Checked By:	

DHHL SOUTH PUMP STATION PLAN AND SECTION

DWG. NO.
MA4-1

SHEET 54 OF 201

FILE	POCKET	FOLDER	NO.

JOB NO. 0-11-056.004
F/N: C:\PROJECT FOLDER\16-576 DHHL PROJECT\ENGINEERING\DWG\CONSTRUCTION DRAWING SET\MA4-1 DHHL SOUTH PUMP STATION PLAN AND SECTION.DWG

NO.	SCHEDULE OF VALVES AND FITTINGS DESCRIPTION
1	4" BLIND FLANGE, DI
2	4" TEE, D1, FE
3	4" SPOOL, DI, L=1'-7", FE
4	4" SPOOL, DI, LENGTH TO SUIT, FExPE
5	4" GATE VALVE, FE
6	4" SPOOL, DI, L=12", FE
7	4" BLIND FLANGE, DI, TAPPED FOR 2" THREADED PIPE

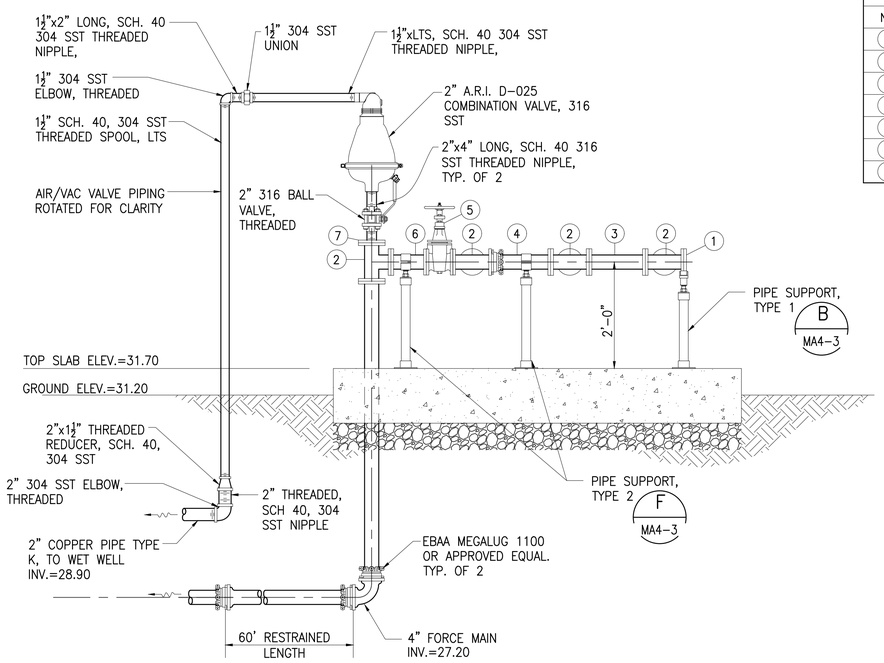

SECTION 2 MA4-2
SCALE: 3/4"=1'-0"

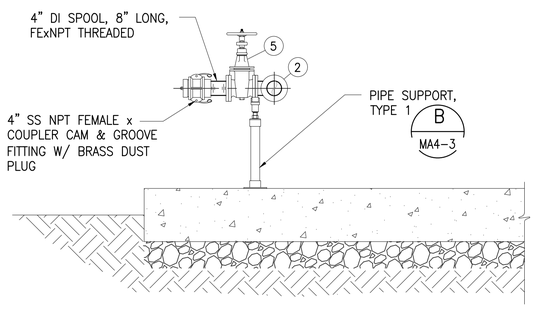

SECTION 3 MA4-2
SCALE: 3/4"=1'-0"

AustinTsutsumi & ASSOCIATES, INC.
CIVIL ENGINEERS I SURVEYORS
HONOLULU I WAILUKU I HILO, HAWAII
501 SUMNER STREET, SUITE 521
HONOLULU, HAWAII 96817
PHONE: 808-533-3646
FAX: 808-526-1267

STATE OF HAWAII
DEPARTMENT OF
HAWAIIAN HOME LANDS

PŪLEHUNUI
REGIONAL
INFRASTRUCTURE

AUSTIN, TSUTSUMI & ASSOC., INC.
ENGINEERS, SUVEYORS • HONOLULU, HAWAII

BRYAN H. KOBA
LICENSED PROFESSIONAL ENGINEER
No. 14948
HAWAII U.S.A.

This work was prepared by me or under my supervision and construction of this project will be under my observation. (Observation of construction as defined in Chapter 16-115 Subchapter 1 Definitions of the Hawaii Administrative Rules "Professional Engineers, Architects, Surveyors, and Landscape Architects.")

SIGNATURE APRIL 30, 2020 EXP. DATE OF THE LICENSE

0 1 2
LINE IS 2 INCHES AT FULL SIZE
(If NOT 2-inches : Scale Accordingly)

REVISION	DATE	BRIEF	BY

Project No:	16-576
Scale:	AS NOTED
Date:	1/31/2020
Designed By:	BHK
Drawn By:	BHK
Checked By:	

MECHANICAL DETAILS 1

DWG. NO.
MA4-2

SHEET 55 OF 201

FILE	POCKET	FOLDER	NO.

JOB NO. O-11-056.004
FN: C:\PROJECT FOLDER\16-576 DHHL PROJECT\ENGINEERING\DWG\CONSTRUCTION DRAWING SET\MA4-2 MECHANICAL DETAILS 1.DWG

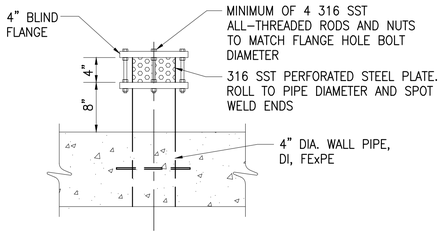

WET WELL VENT DETAIL (A / MA4-3)

NOT TO SCALE

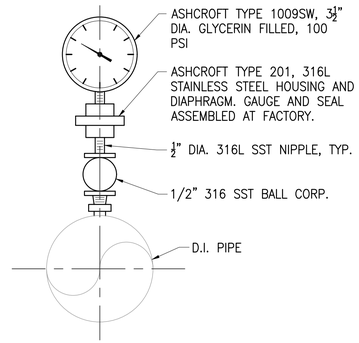

PRESSURE GAUGE (D / MA4-3)

NOT TO SCALE

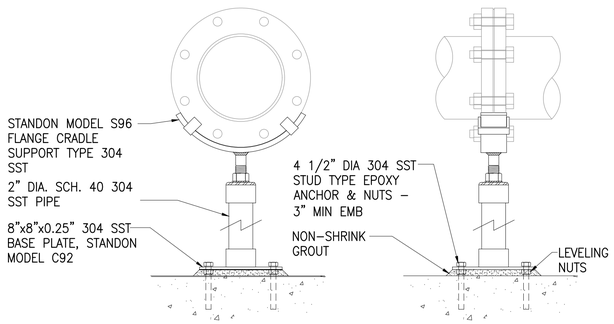

PIPE SUPPORT, TYPE 1 (B / MA4-3)

NOT TO SCALE

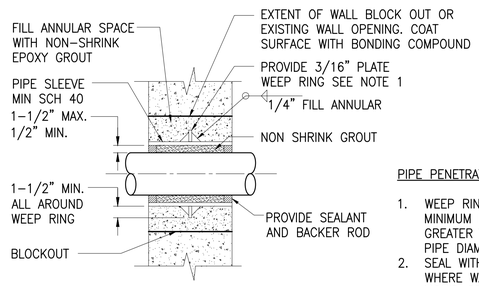

PIPE PENETRATION NOTES:

1. WEEP RINGS SHALL HAVE A MINIMUM DIAMETER 3 INCHES GREATER THAN THE OUTSIDE PIPE DIAMETER.
2. SEAL WITH MASTIC SEALANT WHERE WALL IS EXPOSED TO LIQUID OR EARTH.

PIPE PENETRATION DETAIL (E / MA4-3)

NOT TO SCALE

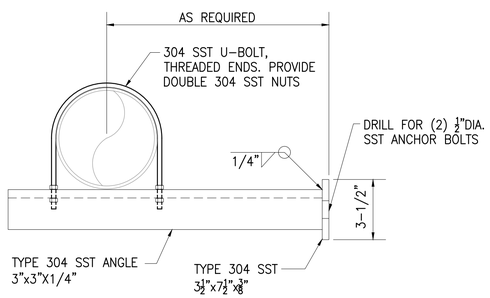

PIPE SUPPORT, TYPE 2 (C / MA4-3)

NOT TO SCALE

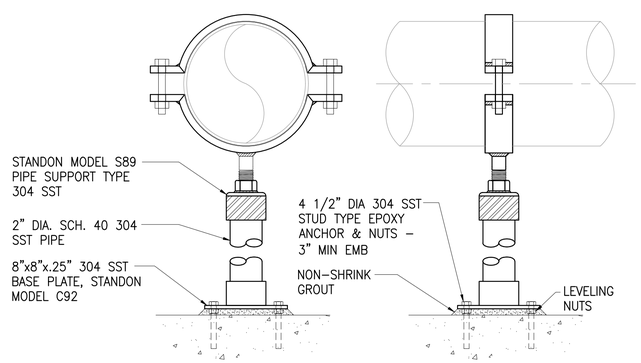

PIPE SUPPORT, TYPE 3 (F / MA4-3)

NOT TO SCALE

AustinTsutsumi & ASSOCIATES, INC.
CIVIL ENGINEERS I SURVEYORS
HONOLULU I WAILUKU I HILO, HAWAII

501 SUMNER STREET, SUITE 521
HONOLULU, HAWAII 96817

PHONE: 808-533-3646
FAX: 808-526-1267

STATE OF HAWAII
DEPARTMENT OF
HAWAIIAN HOME LANDS

PŪLEHUNUI
REGIONAL
INFRASTRUCTURE

AUSTIN, TSUTSUMI & ASSOC., INC.
ENGINEERS, SUVEYORS • HONOLULU, HAWAII

BRYAN H. KOBA
LICENSED PROFESSIONAL ENGINEER
No. 14948
HAWAII U.S.A.

This work was prepared by me or under my supervision and construction of this project will be under my observation. (Observation of construction as defined in Chapter 16-115 Subchapter 1 Definitions of the Hawaii Administrative Rules "Professional Engineers, Architects, Surveyors, and Landscape Architects.")

SIGNATURE — APRIL 30, 2020 EXP. DATE OF THE LICENSE

0 1 2
LINE IS 2 INCHES AT FULL SIZE
(If NOT 2-inches : Scale Accordingly)

REVISION	DATE	BRIEF	BY

Project No:	16-576
Scale:	AS NOTED
Date:	1/31/2020
Designed By:	BHK
Drawn By:	BHK
Checked By:	

MECHANICAL DETAILS 2

DWG. NO.

MA4-3

SHEET 56 OF 201

FILE	POCKET	FOLDER	NO.

JOB NO. O-11-056.004
FN: C:\PROJECT FOLDER\16-576 DHHL PROJECT\ENGINEERING\DWG\CONSTRUCTION DRAWING SET\MA4-3 MECHANICAL DETAILS 2.DWG

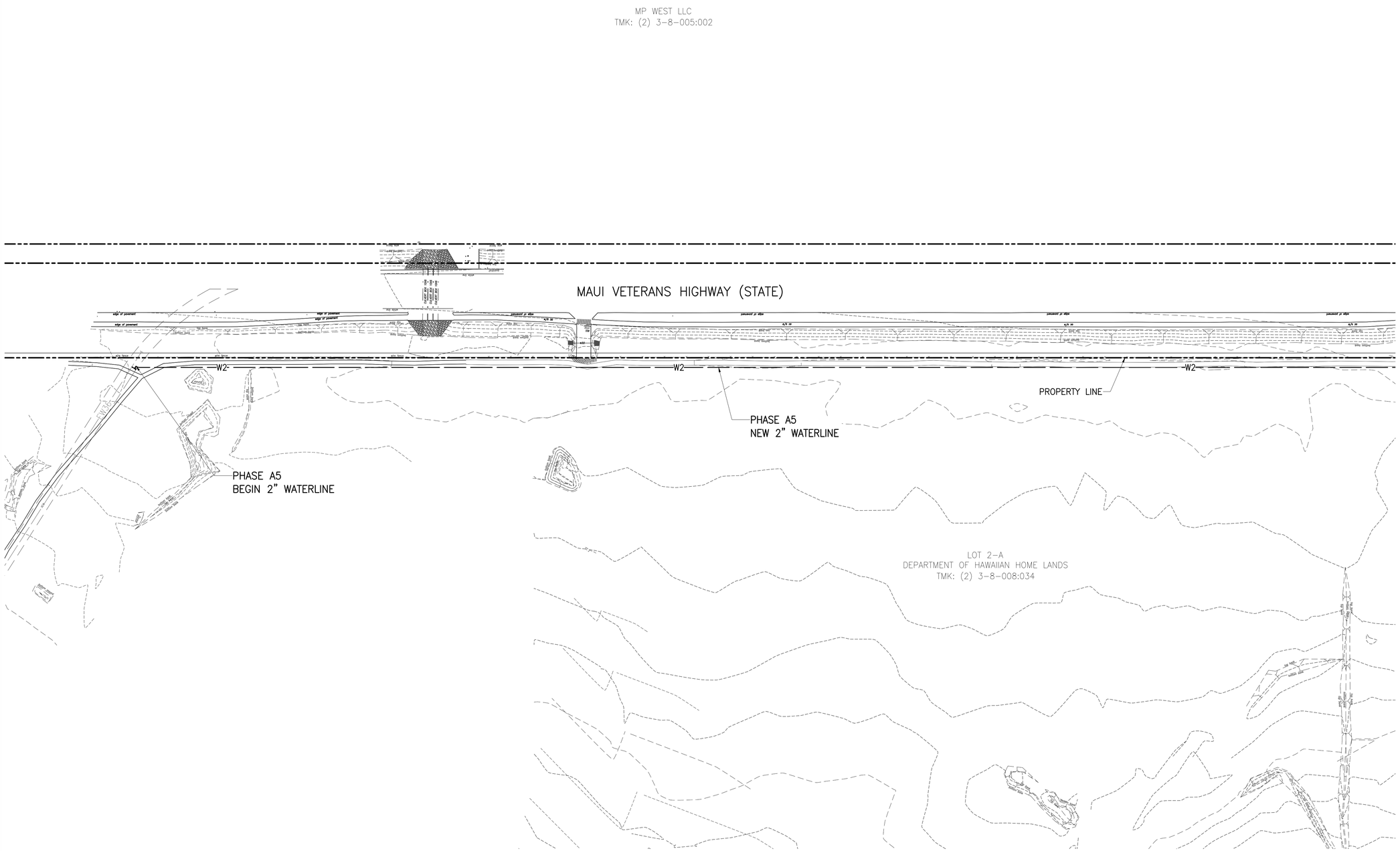

PHASE A5–DHHL WATERLINE SITE PLAN – 1

SCALE: 1"=100'

AustinTsutsumi
& ASSOCIATES, INC.
CIVIL ENGINEERS I SURVEYORS
HONOLULU I WAILUKU I HILO, HAWAII

501 SUMNER STREET, SUITE 521
HONOLULU, HAWAII 96817

PHONE: 808-533-3646
FAX: 808-526-1267

STATE OF HAWAII
DEPARTMENT OF
HAWAIIAN HOME LANDS

PŪLEHUNUI
REGIONAL
INFRASTRUCTURE

AUSTIN, TSUTSUMI & ASSOC., INC.
ENGINEERS, SURVEYORS • HONOLULU, HAWAII

BRYAN H. KOBA
LICENSED PROFESSIONAL ENGINEER
No. 14948
HAWAII U.S.A.

This work was prepared by me or under my supervision and construction of this project will be under my observation. (Observation of construction as defined in Chapter 16-115 Subchapter 1 Definitions of the Hawaii Administrative Rules "Professional Engineers, Architects, Surveyors, and Landscape Architects.")

SIGNATURE — APRIL 30, 2020 EXP. DATE OF THE LICENSE

0 1 2
LINE IS 2 INCHES AT FULL SIZE
(If NOT 2-inches : Scale Accordingly)

REVISION	DATE	BRIEF	BY

Project No:	16-576
Scale:	AS NOTED
Date:	1/31/2020
Designed By:	BHK
Drawn By:	BHK
Checked By:	

PHASE A5 DHHL WATERLINE SITE PLAN – 1

DWG. NO.

CA5-1

SHEET 57 OF 201

FILE	POCKET	FOLDER	NO.

JOB NO. O-11-056.004
FN: Z:\2018\18-524 (16-576 PULEHUNUI NORTH SEWER_PHASE 6.3 WASTEWATER TREATMENT FACILITY) BRYAN\DWG\CA5-1 PHASE A5 DHHL WATERLINE SITE PLAN - 1.DWG

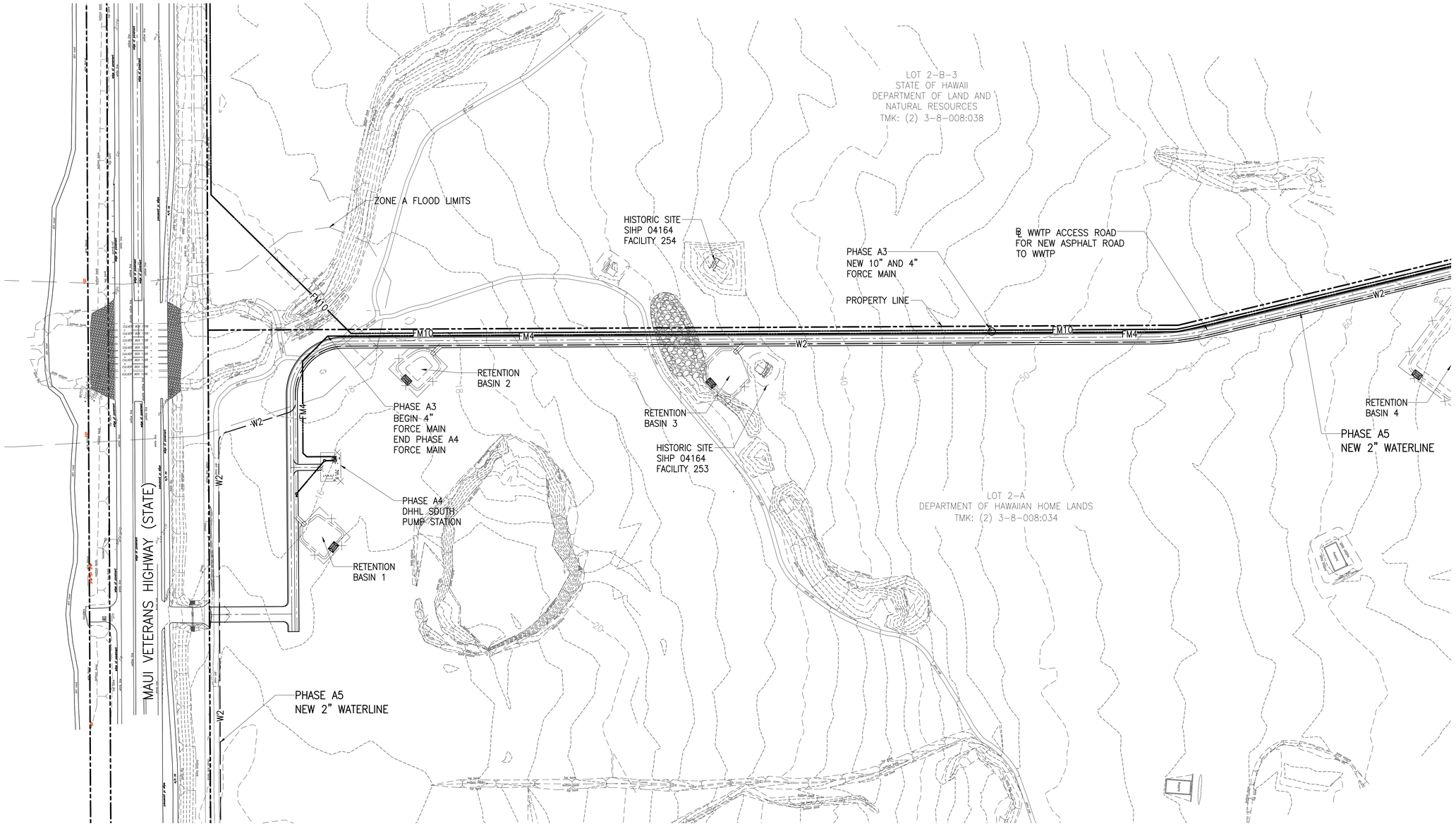

PHASE A5-DHHL WATERLINE SITE PLAN – 2

SCALE: 1"=100'

AustinTsutsumi
& ASSOCIATES, INC.
CIVIL ENGINEERS I SURVEYORS
HONOLULU I WAILUKU I HILO, HAWAII

501 SUMNER STREET, SUITE 521
HONOLULU, HAWAII 96817

PHONE: 808-533-3646
FAX: 808-526-1267

STATE OF HAWAII
DEPARTMENT OF
HAWAIIAN HOME LANDS

PŪLEHUNUI
REGIONAL
INFRASTRUCTURE

AUSTIN, TSUTSUMI & ASSOC., INC.
ENGINEERS, SURVEYORS • HONOLULU, HAWAII

BRYAN H. KOBA
LICENSED PROFESSIONAL ENGINEER
No. 14948
HAWAII U.S.A.

This work was prepared by me or under my supervision and construction of this project will be under my observation. (Observation of construction as defined in Chapter 16-115 Subchapter 1 Definitions of the Hawaii Administrative Rules "Professional Engineers, Architects, Surveyors, and Landscape Architects.").

SIGNATURE — APRIL 30, 2020 EXP. DATE OF THE LICENSE

0 1 2
LINE IS 2 INCHES AT FULL SIZE
(If NOT 2-inches : Scale Accordingly)

REVISION	DATE	BRIEF	BY

Project No:	16-576
Scale:	AS NOTED
Date:	1/31/2020
Designed By:	BHK
Drawn By:	BHK
Checked By:	

PHASE A5 DHHL
WATERLINE SITE PLAN – 2

DWG. NO.

CA5-2

SHEET 58 OF 201

FILE	POCKET	FOLDER	NO.

JOB NO. 0-11-056.004
FN: Z:\2018\18-524 (16-576 PULEHUNUI NORTH SEWER_PHASE 6.3 WASTEWATER TREATMENT FACILITY) BRYAN\DWG\CA5-2 PHASE A5 DHHL WATERLINE SITE PLAN – 2.DWG

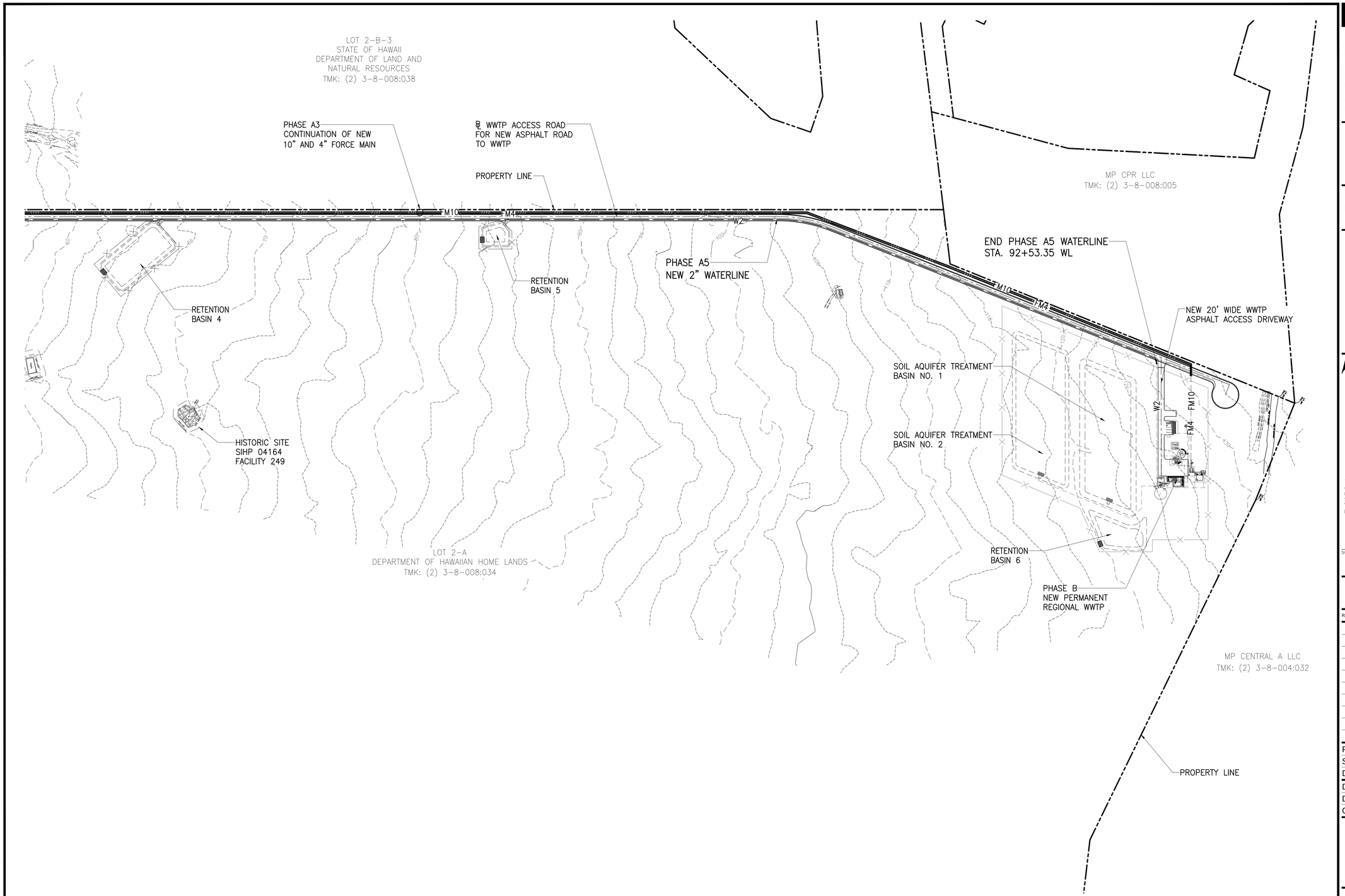

PHASE A5-DHHL WATERLINE SITE PLAN – 3

SCALE: 1"=150'

AustinTsutsumi
& ASSOCIATES, INC.
CIVIL ENGINEERS I SURVEYORS
HONOLULU I WAILUKU I HILO, HAWAII

501 SUMNER STREET, SUITE 521
HONOLULU, HAWAII 96817

PHONE: 808-533-3646
FAX: 808-526-1267

STATE OF HAWAII
DEPARTMENT OF
HAWAIIAN HOME LANDS

PŪLEHUNUI
REGIONAL
INFRASTRUCTURE

AUSTIN, TSUTSUMI & ASSOC., INC.
ENGINEERS, SUVEYORS • HONOLULU, HAWAII

BRYAN H. KOBA
LICENSED PROFESSIONAL ENGINEER
No. 14948
HAWAII U.S.A.

This work was prepared by me or under my supervision and construction of this project will be under my observation. (Observation of construction as defined in Chapter 16-115 Subchapter 1 Definitions of the Hawaii Administrative Rules "Professional Engineers, Architects, Surveyors, and Landscape Architects.")

SIGNATURE — APRIL 30, 2020 EXP. DATE OF THE LICENSE

0 1 2
LINE IS 2 INCHES AT FULL SIZE
(If NOT 2-inches : Scale Accordingly)

REVISION	DATE	BRIEF	BY

Project No:	16-576
Scale:	AS NOTED
Date:	1/31/2020
Designed By:	BHK
Drawn By:	BHK
Checked By:	

PHASE A5 DHHL
WATERLINE SITE PLAN – 3

DWG. NO.
CA5-3

SHEET 59 OF 201

FILE	POCKET	FOLDER	NO.

JOB NO. 0-11-056.004
FN: Z:\2018\18-524 (16-576 PULEHUNUI NORTH SEWER_PHASE 6.3 WASTEWATER TREATMENT FACILITY) BRYAN\DWG\CA5-3 PHASE A5 DHHL WATERLINE SITE PLAN – 3.DWG

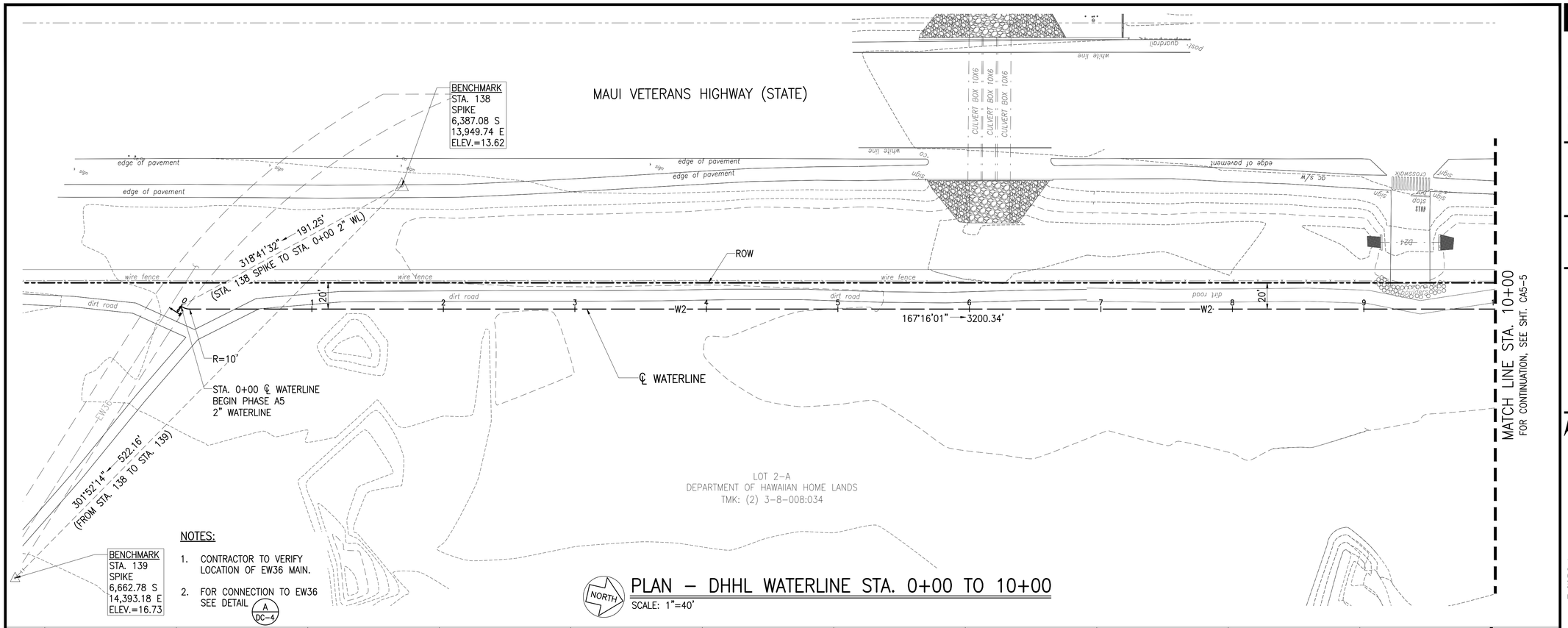

BENCHMARK
STA. 139
SPIKE
6,662.78 S
14,393.18 E
ELEV.=16.73

NOTES:

1. CONTRACTOR TO VERIFY LOCATION OF EW36 MAIN.
2. FOR CONNECTION TO EW36 SEE DETAIL A/DC-4

NORTH

PLAN – DHHL WATERLINE STA. 0+00 TO 10+00

SCALE: 1"=40'

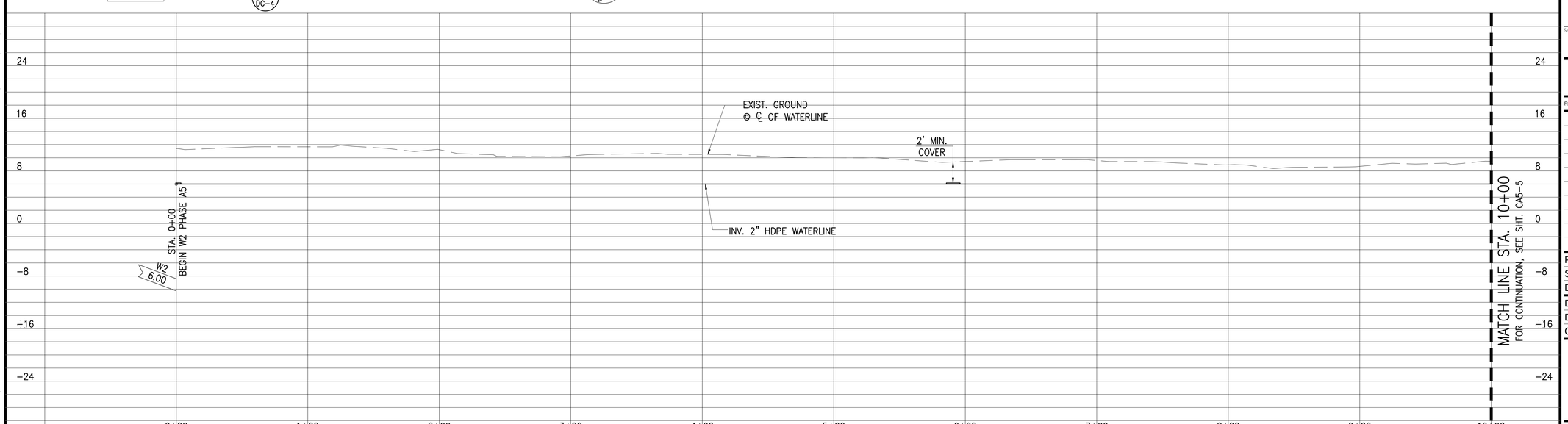

PROFILE – DHHL WATERLINE STA. 0+00 TO 10+00

SCALE: HORIZ: 1"=40'
VERT.: 1"=8'

AustinTsutsumi
& ASSOCIATES, INC.
CIVIL ENGINEERS I SURVEYORS
HONOLULU I WAILUKU I HILO, HAWAII

501 SUMNER STREET, SUITE 521
HONOLULU, HAWAII 96817

PHONE: 808-533-3646
FAX: 808-526-1267

STATE OF HAWAII
DEPARTMENT OF
HAWAIIAN HOME LANDS

PŪLEHUNUI
REGIONAL
INFRASTRUCTURE

AUSTIN, TSUTSUMI & ASSOC., INC.
ENGINEERS, SUVEYORS • HONOLULU, HAWAII

BRYAN H. KOBA
LICENSED PROFESSIONAL ENGINEER
No. 14948
HAWAII U.S.A.

This work was prepared by me or under my supervision and construction of this project will be under my observation. (Observation of construction as defined in Chapter 16-115 Subchapter 1 Definitions of the Hawaii Administrative Rules "Professional Engineers, Architects, Surveyors, and Landscape Architects.")

SIGNATURE — APRIL 30, 2020 EXP. DATE OF THE LICENSE

0 1 2
LINE IS 2 INCHES AT FULL SIZE
(If NOT 2-inches : Scale Accordingly)

REVISION	DATE	BRIEF	BY

Project No:	16-576
Scale:	AS NOTED
Date:	1/31/2020
Designed By:	BHK
Drawn By:	BHK
Checked By:	

PLAN AND PROFILE
DHHL WATERLINE
STA. 0+00 TO 10+00

DWG. NO.

CA5-4

SHEET 60 OF 201

FILE	POCKET	FOLDER	NO.

JOB NO. 0-11-056.004
FN: Z:\2018\18-524 (16-576 PULEHUNUI NORTH SEWER_PHASE 6.3 WASTEWATER TREATMENT FACILITY) BRYAN\DWG\CA5-4 PP DHHL WATERLINE STA 0+00 TO 10+00.DWG

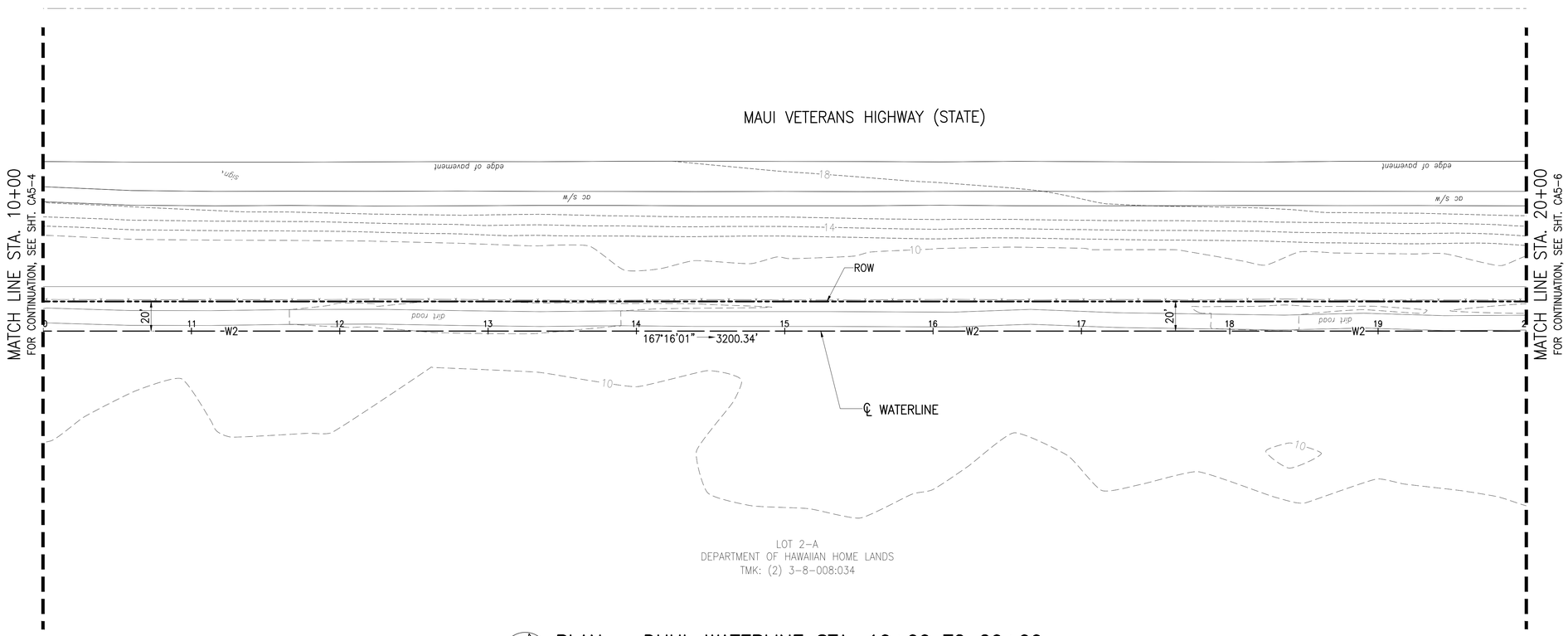

PLAN – DHHL WATERLINE STA. 10+00 TO 20+00

SCALE: 1"=40'

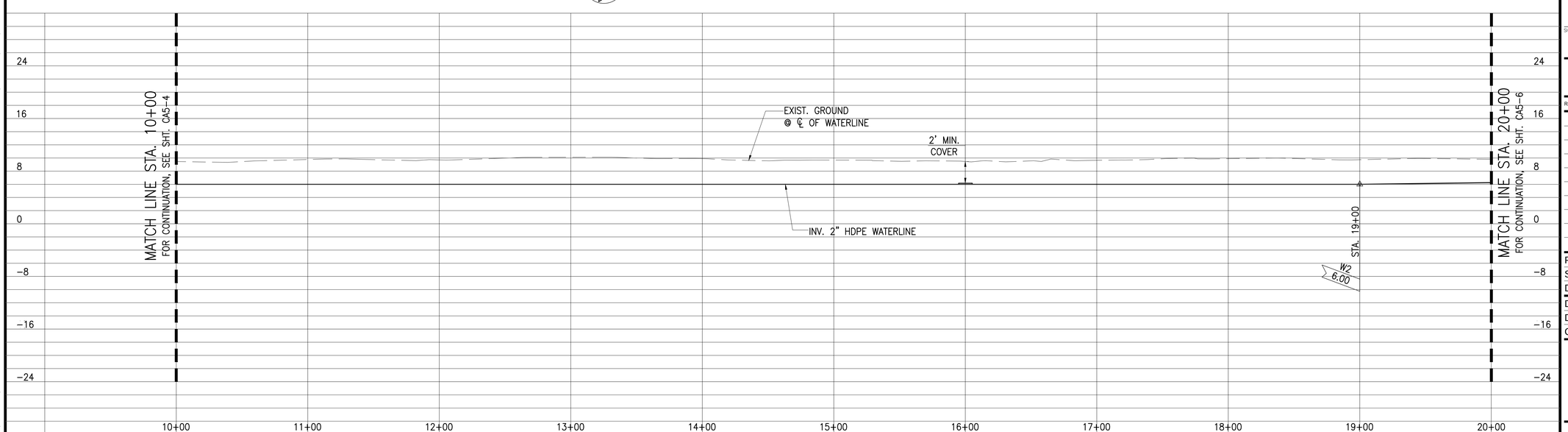

PROFILE – DHHL WATERLINE STA. 10+00 TO 20+00

SCALE: HORIZ: 1"=40'
VERT.: 1"=8'

AustinTsutsumi
& ASSOCIATES, INC.
CIVIL ENGINEERS I SURVEYORS
HONOLULU I WAILUKU I HILO, HAWAII

501 SUMNER STREET, SUITE 521
HONOLULU, HAWAII 96817

PHONE: 808-533-3646
FAX: 808-526-1267

STATE OF HAWAII
DEPARTMENT OF
HAWAIIAN HOME LANDS

PŪLEHUNUI REGIONAL INFRASTRUCTURE

AUSTIN, TSUTSUMI & ASSOC., INC.
ENGINEERS, SUVEYORS • HONOLULU, HAWAII

BRYAN H. KOBA
LICENSED PROFESSIONAL ENGINEER
No. 14948
HAWAII U.S.A.

This work was prepared by me or under my supervision and construction of this project will be under my observation. (Observation of construction as defined in Chapter 16-115 Subchapter 1 Definitions of the Hawaii Administrative Rules "Professional Engineers, Architects, Surveyors, and Landscape Architects.")

SIGNATURE — APRIL 30, 2020 EXP. DATE OF THE LICENSE

0 1 2
LINE IS 2 INCHES AT FULL SIZE
(If NOT 2-inches : Scale Accordingly)

REVISION	DATE	BRIEF	BY

Project No:	16-576
Scale:	AS NOTED
Date:	1/31/2020
Designed By:	BHK
Drawn By:	BHK
Checked By:	

PLAN AND PROFILE
DHHL WATERLINE
STA. 10+00 TO 20+00

DWG. NO.

CA5-5

SHEET 61 OF 201

FILE	POCKET	FOLDER	NO.

JOB NO. 0-11-056.004
FN: Z:\2018\18-524 (16-576 PULEHUNUI NORTH SEWER_PHASE 6.3 WASTEWATER TREATMENT FACILITY) BRYAN\DWG\CA5-5 PP DHHL WATERLINE STA 10+00 TO 20+00.DWG

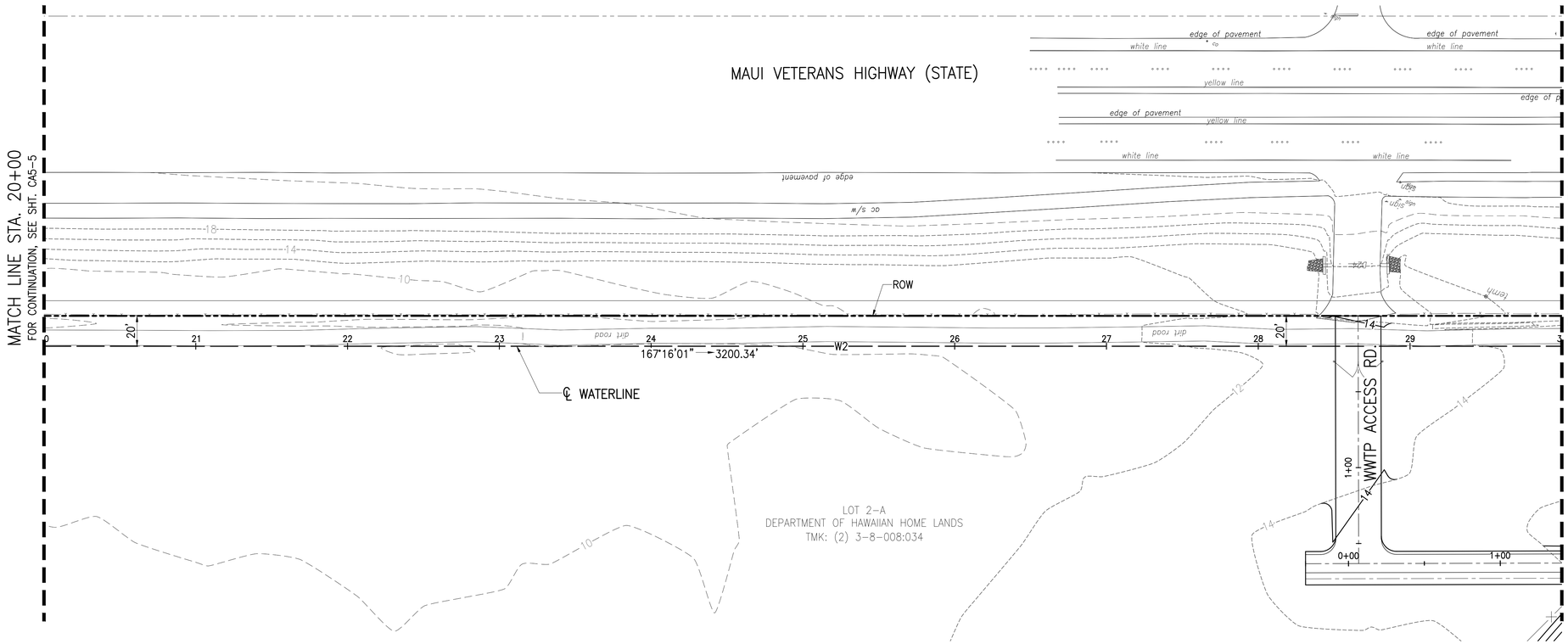

PLAN – DHHL WATERLINE STA. 20+00 TO 30+00

SCALE: 1"=40'

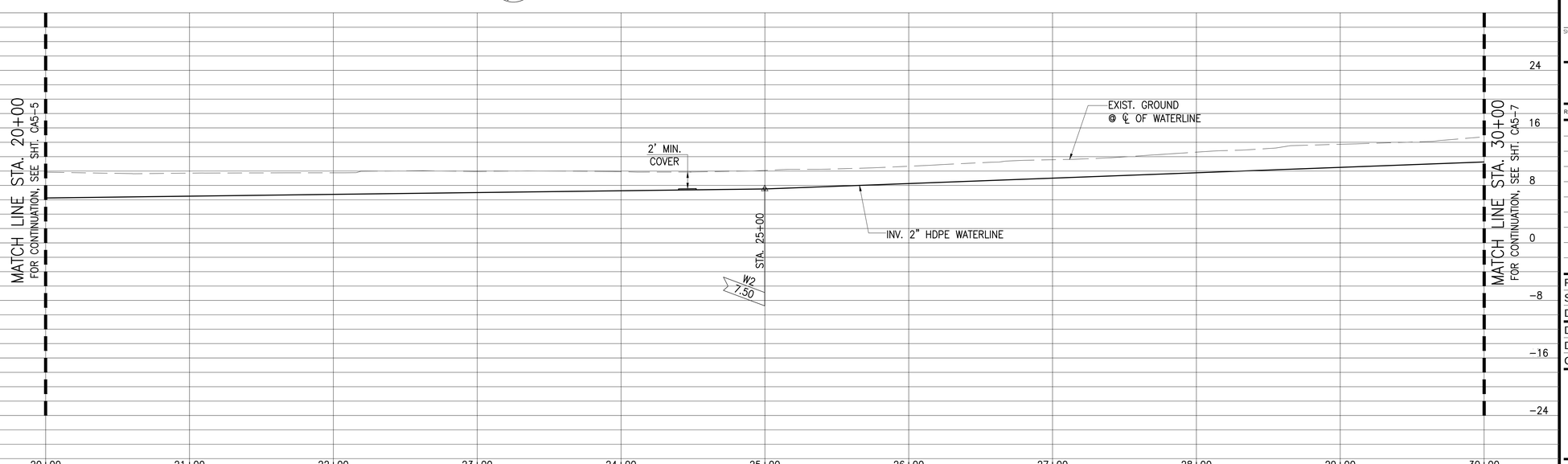

PROFILE – DHHL WATERLINE STA. 20+00 TO 30+00

SCALE: HORIZ: 1"=40'
VERT.: 1"=8'

AustinTsutsumi
& ASSOCIATES, INC.
CIVIL ENGINEERS I SURVEYORS
HONOLULU I WAILUKU I HILO, HAWAII

501 SUMNER STREET, SUITE 521
HONOLULU, HAWAII 96817

PHONE: 808-533-3646
FAX: 808-526-1267

STATE OF HAWAII
DEPARTMENT OF
HAWAIIAN HOME LANDS

PŪLEHUNUI REGIONAL INFRASTRUCTURE

AUSTIN, TSUTSUMI & ASSOC., INC.
ENGINEERS, SURVEYORS • HONOLULU, HAWAII

BRYAN H. KOBA
LICENSED PROFESSIONAL ENGINEER
No. 14948
HAWAII U.S.A.

This work was prepared by me or under my supervision and construction of this project will be under my observation. (Observation of construction as defined in Chapter 16-115 Subchapter 1 Definitions of the Hawaii Administrative Rules "Professional Engineers, Architects, Surveyors, and Landscape Architects.")

SIGNATURE — APRIL 30, 2020 EXP. DATE OF THE LICENSE

0 1 2
LINE IS 2 INCHES AT FULL SIZE
(If NOT 2-inches : Scale Accordingly)

REVISION	DATE	BRIEF	BY

Project No:	16-576
Scale:	AS NOTED
Date:	1/31/2020
Designed By:	BHK
Drawn By:	BHK
Checked By:	

PLAN AND PROFILE
DHHL WATERLINE
STA. 20+00 TO 30+00

DWG. NO.

CA5-6

SHEET OF 201

FILE	POCKET	FOLDER	NO.

JOB NO. 0-11-056.004
FN: Z:\2018\18-524 (16-576 PULEHUNUI NORTH SEWER_PHASE 6.3 WASTEWATER TREATMENT FACILITY) BRYAN\DWG\CA5-6 PP DHHL WATERLINE STA 20+00 TO 30+00.DWG

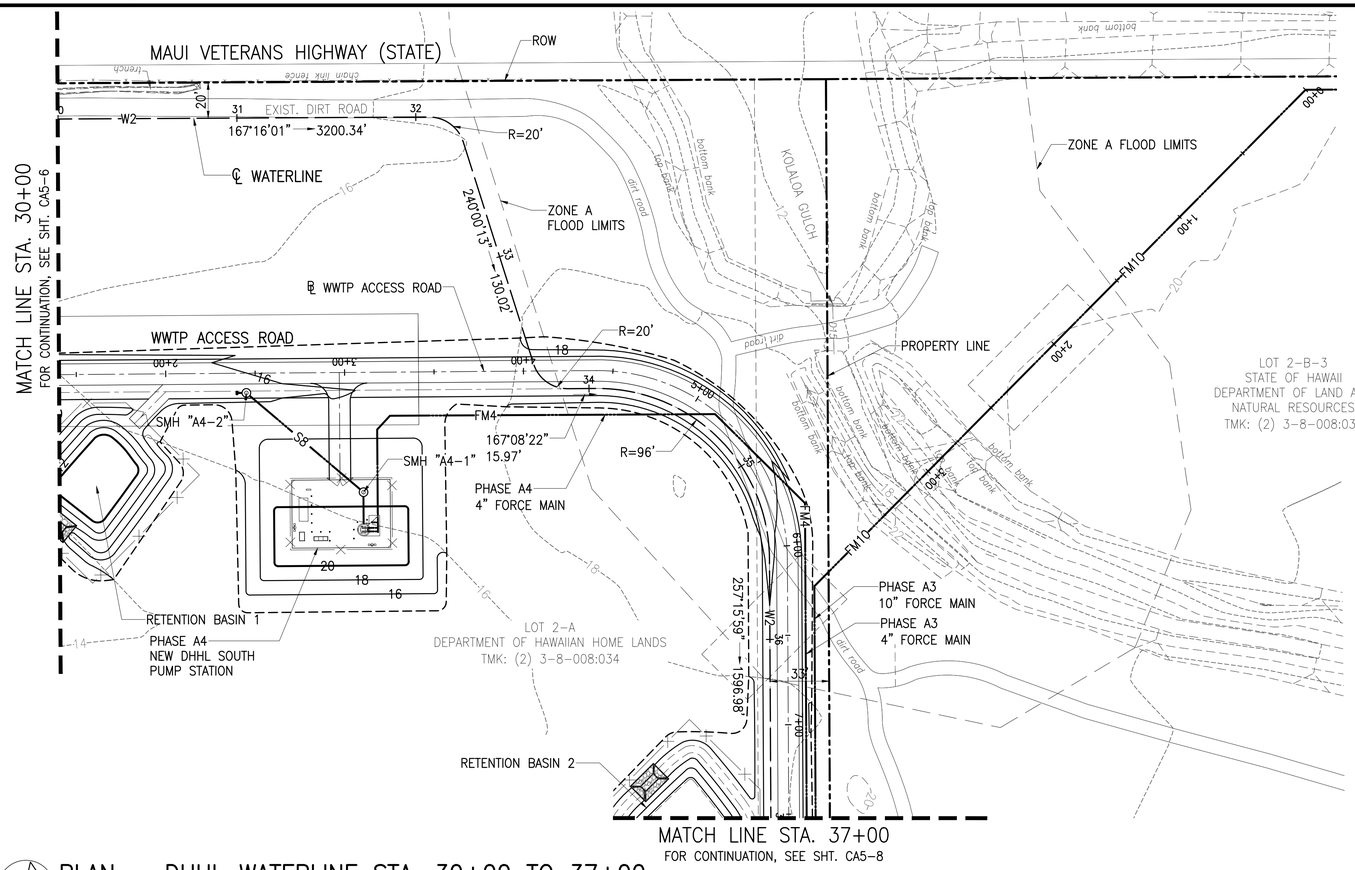

PLAN – DHHL WATERLINE STA. 30+00 TO 37+00

SCALE: 1"=40'

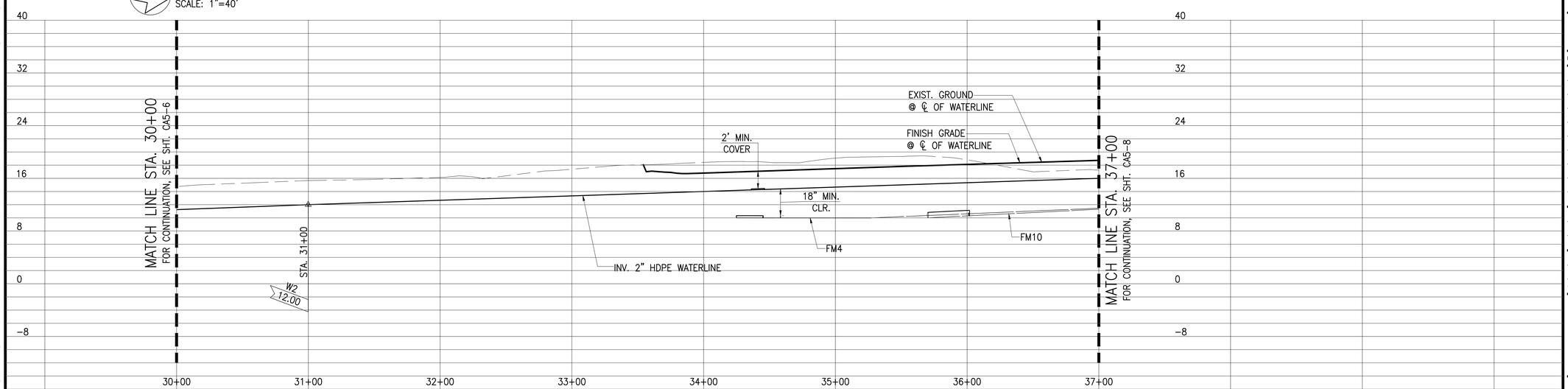

PROFILE – DHHL WATERLINE STA. 30+00 TO 37+00

SCALE: HORIZ: 1"=40'
VERT.: 1"=8'

AustinTsutsumi
& ASSOCIATES, INC.
CIVIL ENGINEERS I SURVEYORS
HONOLULU I WAILUKU I HILO, HAWAII

501 SUMNER STREET, SUITE 521
HONOLULU, HAWAII 96817

PHONE: 808-533-3646
FAX: 808-526-1267

STATE OF HAWAII
DEPARTMENT OF
HAWAIIAN HOME LANDS

PŪLEHUNUI
REGIONAL
INFRASTRUCTURE

AUSTIN, TSUTSUMI & ASSOC., INC.
ENGINEERS, SURVEYORS • HONOLULU, HAWAII

BRYAN H. KOBA
LICENSED PROFESSIONAL ENGINEER
No. 14948
HAWAII U.S.A.

This work was prepared by me or under my supervision and construction of this project will be under my observation. (Observation of construction as defined in Chapter 16-115 Subchapter 1 Definitions of the Hawaii Administrative Rules "Professional Engineers, Architects, Surveyors, and Landscape Architects.")

SIGNATURE — APRIL 30, 2020 EXP. DATE OF THE LICENSE

0 1 2
LINE IS 2 INCHES AT FULL SIZE
(If NOT 2-inches : Scale Accordingly)

REVISION	DATE	BRIEF	BY

Project No:	16-576
Scale:	AS NOTED
Date:	1/31/2020
Designed By:	BHK
Drawn By:	BHK
Checked By:	

PLAN AND PROFILE
DHHL WATERLINE
STA. 30+00 TO 37+00

DWG. NO.
CA5-7

SHEET 63 OF 201

FILE	POCKET	FOLDER	NO.

JOB NO. 0-11-056.004
FN: Z:\2018\18-524 (16-576 PULEHUNUI NORTH SEWER_PHASE 6.3 WASTEWATER TREATMENT FACILITY) BRYAN\DWG\CA5-7 PP DHHL WATERLINE STA 30+00 TO 37+00.DWG

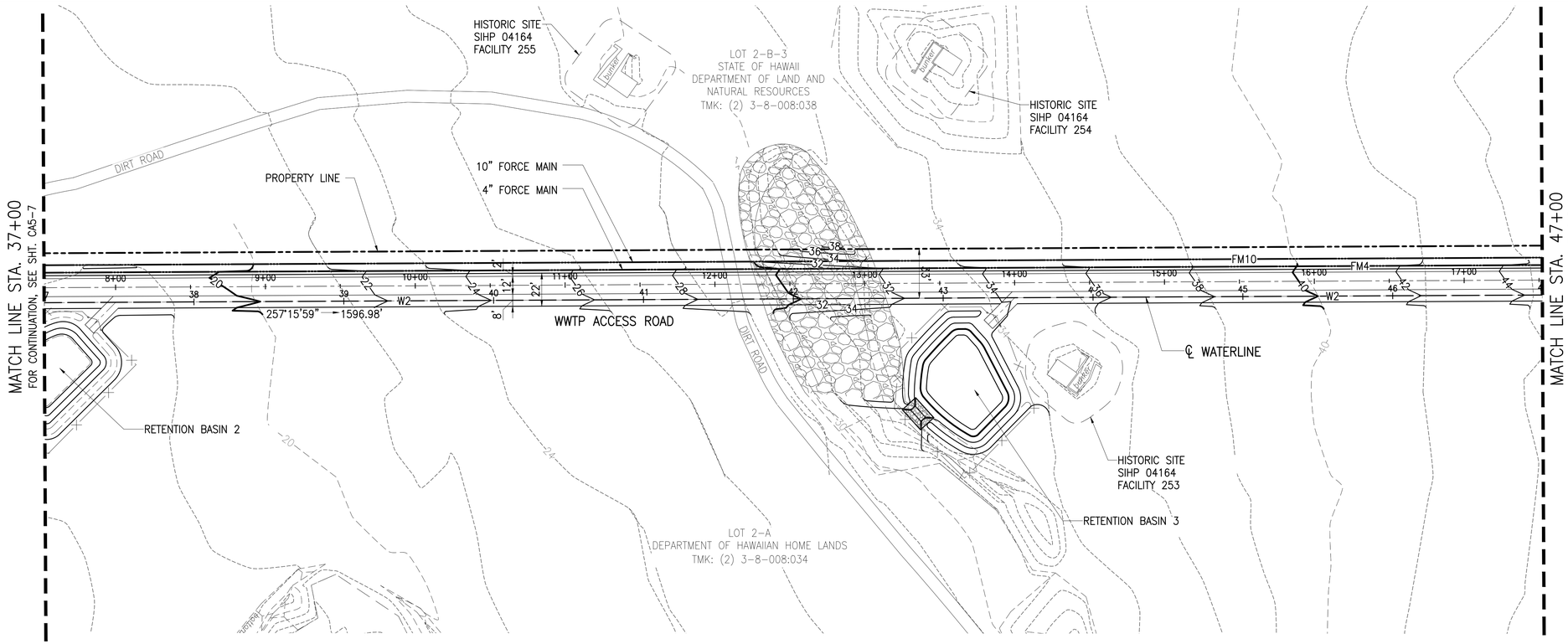

PLAN – DHHL WATERLINE STA. 37+00 TO 47+00

SCALE: 1"=40'

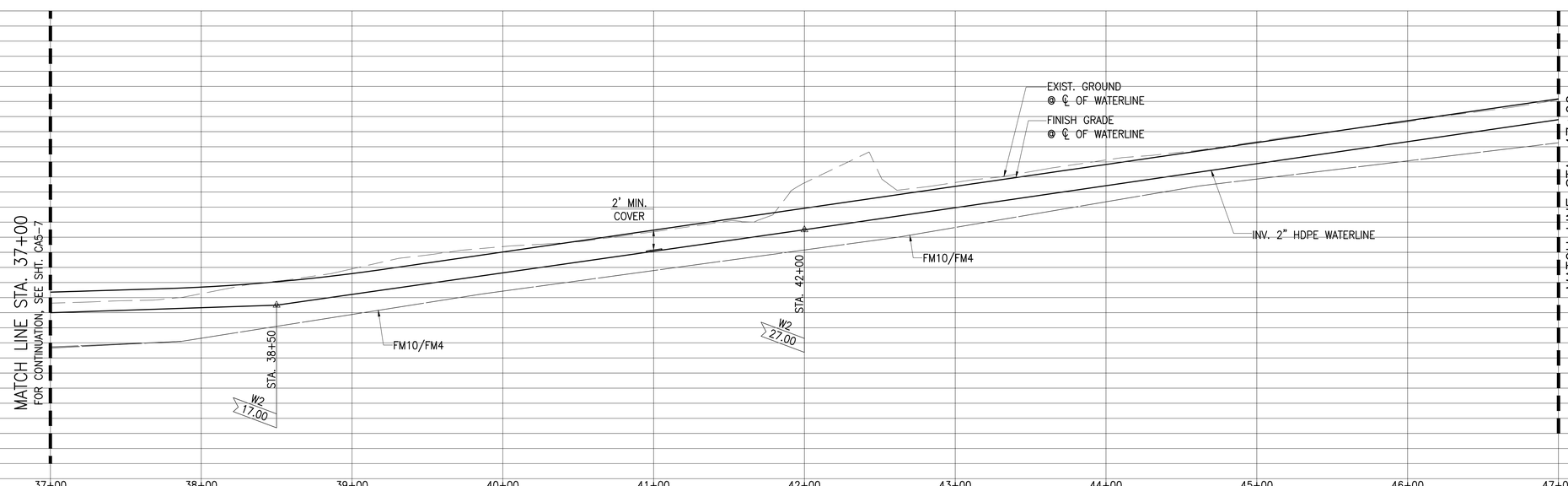

PROFILE – DHHL WATERLINE STA. 37+00 TO 47+00

SCALE: HORIZ: 1"=40'
VERT.: 1"=8'

AustinTsutsumi
& ASSOCIATES, INC.
CIVIL ENGINEERS I SURVEYORS
HONOLULU I WAILUKU I HILO, HAWAII

501 SUMNER STREET, SUITE 521
HONOLULU, HAWAII 96817

PHONE: 808-533-3646
FAX: 808-526-1267

STATE OF HAWAII
DEPARTMENT OF
HAWAIIAN HOME LANDS

PŪLEHUNUI
REGIONAL
INFRASTRUCTURE

AUSTIN, TSUTSUMI & ASSOC., INC.
ENGINEERS, SUVEYORS • HONOLULU, HAWAII

BRYAN H. KOBA
LICENSED PROFESSIONAL ENGINEER
No. 14948
HAWAII U.S.A.

This work was prepared by me or under my supervision and construction of this project will be under my observation. (Observation of construction as defined in Chapter 16-115 Subchapter 1 Definitions of the Hawaii Administrative Rules "Professional Engineers, Architects, Surveyors, and Landscape Architects.")

SIGNATURE — APRIL 30, 2020 EXP. DATE OF THE LICENSE

0 1 2
LINE IS 2 INCHES AT FULL SIZE
(IF NOT 2-inches : Scale Accordingly)

REVISION	DATE	BRIEF	BY

Project No:	16-576
Scale:	AS NOTED
Date:	1/31/2020
Designed By:	BHK
Drawn By:	BHK
Checked By:	

PLAN AND PROFILE
DHHL WATERLINE
STA. 37+00 TO 47+00

DWG. NO.

CA5-8

SHEET 64 OF 201

FILE	POCKET	FOLDER	NO.

JOB NO. 0-11-056.004
FN: Z:\2018\18-524 (16-576 PULEHUNUI NORTH SEWER_PHASE 6.3 WASTEWATER TREATMENT FACILITY) BRYAN\DWG\CA5-8 PP DHHL WATERLINE STA 37+00 TO 47+00.DWG

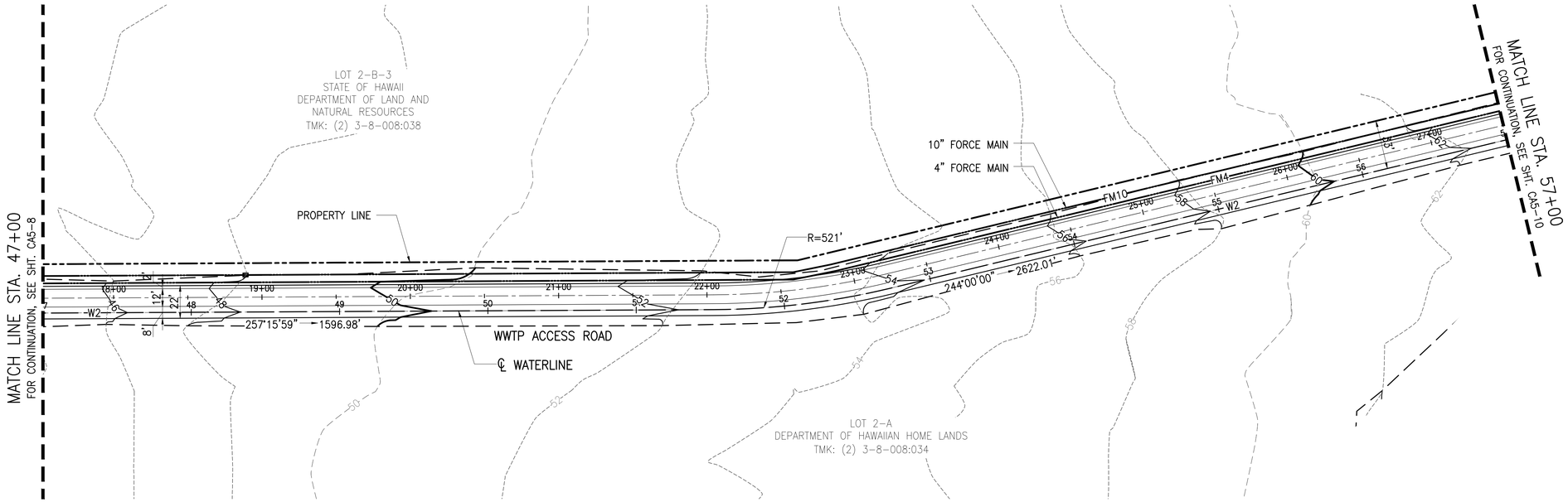

NORTH

PLAN – DHHL WATERLINE STA. 47+00 TO 57+00

SCALE: 1"=40'

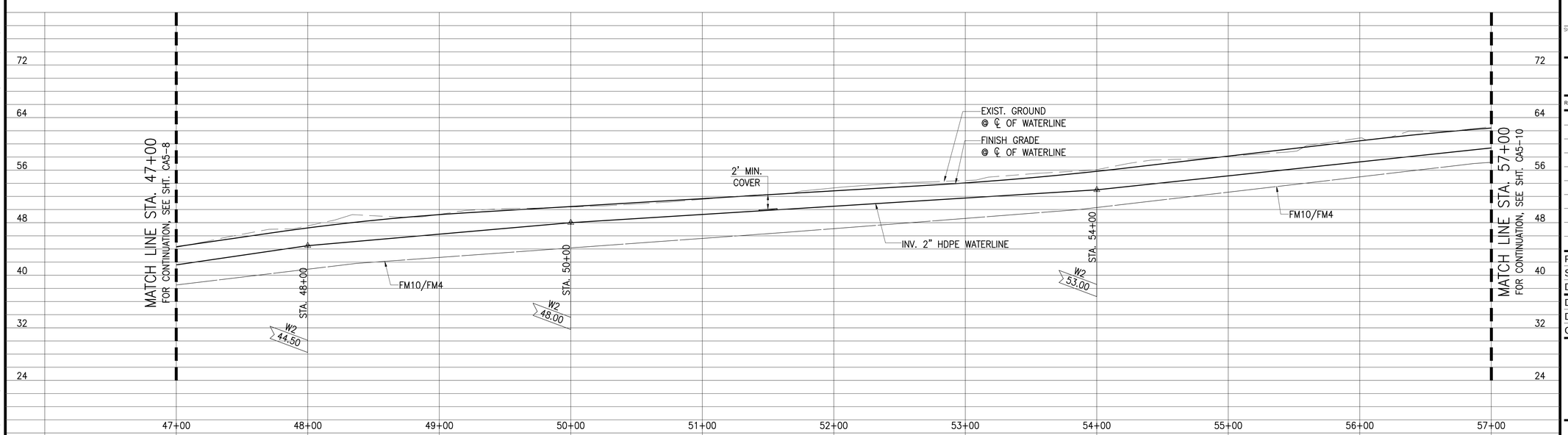

PROFILE – DHHL WATERLINE STA. 47+00 TO 57+00

SCALE: HORIZ: 1"=40'
VERT.: 1"=8'

AustinTsutsumi
& ASSOCIATES, INC.
CIVIL ENGINEERS I SURVEYORS
HONOLULU I WAILUKU I HILO, HAWAII

501 SUMNER STREET, SUITE 521
HONOLULU, HAWAII 96817

PHONE: 808-533-3646
FAX: 808-526-1267

STATE OF HAWAII
DEPARTMENT OF
HAWAIIAN HOME LANDS

PŪLEHUNUI
REGIONAL
INFRASTRUCTURE

AUSTIN, TSUTSUMI & ASSOC., INC.
ENGINEERS, SURVEYORS • HONOLULU, HAWAII

BRYAN H. KOBA
LICENSED PROFESSIONAL ENGINEER
No. 14948
HAWAII U.S.A.

This work was prepared by me or under my supervision and construction of this project will be under my observation. (Observation of construction as defined in Chapter 16-115 Subchapter 1 Definitions of the Hawaii Administrative Rules "Professional Engineers, Architects, Surveyors, and Landscape Architects.")

SIGNATURE — APRIL 30, 2020 EXP. DATE OF THE LICENSE

0 1 2
LINE IS 2 INCHES AT FULL SIZE
(If NOT 2-inches : Scale Accordingly)

REVISION	DATE	BRIEF	BY

Project No:	16-576
Scale:	AS NOTED
Date:	1/31/2020
Designed By:	BHK
Drawn By:	BHK
Checked By:	

PLAN AND PROFILE
DHHL WATERLINE
STA. 47+00 TO 57+00

DWG. NO.
CA5-9

SHEET 65 OF 201

FILE	POCKET	FOLDER	NO.

JOB NO. 0-11-056.004
FN: Z:\2018\18-524 (16-576 PULEHUNUI NORTH SEWER_PHASE 6.3 WASTEWATER TREATMENT FACILITY) BRYAN\DWG\CA5-9 PP DHHL WATERLINE STA 47+00 TO 57+00.DWG

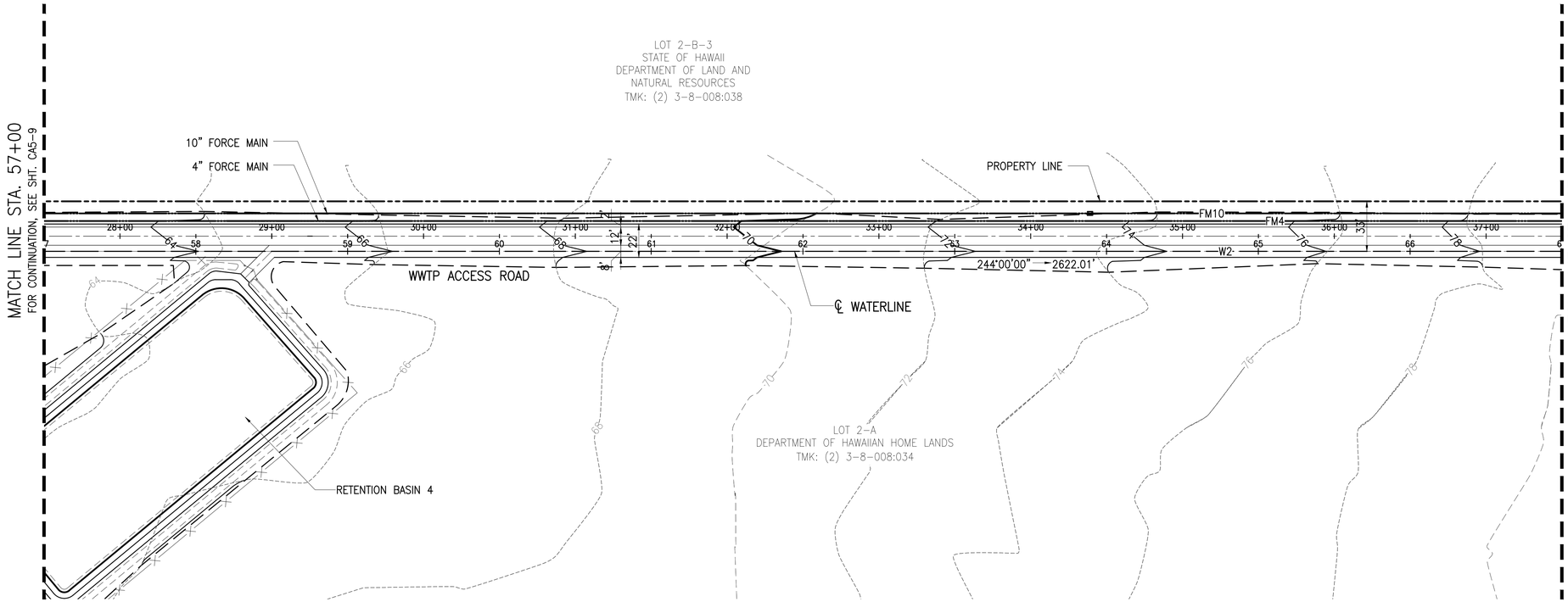

PLAN – DHHL WATERLINE STA. 57+00 TO 67+00

SCALE: 1"=40'

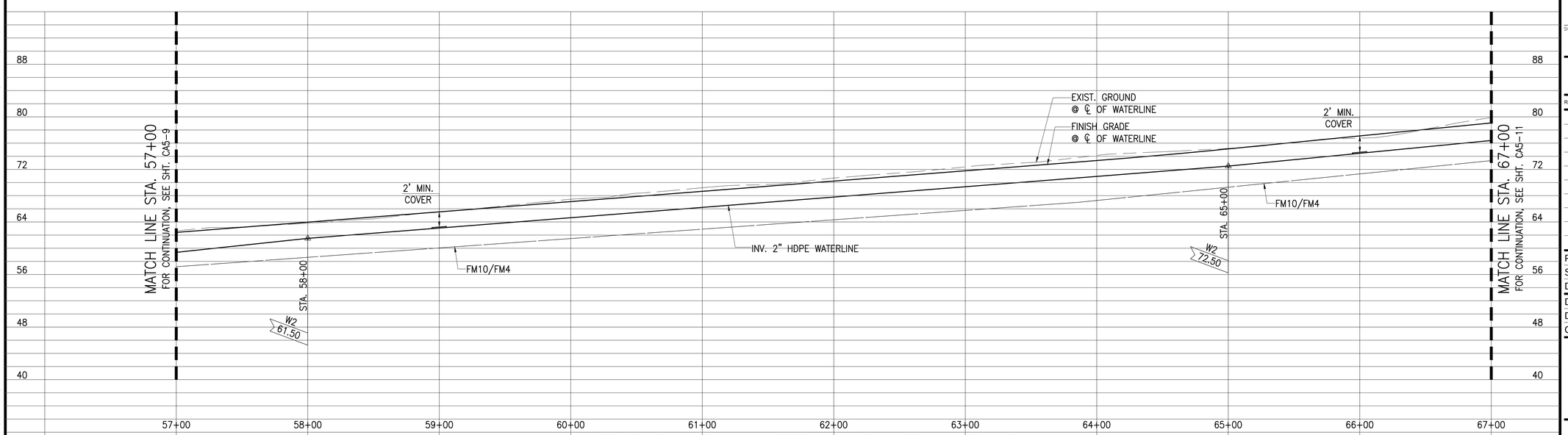

PROFILE – DHHL WATERLINE STA. 57+00 TO 67+00

SCALE: HORIZ: 1"=40'
VERT.: 1"=8'

AustinTsutsumi
& ASSOCIATES, INC.
CIVIL ENGINEERS I SURVEYORS
HONOLULU I WAILUKU I HILO, HAWAII

501 SUMNER STREET, SUITE 521
HONOLULU, HAWAII 96817

PHONE: 808-533-3646
FAX: 808-526-1267

STATE OF HAWAII
DEPARTMENT OF
HAWAIIAN HOME LANDS

PŪLEHUNUI
REGIONAL
INFRASTRUCTURE

AUSTIN, TSUTSUMI & ASSOC., INC.
ENGINEERS, SURVEYORS • HONOLULU, HAWAII

BRYAN H. KOBA
LICENSED PROFESSIONAL ENGINEER
No. 14948
HAWAII U.S.A.

This work was prepared by me or under my supervision and construction of this project will be under my observation. (Observation of construction as defined in Chapter 16-115 Subchapter 1 Definitions of the Hawaii Administrative Rules "Professional Engineers, Architects, Surveyors, and Landscape Architects.")

SIGNATURE — APRIL 30, 2020 EXP. DATE OF THE LICENSE

0 1 2
LINE IS 2 INCHES AT FULL SIZE
(If NOT 2-inches : Scale Accordingly)

REVISION	DATE	BRIEF	BY

Project No:	16-576
Scale:	AS NOTED
Date:	1/31/2020
Designed By:	BHK
Drawn By:	BHK
Checked By:	

PLAN AND PROFILE
DHHL WATERLINE
STA. 57+00 TO 67+00

DWG. NO.

CA5-10

SHEET 66 OF 201

FILE	POCKET	FOLDER	NO.

JOB NO. O-11-056.004
FN: Z:\2018\18-524 (16-576 PULEHUNUI NORTH SEWER_PHASE 6.3 WASTEWATER TREATMENT FACILITY) BRYAN\DWG\CA5-10 PP DHHL WATERLINE STA 57+00 TO 67+00.DWG

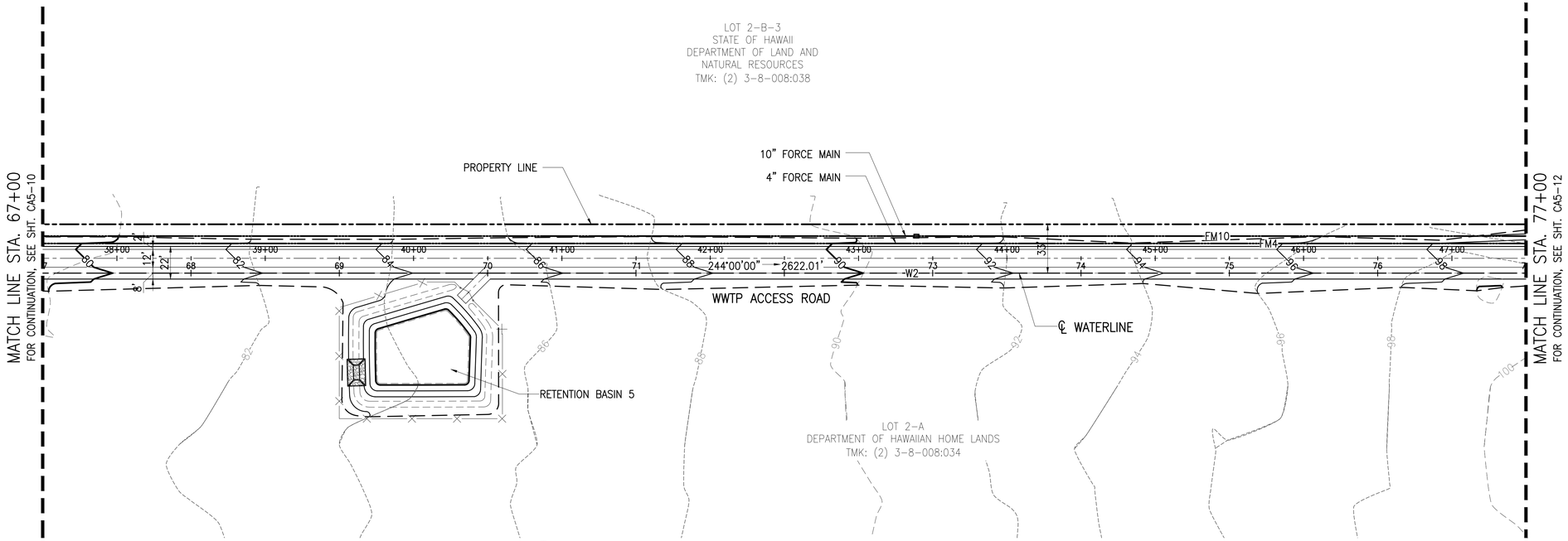

NORTH

PLAN – DHHL WATERLINE STA. 67+00 TO 77+00

SCALE: 1"=40'

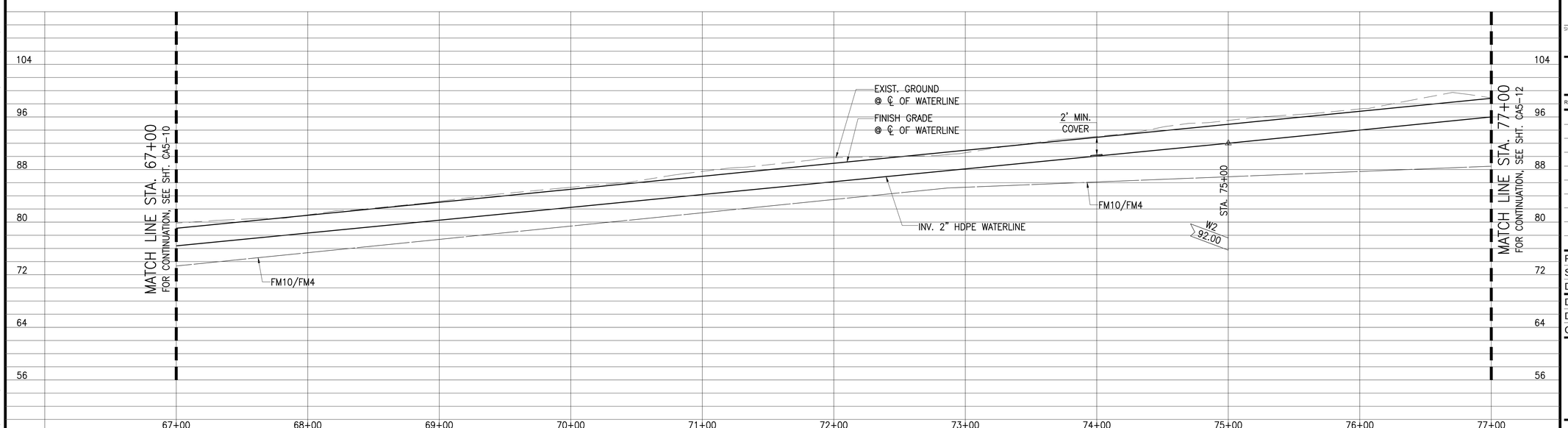

PROFILE – DHHL WATERLINE STA. 67+00 TO 77+00

SCALE: HORIZ: 1"=40'
VERT.: 1"=8'

AustinTsutsumi
& ASSOCIATES, INC.
CIVIL ENGINEERS I SURVEYORS
HONOLULU I WAILUKU I HILO, HAWAII

501 SUMNER STREET, SUITE 521
HONOLULU, HAWAII 96817

PHONE: 808-533-3646
FAX: 808-526-1267

STATE OF HAWAII
DEPARTMENT OF
HAWAIIAN HOME LANDS

PŪLEHUNUI
REGIONAL
INFRASTRUCTURE

AUSTIN, TSUTSUMI & ASSOC., INC.
ENGINEERS, SUVEYORS • HONOLULU, HAWAII

BRYAN H. KOBA
LICENSED PROFESSIONAL ENGINEER
No. 14948
HAWAII U.S.A.

This work was prepared by me or under my supervision and construction of this project will be under my observation. (Observation of construction as defined in Chapter 16-115 Subchapter 1 Definitions of the Hawaii Administrative Rules "Professional Engineers, Architects, Surveyors, and Landscape Architects.")

SIGNATURE — APRIL 30, 2020 EXP. DATE OF THE LICENSE

0 1 2
LINE IS 2 INCHES AT FULL SIZE
(if NOT 2-inches : Scale Accordingly)

REVISION	DATE	BRIEF	BY

Project No:	16-576
Scale:	AS NOTED
Date:	1/31/2020
Designed By:	BHK
Drawn By:	BHK
Checked By:	

PLAN AND PROFILE
DHHL WATERLINE
STA. 67+00 TO 77+00

DWG. NO.

CA5-11

SHEET 67 OF 201

FILE	POCKET	FOLDER	NO.

JOB NO. 0-11-056.004
FN: Z:\2018\18-524 (16-576 PULEHUNUI NORTH SEWER_PHASE 6.3 WASTEWATER TREATMENT FACILITY) BRYAN\DWG\CA5-11 PP DHHL WATERLINE STA 67+00 TO 77+00.DWG

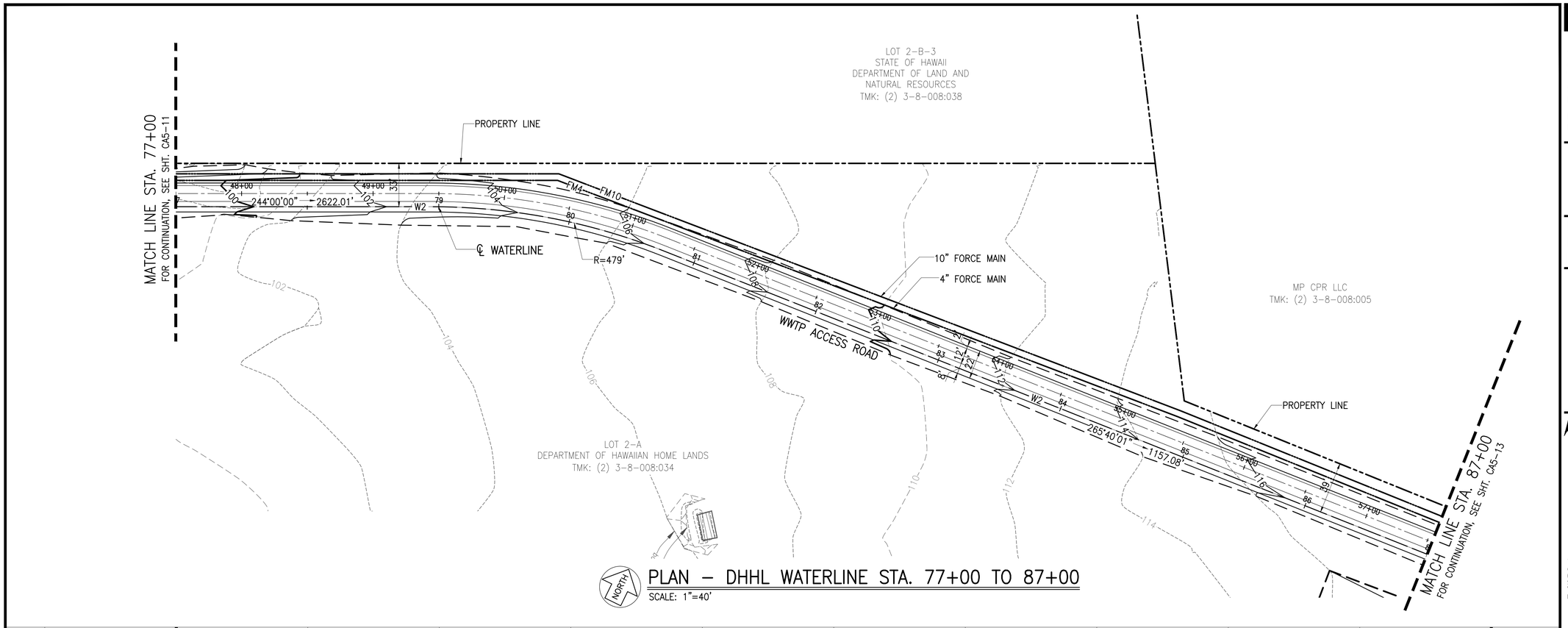

PLAN – DHHL WATERLINE STA. 77+00 TO 87+00

SCALE: 1"=40'

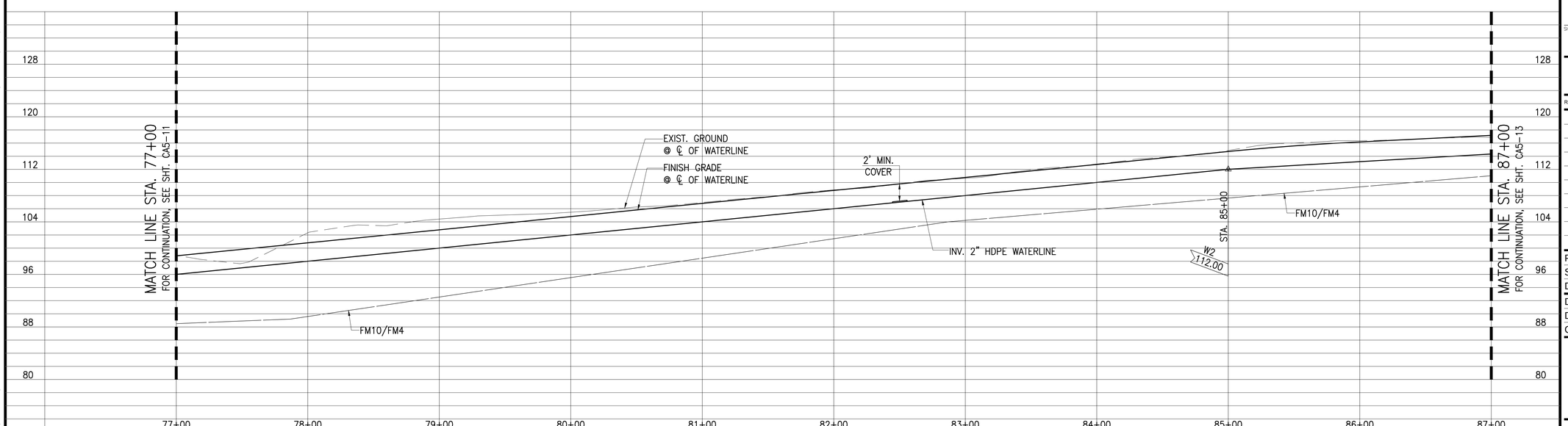

PROFILE – DHHL WATERLINE STA. 77+00 TO 87+00

SCALE: HORIZ: 1"=40'
VERT.: 1"=8'

AustinTsutsumi
& ASSOCIATES, INC.
CIVIL ENGINEERS I SURVEYORS
HONOLULU I WAILUKU I HILO, HAWAII

501 SUMNER STREET, SUITE 521
HONOLULU, HAWAII 96817

PHONE: 808-533-3646
FAX: 808-526-1267

STATE OF HAWAII
DEPARTMENT OF
HAWAIIAN HOME LANDS

PŪLEHUNUI
REGIONAL
INFRASTRUCTURE

AUSTIN, TSUTSUMI & ASSOC., INC.
ENGINEERS, SURVEYORS • HONOLULU, HAWAII

BRYAN H. KOBA
LICENSED PROFESSIONAL ENGINEER
No. 14948
HAWAII U.S.A.

This work was prepared by me or under my supervision and construction of this project will be under my observation. (Observation of construction as defined in Chapter 16-115 Subchapter 1 Definitions of the Hawaii Administrative Rules "Professional Engineers, Architects, Surveyors, and Landscape Architects.")

SIGNATURE — APRIL 30, 2020 EXP. DATE OF THE LICENSE

0 1 2
LINE IS 2 INCHES AT FULL SIZE
(If NOT 2-inches : Scale Accordingly)

REVISION	DATE	BRIEF	BY

Project No:	16-576
Scale:	AS NOTED
Date:	1/31/2020
Designed By:	BHK
Drawn By:	BHK
Checked By:	

PLAN AND PROFILE
DHHL WATERLINE
STA. 77+00 TO 87+00

DWG. NO.
CA5-12

SHEET 68 OF 201

FILE	POCKET	FOLDER	NO.

JOB NO. 0-11-056.004
FN: Z:\2018\18-524 (16-576 PULEHUNUI NORTH SEWER_PHASE 6.3 WASTEWATER TREATMENT FACILITY) BRYAN\DWG\CA5-12 PP DHHL WATERLINE STA 77+00 TO 87+00.DWG

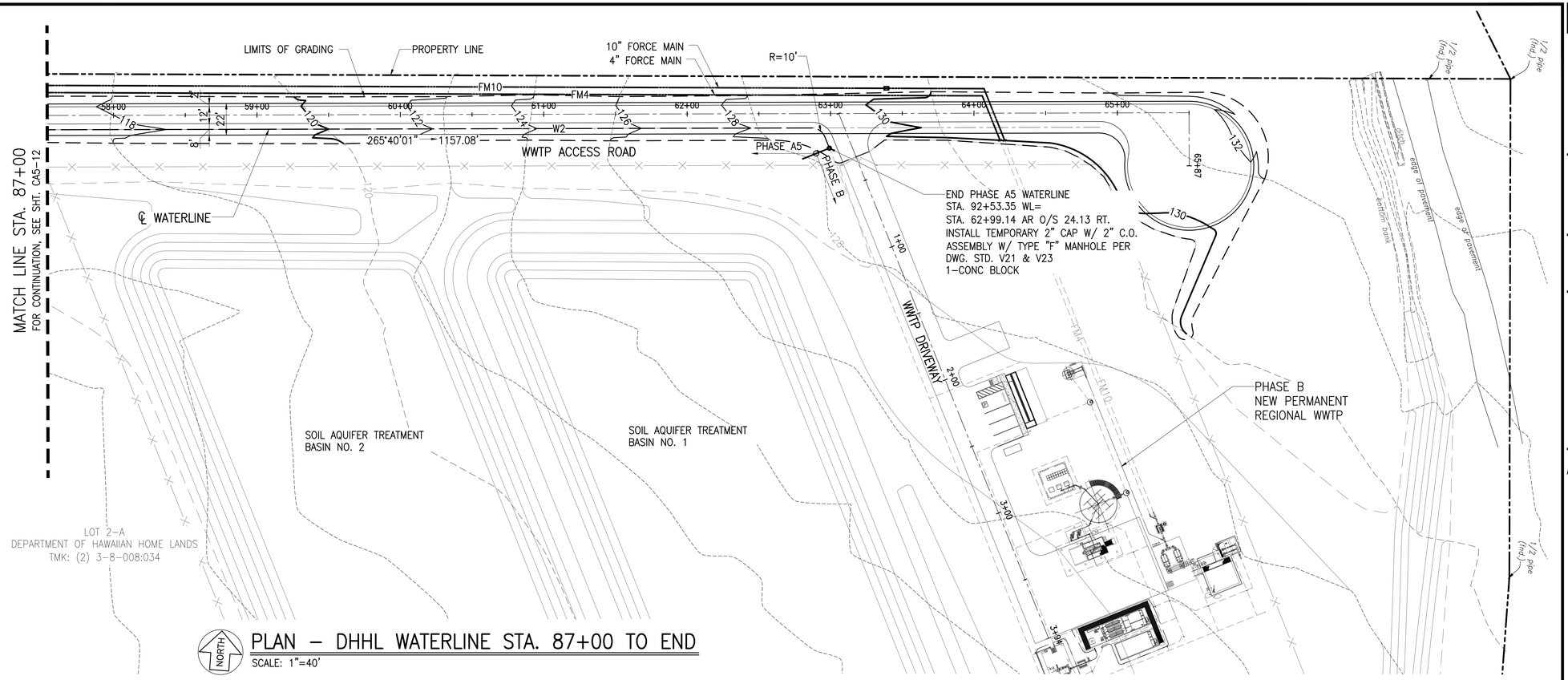

PLAN – DHHL WATERLINE STA. 87+00 TO END

SCALE: 1"=40'

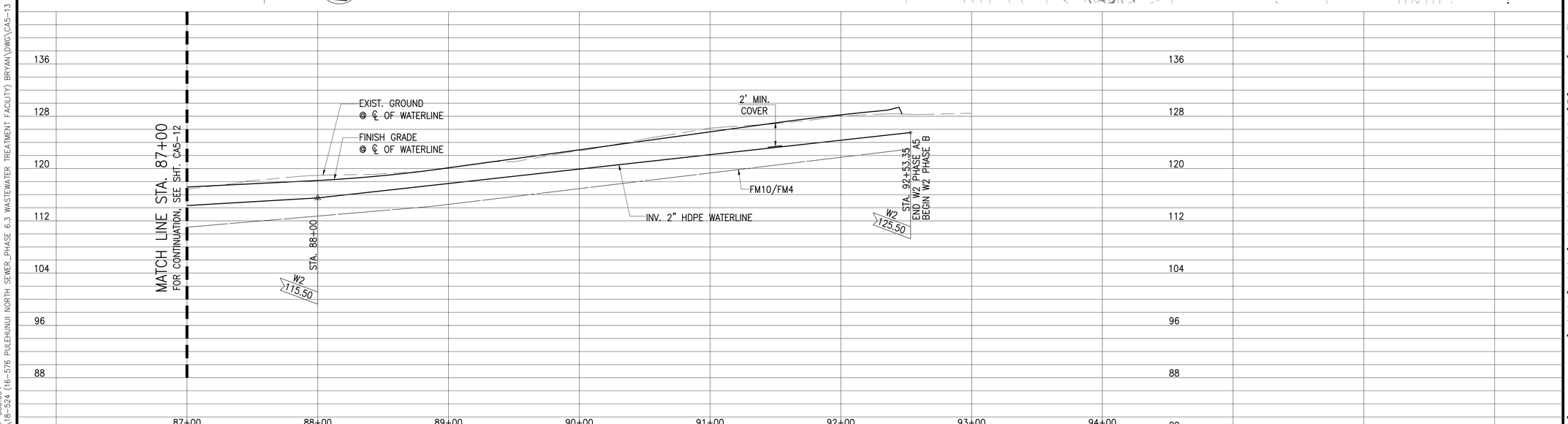

PROFILE – DHHL WATERLINE STA. 87+00 TO END

SCALE: HORIZ: 1"=40'
VERT.: 1"=8'

AustinTsutsumi
& ASSOCIATES, INC.
CIVIL ENGINEERS I SURVEYORS
HONOLULU I WAILUKU I HILO, HAWAII

501 SUMNER STREET, SUITE 521
HONOLULU, HAWAII 96817

PHONE: 808-533-3646
FAX: 808-526-1267

STATE OF HAWAII
DEPARTMENT OF
HAWAIIAN HOME LANDS

PŪLEHUNUI
REGIONAL
INFRASTRUCTURE

AUSTIN, TSUTSUMI & ASSOC., INC.
ENGINEERS, SURVEYORS • HONOLULU, HAWAII

BRYAN H. KOBA
LICENSED PROFESSIONAL ENGINEER
No. 14948
HAWAII U.S.A.

This work was prepared by me or under my supervision and construction of this project will be under my observation. (Observation of construction as defined in Chapter 16-115 Subchapter 1 Definitions of the Hawaii Administrative Rules "Professional Engineers, Architects, Surveyors, and Landscape Architects.")

SIGNATURE — APRIL 30, 2020 EXP. DATE OF THE LICENSE

0 1 2
LINE IS 2 INCHES AT FULL SIZE
(if NOT 2-inches : Scale Accordingly)

REVISION	DATE	BRIEF	BY

Project No:	16-576
Scale:	AS NOTED
Date:	1/31/2020
Designed By:	BHK
Drawn By:	BHK
Checked By:	

PLAN AND PROFILE
DHHL WATERLINE
STA. 87+00 TO END

DWG. NO.
CA5-13

SHEET 69 OF 201

FILE	POCKET	FOLDER	NO.

JOB NO. 0-11-056.004
FN: Z:\2018\18-524 (16-576 PULEHUNUI NORTH SEWER_PHASE 6.3 WASTEWATER TREATMENT FACILITY) BRYAN\DWG\CA5-13 PP DHHL WATERLINE STA 87+00 TO END.DWG

PROCESS AND INSTRUMENTATION DIAGRAM IDENTIFICATION LETTERS

	FIRST LETTER		SUCCEEDING LETTERS		
	MEASURED OR INITIATING VARIABLE	MODIFIER	READOUT OR PASSIVE FUNCTION	OUTPUT FUNCTION	MODIFIER
A	ANALYSIS		ALARM		
B	BURNER,COMBUSTION		USER'S CHOICE	USER'S CHOICE	USER'S CHOICE
C	USER'S CHOICE			CONTROL	
D	DENSITY	DIFFERENTIAL			
E	VOLTAGE		SENSOR(PRIMARY ELEMENT)		
F	FLOW RATE	RATIO(FRACTION)			
G	USER'S CHOICE		GLASS,VIEWIG DEVIDE		
H	HAND				HIGH
I	CURRENT(ELECTRICAL)		INDICATE		
J	POWER	SCAN			
K	TIME,TIME SCHEDULE	TIME RATE OF CHANGE		CONTROL STATION	
L	LEVEL		LIGHT		LOW
M	MOISTURE	MOMENTARY			MIDDLE,INTERMEDIATE
N	USER'S CHOICE		USER'S CHOICE	USER'S CHOICE	USER'S CHOICE
O	USER'S CHOICE		ORIFICE,RESTRICTION		
P	PRESSURE,VACUUM		POINT(TEST) CONNECTION		
Q	QUANTITY	INTEGRATE,TOTALIZE			
R	RADIATION		RECORD		
S	SPEED,FREQUENCY	SAFETY		SWITCH	
T	TEMPERATURE			TRANSMIT	
U	MULTIVARIABLE		MULTIFUNCTION	MULTIFUNCTION	MULTIFUNCTION
V	VIBRATION,MECANICAL ANALYSIS			VALVE,DAMPER,OR LOUVER	
W	WEIGHT,FORCE		WELL		
X	UNCLASSIFIED	X AXIS	UNCLASSIFIED	UNCLASSIFIED	UNCLASSIFIED
Y	EVENT,STATE,PRESENCE	Y AXIS		RELAY,COMPUTE,CONVERT	
Z	POSITION,DIMENSION	Z AXIS		DRIVER,ACTUATOR, UNCLASSIFIED,FINAL CONTROL ELEMENT	

LINES

	MAIN PROCESS FLOW (WITH TYPICAL DIRECTION OF SHOWN)
	MAIN (EXISTING)
	SECONDARY PROCESS FLOW
	SECONDARY (EXISTING)
	INSTRUMENT SUPPLY PROCESS TAPS,NON PROCESS FLOW
	PNEUMATIC SIGNAL
	ANALOG ELECTRIC SIGNAL
	DISCRETE ELECTRIC SIGNAL
	CAPILLARY TUBE OR FILLED SYSTEM
	ELECTROMAGNETIC OF SONIC SIGNAL (UNGUDED)
	SOFTWARE OR DATA LINK
	MECHANICAL
	HYDRAULIC
120V	POWER SUPPLY
SA	SERVICE AIR AUPPLY

VALVES

	GATE VALVES (2-WAY AND 3-WAY)
	GLOBAL VALVE (3-WAY AND 2-WAY)
	PLUG VALVE
	KNIFE GATE VALVE
	CHECK VALVE AND BALL CHECK VALVE
	DIAPHRAGM VALVE (PINCH VALVE)
	BUTTERFLY VALVE
	BALL VALVE (2-WAY AND 3-WAY)
	NEEDLE VALVE
	INSTERLOCK
	PRESSURE REDUCING REGULATING VALVE. SELF-CONTAINED
	BACK PRESSURE REGULATING VALVE. SELF-CONTAINED
S	SOLENOID VALVE
	PRESSURE SURGE DISCHARGE
	CONTROL VALVE
	TELESCOPING VALVE
NC	NORMALLY CLOSED
NUM	NORMALLY NUMBER

AustinTsutsumi & ASSOCIATES, INC.
CIVIL ENGINEERS I SURVEYORS
HONOLULU I WAILUKU I HILO, HAWAII

501 SUMNER STREET, SUITE 521
HONOLULU, HAWAII 96817

PHONE: 808-533-3646
FAX: 808-526-1267

STATE OF HAWAII
DEPARTMENT OF
HAWAIIAN HOME LANDS

PŪLEHUNUI
REGIONAL
INFRASTRUCTURE

AUSTIN, TSUTSUMI & ASSOC., INC.
ENGINEERS, SUVEYORS • HONOLULU, HAWAII

BRYAN H. KOBA
LICENSED PROFESSIONAL ENGINEER
No. 14948
HAWAII U.S.A.

This work was prepared by me or under my supervision and construction of this project will be under my observation. (Observation of construction as defined in Chapter 16-115 Subchapter 1 Definitions of the Hawaii Administrative Rules "Professional Engineers, Architects, Surveyors, and Landscape Architects.")

SIGNATURE — APRIL 30, 2020 EXP. DATE OF THE LICENSE

0 1 2
LINE IS 2 INCHES AT FULL SIZE
(If NOT 2-inches : Scale Accordingly)

REVISION	DATE	BRIEF	BY

Project No:	16-576
Scale:	AS NOTED
Date:	1/31/2020
Designed By:	BHK
Drawn By:	BHK
Checked By:	

LEGEND

DWG. NO.
GB-1

FILE	POCKET	FOLDER	NO.

JOB NO. O-11-056.004
FN: C:\PROJECT FOLDER\16-576 DHHL PROJECT\ENGINEERING\DWG\CONSTRUCTION DRAWING SET\GB-1 LEGEND.DWG

AustinTsutsumi
& ASSOCIATES, INC.
CIVIL ENGINEERS I SURVEYORS
HONOLULU I WAILUKU I HILO, HAWAII

501 SUMNER STREET, SUITE 521
HONOLULU, HAWAII 96817

PHONE: 808-533-3646
FAX: 808-526-1267

STATE OF HAWAII
DEPARTMENT OF
HAWAIIAN HOME LANDS

PŪLEHUNUI
REGIONAL
INFRASTRUCTURE

AUSTIN, TSUTSUMI & ASSOC., INC.
ENGINEERS, SUVEYORS • HONOLULU, HAWAII

BRYAN H. KOBA
LICENSED
PROFESSIONAL
ENGINEER
No. 14948
HAWAII U.S.A.

This work was prepared by me or under my supervision and construction of this project will be under my observation. (Observation of construction as defined in Chapter 16-115 Subchapter 1 Definitions of the Hawaii Administrative Rules "Professional Engineers, Architects, Surveyors, and Landscape Architects.")

SIGNATURE APRIL 30, 2020
EXP. DATE OF THE LICENSE

0 1 2
LINE IS 2 INCHES AT FULL SIZE
(If NOT 2-inches : Scale Accordingly)

REVISION	DATE	BRIEF	BY

Project No:	16-576
Scale:	AS NOTED
Date:	1/31/2020
Designed By:	BHK
Drawn By:	BHK
Checked By:	

DESIGN DATA

DWG. NO.

GB-2

SHEET 71 OF 201

FILE	POCKET	FOLDER	NO.

JOB NO. O-11-056.004
FN: Z:\2018\18-524 (16-576 PULEHUNUI NORTH SEWER_PHASE 6.3 WASTEWATER TREATMENT FACILITY) BRYAN\DWG\GB-2 DESIGN DATA.DWG

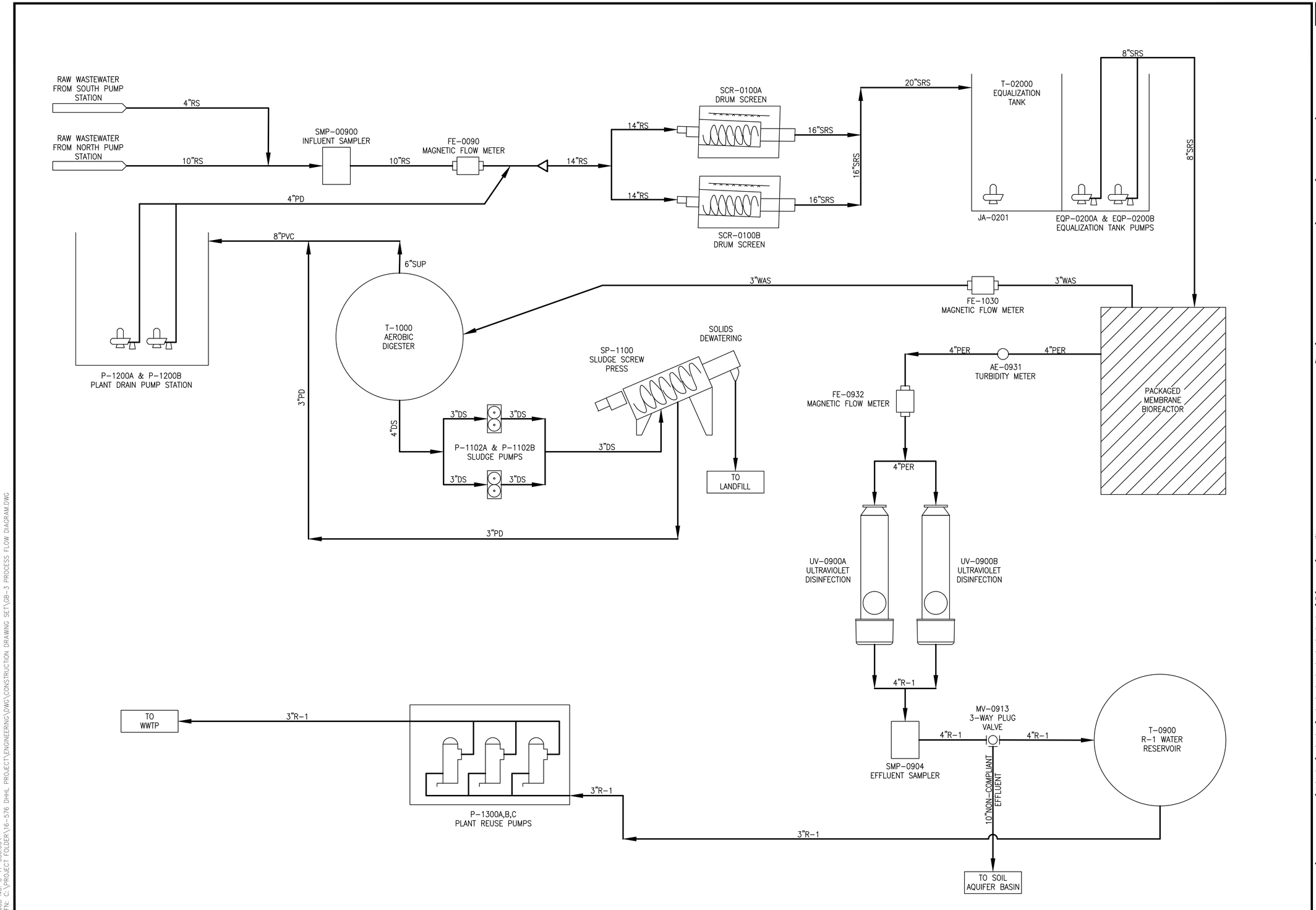

AustinTsutsumi & ASSOCIATES, INC.
CIVIL ENGINEERS I SURVEYORS
HONOLULU I WAILUKU I HILO, HAWAII

501 SUMNER STREET, SUITE 521
HONOLULU, HAWAII 96817

PHONE: 808-533-3646
FAX: 808-526-1267

STATE OF HAWAII
DEPARTMENT OF
HAWAIIAN HOME LANDS

PŪLEHUNUI
REGIONAL
INFRASTRUCTURE

AUSTIN, TSUTSUMI & ASSOC., INC.
ENGINEERS, SUVEYORS • HONOLULU, HAWAII

BRYAN H. KOBA
LICENSED PROFESSIONAL ENGINEER
No. 14948
HAWAII U.S.A.

This work was prepared by me or under my supervision and construction of this project will be under my observation. (Observation of construction as defined in Chapter 16-115 Subchapter 1 Definitions of the Hawaii Administrative Rules "Professional Engineers, Architects, Surveyors, and Landscape Architects.")

SIGNATURE — APRIL 30, 2020 EXP. DATE OF THE LICENSE

0 1 2
LINE IS 2 INCHES AT FULL SIZE
(If NOT 2-inches : Scale Accordingly)

REVISION	DATE	BRIEF	BY

Project No:	16-576
Scale:	AS NOTED
Date:	1/31/2020
Designed By:	BHK
Drawn By:	BHK
Checked By:	

PROCESS FLOW DIAGRAM

DWG. NO.
GB-3

SHEET 72 OF 201

FILE	POCKET	FOLDER	NO.

JOB NO. 0-11-056.004
FN: C:\PROJECT FOLDER\16-576 DHHL PROJECT\ENGINEERING\DWG\CONSTRUCTION DRAWING SET\GB-3 PROCESS FLOW DIAGRAM.DWG

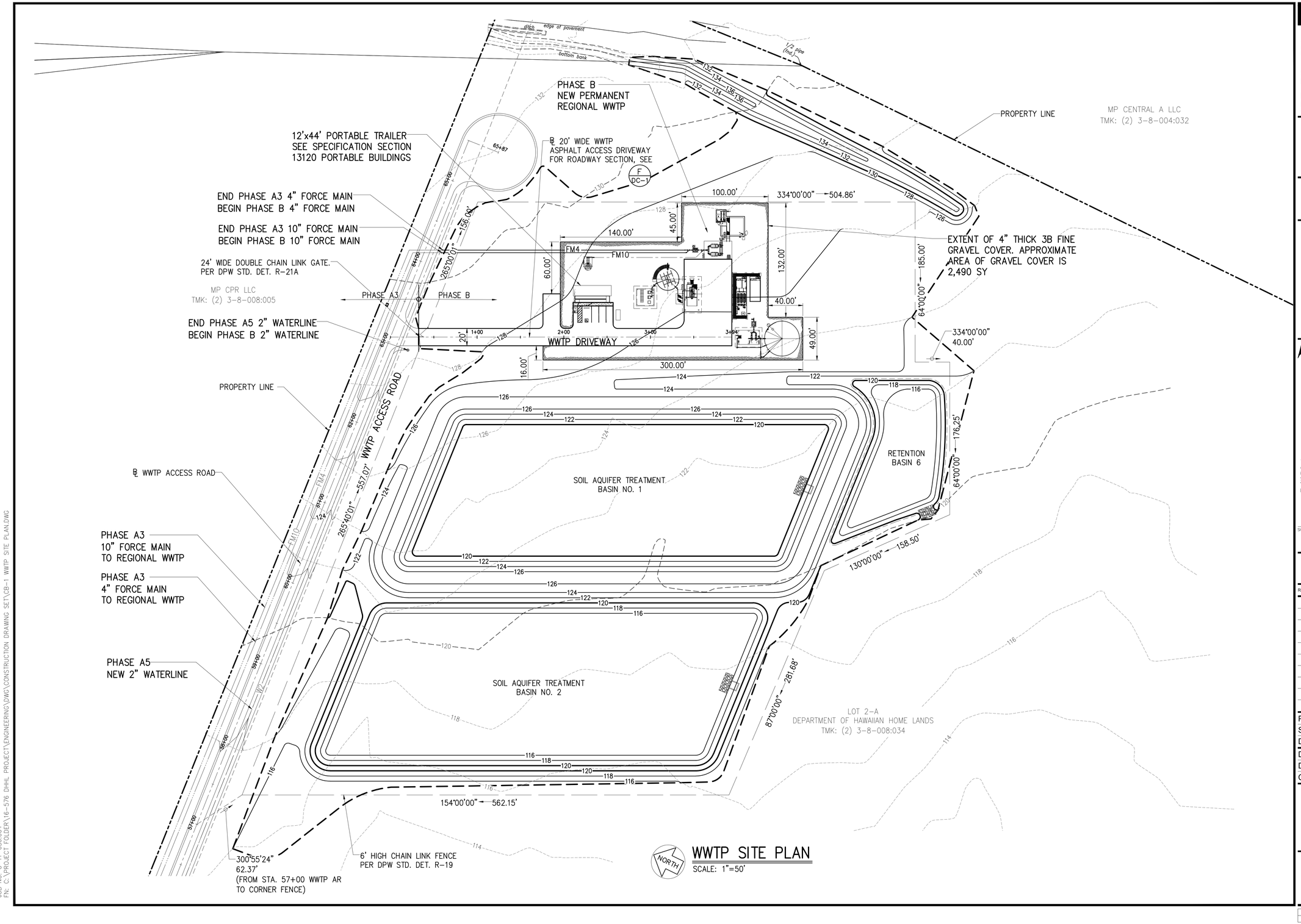

WWTP SITE PLAN

SCALE: 1"=50'

JOB NO. 0-11-056.004
FN: C:\PROJECT FOLDER\16-576 DHHL PROJECT\ENGINEERING\DWG\CONSTRUCTION DRAWING SET\CB-1 WWTP SITE PLAN.DWG

AustinTsutsumi
& ASSOCIATES, INC.
CIVIL ENGINEERS I SURVEYORS
HONOLULU I WAILUKU I HILO, HAWAII

501 SUMNER STREET, SUITE 521
HONOLULU, HAWAII 96817

PHONE: 808-533-3646
FAX: 808-526-1267

STATE OF HAWAII
DEPARTMENT OF
HAWAIIAN HOME LANDS

PŪLEHUNUI
REGIONAL
INFRASTRUCTURE

AUSTIN, TSUTSUMI & ASSOC., INC.
ENGINEERS, SUVEYORS • HONOLULU, HAWAII

BRYAN H. KOBA
LICENSED PROFESSIONAL ENGINEER
No. 14948
HAWAII U.S.A.

This work was prepared by me or under my supervision and construction of this project will be under my observation. (Observation of construction as defined in Chapter 16-115 Subchapter 1 Definitions of the Hawaii Administrative Rules "Professional Engineers, Architects, Surveyors, and Landscape Architects.")

SIGNATURE — APRIL 30, 2020 EXP. DATE OF THE LICENSE

0 1 2
LINE IS 2 INCHES AT FULL SIZE
(If NOT 2-inches : Scale Accordingly)

REVISION	DATE	BRIEF	BY

Project No:	16-576
Scale:	AS NOTED
Date:	1/31/2020
Designed By:	BHK
Drawn By:	BHK
Checked By:	

WWTP SITE PLAN

DWG. NO.

CB-1

SHEET 73 OF 201

FILE	POCKET	FOLDER	NO.

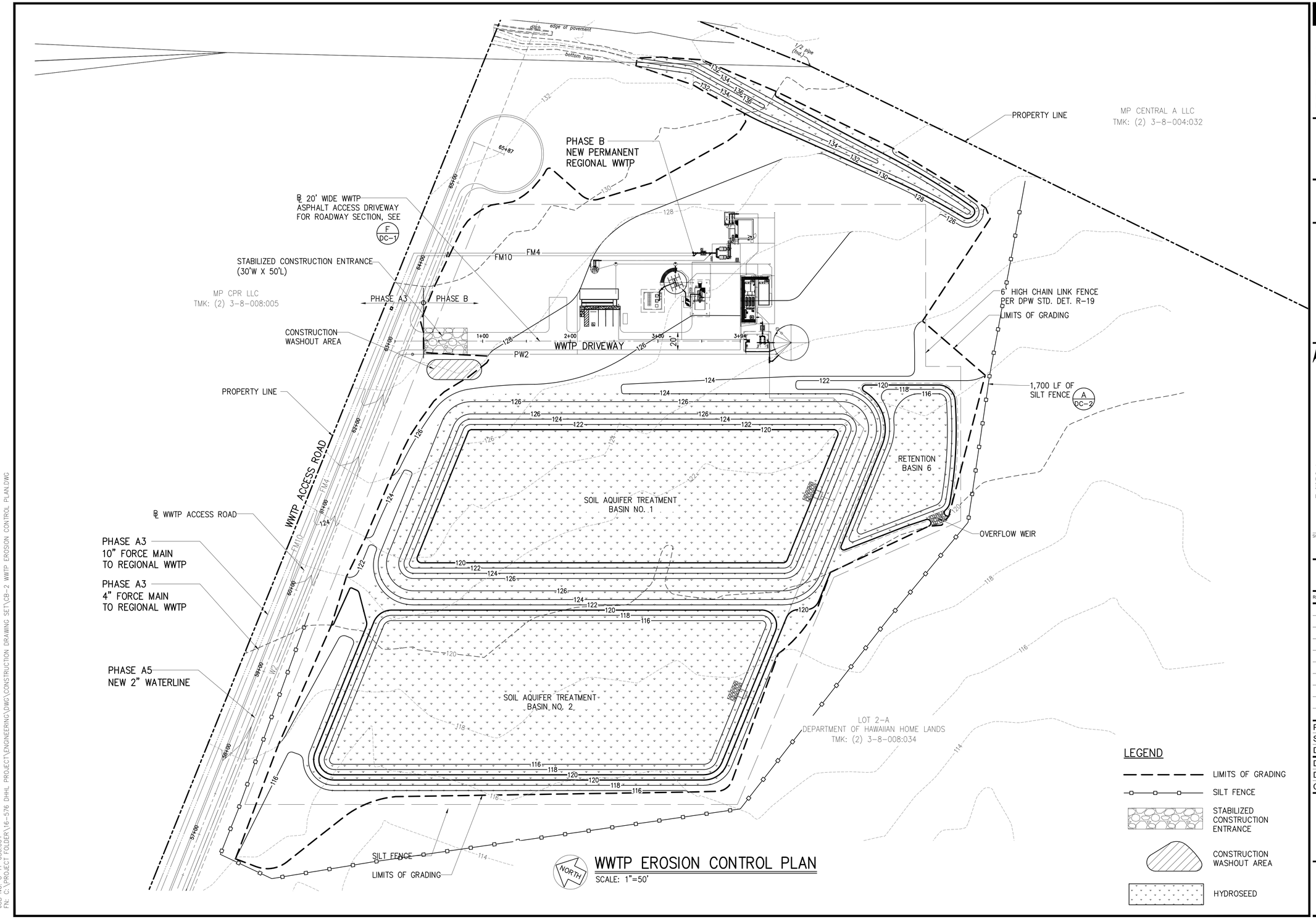

WWTP EROSION CONTROL PLAN

SCALE: 1"=50'

AustinTsutsumi
& ASSOCIATES, INC.
CIVIL ENGINEERS I SURVEYORS
HONOLULU I WAILUKU I HILO, HAWAII

501 SUMNER STREET, SUITE 521
HONOLULU, HAWAII 96817

PHONE: 808-533-3646
FAX: 808-526-1267

STATE OF HAWAII
DEPARTMENT OF
HAWAIIAN HOME LANDS

PŪLEHUNUI
REGIONAL
INFRASTRUCTURE

AUSTIN, TSUTSUMI & ASSOC., INC.
ENGINEERS, SUVEYORS • HONOLULU, HAWAII

BRYAN H. KOBA
LICENSED PROFESSIONAL ENGINEER
No. 14948
HAWAII U.S.A.

This work was prepared by me or under my supervision and construction of this project will be under my observation. (Observation of construction as defined in Chapter 16-115 Subchapter 1 Definitions of the Hawaii Administrative Rules "Professional Engineers, Architects, Surveyors, and Landscape Architects.")

SIGNATURE APRIL 30, 2020
EXP. DATE OF THE LICENSE

0 1 2
LINE IS 2 INCHES AT FULL SIZE
(If NOT 2-inches : Scale Accordingly)

REVISION	DATE	BRIEF	BY

Project No:	16-576
Scale:	AS NOTED
Date:	1/31/2020
Designed By:	BHK
Drawn By:	BHK
Checked By:	

WWTP EROSION CONTROL PLAN

DWG. NO.

CB-2

SHEET 74 OF 201

FILE	POCKET	FOLDER	NO.

JOB NO. O-11-056.004
FN: C:\PROJECT FOLDER\16-576 DHHL PROJECT\ENGINEERING\DWG\CONSTRUCTION DRAWING SET\CB-2 WWTP EROSION CONTROL PLAN.DWG

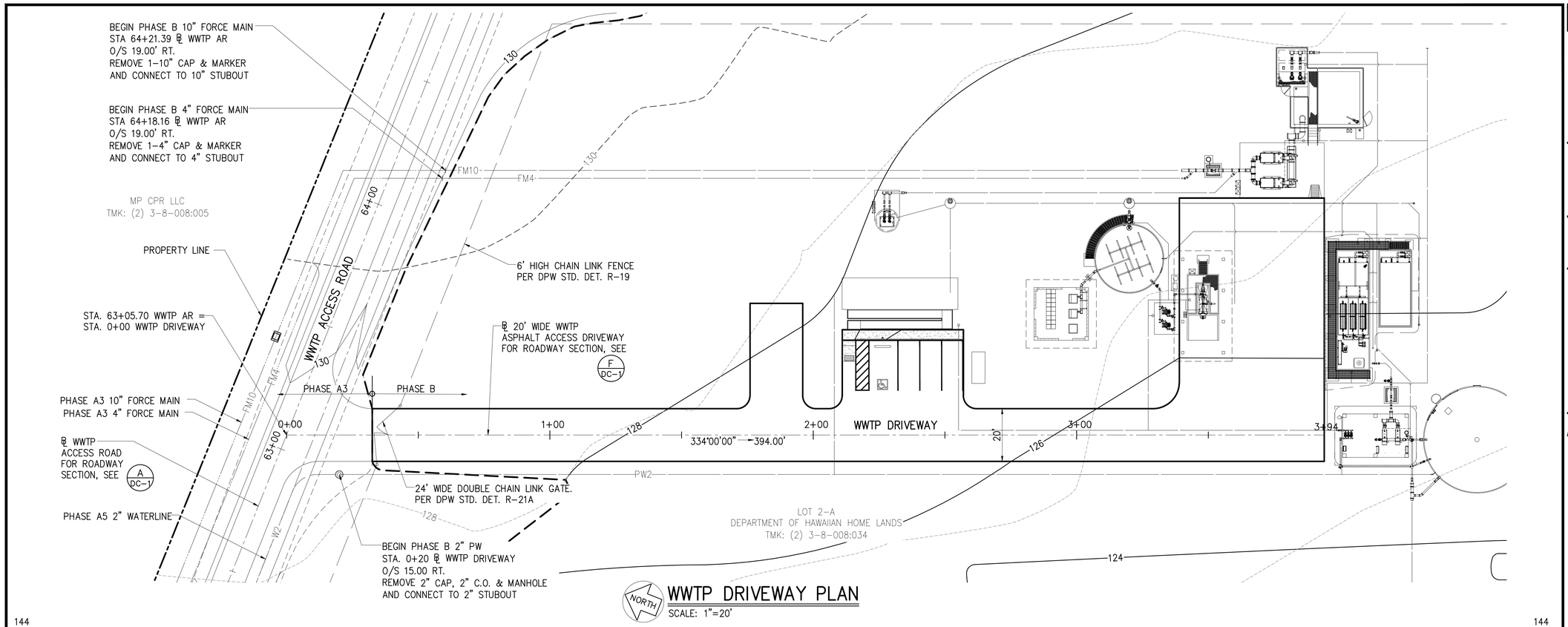

WWTP DRIVEWAY PLAN

SCALE: 1"=20'

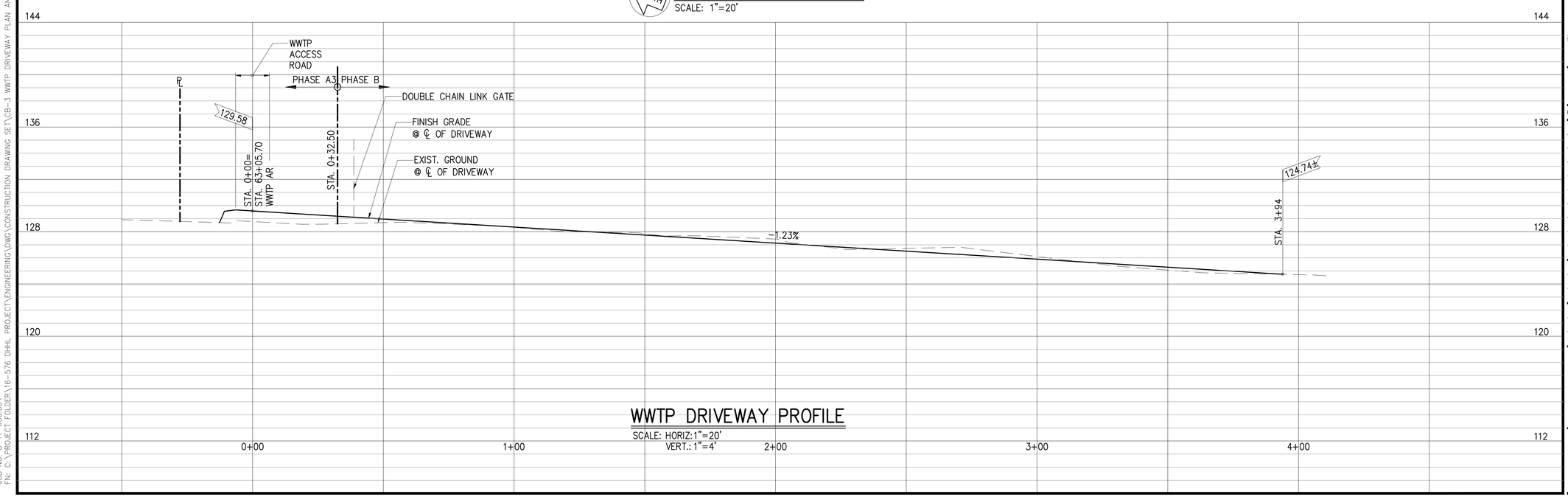

WWTP DRIVEWAY PROFILE

SCALE: HORIZ: 1"=20'
VERT.: 1"=4'

JOB NO. 0-11-056.004
FN: C:\PROJECT FOLDER\16-576 DHHL PROJECT\ENGINEERING\DWG\CONSTRUCTION DRAWING SET\CB-3 WWTP DRIVEWAY PLAN AND PROFILE.DWG

AustinTsutsumi
& ASSOCIATES, INC.
CIVIL ENGINEERS I SURVEYORS
HONOLULU I WAILUKU I HILO, HAWAII

501 SUMNER STREET, SUITE 521
HONOLULU, HAWAII 96817

PHONE: 808-533-3646
FAX: 808-526-1267

STATE OF HAWAII
DEPARTMENT OF
HAWAIIAN HOME LANDS

PŪLEHUNUI
REGIONAL
INFRASTRUCTURE

AUSTIN, TSUTSUMI & ASSOC., INC.
ENGINEERS, SUVEYORS • HONOLULU, HAWAII

BRYAN H. KOBA
LICENSED PROFESSIONAL ENGINEER
No. 14948
HAWAII U.S.A.

This work was prepared by me or under my supervision and construction of this project will be under my observation. (Observation of construction as defined in Chapter 16-115 Subchapter 1 Definitions of the Hawaii Administrative Rules "Professional Engineers, Architects, Surveyors, and Landscape Architects.")

SIGNATURE APRIL 30, 2020 EXP. DATE OF THE LICENSE

0 1 2
LINE IS 2 INCHES AT FULL SIZE
(If NOT 2-inches : Scale Accordingly)

REVISION	DATE	BRIEF	BY

Project No:	16-576
Scale:	AS NOTED
Date:	1/31/2020
Designed By:	BHK
Drawn By:	BHK
Checked By:	

WWTP DRIVEWAY PLAN AND PROFILE

DWG. NO.

CB-3

SHEET 75 OF 201

FILE	POCKET	FOLDER	NO.

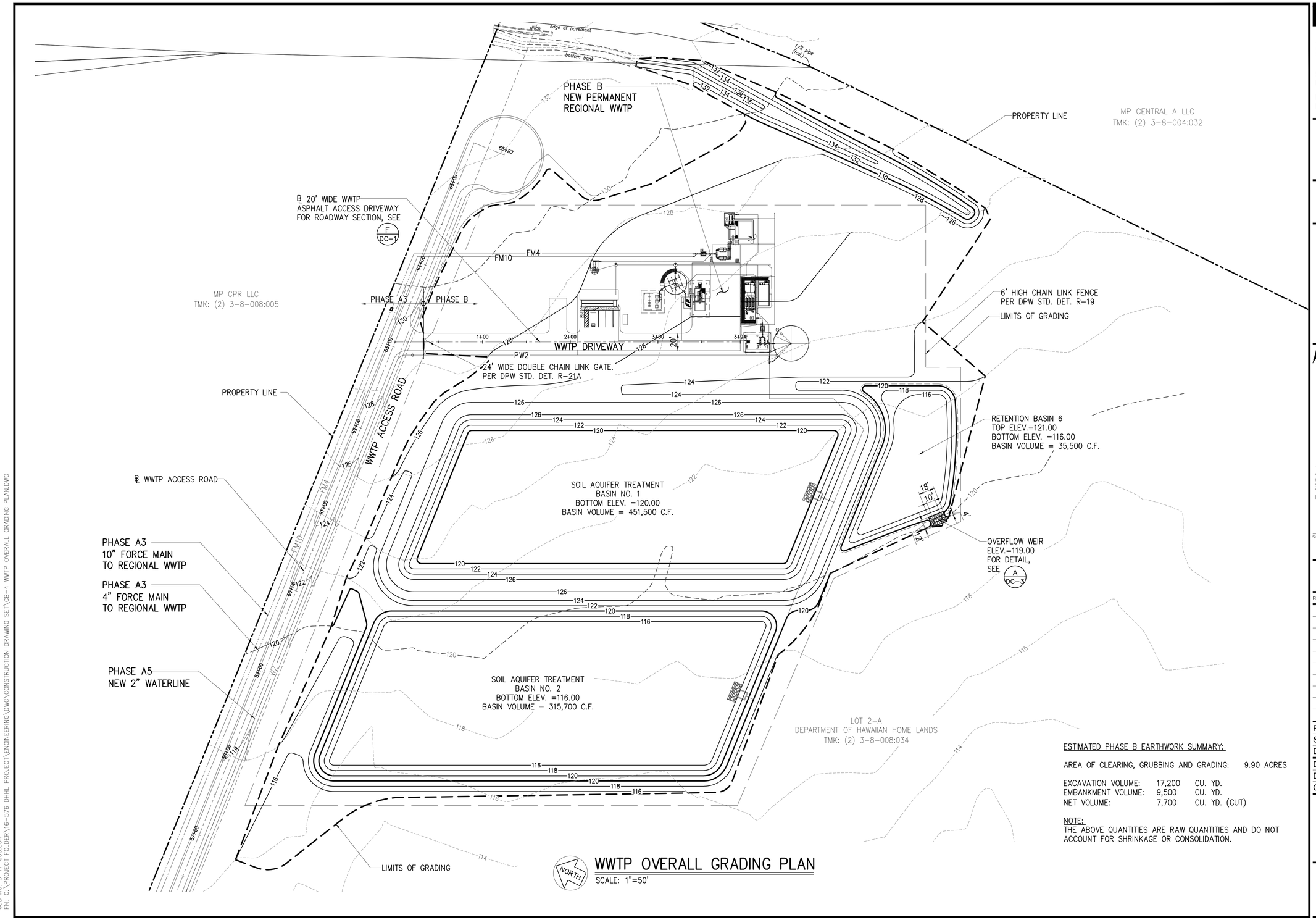

WWTP OVERALL GRADING PLAN

SCALE: 1"=50'

ESTIMATED PHASE B EARTHWORK SUMMARY:

AREA OF CLEARING, GRUBBING AND GRADING: 9.90 ACRES

EXCAVATION VOLUME:	17,200	CU. YD.
EMBANKMENT VOLUME:	9,500	CU. YD.
NET VOLUME:	7,700	CU. YD. (CUT)

NOTE:
THE ABOVE QUANTITIES ARE RAW QUANTITIES AND DO NOT ACCOUNT FOR SHRINKAGE OR CONSOLIDATION.

AustinTsutsumi & ASSOCIATES, INC.
CIVIL ENGINEERS I SURVEYORS
HONOLULU I WAILUKU I HILO, HAWAII
501 SUMNER STREET, SUITE 521
HONOLULU, HAWAII 96817
PHONE: 808-533-3646
FAX: 808-526-1267

STATE OF HAWAII
DEPARTMENT OF
HAWAIIAN HOME LANDS

PŪLEHUNUI
REGIONAL
INFRASTRUCTURE

AUSTIN, TSUTSUMI & ASSOC., INC.
ENGINEERS, SUVEYORS • HONOLULU, HAWAII

BRYAN H. KOBA
LICENSED PROFESSIONAL ENGINEER
No. 14948
HAWAII U.S.A.

This work was prepared by me or under my supervision and construction of this project will be under my observation. (Observation of construction as defined in Chapter 16-115 Subchapter 1 Definitions of the Hawaii Administrative Rules "Professional Engineers, Architects, Surveyors, and Landscape Architects.")

SIGNATURE — APRIL 30, 2020 EXP. DATE OF THE LICENSE

0 1 2
LINE IS 2 INCHES AT FULL SIZE
(If NOT 2-inches : Scale Accordingly)

REVISION	DATE	BRIEF	BY

Project No:	16-576
Scale:	AS NOTED
Date:	1/31/2020
Designed By:	BHK
Drawn By:	BHK
Checked By:	

WWTP OVERALL GRADING PLAN

DWG. NO.
CB-4

SHEET 76 OF 201

FILE	POCKET	FOLDER	NO.

JOB NO. 0-11-056.004
FN: C:\PROJECT FOLDER\16-576 DHHL PROJECT\ENGINEERING\DWG\CONSTRUCTION DRAWING SET\CB-4 WWTP OVERALL GRADING PLAN.DWG

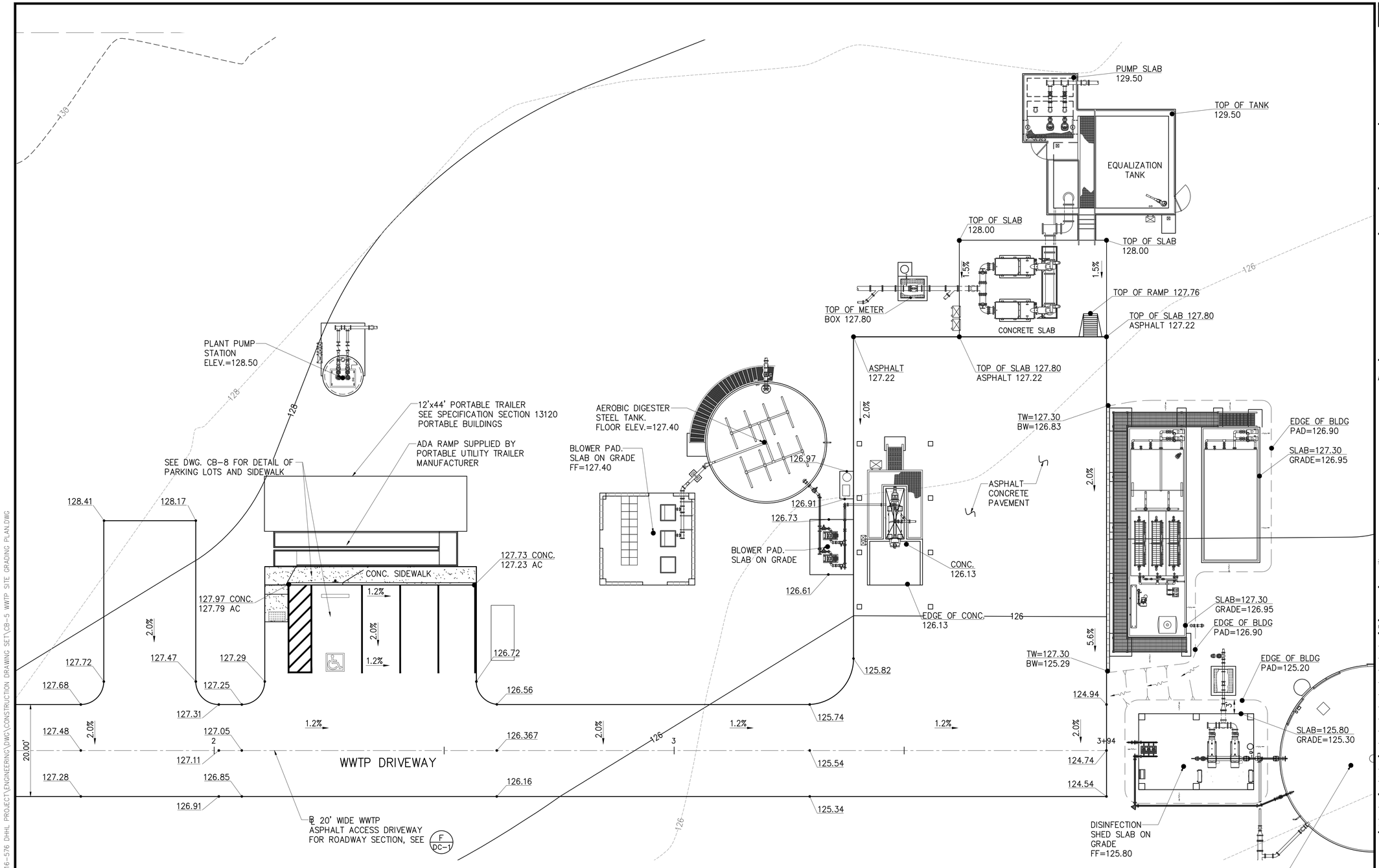

WWTP SITE GRADING PLAN

SCALE: 1"=10'

AustinTsutsumi
& ASSOCIATES, INC.
CIVIL ENGINEERS I SURVEYORS
HONOLULU I WAILUKU I HILO, HAWAII

501 SUMNER STREET, SUITE 521
HONOLULU, HAWAII 96817

PHONE: 808-533-3646
FAX: 808-526-1267

STATE OF HAWAII
DEPARTMENT OF
HAWAIIAN HOME LANDS

PŪLEHUNUI
REGIONAL
INFRASTRUCTURE

AUSTIN, TSUTSUMI & ASSOC., INC.
ENGINEERS, SUVEYORS • HONOLULU, HAWAII

BRYAN H. KOBA
LICENSED PROFESSIONAL ENGINEER
No. 14948
HAWAII U.S.A.

This work was prepared by me or under my supervision and construction of this project will be under my observation. (Observation of construction as defined in Chapter 16-115 Subchapter 1 Definitions of the Hawaii Administrative Rules "Professional Engineers, Architects, Surveyors, and Landscape Architects.")

SIGNATURE — APRIL 30, 2020 — EXP. DATE OF THE LICENSE

0 1 2
LINE IS 2 INCHES AT FULL SIZE
(If NOT 2-inches : Scale Accordingly)

REVISION	DATE	BRIEF	BY

Project No:	16-576
Scale:	AS NOTED
Date:	1/31/2020
Designed By:	BHK
Drawn By:	BHK
Checked By:	

WWTP SITE GRADING PLAN

DWG. NO.

CB-5

SHEET 77 OF 201

FILE	POCKET	FOLDER	NO.

JOB NO. 0-11-056.004
FN: C:\PROJECT FOLDER\16-576 DHHL PROJECT\ENGINEERING\DWG\CONSTRUCTION DRAWING SET\CB-5 WWTP SITE GRADING PLAN.DWG

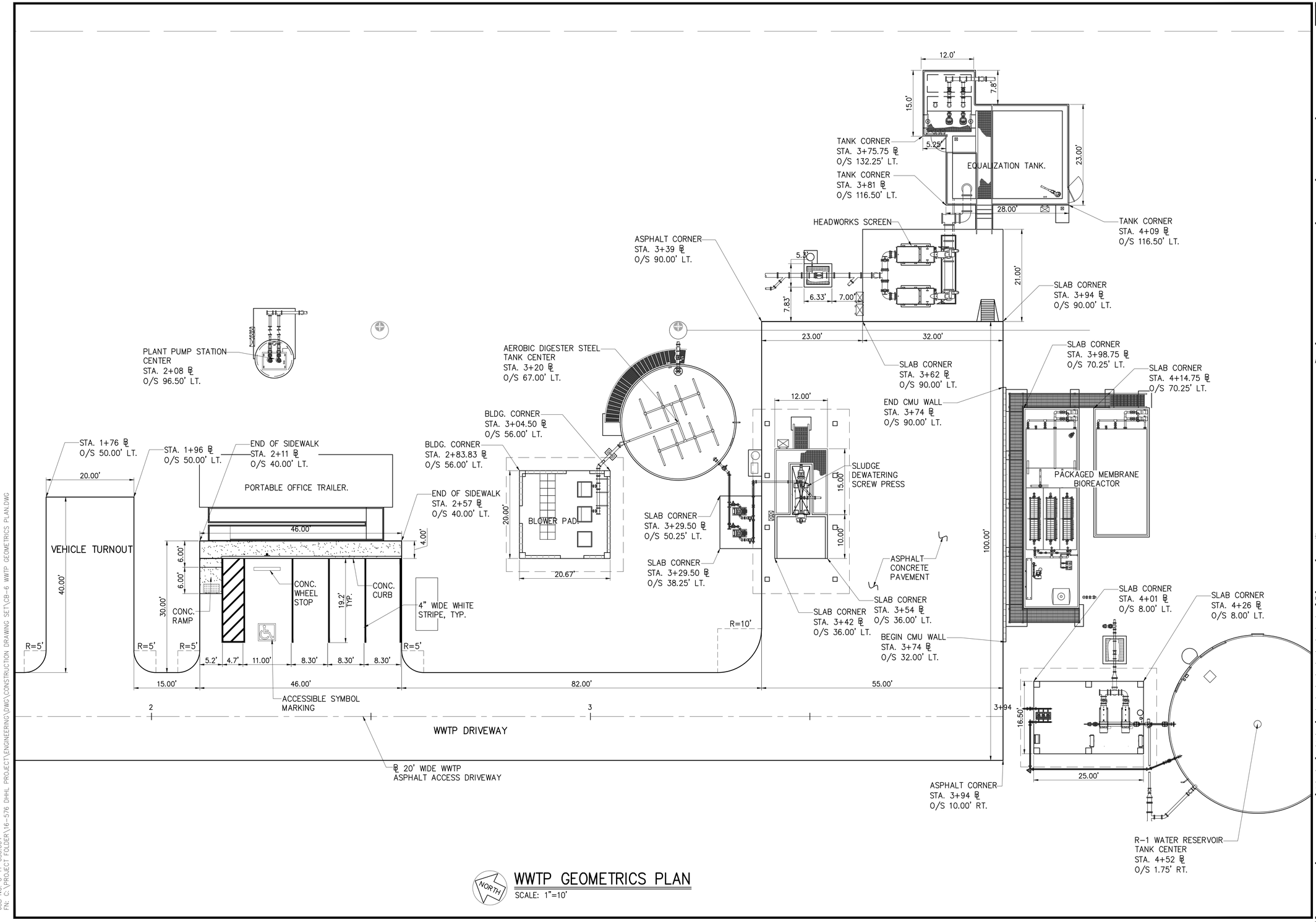

WWTP GEOMETRICS PLAN

SCALE: 1"=10'

JOB NO. 0-11-056.004
FN: C:\PROJECT FOLDER\16-576 DHHL PROJECT\ENGINEERING\DWG\CONSTRUCTION DRAWING SET\CB-6 WWTP GEOMETRICS PLAN.DWG

AustinTsutsumi
& ASSOCIATES, INC.
CIVIL ENGINEERS I SURVEYORS
HONOLULU I WAILUKU I HILO, HAWAII

501 SUMNER STREET, SUITE 521
HONOLULU, HAWAII 96817

PHONE: 808-533-3646
FAX: 808-526-1267

STATE OF HAWAII
DEPARTMENT OF
HAWAIIAN HOME LANDS

PŪLEHUNUI
REGIONAL
INFRASTRUCTURE

AUSTIN, TSUTSUMI & ASSOC., INC.
ENGINEERS, SURVEYORS • HONOLULU, HAWAII

BRYAN H. KOBA
LICENSED PROFESSIONAL ENGINEER
No. 14948
HAWAII U.S.A.

This work was prepared by me or under my supervision and construction of this project will be under my observation. (Observation of construction as defined in Chapter 16-115 Subchapter 1 Definitions of the Hawaii Administrative Rules "Professional Engineers, Architects, Surveyors, and Landscape Architects.")

SIGNATURE APRIL 30, 2020
EXP. DATE OF THE LICENSE

0 1 2
LINE IS 2 INCHES AT FULL SIZE
(If NOT 2-inches : Scale Accordingly)

REVISION	DATE	BRIEF	BY

Project No:	16-576
Scale:	AS NOTED
Date:	1/31/2020
Designed By:	BHK
Drawn By:	BHK
Checked By:	

WWTP GEOMETRICS PLAN

DWG. NO.

CB-6

SHEET 78 OF 201

FILE	POCKET	FOLDER	NO.

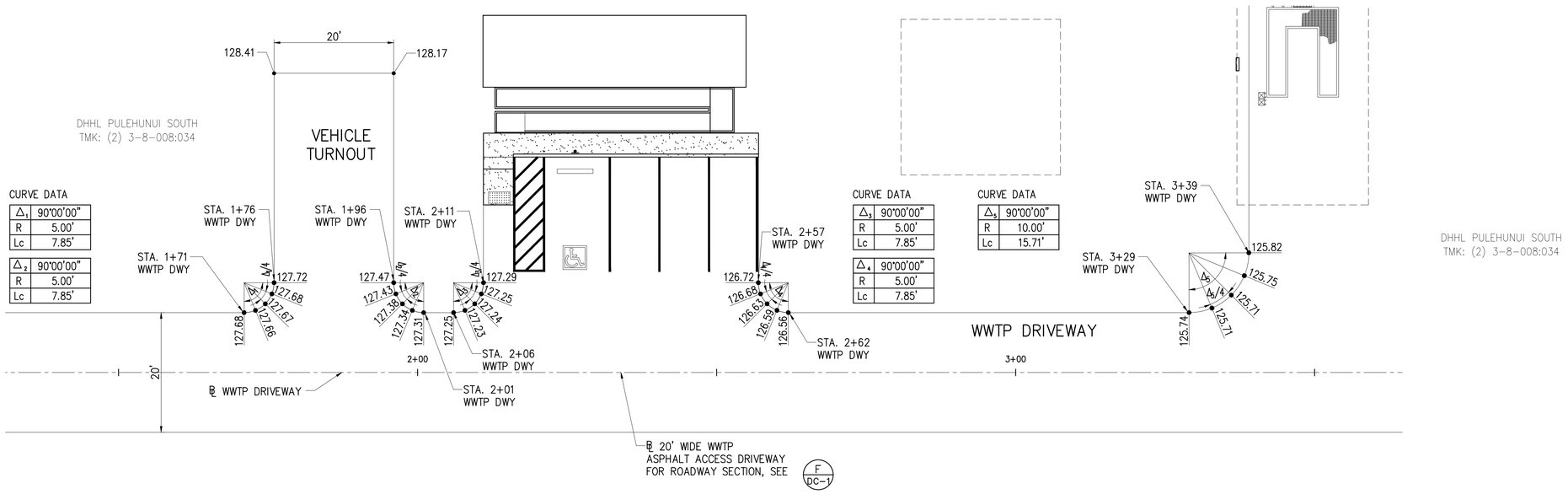

PHASE B – CURVE RETURN ON WWTP DRIVEWAY

SCALE: 1"=10'

AustinTsutsumi
& ASSOCIATES, INC.
CIVIL ENGINEERS I SURVEYORS
HONOLULU I WAILUKU I HILO, HAWAII

501 SUMNER STREET, SUITE 521
HONOLULU, HAWAII 96817

PHONE: 808-533-3646
FAX: 808-526-1267

STATE OF HAWAII
DEPARTMENT OF
HAWAIIAN HOME LANDS

PŪLEHUNUI
REGIONAL
INFRASTRUCTURE

AUSTIN, TSUTSUMI & ASSOC., INC.
ENGINEERS, SUVEYORS • HONOLULU, HAWAII

BRYAN H. KOBA
LICENSED
PROFESSIONAL
ENGINEER
No. 14948
HAWAII U.S.A.

This work was prepared by me or under my supervision and construction of this project will be under my observation. (Observation of construction as defined in Chapter 16-115 Subchapter 1 Definitions of the Hawaii Administrative Rules "Professional Engineers, Architects, Surveyors, and Landscape Architects.")

SIGNATURE — APRIL 30, 2020 EXP. DATE OF THE LICENSE

0 1 2
LINE IS 2 INCHES AT FULL SIZE
(If NOT 2-inches : Scale Accordingly)

REVISION	DATE	BRIEF	BY

Project No:	16-576
Scale:	AS NOTED
Date:	1/31/2020
Designed By:	BHK
Drawn By:	BHK
Checked By:	

CURVE RETURN DETAILS

DWG. NO.

CB-7

SHEET 79 OF 201

FILE	POCKET	FOLDER	NO.

JOB NO. O-11-056.004
FN: C:\PROJECT FOLDER\16-576 DHHL PROJECT\ENGINEERING\DWG\CONSTRUCTION DRAWING SET\CB-7 CURVE RETURN DETAILS.DWG

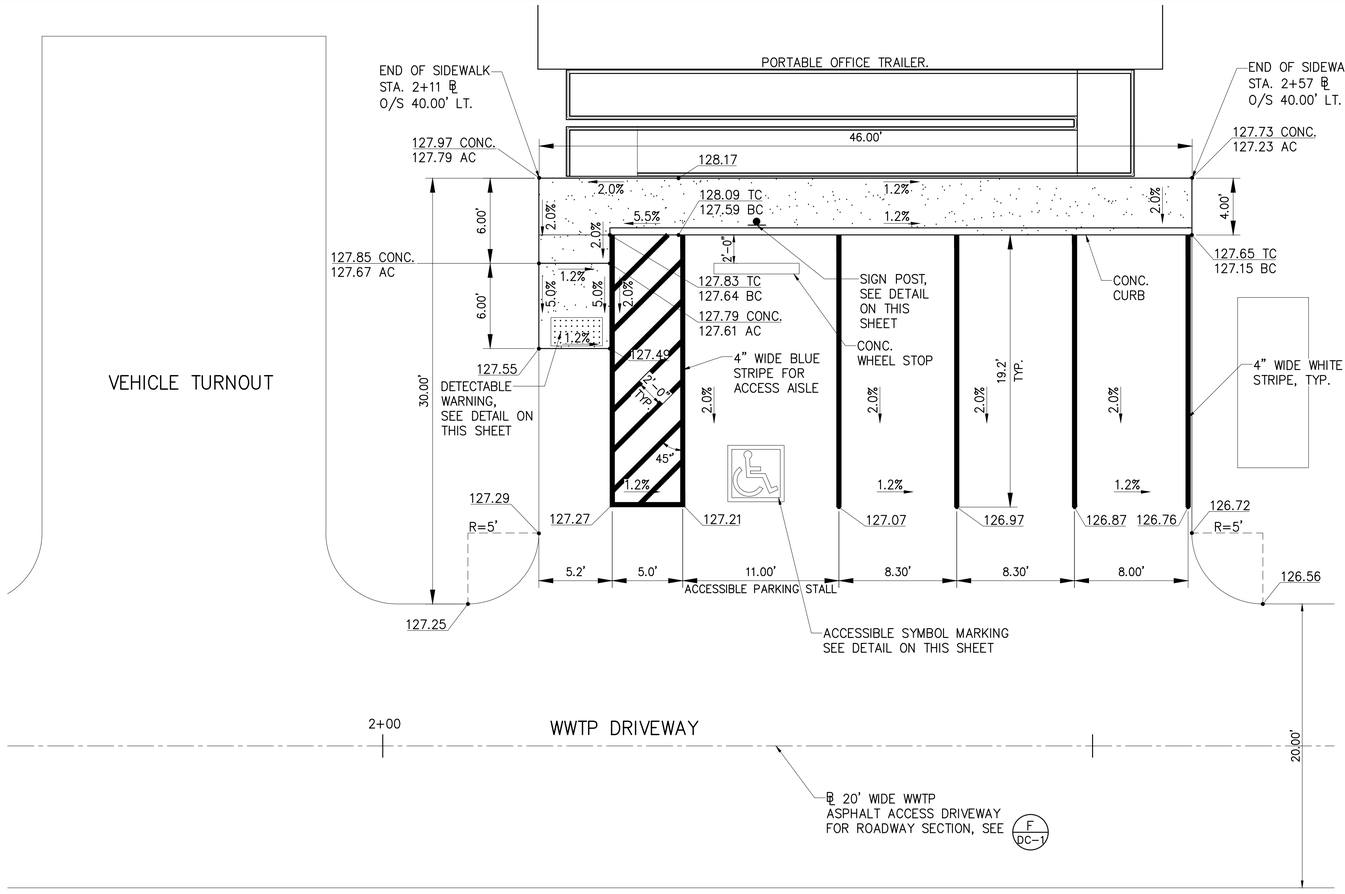

WWTP CURB RAMP DETAILS

SCALE: 1"=5'

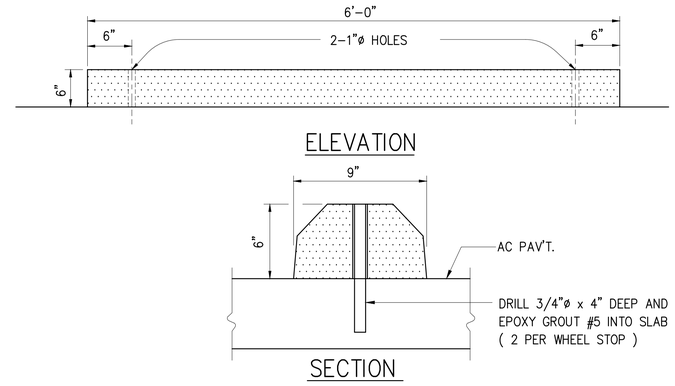

CONC. WHEEL STOP DETAIL

NOT TO SCALE

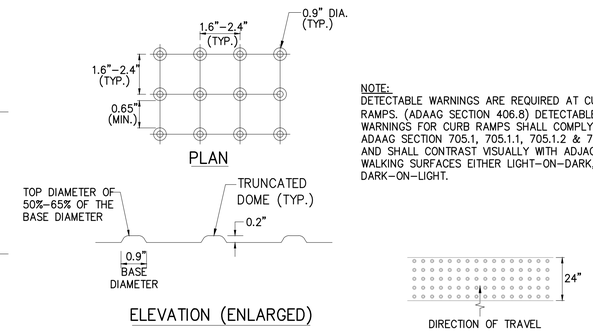

NOTE:
DETECTABLE WARNINGS ARE REQUIRED AT CURB RAMPS. (ADAAG SECTION 406.8) DETECTABLE WARNINGS FOR CURB RAMPS SHALL COMPLY TO ADAAG SECTION 705.1, 705.1.1, 705.1.2 & 705.1.3 AND SHALL CONTRAST VISUALLY WITH ADJACENT WALKING SURFACES EITHER LIGHT-ON-DARK, OR DARK-ON-LIGHT.

DETECTABLE WARNING TRUNCATED DOMES DETAIL

NOT TO SCALE

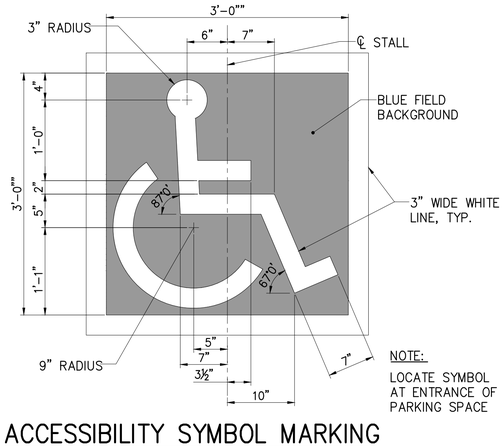

NOTE:
LOCATE SYMBOL AT ENTRANCE OF PARKING SPACE

ACCESSIBILITY SYMBOL MARKING

NOT TO SCALE

NOTES:

1. SIGN SHALL BE ALUM T6061 SHEET COVERED WITH ENGINEERING GRADE REFLECTIVE SHEETING.
2. SIGN LETTERING SHALL BE UPPERCASE LETTERS OF THE TYPE APPROVED BY THE FEDERAL HIGHWAY ADMINISTRATION.
3. ELEMENTS (TEXT AND GRAPHIC) REQUIRED ON SIGN MAY BE PLACED ON MORE THAN ONE SIGN. DIMENSIONS OF ELEMENTS ON SIGN ARE MINIMUM REQUIREMENTS.

ACCESSIBLE PARKING SPACE SIGNS

NOT TO SCALE

NOTES:

1. ALL SIGNS SHALL COMPLY WITH U.S. DEPARTMENT OF TRANSPORTATION, FEDERAL HIGHWAY ADMINISTRATION'S "MANUAL OF UNIFORM TRAFFIC CONTROL DEVICES", LOCAL CODES AND AS SPECIFIED. MOUNT SIGNS TO POST IN ACCORDANCE WITH MANUFACTURER'S INSTRUCTIONS.
2. FOR SIGNS IN UNPAVED AREAS, PROVIDE 2 1/4"x2 1/4"x2'-0" SQUARE TUBE SIGN POST ANCHOR. POST ANCHOR TO BE CENTERED AND EMBEDDED IN A 1'-6" DIAMETER, 2'-0" DEEP CONCRETE FOOTING.
3. BOLT POST TUBE TO POST ANCHOR IN ACCORDANCE TO MANUFACTURER'S INSTRUCTIONS.

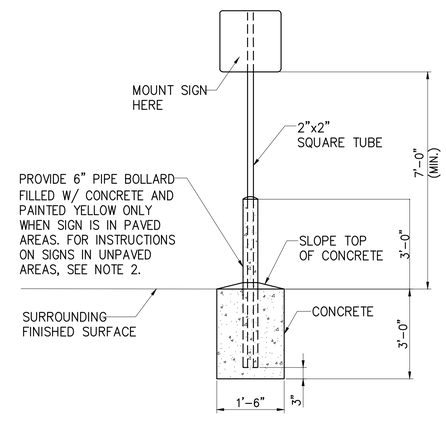

SIGN POST DETAIL

NOT TO SCALE

AustinTsutsumi & ASSOCIATES, INC.
CIVIL ENGINEERS I SURVEYORS
HONOLULU I WAILUKU I HILO, HAWAII
501 SUMNER STREET, SUITE 521
HONOLULU, HAWAII 96817
PHONE: 808-533-3646
FAX: 808-526-1267

STATE OF HAWAII
DEPARTMENT OF
HAWAIIAN HOME LANDS

PŪLEHUNUI
REGIONAL
INFRASTRUCTURE

AUSTIN, TSUTSUMI & ASSOC., INC.
ENGINEERS, SURVEYORS • HONOLULU, HAWAII

BRYAN H. KOBA
LICENSED PROFESSIONAL ENGINEER
No. 14948
HAWAII U.S.A.

This work was prepared by me or under my supervision and construction of this project will be under my observation. (Observation of construction as defined in Chapter 16-115 Subchapter 1 Definitions of the Hawaii Administrative Rules "Professional Engineers, Architects, Surveyors, and Landscape Architects.")

SIGNATURE APRIL 30, 2020
EXP. DATE OF THE LICENSE

0 1 2
LINE IS 2 INCHES AT FULL SIZE
(If NOT 2-inches : Scale Accordingly)

REVISION	DATE	BRIEF	BY

Project No:	16-576
Scale:	AS NOTED
Date:	1/31/2020
Designed By:	BHK
Drawn By:	BHK
Checked By:	

WWTP CURB RAMP DETAILS

DWG. NO.
CB-8

FILE	POCKET	FOLDER	NO.

JOB NO. 0-11-056.004
FN: C:\PROJECT FOLDER\16-576 DHHL PROJECT\ENGINEERING\DWG\CONSTRUCTION DRAWING SET\CB-8 WWTP CURB RAMP DETAILS.DWG

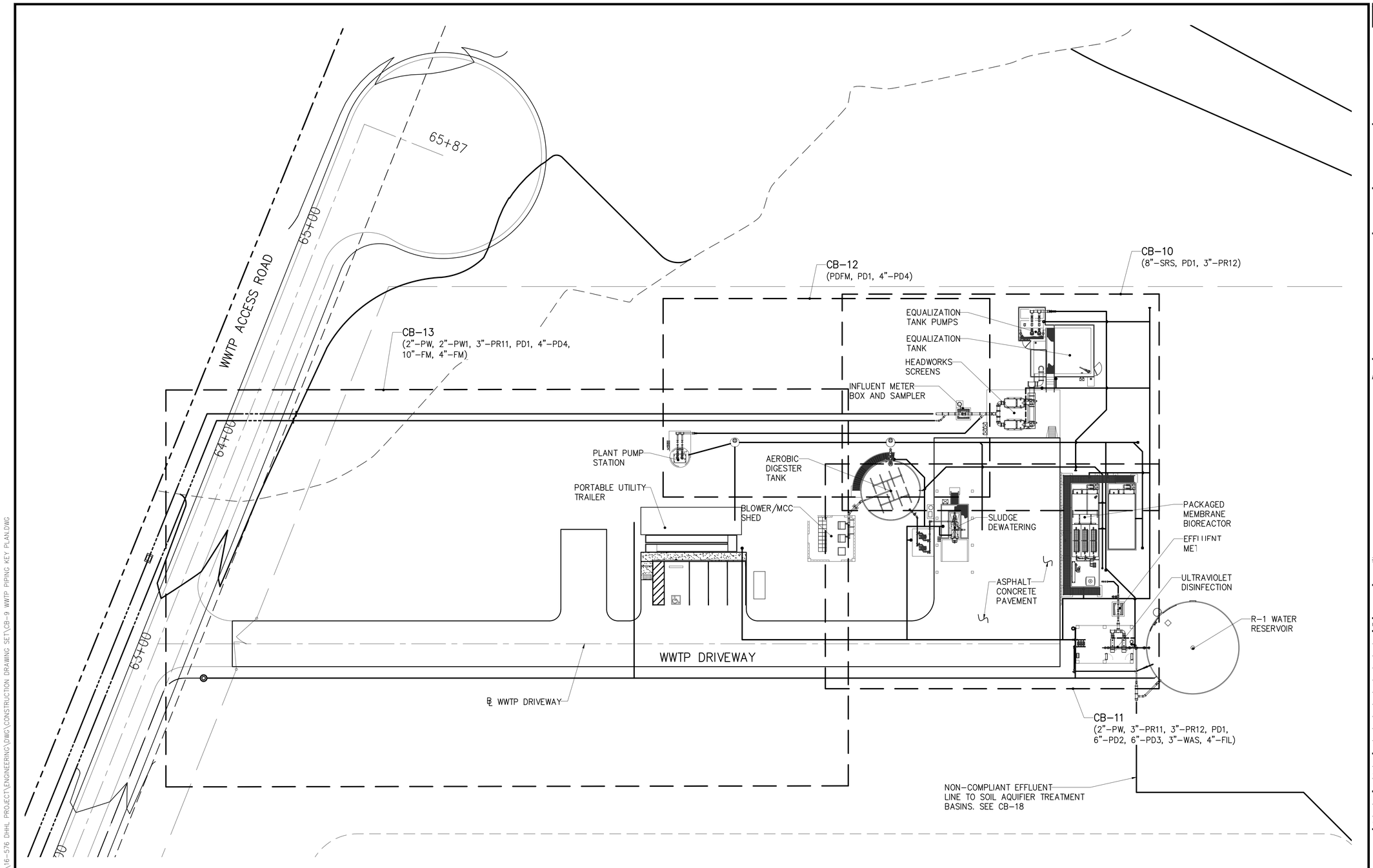

WWTP PIPING KEY PLAN

SCALE: 1"=10'

JOB NO. 0-11-056.004
FN: C:\PROJECT FOLDER\16-576 DHHL PROJECT\ENGINEERING\DWG\CONSTRUCTION DRAWING SET\CB-9 WWTP PIPING KEY PLAN.DWG

AustinTsutsumi
& ASSOCIATES, INC.
CIVIL ENGINEERS I SURVEYORS
HONOLULU I WAILUKU I HILO, HAWAII

501 SUMNER STREET, SUITE 521
HONOLULU, HAWAII 96817

PHONE: 808-533-3646
FAX: 808-526-1267

STATE OF HAWAII
DEPARTMENT OF
HAWAIIAN HOME LANDS

PŪLEHUNUI
REGIONAL
INFRASTRUCTURE

AUSTIN, TSUTSUMI & ASSOC., INC.
ENGINEERS, SUVEYORS • HONOLULU, HAWAII

BRYAN H. KOBA
LICENSED PROFESSIONAL ENGINEER
No. 14948
HAWAII U.S.A.

This work was prepared by me or under my supervision and construction of this project will be under my observation. (Observation of construction as defined in Chapter 16-115 Subchapter 1 Definitions of the Hawaii Administrative Rules "Professional Engineers, Architects, Surveyors, and Landscape Architects.")

SIGNATURE APRIL 30, 2020
EXP. DATE OF THE LICENSE

0 1 2
LINE IS 2 INCHES AT FULL SIZE
(If NOT 2-inches : Scale Accordingly)

REVISION	DATE	BRIEF	BY

Project No:	16-576
Scale:	AS NOTED
Date:	1/31/2020
Designed By:	BHK
Drawn By:	BHK
Checked By:	

WWTP PIPING KEY PLAN

DWG. NO.

CB-9

SHEET 81 OF 201

FILE	POCKET	FOLDER	NO.

LEGEND

6" PD — PIPE SIZE AND PROCESS IDENTIFICATION

PD3 — PIPE PROFILE NAME

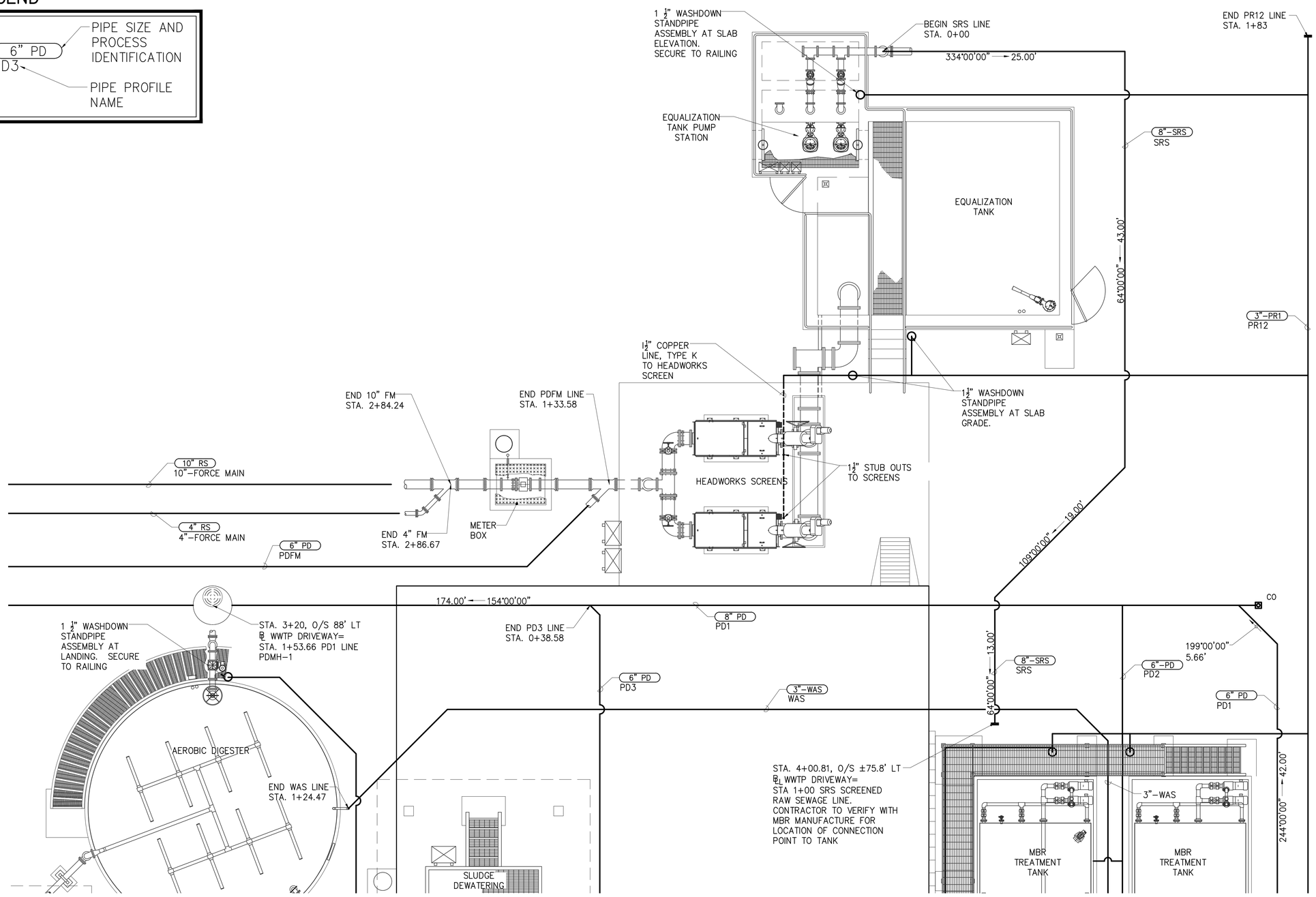

WWTP PIPING PLAN – 1

SCALE: 1"=5'

AustinTsutsumi & ASSOCIATES, INC.
CIVIL ENGINEERS I SURVEYORS
HONOLULU I WAILUKU I HILO, HAWAII

501 SUMNER STREET, SUITE 521
HONOLULU, HAWAII 96817

PHONE: 808-533-3646
FAX: 808-526-1267

STATE OF HAWAII
DEPARTMENT OF
HAWAIIAN HOME LANDS

PŪLEHUNUI
REGIONAL
INFRASTRUCTURE

AUSTIN, TSUTSUMI & ASSOC., INC.
ENGINEERS, SUVEYORS • HONOLULU, HAWAII

BRYAN H. KOBA
LICENSED PROFESSIONAL ENGINEER
No. 14948
HAWAII U.S.A.

This work was prepared by me or under my supervision and construction of this project will be under my observation. (Observation of construction as defined in Chapter 16-115 Subchapter 1 Definitions of the Hawaii Administrative Rules "Professional Engineers, Architects, Surveyors, and Landscape Architects.")

SIGNATURE — APRIL 30, 2020 — EXP. DATE OF THE LICENSE

0 1 2
LINE IS 2 INCHES AT FULL SIZE
(If NOT 2-inches : Scale Accordingly)

REVISION	DATE	BRIEF	BY

Project No:	16-576
Scale:	AS NOTED
Date:	1/31/2020
Designed By:	BHK
Drawn By:	BHK
Checked By:	

WWTP PIPING PLAN – 1

DWG. NO.

CB-10

SHEET 82 OF 201

FILE	POCKET	FOLDER	NO.

JOB NO. O-11-056.004
FN: C:\PROJECT FOLDER\16-576 DHHL PROJECT\ENGINEERING\DWG\CONSTRUCTION DRAWING SET\CB-10 WWTP PIPING PLAN - 1.DWG

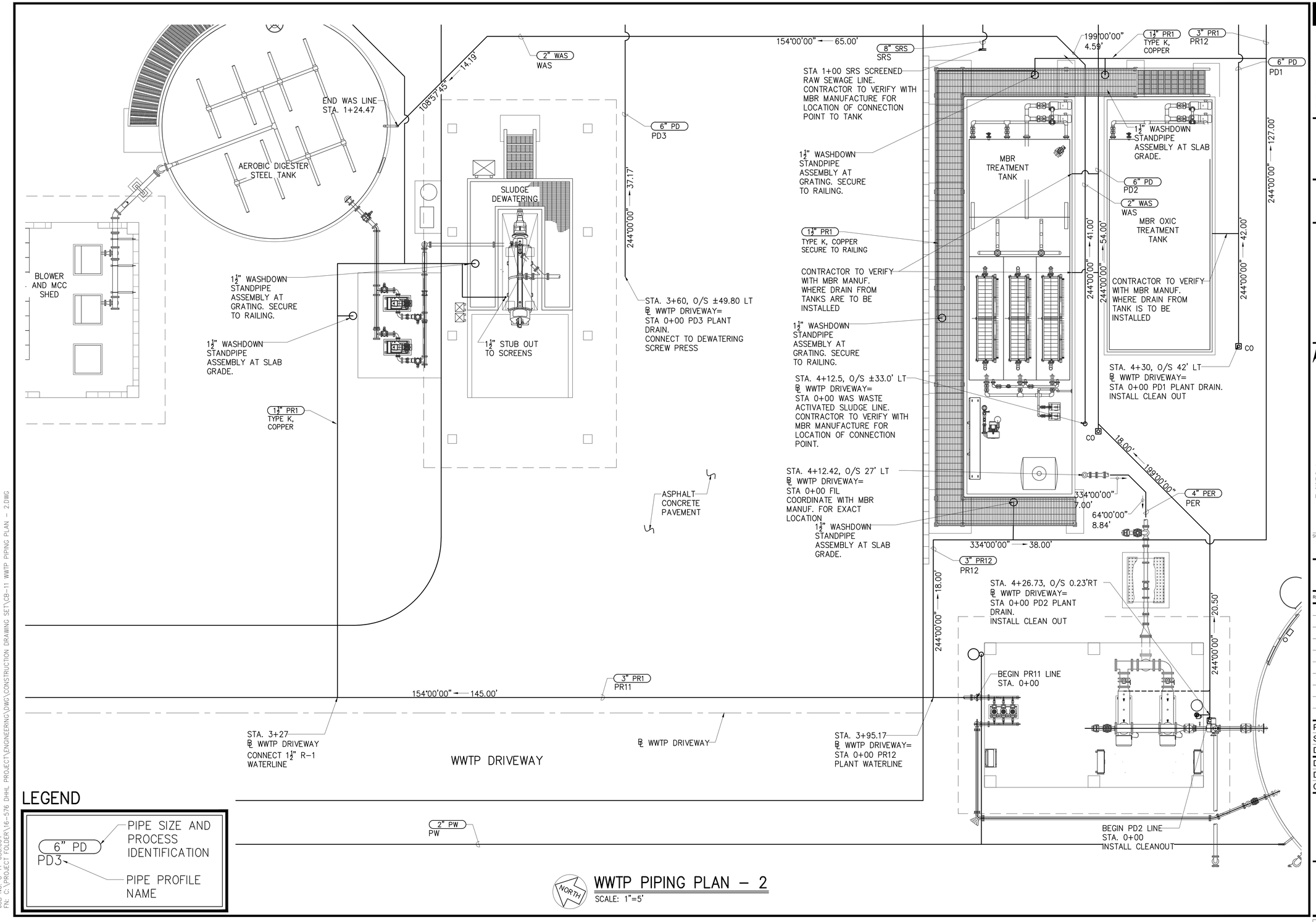

LEGEND

6" PD — PIPE SIZE AND PROCESS IDENTIFICATION

PD3 — PIPE PROFILE NAME

WWTP PIPING PLAN – 2

SCALE: 1"=5'

AustinTsutsumi & ASSOCIATES, INC.
CIVIL ENGINEERS I SURVEYORS
HONOLULU I WAILUKU I HILO, HAWAII

501 SUMNER STREET, SUITE 521
HONOLULU, HAWAII 96817

PHONE: 808-533-3646
FAX: 808-526-1267

STATE OF HAWAII
DEPARTMENT OF
HAWAIIAN HOME LANDS

PŪLEHUNUI
REGIONAL
INFRASTRUCTURE

AUSTIN, TSUTSUMI & ASSOC., INC.
ENGINEERS, SUVEYORS • HONOLULU, HAWAII

BRYAN H. KOBA
LICENSED PROFESSIONAL ENGINEER
No. 14948
HAWAII U.S.A.

This work was prepared by me or under my supervision and construction of this project will be under my observation. (Observation of construction as defined in Chapter 16-115 Subchapter 1 Definitions of the Hawaii Administrative Rules "Professional Engineers, Architects, Surveyors, and Landscape Architects.")

SIGNATURE — APRIL 30, 2020 — EXP. DATE OF THE LICENSE

0 1 2
LINE IS 2 INCHES AT FULL SIZE
(If NOT 2-inches : Scale Accordingly)

REVISION	DATE	BRIEF	BY

Project No:	16-576
Scale:	AS NOTED
Date:	1/31/2020
Designed By:	BHK
Drawn By:	BHK
Checked By:	

WWTP PIPING PLAN – 2

DWG. NO.

CB-11

SHEET 83 OF 201

FILE	POCKET	FOLDER	NO.

JOB NO. 0-11-056.004
FN: C:\PROJECT FOLDER\16-576 DHHL PROJECT\ENGINEERING\DWG\CONSTRUCTION DRAWING SET\CB-11 WWTP PIPING PLAN - 2.DWG

LEGEND

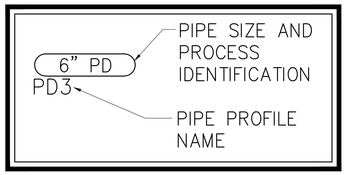

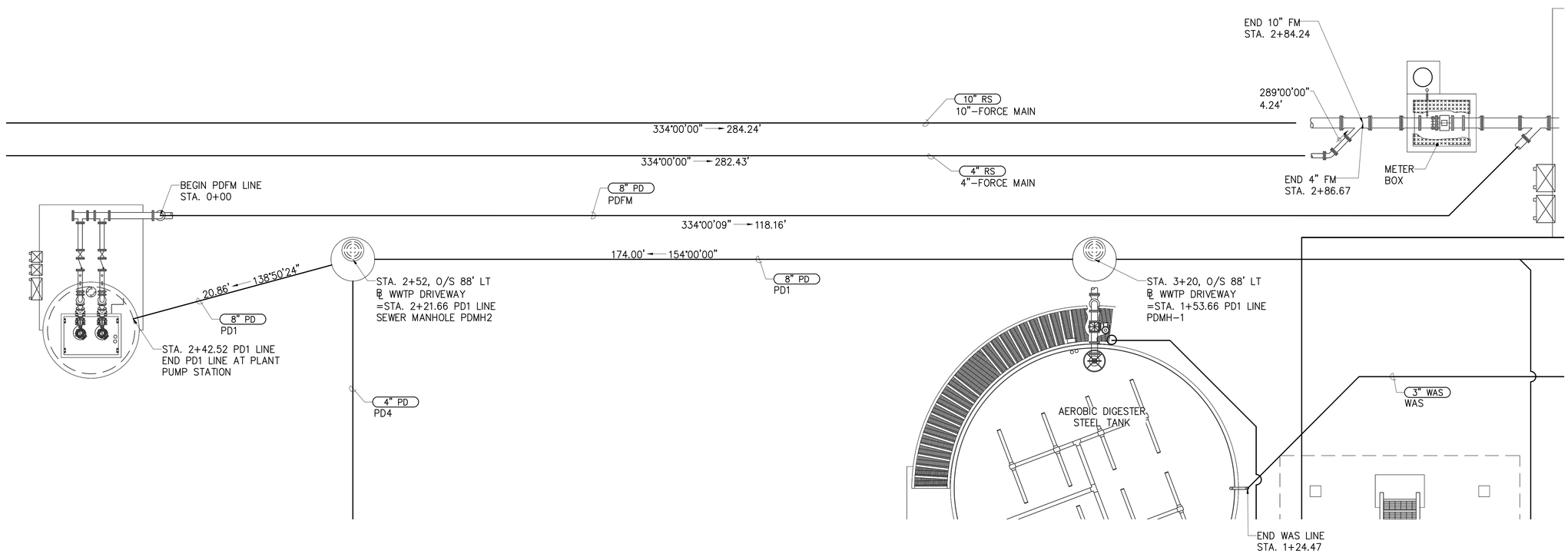

NORTH

WWTP PIPING PLAN – 3

SCALE: 1"=5'

AustinTsutsumi
& ASSOCIATES, INC.
CIVIL ENGINEERS I SURVEYORS
HONOLULU I WAILUKU I HILO, HAWAII

501 SUMNER STREET, SUITE 521
HONOLULU, HAWAII 96817

PHONE: 808-533-3646
FAX: 808-526-1267

STATE OF HAWAII
DEPARTMENT OF
HAWAIIAN HOME LANDS

PŪLEHUNUI
REGIONAL
INFRASTRUCTURE

AUSTIN, TSUTSUMI & ASSOC., INC.
ENGINEERS, SUVEYORS • HONOLULU, HAWAII

BRYAN H. KOBA
LICENSED PROFESSIONAL ENGINEER
No. 14948
HAWAII U.S.A.

This work was prepared by me or under my supervision and construction of this project will be under my observation. (Observation of construction as defined in Chapter 16-115 Subchapter 1 Definitions of the Hawaii Administrative Rules "Professional Engineers, Architects, Surveyors, and Landscape Architects.")

SIGNATURE APRIL 30, 2020
EXP. DATE OF THE LICENSE

0 1 2
LINE IS 2 INCHES AT FULL SIZE
(If NOT 2-inches : Scale Accordingly)

REVISION	DATE	BRIEF	BY

Project No:	16-576
Scale:	AS NOTED
Date:	1/31/2020
Designed By:	BHK
Drawn By:	BHK
Checked By:	

WWTP PIPING PLAN – 3

DWG. NO.

CB-12

SHEET 84 OF 201

FILE	POCKET	FOLDER	NO.

JOB NO. O-11-056.004
FN: C:\PROJECT FOLDER\16-576 DHHL PROJECT\ENGINEERING\DWG\CONSTRUCTION DRAWING SET\CB-12 WWTP PIPING PLAN – 3.DWG

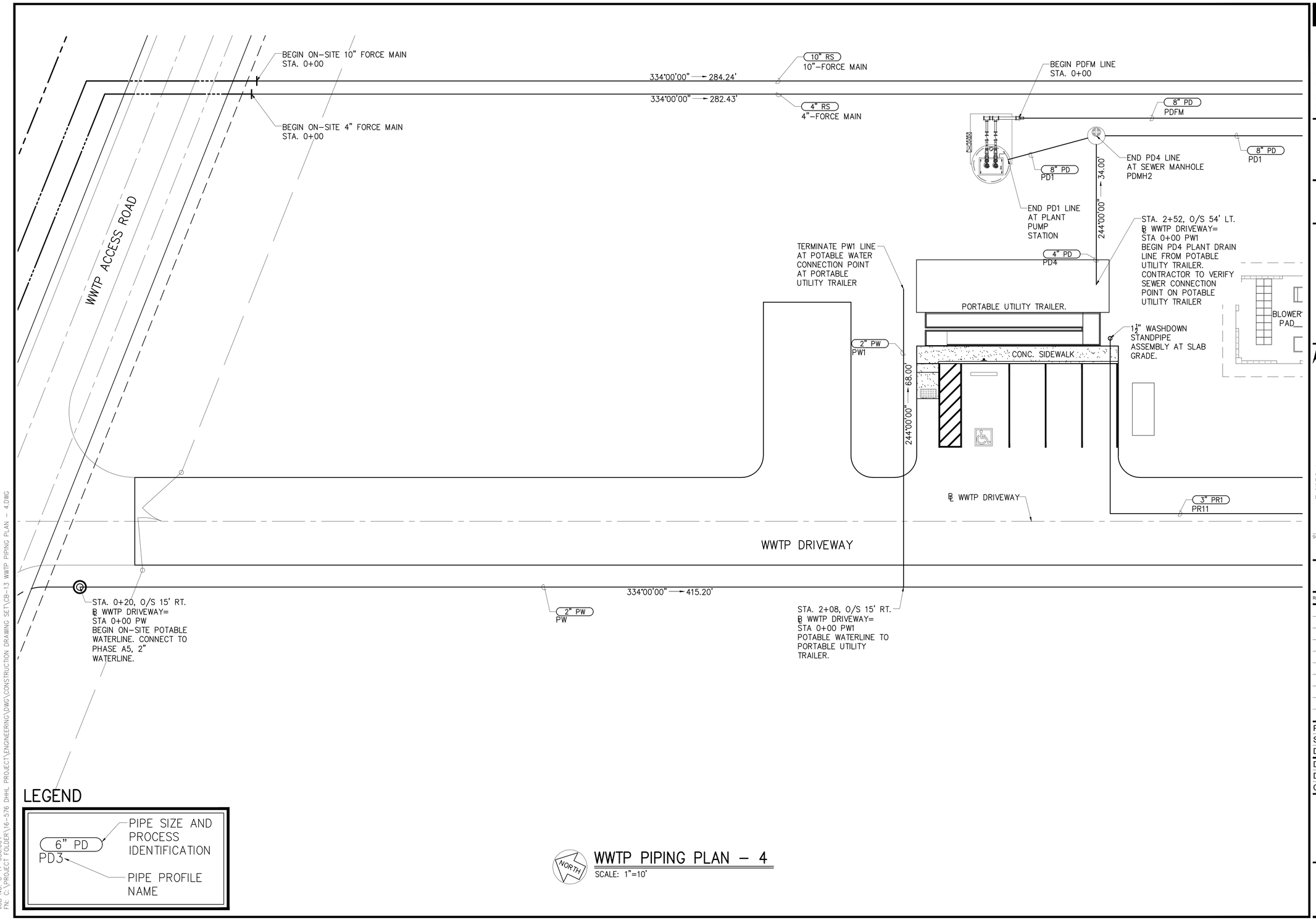

WWTP PIPING PLAN – 4

SCALE: 1"=10'

JOB NO. O-11-056.004
FN: C:\PROJECT FOLDER\16-576 DHHL PROJECT\ENGINEERING\DWG\CONSTRUCTION DRAWING SET\CB-13 WWTP PIPING PLAN - 4.DWG

AustinTsutsumi
& ASSOCIATES, INC.
CIVIL ENGINEERS I SURVEYORS
HONOLULU I WAILUKU I HILO, HAWAII

501 SUMNER STREET, SUITE 521
HONOLULU, HAWAII 96817

PHONE: 808-533-3646
FAX: 808-526-1267

STATE OF HAWAII
DEPARTMENT OF
HAWAIIAN HOME LANDS

PŪLEHUNUI
REGIONAL
INFRASTRUCTURE

AUSTIN, TSUTSUMI & ASSOC., INC.
ENGINEERS, SUVEYORS • HONOLULU, HAWAII

BRYAN H. KOBA
LICENSED PROFESSIONAL ENGINEER
No. 14948
HAWAII U.S.A.

This work was prepared by me or under my supervision and construction of this project will be under my observation. (Observation of construction as defined in Chapter 16-115 Subchapter 1 Definitions of the Hawaii Administrative Rules "Professional Engineers, Architects, Surveyors, and Landscape Architects.")

SIGNATURE — APRIL 30, 2020 EXP. DATE OF THE LICENSE

0 1 2
LINE IS 2 INCHES AT FULL SIZE
(If NOT 2-inches : Scale Accordingly)

REVISION	DATE	BRIEF	BY

Project No:	16-576
Scale:	AS NOTED
Date:	1/31/2020
Designed By:	BHK
Drawn By:	BHK
Checked By:	

WWTP PIPING PLAN – 4

DWG. NO.

CB-13

SHEET 85 OF 201

FILE	POCKET	FOLDER	NO.

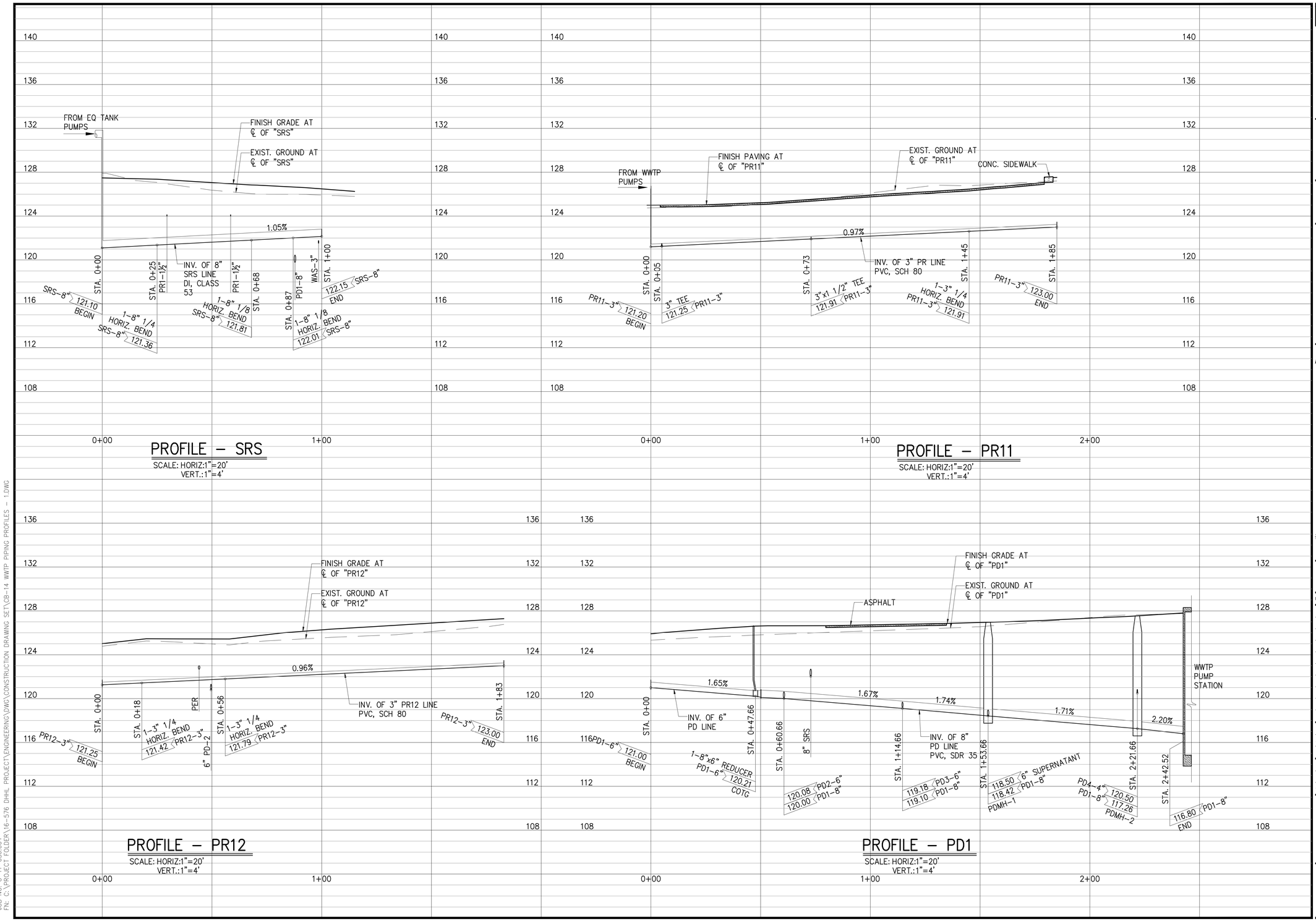

JOB NO. 0-11-056.004
FN: C:\PROJECT FOLDER\16-576 DHHL PROJECT\ENGINEERING\DWG\CONSTRUCTION DRAWING SET\CB-14 WWTP PIPING PROFILES - 1.DWG

AustinTsutsumi & ASSOCIATES, INC.
CIVIL ENGINEERS I SURVEYORS
HONOLULU I WAILUKU I HILO, HAWAII

501 SUMNER STREET, SUITE 521
HONOLULU, HAWAII 96817

PHONE: 808-533-3646
FAX: 808-526-1267

STATE OF HAWAII
DEPARTMENT OF HAWAIIAN HOME LANDS

PŪLEHUNUI REGIONAL INFRASTRUCTURE

AUSTIN, TSUTSUMI & ASSOC., INC.
ENGINEERS, SUVEYORS • HONOLULU, HAWAII

BRYAN H. KOBA
LICENSED PROFESSIONAL ENGINEER
No. 14948
HAWAII U.S.A.

This work was prepared by me or under my supervision and construction of this project will be under my observation. (Observation of construction as defined in Chapter 16-115 Subchapter 1 Definitions of the Hawaii Administrative Rules "Professional Engineers, Architects, Surveyors, and Landscape Architects.")

SIGNATURE — APRIL 30, 2020 EXP. DATE OF THE LICENSE

0 1 2
LINE IS 2 INCHES AT FULL SIZE
(If NOT 2-inches : Scale Accordingly)

REVISION	DATE	BRIEF	BY

Project No:	16-576
Scale:	AS NOTED
Date:	1/31/2020
Designed By:	BHK
Drawn By:	BHK
Checked By:	

WWTP PIPING PROFILES – 1

DWG. NO.
CB-14

SHEET 86 OF 201

FILE	POCKET	FOLDER	NO.

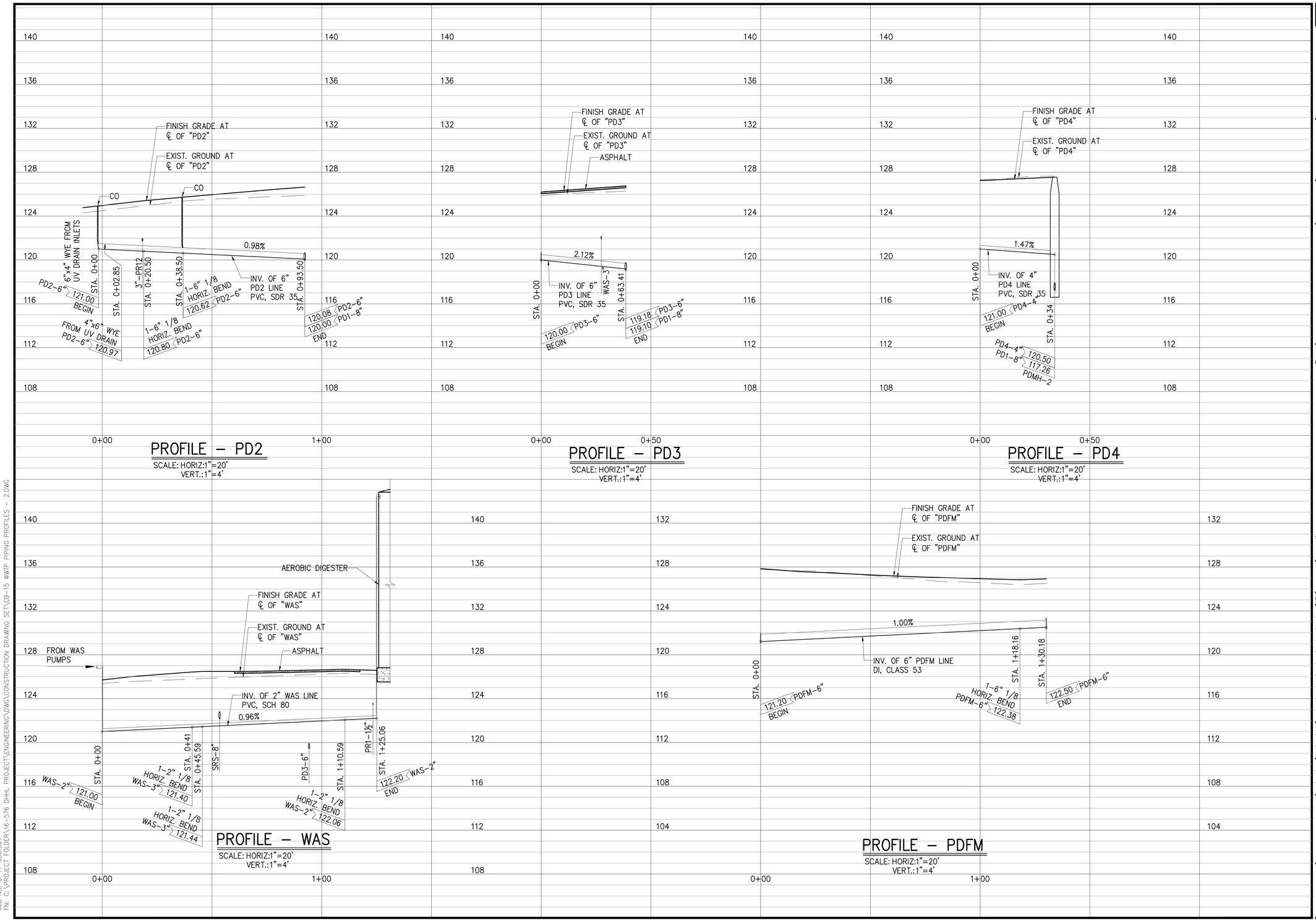

AustinTsutsumi & ASSOCIATES, INC.
CIVIL ENGINEERS I SURVEYORS
HONOLULU I WAILUKU I HILO, HAWAII

501 SUMNER STREET, SUITE 521
HONOLULU, HAWAII 96817

PHONE: 808-533-3646
FAX: 808-526-1267

STATE OF HAWAII
DEPARTMENT OF
HAWAIIAN HOME LANDS

PŪLEHUNUI
REGIONAL
INFRASTRUCTURE

AUSTIN, TSUTSUMI & ASSOC., INC.
ENGINEERS, SUVEYORS • HONOLULU, HAWAII

BRYAN H. KOBA
LICENSED PROFESSIONAL ENGINEER
No. 14948
HAWAII U.S.A.

This work was prepared by me or under my supervision and construction of this project will be under my observation. (Observation of construction as defined in Chapter 16-115 Subchapter 1 Definitions of the Hawaii Administrative Rules "Professional Engineers, Architects, Surveyors, and Landscape Architects.")

SIGNATURE — APRIL 30, 2020 EXP. DATE OF THE LICENSE

0 1 2
LINE IS 2 INCHES AT FULL SIZE
(If NOT 2-inches : Scale Accordingly)

REVISION	DATE	BRIEF	BY

Project No:	16-576
Scale:	AS NOTED
Date:	1/31/2020
Designed By:	BHK
Drawn By:	BHK
Checked By:	

WWTP PIPING PROFILES - 2

DWG. NO.

CB-15

SHEET 87 OF 201

FILE	POCKET	FOLDER	NO.

JOB NO. 0-11-056.004
FN: C:\PROJECT FOLDER\16-576 DHHL PROJECT\ENGINEERING\DWG\CONSTRUCTION DRAWING SET\CB-15 WWTP PIPING PROFILES - 2.DWG

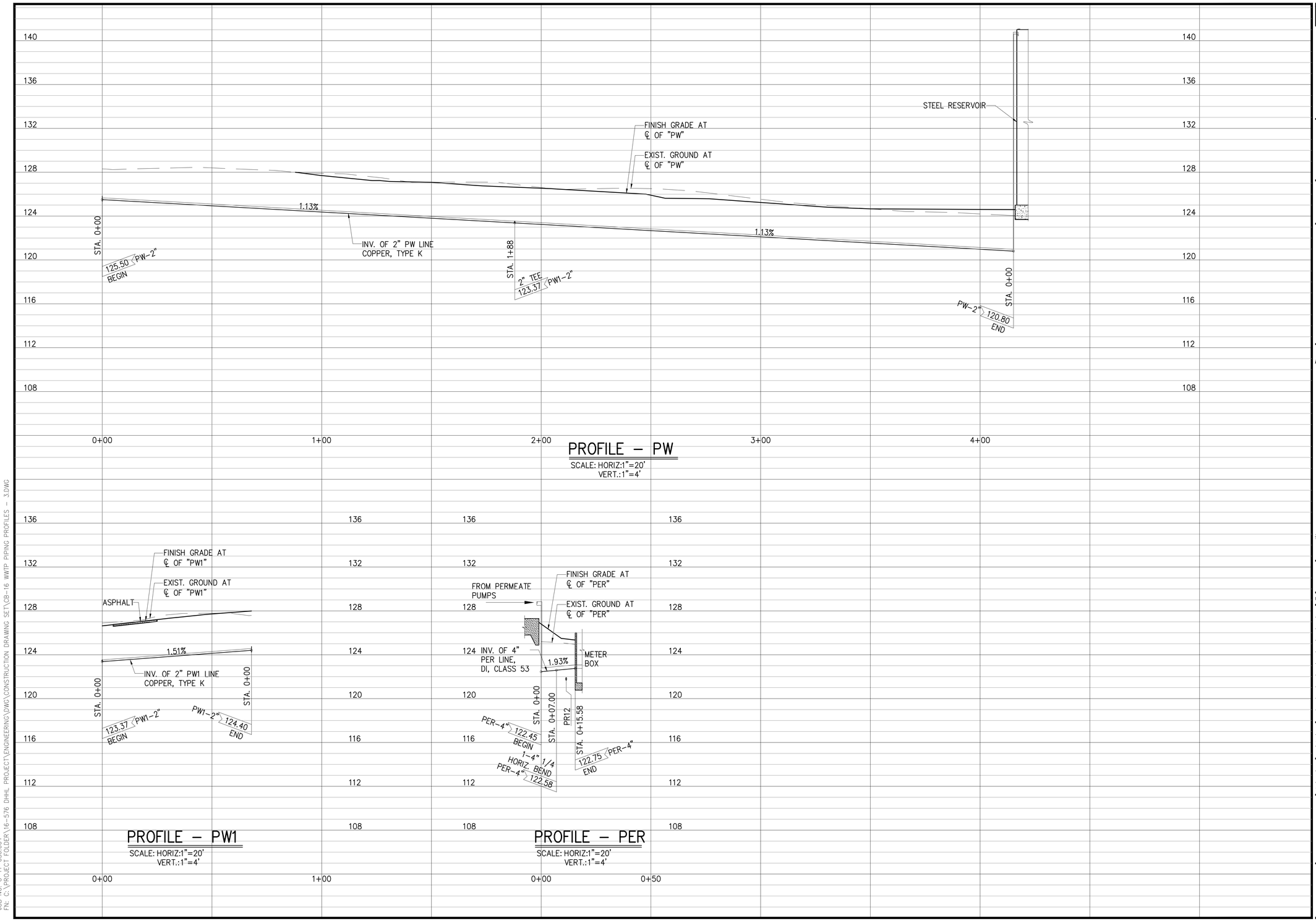

JOB NO. 0-11-056.004
FN: C:\PROJECT FOLDER\16-576 DHHL PROJECT\ENGINEERING\DWG\CONSTRUCTION DRAWING SET\CB-16 WWTP PIPING PROFILES - 3.DWG

AustinTsutsumi
& ASSOCIATES, INC.
CIVIL ENGINEERS I SURVEYORS
HONOLULU I WAILUKU I HILO, HAWAII

501 SUMNER STREET, SUITE 521
HONOLULU, HAWAII 96817

PHONE: 808-533-3646
FAX: 808-526-1267

STATE OF HAWAII
DEPARTMENT OF
HAWAIIAN HOME LANDS

PŪLEHUNUI
REGIONAL
INFRASTRUCTURE

AUSTIN, TSUTSUMI & ASSOC., INC.
ENGINEERS, SUVEYORS • HONOLULU, HAWAII

BRYAN H. KOBA
LICENSED PROFESSIONAL ENGINEER
No. 14948
HAWAII U.S.A.

This work was prepared by me or under my supervision and construction of this project will be under my observation. (Observation of construction as defined in Chapter 16-115 Subchapter 1 Definitions of the Hawaii Administrative Rules "Professional Engineers, Architects, Surveyors, and Landscape Architects.")

SIGNATURE — APRIL 30, 2020 EXP. DATE OF THE LICENSE

0 1 2
LINE IS 2 INCHES AT FULL SIZE
(If NOT 2-inches : Scale Accordingly)

REVISION	DATE	BRIEF	BY

Project No:	16-576
Scale:	AS NOTED
Date:	1/31/2020
Designed By:	BHK
Drawn By:	BHK
Checked By:	

WWTP PIPING PROFILES – 3

DWG. NO.

CB-16

SHEET 88 OF 201

FILE	POCKET	FOLDER	NO.

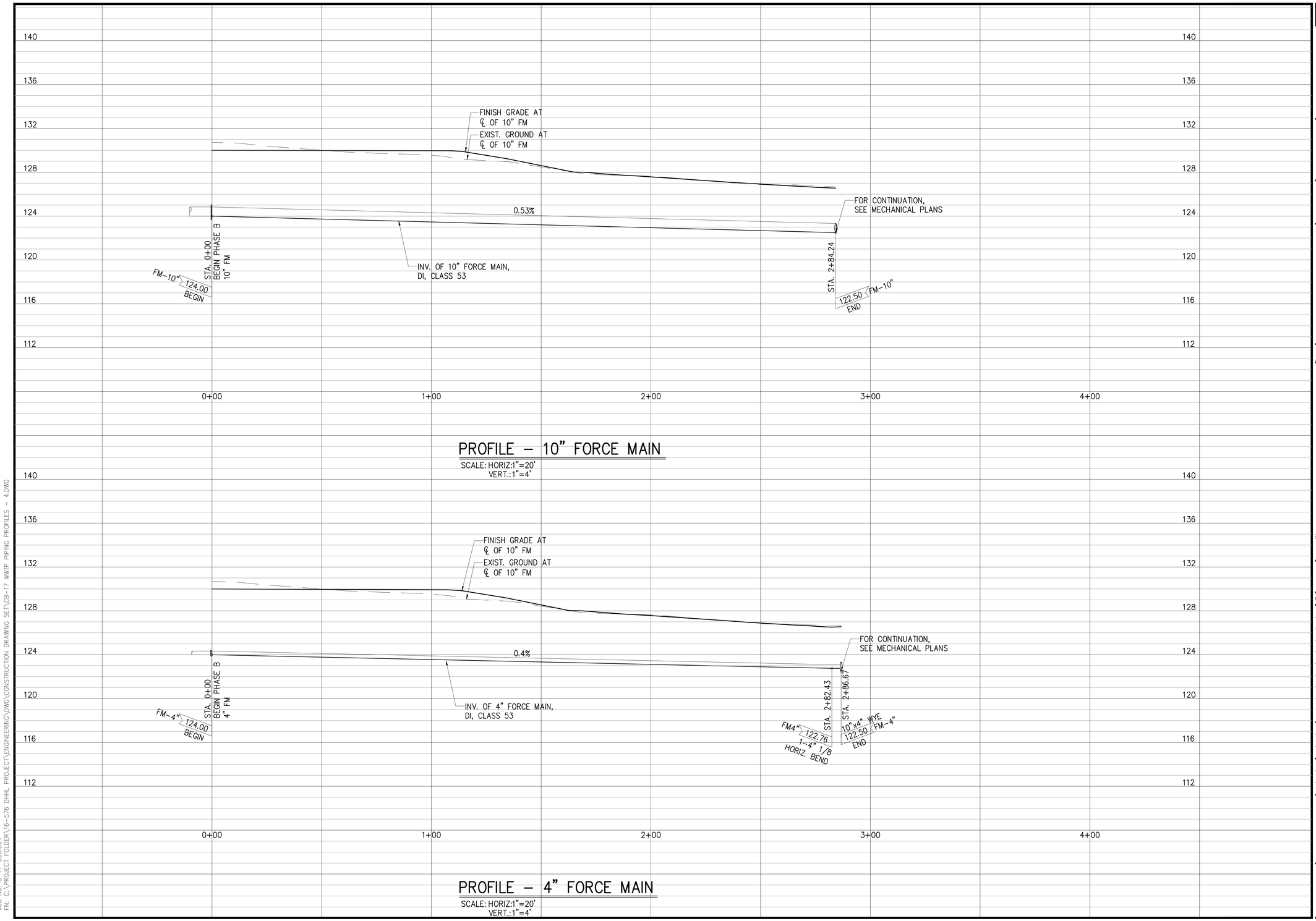

JOB NO. 0-11-056.004
FN: C:\PROJECT FOLDER\16-576 DHHL PROJECT\ENGINEERING\DWG\CONSTRUCTION DRAWING SET\CB-17 WWTP PIPING PROFILES - 4.DWG

AustinTsutsumi
& ASSOCIATES, INC.
CIVIL ENGINEERS I SURVEYORS
HONOLULU I WAILUKU I HILO, HAWAII

501 SUMNER STREET, SUITE 521
HONOLULU, HAWAII 96817

PHONE: 808-533-3646
FAX: 808-526-1267

STATE OF HAWAII
DEPARTMENT OF
HAWAIIAN HOME LANDS

PŪLEHUNUI
REGIONAL
INFRASTRUCTURE

AUSTIN, TSUTSUMI & ASSOC., INC.
ENGINEERS, SUVEYORS • HONOLULU, HAWAII

BRYAN H. KOBA
LICENSED PROFESSIONAL ENGINEER
No. 14948
HAWAII U.S.A.

This work was prepared by me or under my supervision and construction of this project will be under my observation. (Observation of construction as defined in Chapter 16-115 Subchapter 1 Definitions of the Hawaii Administrative Rules "Professional Engineers, Architects, Surveyors, and Landscape Architects.")

SIGNATURE — APRIL 30, 2020 EXP. DATE OF THE LICENSE

0 1 2
LINE IS 2 INCHES AT FULL SIZE
(If NOT 2-inches : Scale Accordingly)

REVISION	DATE	BRIEF	BY

Project No:	16-576
Scale:	AS NOTED
Date:	1/31/2020
Designed By:	BHK
Drawn By:	BHK
Checked By:	

WWTP PIPING PROFILES – 4

DWG. NO.
CB-17

SHEET 89 OF 201

FILE	POCKET	FOLDER	NO.

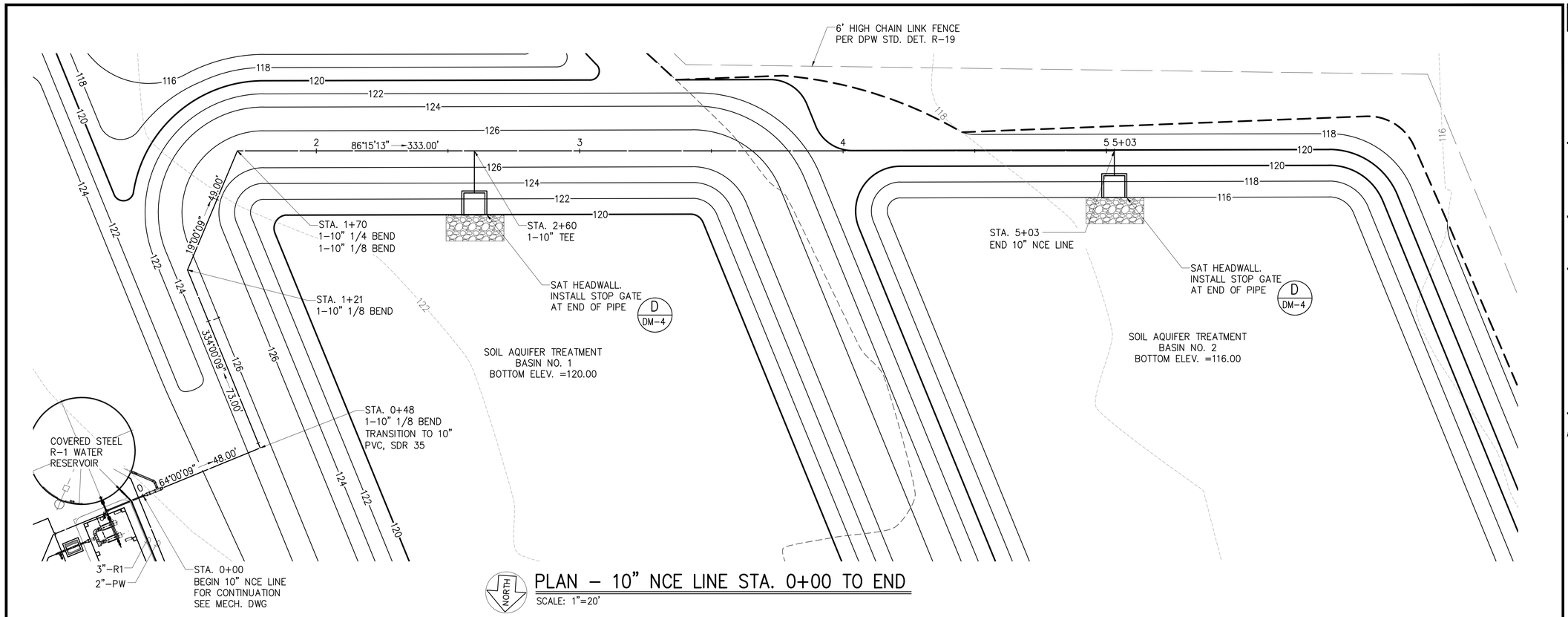

PLAN – 10" NCE LINE STA. 0+00 TO END

SCALE: 1"=20'

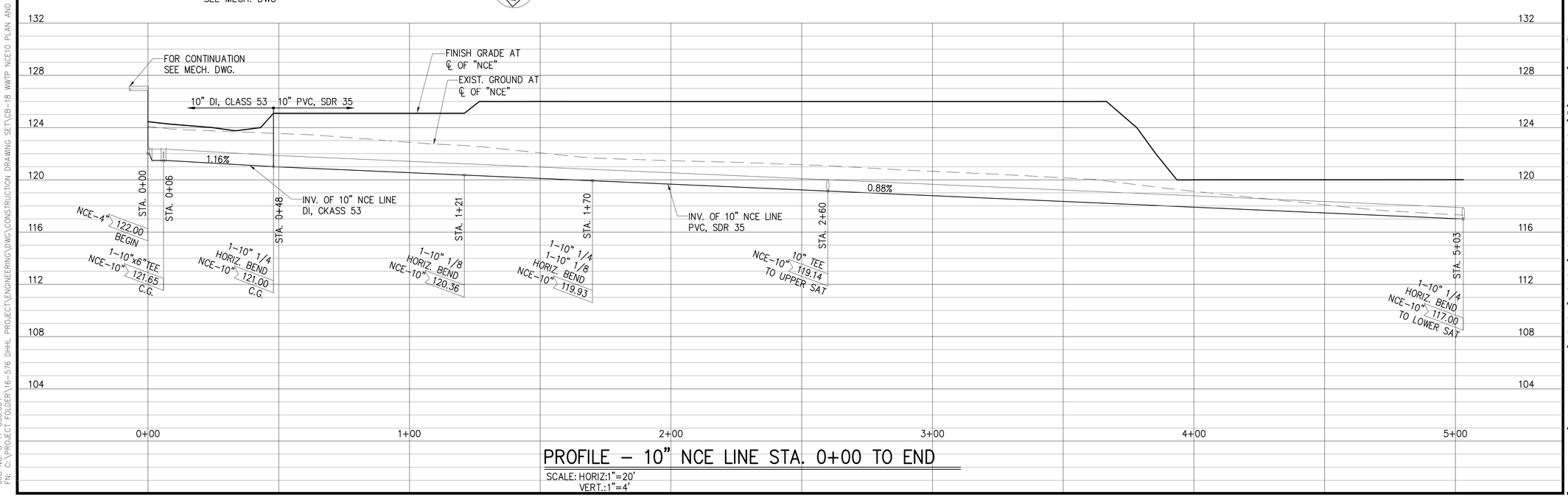

PROFILE – 10" NCE LINE STA. 0+00 TO END

SCALE: HORIZ:1"=20'
VERT.:1"=4'

AustinTsutsumi
& ASSOCIATES, INC.
CIVIL ENGINEERS I SURVEYORS
HONOLULU I WAILUKU I HILO, HAWAII

501 SUMNER STREET, SUITE 521
HONOLULU, HAWAII 96817

PHONE: 808-533-3646
FAX: 808-526-1267

STATE OF HAWAII
DEPARTMENT OF
HAWAIIAN HOME LANDS

PŪLEHUNUI
REGIONAL
INFRASTRUCTURE

AUSTIN, TSUTSUMI & ASSOC., INC.
ENGINEERS, SUVEYORS • HONOLULU, HAWAII

BRYAN H. KOBA
LICENSED PROFESSIONAL ENGINEER
No. 14948
HAWAII U.S.A.

This work was prepared by me or under my supervision and construction of this project will be under my observation. (Observation of construction as defined in Chapter 16-115 Subchapter 1 Definitions of the Hawaii Administrative Rules "Professional Engineers, Architects, Surveyors, and Landscape Architects.")

SIGNATURE — APRIL 30, 2020 — EXP. DATE OF THE LICENSE

0 1 2
LINE IS 2 INCHES AT FULL SIZE
(If NOT 2-inches : Scale Accordingly)

REVISION	DATE	BRIEF	BY

Project No:	16-576
Scale:	AS NOTED
Date:	1/31/2020
Designed By:	BHK
Drawn By:	BHK
Checked By:	

PLAN AND PROFILE
10" NCE LINE

DWG. NO.
CB-18

SHEET 90 OF 201

FILE	POCKET	FOLDER	NO.

JOB NO. 0-11-056.004
FN: C:\PROJECT FOLDER\16-576 DHHL PROJECT\ENGINEERING\DWG\CONSTRUCTION DRAWING SET\CB-18 WWTP NCE10 PLAN AND PROFILES.DWG

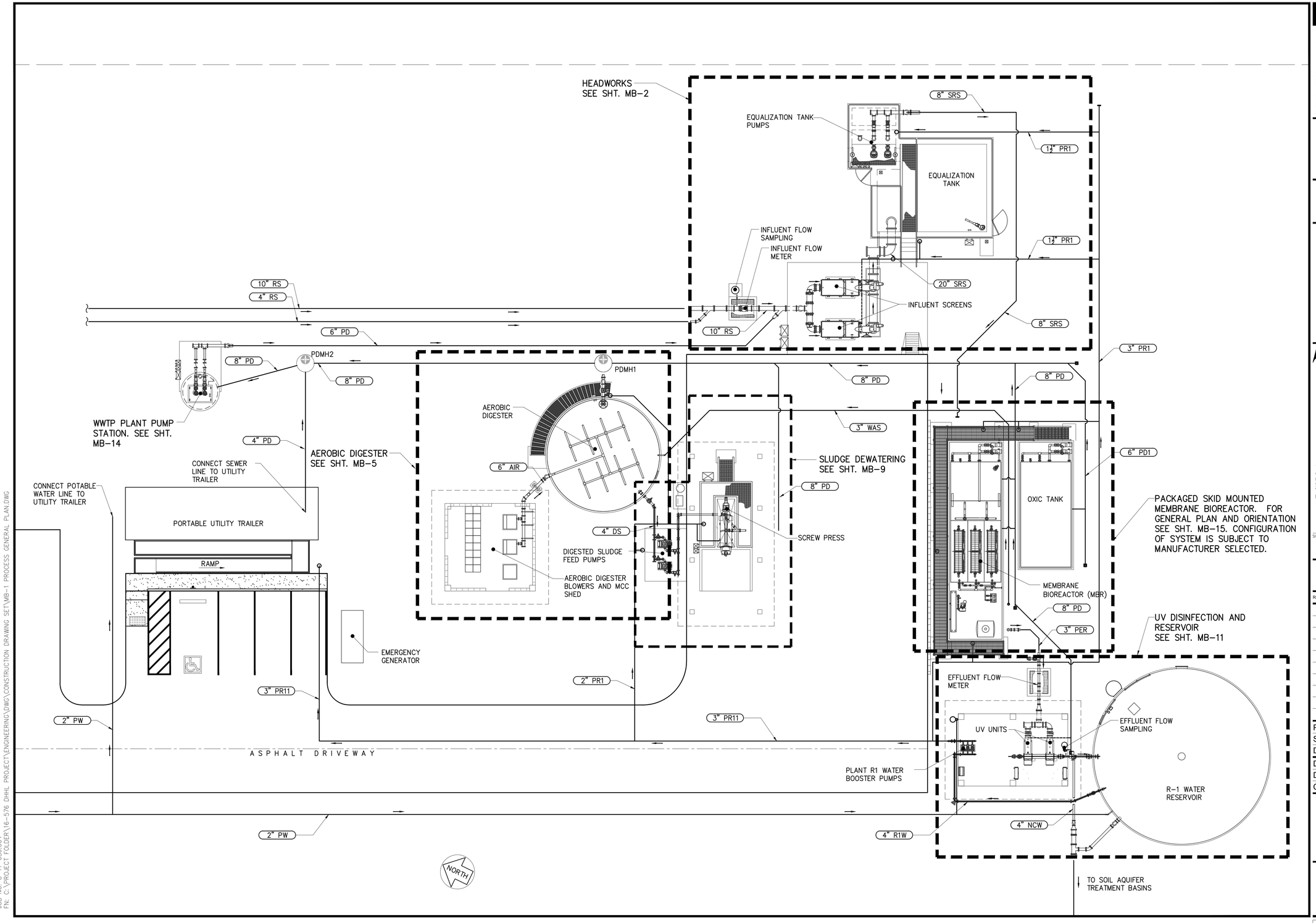

JOB NO. 0-11-056.004
FN: C:\PROJECT FOLDER\16-576 DHHL PROJECT\ENGINEERING\DWG\CONSTRUCTION DRAWING SET\MB-1 PROCESS GENERAL PLAN.DWG

AustinTsutsumi
& ASSOCIATES, INC.
CIVIL ENGINEERS I SURVEYORS
HONOLULU I WAILUKU I HILO, HAWAII

501 SUMNER STREET, SUITE 521
HONOLULU, HAWAII 96817

PHONE: 808-533-3646
FAX: 808-526-1267

STATE OF HAWAII
DEPARTMENT OF
HAWAIIAN HOME LANDS

PŪLEHUNUI
REGIONAL
INFRASTRUCTURE

AUSTIN, TSUTSUMI & ASSOC., INC.
ENGINEERS, SUVEYORS • HONOLULU, HAWAII

BRYAN H. KOBA
LICENSED PROFESSIONAL ENGINEER
No. 14948
HAWAII U.S.A.

This work was prepared by me or under my supervision and construction of this project will be under my observation. (Observation of construction as defined in Chapter 16-115 Subchapter 1 Definitions of the Hawaii Administrative Rules "Professional Engineers, Architects, Surveyors, and Landscape Architects.")

SIGNATURE — APRIL 30, 2020 EXP. DATE OF THE LICENSE

0 1 2
LINE IS 2 INCHES AT FULL SIZE
(If NOT 2-inches : Scale Accordingly)

REVISION	DATE	BRIEF	BY

Project No:	16-576
Scale:	AS NOTED
Date:	1/31/2020
Designed By:	BHK
Drawn By:	BHK
Checked By:	

WWTP PROCESS
GENERAL PLAN

DWG. NO.
MB-1

SHEET 91 OF 201

FILE	POCKET	FOLDER	NO.

ITEM	DESCRIPTION
1	10"x4" WYE, DI, MJ
2	10" SPOOL, DI, L=3'-0", PE
3	10" WALL SPOOL, DI, FExMJ
4	10" SPOOL, DI, LENGTH TO SUIT, FExPE
5	10" FLANGE COUPLING ADAPTER
6	10" SPOOL, DI, L=12", FE
7	10" SPOOL, DI, LENGTH TO SUIT, PE
8	10"x6" WYE, DI, MJ
9	10" 1/4 BEND, DI, MJ
10	10" 1/4 BEND, DI, FE
11	14"x10" TEE, DI, FE
12	14" FLANGE COUPLING ADAPTER
13	14" SPOOL, DI, LENGTH TO SUIT, FExPE
14	14" 1/4 BEND, DI, FE
15	16" SPOOL, DI, LENGTH TO SUIT, FE
16	16" 1/4 BEND, DI, FE
17	20"x16" TEE, DI, FE
18	20"x16" REDUCING ELBOW, DI, FE
19	20" SPOOL, DI, LENGTH TO SUIT, FE
20	20" WALL SPOOL, DI, FExPE
21	20" TEE, DI, FE
22	20" 1/4 BEND, DI, FE
23	20" BLIND FLANGE, DI
24	8" 1/4 BEND, DI, FE
25	8" SPOOL, DI, LENGTH TO SUIT, FExPE
26	8" 1/4 BEND, DI, MJ
27	8" SPOOL, DI, L=1'8", FE
28	8" SPOOL, DI, L=2'-10", PE
29	8"x6" TEE, DI, FE
30	8" BLIND FLANGE, DI
31	6" SPOOL, DI, LENGTH TO SUIT, FE
32	6" MEGAFLANGE 2100 OR APPROVED EQUAL
33	6" SPOOL, DI, LENGTH TO SUIT, FExPE
34	6" 1/4 BEND, DI, FE
35	6" SPOOL, DI, LENGTH TO SUIT, PE
36	6" 1/8 BEND, DI, MJ
37	4" SPOOL, DI, LENGTH TO SUIT, PE
38	4" 1/8 BEND, DI, MJ
39	20" FLANGE COUPLING ADAPTER

EQUIPMENT NO.	PUMP MANUF.	NO. OF UNITS	TYPE	MODEL NO.	FLOW, GPM	TDH. FT	SPEED, RPM	Hp	VAC	PHASE	FREQUENCY
P-0200 A/B	FLYGT	TWO (2)	SUBMERSIBLE	NP 3127 SH3-446	159	31.4	1750 (VAR)	7.5	480	3	60Hz

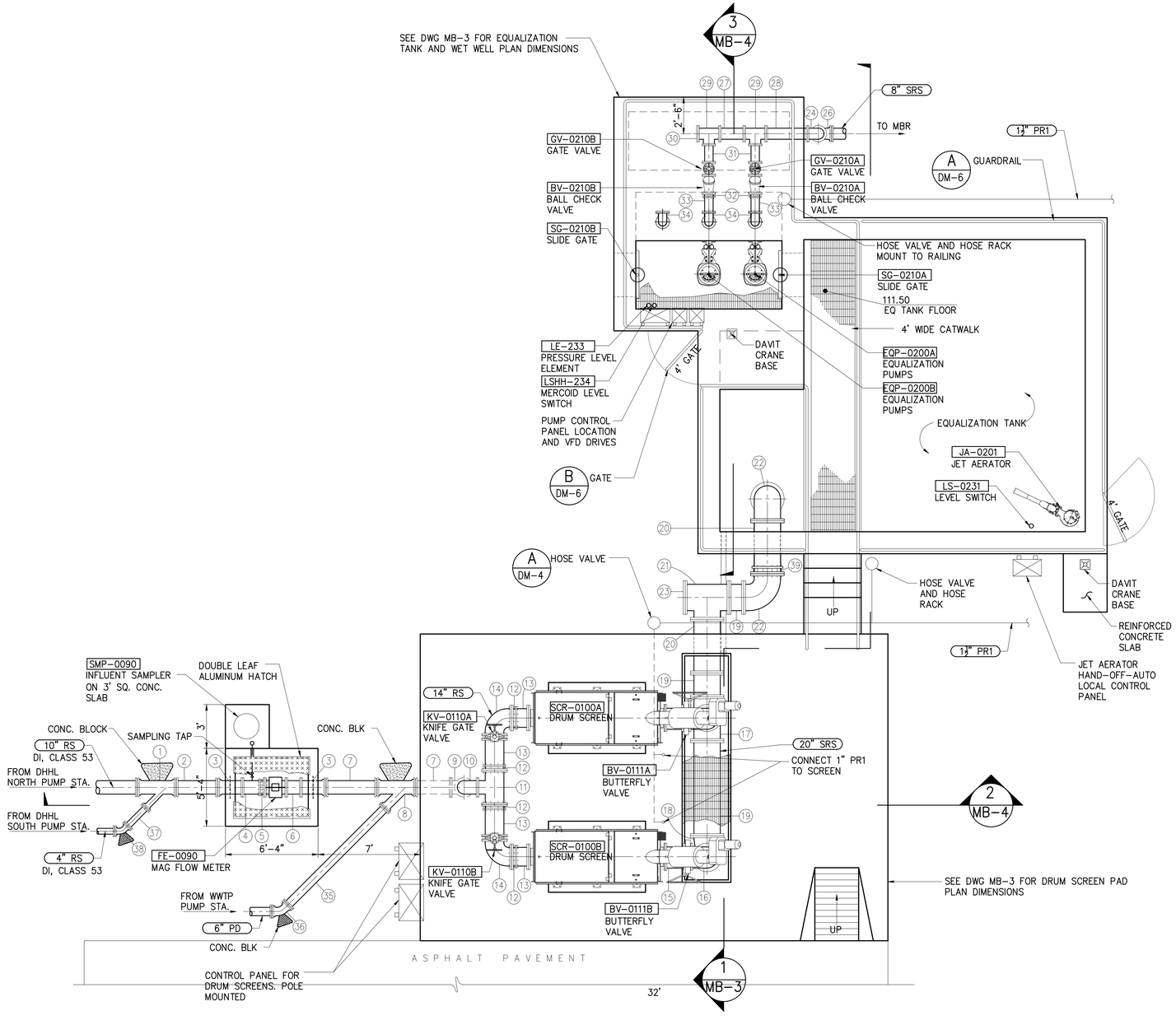

HEADWORKS PLAN

SCALE: 1/4"=1'-0"

AUSTIN TSUTSUMI & ASSOCIATES, INC.
CIVIL ENGINEERS I SURVEYORS
HONOLULU I WAILUKU I HILO, HAWAII

501 SUMNER STREET, SUITE 521
HONOLULU, HAWAII 96817

PHONE: 808-533-3646
FAX: 808-526-1267

STATE OF HAWAII
DEPARTMENT OF
HAWAIIAN HOME LANDS

PŪLEHUNUI
REGIONAL
INFRASTRUCTURE

AUSTIN, TSUTSUMI & ASSOC., INC.
ENGINEERS, SUVEYORS • HONOLULU, HAWAII

BRYAN H. KOBA
LICENSED PROFESSIONAL ENGINEER
No. 14948
HAWAII U.S.A.

This work was prepared by me or under my supervision and construction of this project will be under my observation. (Observation of construction as defined in Chapter 16-115 Subchapter 1 Definitions of the Hawaii Administrative Rules "Professional Engineers, Architects, Surveyors, and Landscape Architects.")

SIGNATURE APRIL 30, 2020 EXP. DATE OF THE LICENSE

0 1 2
LINE IS 2 INCHES AT FULL SIZE
(If NOT 2-inches : Scale Accordingly)

REVISION	DATE	BRIEF	BY

Project No:	16-576
Scale:	AS NOTED
Date:	1/31/2020
Designed By:	BHK
Drawn By:	BHK
Checked By:	

HEADWORKS PLAN

DWG. NO.

MB-2

SHEET 92 OF 201

FILE	POCKET	FOLDER	NO.

JOB NO. 0-11-056.004
FN: C:\PROJECT FOLDER\16-576 DHHL PROJECT\ENGINEERING\DWG\CONSTRUCTION DRAWING SET\MB-2 HEADWORKS PLAN.DWG

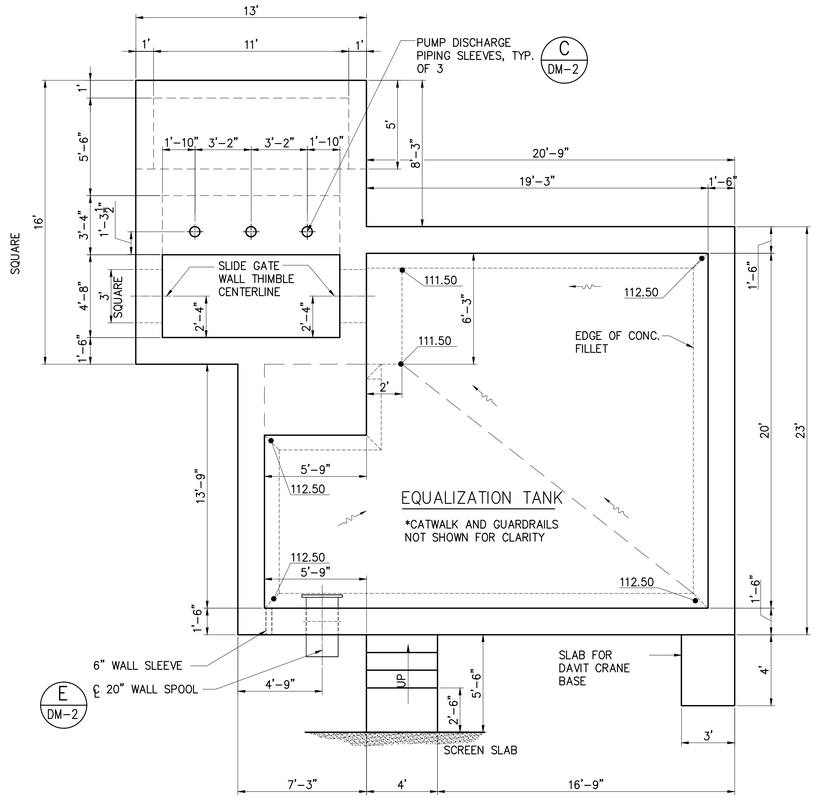

EQUALIZATION TANK PARTIAL PLAN

SCALE: 1/4"=1'-0"

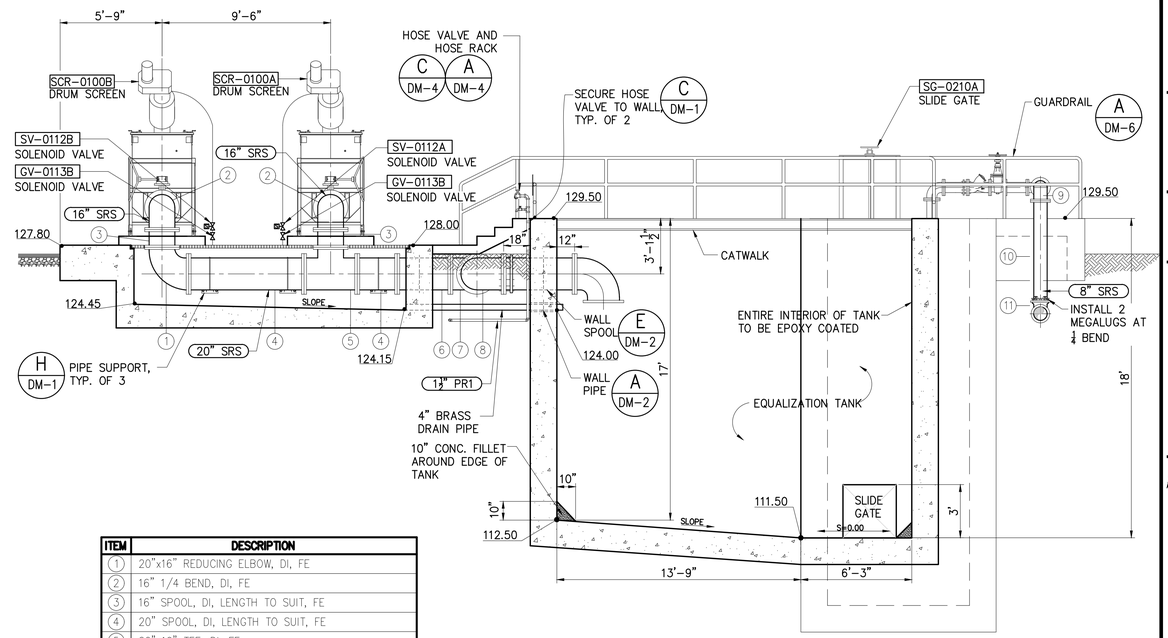

ITEM	DESCRIPTION
1	20"x16" REDUCING ELBOW, DI, FE
2	16" 1/4 BEND, DI, FE
3	16" SPOOL, DI, LENGTH TO SUIT, FE
4	20" SPOOL, DI, LENGTH TO SUIT, FE
5	20"x16" TEE, DI, FE
6	20" DI, WALL SPOOL
7	20" TEE, DI, FE
8	20" 1/4 BEND, DI, FE
9	8" 1/4 BEND, DI, FE
10	8" SPOOL, DI, LENGTH TO SUIT, FExPE
11	8" 1/4 BEND, DI, MJ

SECTION 1 MB-3

SCALE: 1/4"=1'-0"

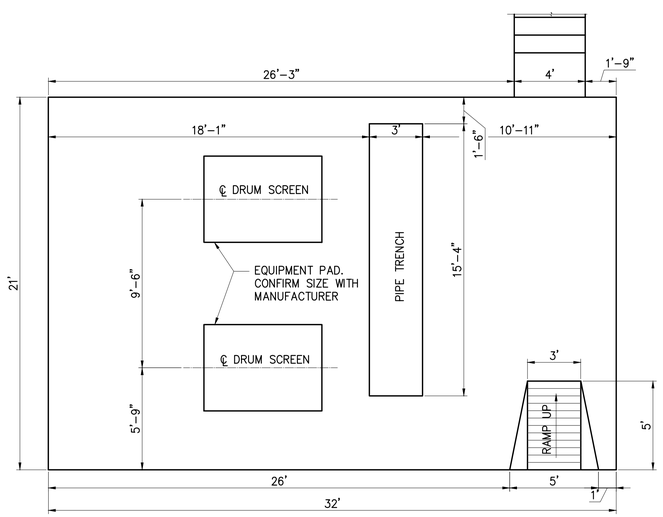

DRUM SCREEN SLAB PARTIAL PLAN

SCALE: 1/4"=1'-0"

AustinTsutsumi & ASSOCIATES, INC.
CIVIL ENGINEERS I SURVEYORS
HONOLULU I WAILUKU I HILO, HAWAII

501 SUMNER STREET, SUITE 521
HONOLULU, HAWAII 96817

PHONE: 808-533-3646
FAX: 808-526-1267

STATE OF HAWAII
DEPARTMENT OF
HAWAIIAN HOME LANDS

PŪLEHUNUI
REGIONAL
INFRASTRUCTURE

AUSTIN, TSUTSUMI & ASSOC., INC.
ENGINEERS, SUVEYORS • HONOLULU, HAWAII

BRYAN H. KOBA
LICENSED PROFESSIONAL ENGINEER
No. 14948
HAWAII U.S.A.

This work was prepared by me or under my supervision and construction of this project will be under my observation. (Observation of construction as defined in Chapter 16-115 Subchapter 1 Definitions of the Hawaii Administrative Rules "Professional Engineers, Architects, Surveyors, and Landscape Architects.")

SIGNATURE — APRIL 30, 2020 EXP. DATE OF THE LICENSE

0 1 2
LINE IS 2 INCHES AT FULL SIZE
(If NOT 2-inches : Scale Accordingly)

REVISION	DATE	BRIEF	BY

Project No:	16-576
Scale:	AS NOTED
Date:	1/31/2020
Designed By:	BHK
Drawn By:	BHK
Checked By:	

HEADWORKS SECTIONS – 1

DWG. NO.

MB-3

SHEET 93 OF 201

FILE	POCKET	FOLDER	NO.

JOB NO. O-11-056.004
FN: C:\PROJECT FOLDER\16-576 DHHL PROJECT\ENGINEERING\DWG\CONSTRUCTION DRAWING SET\MB-3 HEADWORKS SECTIONS 1.DWG

ITEM	DESCRIPTION
1	10"x4" WYE, DI, MJ
2	10" SPOOL, DI, L=4'-0", PE
3	10" WALL SPOOL, DI, FExMJ
4	10" SPOOL, DI, LENGTH TO SUIT, FExPE
5	10" FLANGE COUPLING ADAPTER
6	10" SPOOL, DI, L-12". FExFE
7	10" SPOOL, DE, LENGTH TO SUIT, PE
8	10"x6" WYE, DI, MJ
9	10" 1/4 BEND, DI, MJ
10	10" 1/4 BEND, DI, FE
11	14"x10" TEE, DI, MJ
12	14" FLANGE COUPLING ADAPTER
13	14" SPOOL, DI, LENGTH TO SUIT, FExPE
14	14" 1/4 BEND, DI, FE
15	16" SPOOL, DI, LENGTH TO SUIT, FE
16	16" 1/4 BEND, DI, FE
17	20"x16" TEE, DI, FE
18	6"x4" REDUCER, DI, FE
19	6" 1/8" BEND, DE, FE
20	6" SPOOL, LENGTH TO SUIT, FExPE
21	6" 1/4" BEND, DE, FE
22	6" EBAA 1000 E-Z FLANGE ADAPTER OR EQUAL
23	6" MEGAFLANGE 2100 OR EQUAL
24	8"x6" TEE, DI, FE
25	6" SPOOL, DI, L=1'-3", FE

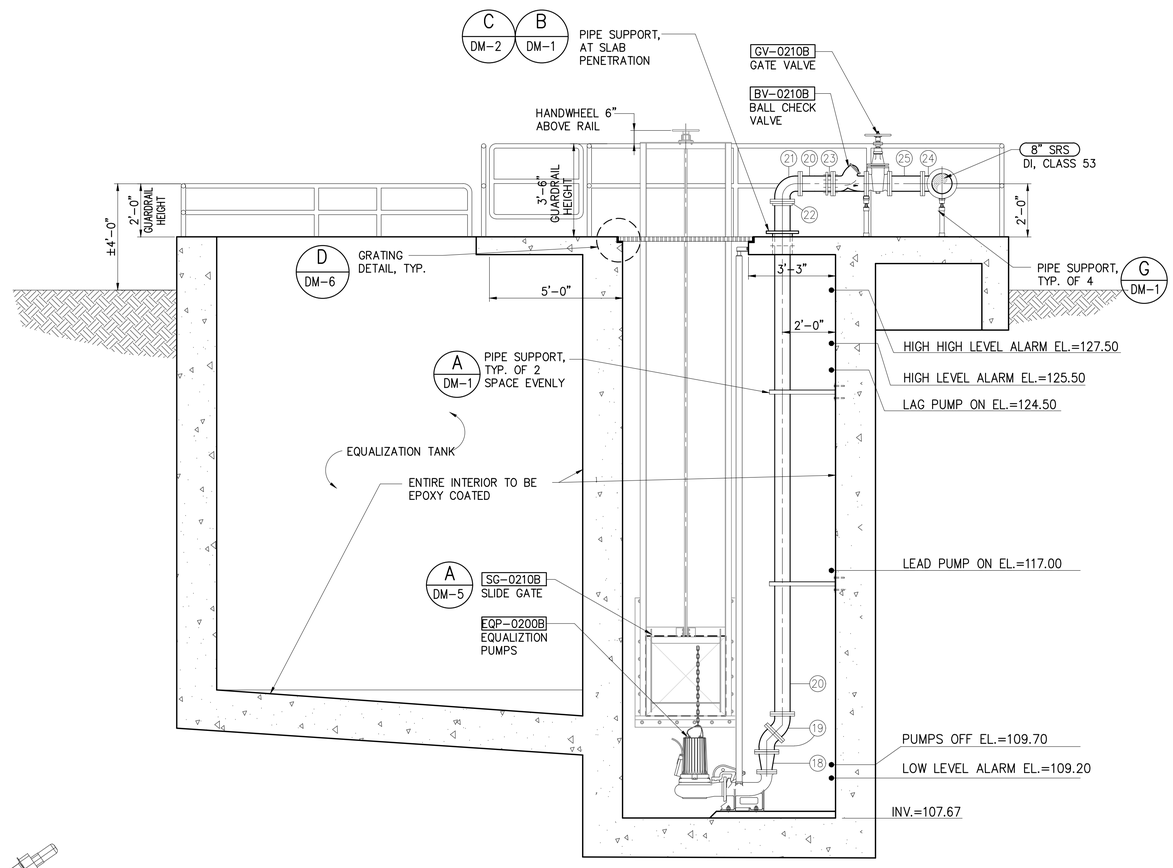

SECTION 3 / MB-4
SCALE: 3/8"=1'-0"

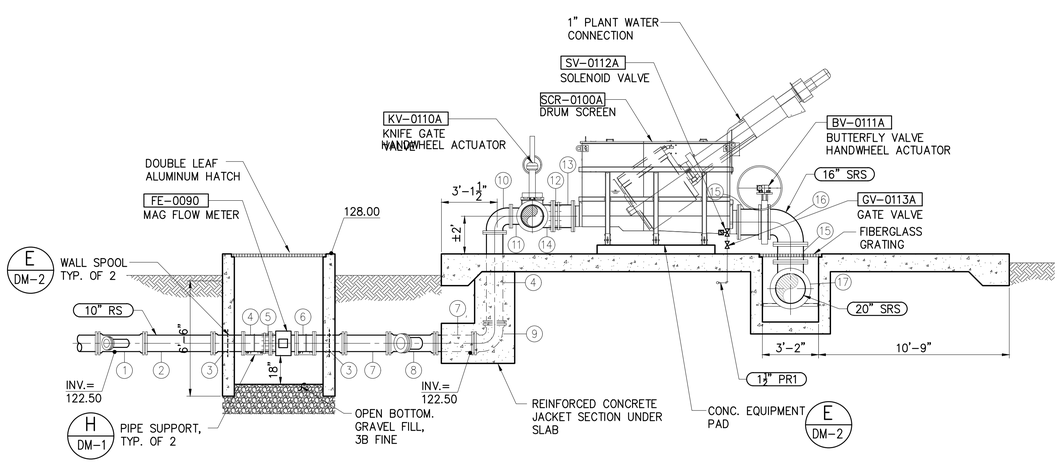

SECTION 2 / MB-4
SCALE: 1/4"=1'-0"

AustinTsutsumi & ASSOCIATES, INC.
CIVIL ENGINEERS I SURVEYORS
HONOLULU I WAILUKU I HILO, HAWAII
501 SUMNER STREET, SUITE 521
HONOLULU, HAWAII 96817
PHONE: 808-533-3646
FAX: 808-526-1267

STATE OF HAWAII
DEPARTMENT OF HAWAIIAN HOME LANDS

PŪLEHUNUI REGIONAL INFRASTRUCTURE

AUSTIN, TSUTSUMI & ASSOC., INC.
ENGINEERS, SUVEYORS • HONOLULU, HAWAII

BRYAN H. KOBA
LICENSED PROFESSIONAL ENGINEER
No. 14948
HAWAII U.S.A.

This work was prepared by me or under my supervision and construction of this project will be under my observation. (Observation of construction as defined in Chapter 16-115 Subchapter 1 Definitions of the Hawaii Administrative Rules "Professional Engineers, Architects, Surveyors, and Landscape Architects.")

SIGNATURE — APRIL 30, 2020 EXP. DATE OF THE LICENSE

0 1 2
LINE IS 2 INCHES AT FULL SIZE
(If NOT 2-inches : Scale Accordingly)

REVISION	DATE	BRIEF	BY

Project No:	16-576
Scale:	AS NOTED
Date:	1/31/2020
Designed By:	BHK
Drawn By:	BHK
Checked By:	

HEADWORKS SECTIONS - 2

DWG. NO.
MB-4

SHEET 94 OF 201

FILE	POCKET	FOLDER	NO.

JOB NO. 0-11-056.004
FN: C:\PROJECT FOLDER\16-576 DHHL PROJECT\ENGINEERING\DWG\CONSTRUCTION DRAWING SET\MB-4 HEADWORKS SECTIONS 2.DWG

ITEM	DESCRIPTION
1	6" BLIND FLANGE, DI
2	6"x4" TEE, DI, FE
3	6" SPOOL, DI, LENGTH TO SUIT, FExPE
4	6" WALL SPOOL
5	6" 1/8 BEND, DI, FE
6	6" 1/4 BEND, DI, FE
7	6" 1/4 BEND, DI, MJ
8	4" 1/4 BEND, DI, FE
9	4" SPOOL, DI, L=12", FE
10	4" 1/8 BEND, DI, FE
11	4 SPOOL, DI, LENGTH TO SUIT, FE
12	4" FLANGED FLARE, DI, FE
13	4"x3" CONCENTRIC REDUCER, DI, FE
14	EBAA 1000 E-Z FLANGE ADAPTER, EPDM GASKETS

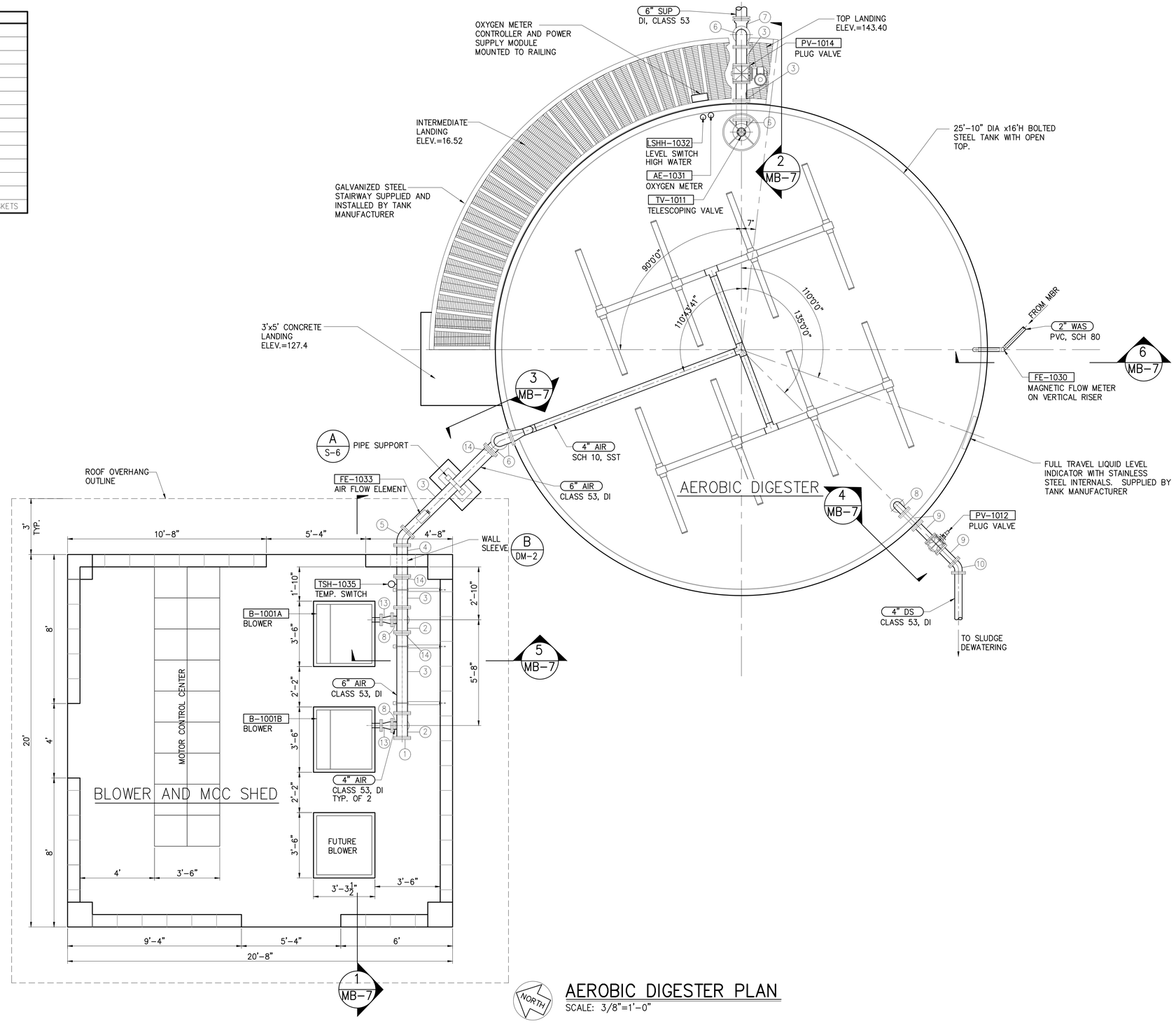

AEROBIC DIGESTER PLAN

SCALE: 3/8"=1'-0"

AustinTsutsumi & ASSOCIATES, INC.
CIVIL ENGINEERS I SURVEYORS
HONOLULU I WAILUKU I HILO, HAWAII

501 SUMNER STREET, SUITE 521
HONOLULU, HAWAII 96817

PHONE: 808-533-3646
FAX: 808-526-1267

STATE OF HAWAII
DEPARTMENT OF HAWAIIAN HOME LANDS

PŪLEHUNUI REGIONAL INFRASTRUCTURE

AUSTIN, TSUTSUMI & ASSOC., INC.
ENGINEERS, SUVEYORS • HONOLULU, HAWAII

BRYAN H. KOBA
LICENSED PROFESSIONAL ENGINEER
No. 14948
HAWAII U.S.A.

This work was prepared by me or under my supervision and construction of this project will be under my observation. (Observation of construction as defined in Chapter 16-115 Subchapter 1 Definitions of the Hawaii Administrative Rules "Professional Engineers, Architects, Surveyors, and Landscape Architects.")

SIGNATURE — APRIL 30, 2020 — EXP. DATE OF THE LICENSE

0 1 2
LINE IS 2 INCHES AT FULL SIZE
(If NOT 2-inches : Scale Accordingly)

REVISION	DATE	BRIEF	BY

Project No:	16-576
Scale:	AS NOTED
Date:	1/31/2020
Designed By:	BHK
Drawn By:	BHK
Checked By:	

AEROBIC DIGESTER PLAN

DWG. NO.
MB-5

SHEET 95 OF 201

FILE	POCKET	FOLDER	NO.

JOB NO. 0-11-056.004
FN: C:\PROJECT FOLDER\16-576 DHHL PROJECT\ENGINEERING\DWG\CONSTRUCTION DRAWING SET\MB-5 AEROBIC DIGESTER PLAN.DWG

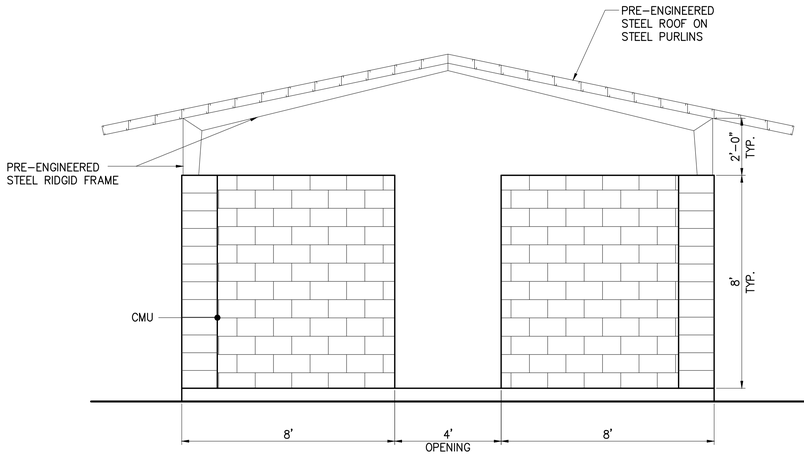

NORTH SHED ELEVATION

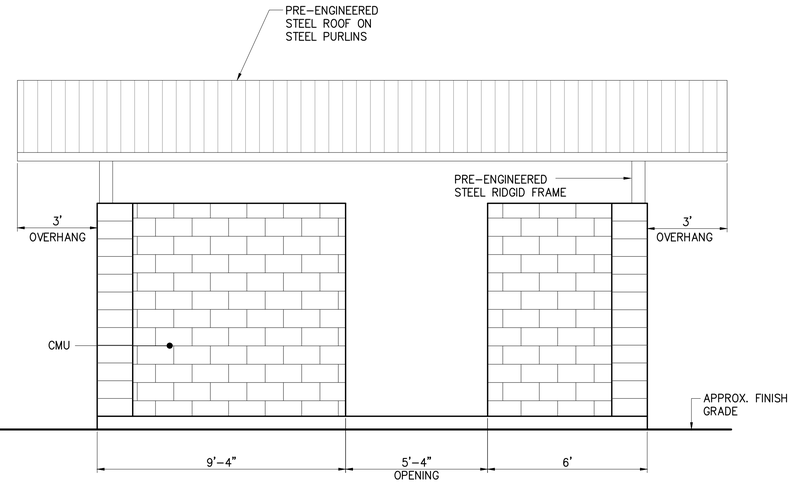

WEST SHED ELEVATION

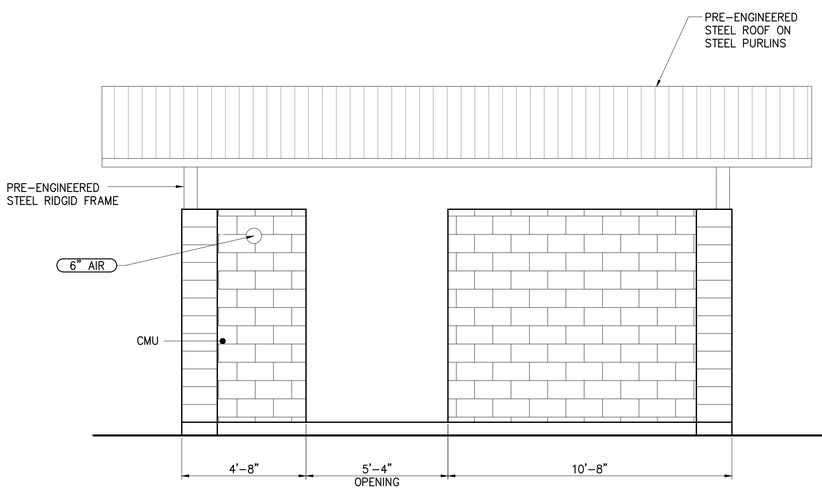

EAST SHED ELEVATION

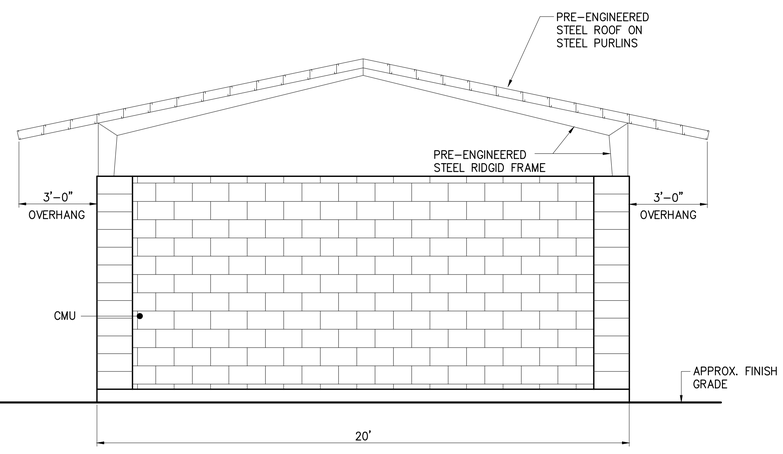

SOUTH SHED ELEVATION

BLOWER AND MCC SHED ELEVATIONS

SCALE: 3/8"=1'-0"

AustinTsutsumi
& ASSOCIATES, INC.
CIVIL ENGINEERS I SURVEYORS
HONOLULU I WAILUKU I HILO, HAWAII

501 SUMNER STREET, SUITE 521
HONOLULU, HAWAII 96817

PHONE: 808-533-3646
FAX: 808-526-1267

STATE OF HAWAII
DEPARTMENT OF
HAWAIIAN HOME LANDS

PŪLEHUNUI
REGIONAL
INFRASTRUCTURE

AUSTIN, TSUTSUMI & ASSOC., INC.
ENGINEERS, SUVEYORS • HONOLULU, HAWAII

BRYAN H. KOBA
LICENSED
PROFESSIONAL
ENGINEER
No. 14948
HAWAII U.S.A.

This work was prepared by me or under my supervision and construction of this project will be under my observation. (Observation of construction as defined in Chapter 16-115 Subchapter 1 Definitions of the Hawaii Administrative Rules "Professional Engineers, Architects, Surveyors, and Landscape Architects.")

SIGNATURE APRIL 30, 2020
EXP. DATE OF THE LICENSE

0 1 2
LINE IS 2 INCHES AT FULL SIZE
(If NOT 2-inches : Scale Accordingly)

REVISION	DATE	BRIEF	BY

Project No:	16-576
Scale:	AS NOTED
Date:	1/31/2020
Designed By:	BHK
Drawn By:	BHK
Checked By:	

BLOWER AND MCC SHED
ELEVATIONS

DWG. NO.
MB-6

SHEET 96 OF 201

FILE	POCKET	FOLDER	NO.

JOB NO. 0-11-056.004
FN: C:\PROJECT FOLDER\16-576 DHHL PROJECT\ENGINEERING\DWG\CONSTRUCTION DRAWING SET\MB-6 BLOWER AND MCC SHED ELEVATIONS.DWG

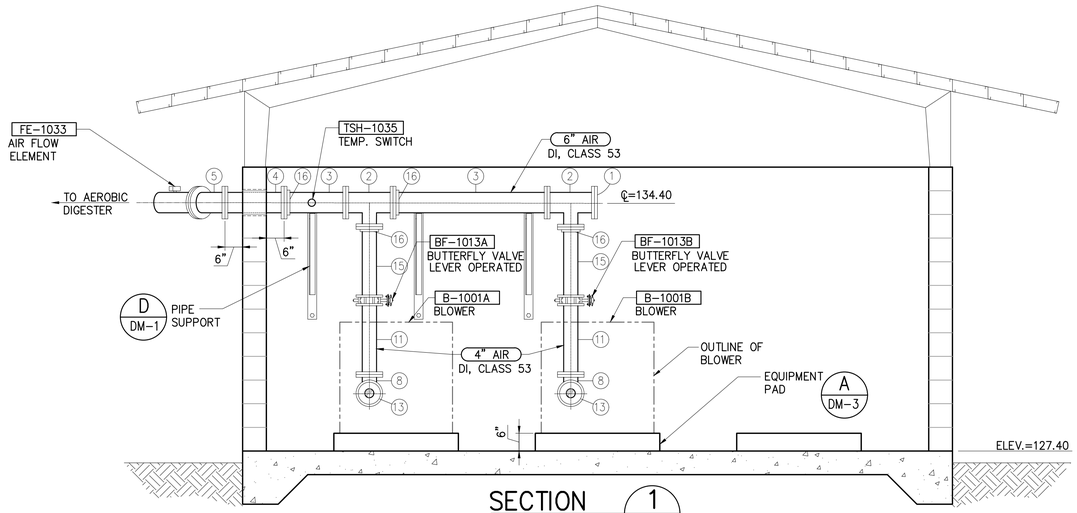

SECTION 1 / MB-7
SCALE: 1/2"=1'-0"

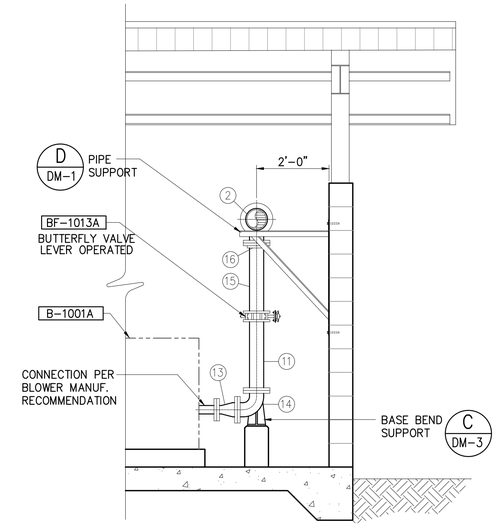

SECTION 5 / MB-7
SCALE: 1/2"=1'-0"

ITEM	DESCRIPTION
1	6" BLIND FLANGE, DI
2	6"x4" TEE, DI, FE
3	6" SPOOL, DI, LENGTH TO SUIT, FExPE
4	6" WALL SPOOL, FExPE
5	6" 1/8 BEND, DI, FE
6	6" 1/4 BEND, DI, FE
7	6" 1/4 BEND, DI, MJ
8	4" 1/4 BEND, DI, FE
9	4" SPOOL, DI, L=12", FE
10	4" 1/8 BEND, DI, FE
11	4 SPOOL, DI, L=2'-0", FE
12	4" FLANGED FLARE, DI, FE
13	4"x3" CONCENTRIC REDUCER, DI, FE
14	4" BASE ELBOW, DI, FE
15	4 SPOOL, DI, LENGTH TO SUIT, FExPE
16	EBAA 1000 E-Z FLANGE ADAPTER, EPDM GASKETS
17	6" BASE ELBOW, DI, FE
18	6" SPOOL, DI, L=12", FE

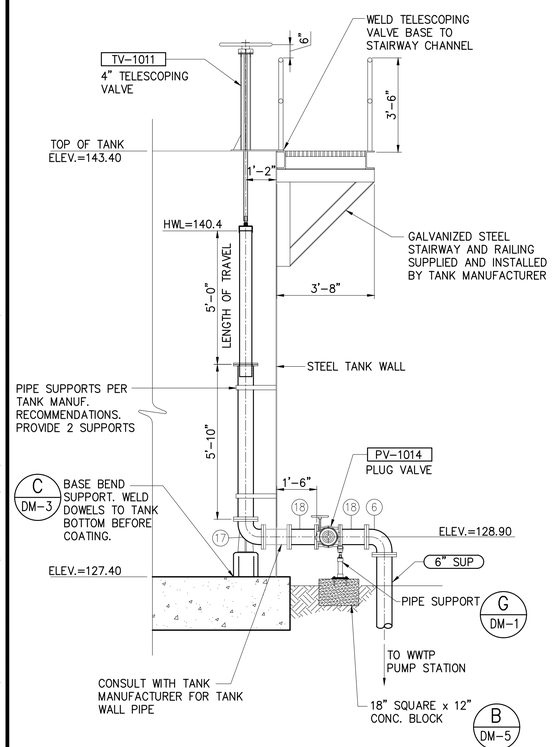

SECTION 2 / MB-7
SCALE: 1/2"=1'-0"

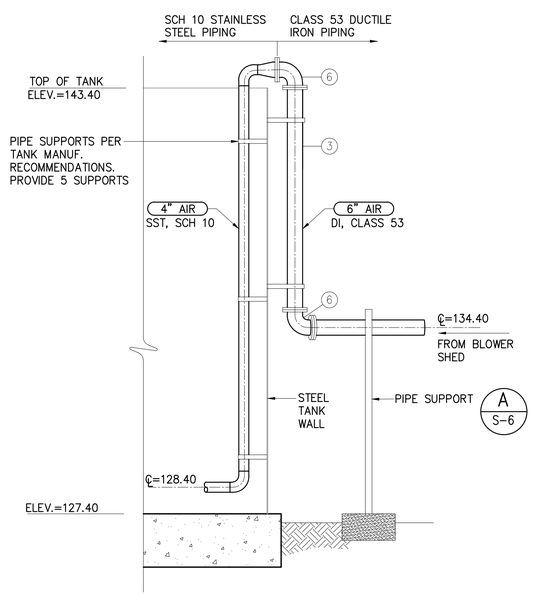

SECTION 3 / MB-7
SCALE: 1/2"=1'-0"

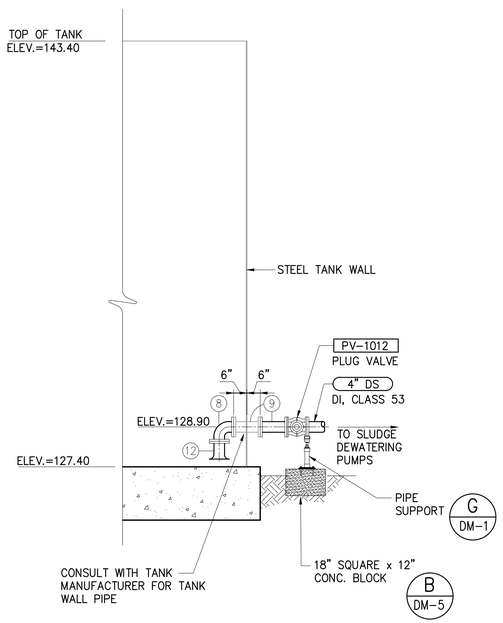

SECTION 4 / MB-7
SCALE: 1/2"=1'-0"

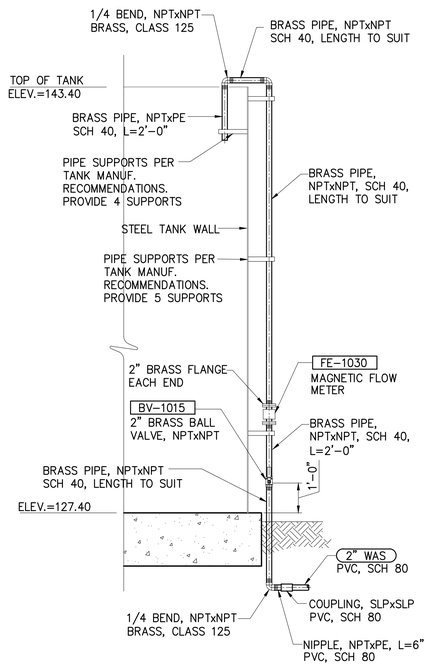

SECTION 6 / MB-7
SCALE: 1/2"=1'-0"

AUSTIN, TSUTSUMI & ASSOCIATES, INC.
CIVIL ENGINEERS I SURVEYORS
HONOLULU I WAILUKU I HILO, HAWAII

501 SUMNER STREET, SUITE 521
HONOLULU, HAWAII 96817

PHONE: 808-533-3646
FAX: 808-526-1267

STATE OF HAWAII
DEPARTMENT OF HAWAIIAN HOME LANDS

PŪLEHUNUI REGIONAL INFRASTRUCTURE

AUSTIN, TSUTSUMI & ASSOC., INC.
ENGINEERS, SUVEYORS • HONOLULU, HAWAII

BRYAN H. KOBA
LICENSED PROFESSIONAL ENGINEER
No. 14948
HAWAII U.S.A.

This work was prepared by me or under my supervision and construction of this project will be under my observation. (Observation of construction as defined in Chapter 16-115 Subchapter 1 Definitions of the Hawaii Administrative Rules "Professional Engineers, Architects, Surveyors, and Landscape Architects.")

SIGNATURE — APRIL 30, 2020 — EXP. DATE OF THE LICENSE

0 1 2
LINE IS 2 INCHES AT FULL SIZE
(If NOT 2-inches : Scale Accordingly)

REVISION	DATE	BRIEF	BY

Project No:	16-576
Scale:	AS NOTED
Date:	1/31/2020
Designed By:	BHK
Drawn By:	BHK
Checked By:	

AEROBIC DIGESTER SECTIONS

DWG. NO.
MB-7

SHEET 97 OF 201

FILE	POCKET	FOLDER	NO.

JOB NO. Q-11-056.004
FN: C:\PROJECT FOLDER\16-576 DHHL PROJECT\ENGINEERING\DWG\CONSTRUCTION DRAWING SET\MB-7 AEROBIC DIGESTER SECTIONS.DWG

ITEM	DESCRIPTION
1	3"x2" REDUCING ELBOW, DI, FE
2	3" SPOOL, DI, LENGTH TO SUIT, FExPE
3	3" MEGAFLANGE 2100
4	3" BLIND FLANGE, DI
5	3" TEE, DI, FE
6	3" SPOOL, DI, L=9", FE
7	3" 1/4 BEND, DI, FE
8	3" 1/4 BEND, DI, MJ
9	4" 1/4 BEND, DI, MJ
10	4" SPOOL, DI, LENGTH TO SUIT, PE
11	4"x3" WYE, DI, MJ
12	4"x3" TEE, DI, FE
13	4" SPOOL, DI, LENGTH TO SUIT, FExPE
14	4" MEGAFLANGE 2100
15	4" BLIND FLANGE, FE
16	3" SPOOL, DI, L=2'-0", FE
17	3" SPOOL, DI, LENGTH TO SUIT, FE

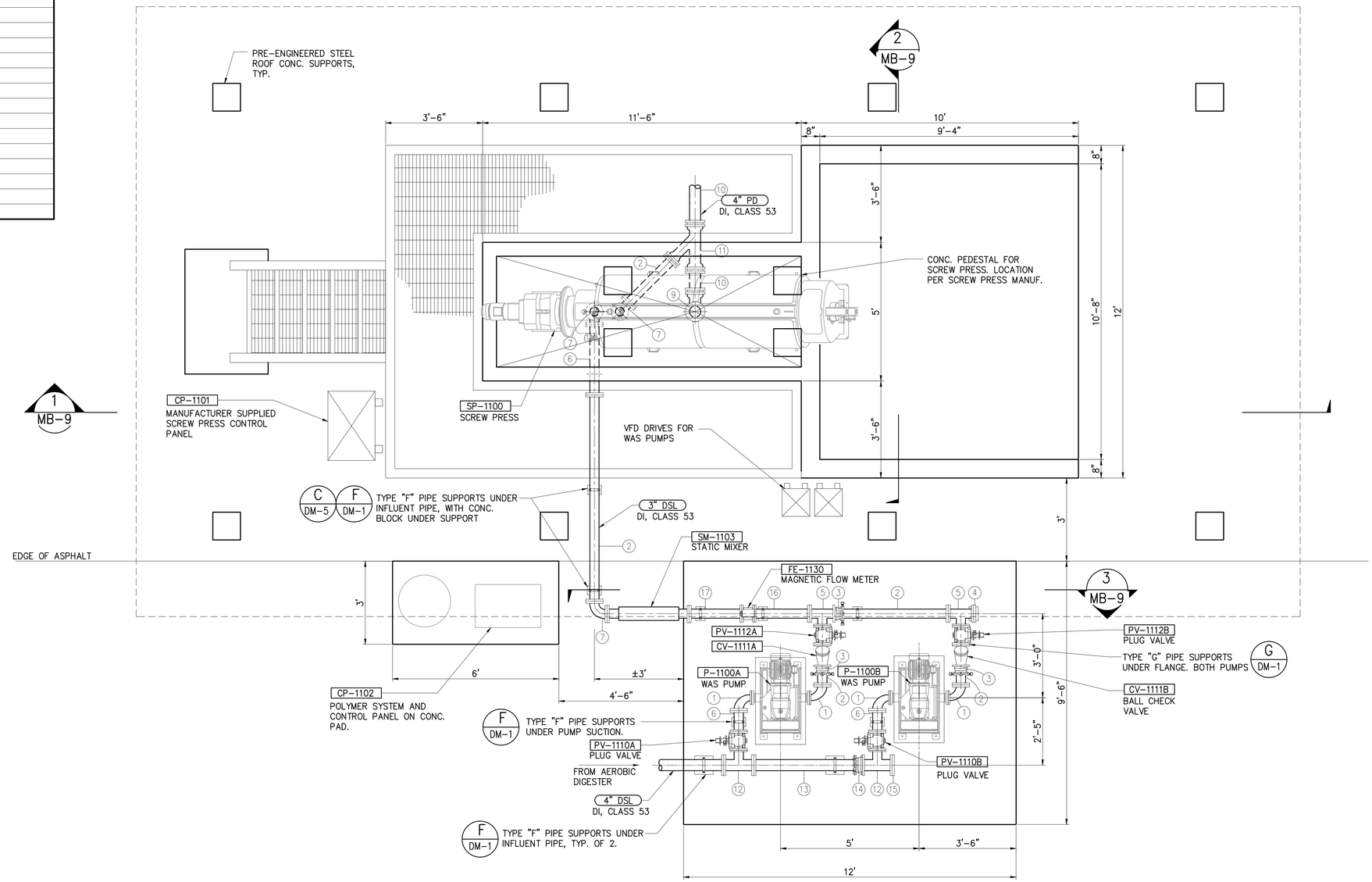

EQUIPMENT NO.	PUMP MANUF.	NO. OF UNITS	TYPE	MODEL NO.	FLOW, GPM	TDH. FT	Hp	VAC	PHASE	FREQUENCY
P-1100 A/B	BORGER	TWO (2)	ROTARY LOBE	AL 25	7 - 25	10	2	480	3	60Hz

NORTH

SLUDGE DEWATERING PLAN

SCALE: 1/4"=1'-0"

JOB NO. O-11-056.004
FN: C:\PROJECT FOLDER\16-576 DHHL PROJECT\ENGINEERING\DWG\CONSTRUCTION DRAWING SET\MB-8 SLUDGE DEWATERING PLAN.DWG

AustinTsutsumi & ASSOCIATES, INC.
CIVIL ENGINEERS I SURVEYORS
HONOLULU I WAILUKU I HILO, HAWAII

501 SUMNER STREET, SUITE 521
HONOLULU, HAWAII 96817

PHONE: 808-533-3646
FAX: 808-526-1267

STATE OF HAWAII
DEPARTMENT OF
HAWAIIAN HOME LANDS

PŪLEHUNUI
REGIONAL
INFRASTRUCTURE

AUSTIN, TSUTSUMI & ASSOC., INC.
ENGINEERS, SUVEYORS • HONOLULU, HAWAII

BRYAN H. KOBA
LICENSED PROFESSIONAL ENGINEER
No. 14948
HAWAII U.S.A.

This work was prepared by me or under my supervision and construction of this project will be under my observation. (Observation of construction as defined in Chapter 16-115 Subchapter 1 Definitions of the Hawaii Administrative Rules "Professional Engineers, Architects, Surveyors, and Landscape Architects.")

SIGNATURE — APRIL 30, 2020 EXP. DATE OF THE LICENSE

0 1 2
LINE IS 2 INCHES AT FULL SIZE
(If NOT 2-inches : Scale Accordingly)

REVISION	DATE	BRIEF	BY

Project No:	16-576
Scale:	AS NOTED
Date:	1/31/2020
Designed By:	BHK
Drawn By:	BHK
Checked By:	

SLUDGE DEWATERING PLAN

DWG. NO.
MB-8

FILE	POCKET	FOLDER	NO.

ITEM	DESCRIPTION
1	3"x2" REDUCING ELBOW, DI, FE
2	3" SPOOL, DI, LENGTH TO SUIT, FExPE
3	3" MEGAFLANGE 2100
4	3" BLIND FLANGE, DI
5	3" TEE, DI, FE
6	3" SPOOL, DI, L=2'-0", FE
7	3" 1/4 BEND, DI, FE
8	3" 1/4 BEND, DI, MJ
9	4" 1/4 BEND, DI, MJ
10	4" SPOOL, DI, LENGTH TO SUIT, PE
11	4"x3" WYE, DI, MJ
12	4"x3" TEE, DI, FE
13	4" SPOOL, DI, LENGTH TO SUIT, FExPE
14	4" RESTRAINED FLANGE COUPLING ADAPTER
15	4" BLIND FLANGE, FE
16	4" SPOOL, DI, LENGTH TO SUIT, PE
17	3" SPOOL, DI, LENGTH TO SUIT, PE
18	4" COUPLING
19	4" BRASS SPOOL, L=12", PExNPT
20	3" SPOOL, DI, LENGTH TO SUIT, FE

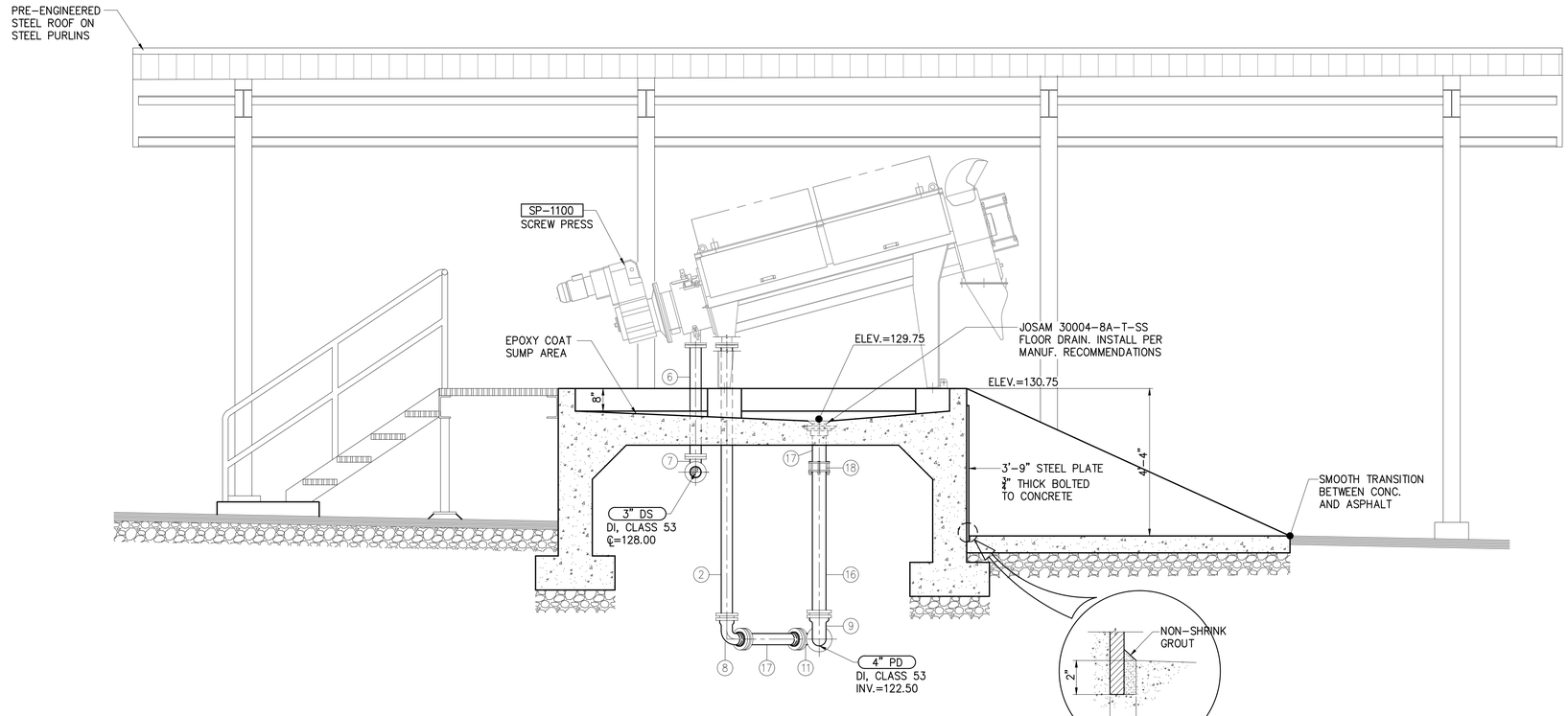

SECTION 1 / MB-9
SCALE: 1/2"=1'-0"

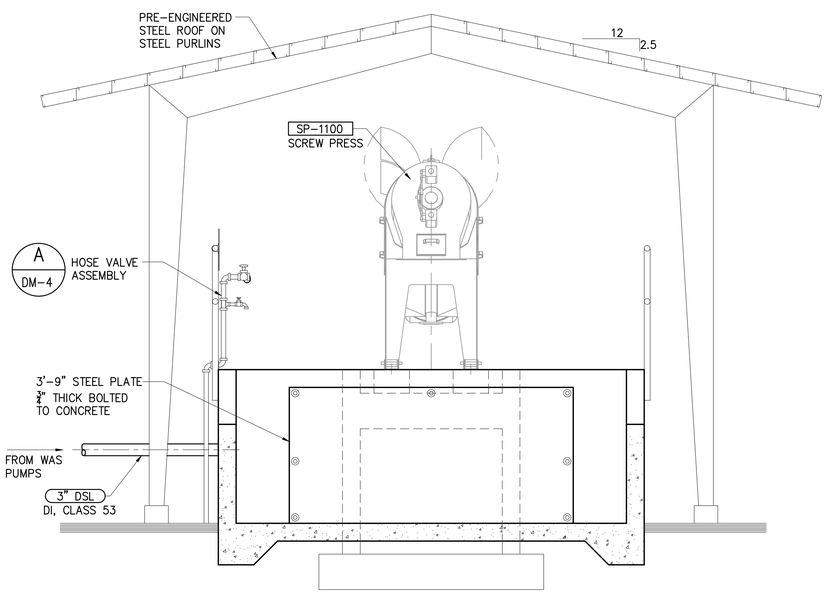

SECTION 2 / MB-9
SCALE: 1/2"=1'-0"

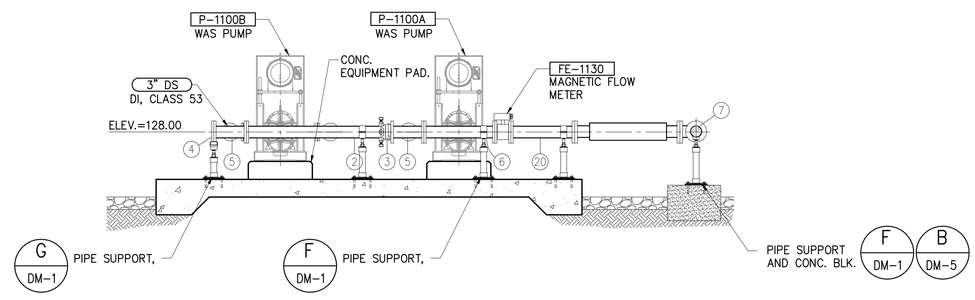

SECTION 3 / MB-9
SCALE: 1/2"=1'-0"

AustinTsutsumi & ASSOCIATES, INC.
CIVIL ENGINEERS I SURVEYORS
HONOLULU I WAILUKU I HILO, HAWAII
501 SUMNER STREET, SUITE 521
HONOLULU, HAWAII 96817
PHONE: 808-533-3646
FAX: 808-526-1267

STATE OF HAWAII
DEPARTMENT OF
HAWAIIAN HOME LANDS

PŪLEHUNUI
REGIONAL
INFRASTRUCTURE

AUSTIN, TSUTSUMI & ASSOC., INC.
ENGINEERS, SUVEYORS • HONOLULU, HAWAII

BRYAN H. KOBA
LICENSED PROFESSIONAL ENGINEER
No. 14948
HAWAII U.S.A.

This work was prepared by me or under my supervision and construction of this project will be under my observation. (Observation of construction as defined in Chapter 16-115 Subchapter 1 Definitions of the Hawaii Administrative Rules "Professional Engineers, Architects, Surveyors, and Landscape Architects.")

SIGNATURE APRIL 30, 2020
EXP. DATE OF THE LICENSE

0 1 2
LINE IS 2 INCHES AT FULL SIZE
(If NOT 2-inches : Scale Accordingly)

REVISION	DATE	BRIEF	BY

Project No:	16-576
Scale:	AS NOTED
Date:	1/31/2020
Designed By:	BHK
Drawn By:	BHK
Checked By:	

SLUDGE DEWATERING SECTIONS

DWG. NO.
MB-9

FILE	POCKET	FOLDER	NO.

JOB NO. O-11-056.004
FN: C:\PROJECT FOLDER\16-576 DHHL PROJECT\ENGINEERING\DWG\CONSTRUCTION DRAWING SET\MB-9 SLUDGE DEWATERING SECTIONS.DWG

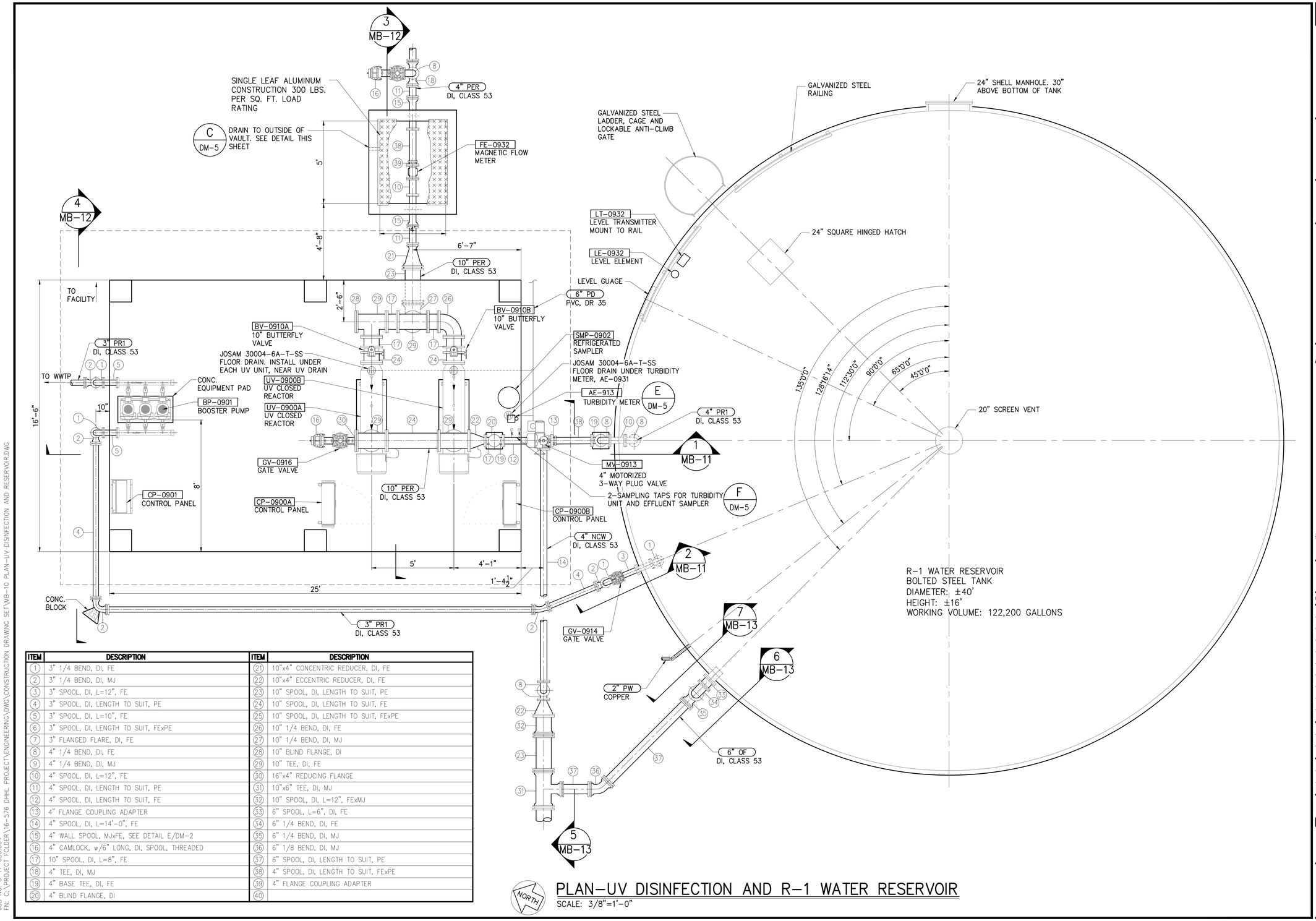

ITEM	DESCRIPTION	ITEM	DESCRIPTION
1	3" 1/4 BEND, DI, FE	21	10"x4" CONCENTRIC REDUCER, DI, FE
2	3" 1/4 BEND, DI, MJ	22	10"x4" ECCENTRIC REDUCER, DI, FE
3	3" SPOOL, DI, L=12", FE	23	10" SPOOL, DI, LENGTH TO SUIT, PE
4	3" SPOOL, DI, LENGTH TO SUIT, PE	24	10" SPOOL, DI, LENGTH TO SUIT, FE
5	3" SPOOL, DI, L=10", FE	25	10" SPOOL, DI, LENGTH TO SUIT, FExPE
6	3" SPOOL, DI, LENGTH TO SUIT, FExPE	26	10" 1/4 BEND, DI, FE
7	3" FLANGED FLARE, DI, FE	27	10" 1/4 BEND, DI, MJ
8	4" 1/4 BEND, DI, FE	28	10" BLIND FLANGE, DI
9	4" 1/4 BEND, DI, MJ	29	10" TEE, DI, FE
10	4" SPOOL, DI, L=12", FE	30	16"x4" REDUCING FLANGE
11	4" SPOOL, DI, LENGTH TO SUIT, PE	31	10"x6" TEE, DI, MJ
12	4" SPOOL, DI, LENGTH TO SUIT, FE	32	10" SPOOL, DI, L=12", FExMJ
13	4" FLANGE COUPLING ADAPTER	33	6" SPOOL, L=6", DI, FE
14	4" SPOOL, DI, L=14'-0", FE	34	6" 1/4 BEND, DI, FE
15	4" WALL SPOOL, MJxFE, SEE DETAIL E/DM-2	35	6" 1/4 BEND, DI, MJ
16	4" CAMLOCK, w/6" LONG, DI, SPOOL, THREADED	36	6" 1/8 BEND, DI, MJ
17	10" SPOOL, DI, L=8", FE	37	6" SPOOL, DI, LENGTH TO SUIT, PE
18	4" TEE, DI, MJ	38	4" SPOOL, DI, LENGTH TO SUIT, FExPE
19	4" BASE TEE, DI, FE	39	4" FLANGE COUPLING ADAPTER
20	4" BLIND FLANGE, DI	40	

PLAN–UV DISINFECTION AND R–1 WATER RESERVOIR

SCALE: 3/8"=1'-0"

AustinTsutsumi & ASSOCIATES, INC.
CIVIL ENGINEERS I SURVEYORS
HONOLULU I WAILUKU I HILO, HAWAII

501 SUMNER STREET, SUITE 521
HONOLULU, HAWAII 96817

PHONE: 808-533-3646
FAX: 808-526-1267

STATE OF HAWAII
DEPARTMENT OF
HAWAIIAN HOME LANDS

PŪLEHUNUI
REGIONAL
INFRASTRUCTURE

AUSTIN, TSUTSUMI & ASSOC., INC.
ENGINEERS, SUVEYORS • HONOLULU, HAWAII

BRYAN H. KOBA
LICENSED PROFESSIONAL ENGINEER
No. 14948
HAWAII U.S.A.

This work was prepared by me or under my supervision and construction of this project will be under my observation. (Observation of construction as defined in Chapter 16-115 Subchapter 1 Definitions of the Hawaii Administrative Rules "Professional Engineers, Architects, Surveyors, and Landscape Architects.")

SIGNATURE APRIL 30, 2020
EXP. DATE OF THE LICENSE

0 1 2
LINE IS 2 INCHES AT FULL SIZE
(If NOT 2-inches : Scale Accordingly)

REVISION	DATE	BRIEF	BY

Project No:	16-576
Scale:	AS NOTED
Date:	1/31/2020
Designed By:	BHK
Drawn By:	BHK
Checked By:	

PLAN–UV DISINFECTION AND R–1 WATER RESERVOIR

DWG. NO.
MB-10

SHEET 100 OF 201

FILE	POCKET	FOLDER	NO.

JOB NO. 0-11-056.004
FN: C:\PROJECT FOLDER\16-576 DHHL PROJECT\ENGINEERING\DWG\CONSTRUCTION DRAWING SET\MB-10 PLAN-UV DISINFECTION AND RESERVOIR.DWG

ITEM	DESCRIPTION	ITEM	DESCRIPTION
1	3" 1/4 BEND, DI, FE	16	4" CAMLOCK, w/ 6" LONG, DI, SPOOL, FLANGE x THREADED
2	3" 1/4 BEND, DI, MJ	17	4" SPOOL, DI, L=2'-0", FExPE
3	3" SPOOL, DI, L=12", FE	18	4" TEE, DI, MJ
4	3" SPOOL, DI, LENGTH TO SUIT, PE	19	4" BASE TEE, DI, FE
5	3" SPOOL, DI, L=10", FE	20	4" BLIND FLANGE, DI
6	3" SPOOL, DI, LENGTH TO SUIT, FExPE	21	10"x4" CONCENTRIC REDUCER, DI, FE
7	3" FLANGED FLARE, DI, FE	22	10"x4" ECCENTRIC REDUCER, DI, FE
8	4" 1/4 BEND, DI, FE	23	10" SPOOL, DI, LENGTH TO SUIT, PE
9	4" 1/4 BEND, DI, MJ	24	10" SPOOL, DI, L=8", FE
10	NOT USED	25	10" SPOOL, DI, LENGTH TO SUIT, FExPE
11	4" SPOOL, DI, LENGTH TO SUIT, PE	26	10" 1/4 BEND, DI, FE
12	4" SPOOL, DI, LENGTH TO SUIT, FE	27	10" 1/4 BEND, DI, MJ
13	4" SPOOL, DI, LENGTH TO SUIT, FExPE	28	10" BLIND FLANGE, DI
14	4" FLANGE COUPLING ADAPTER	29	10" TEE, DI, FE
15	10" SPOOL, DI, LENGTH TO SUIT, FE	30	16"x4" REDUCING FLANGE

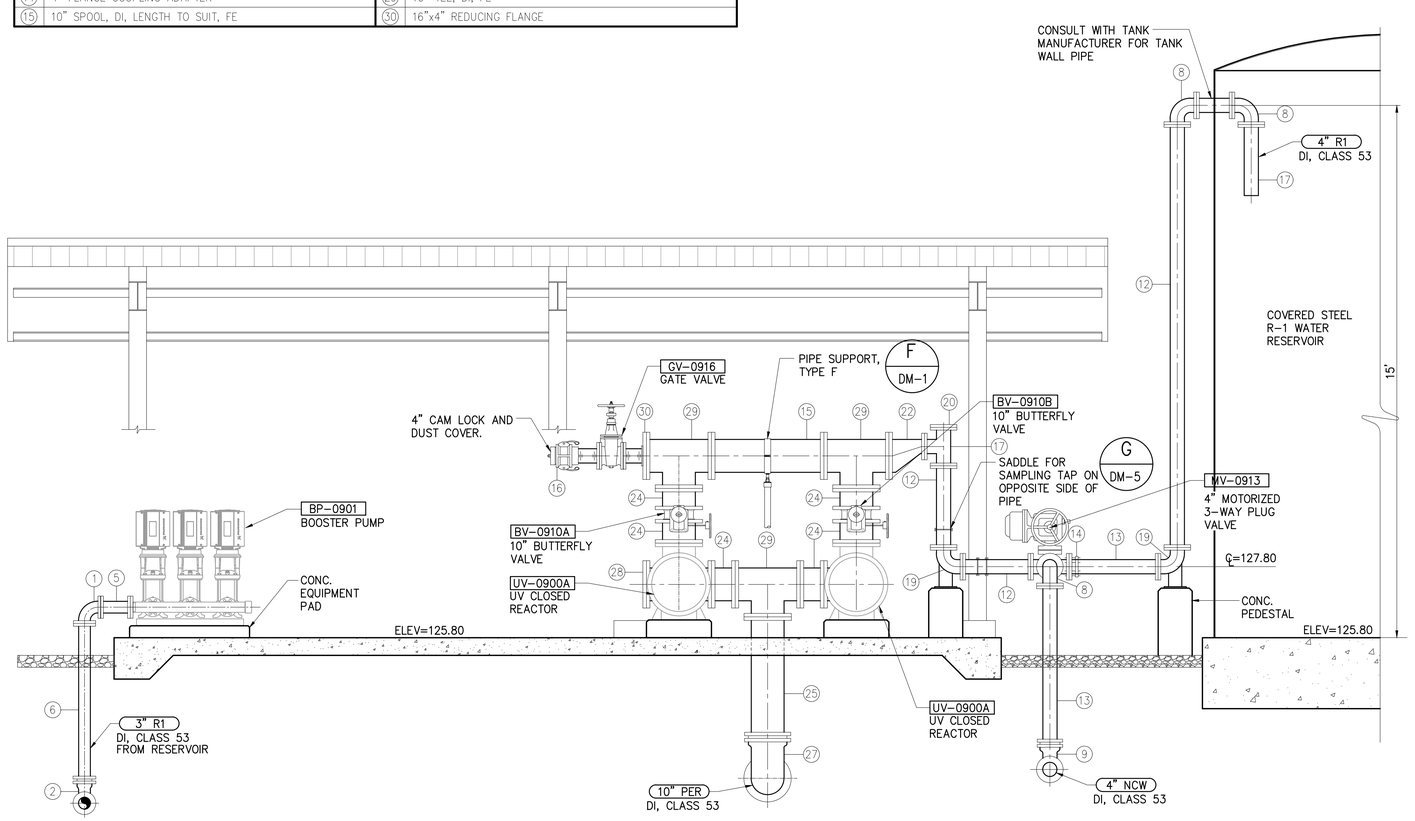

SECTION 1 (MB-11)
SCALE: 1/2"=1'-0"

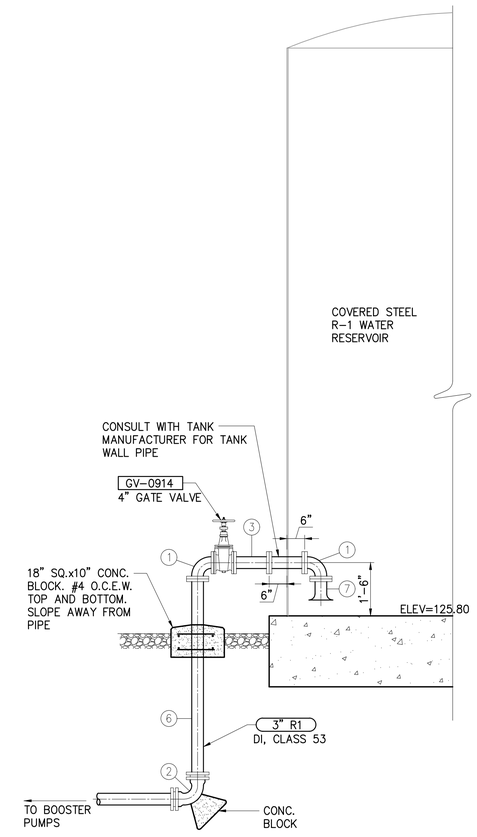

SECTION 2 (MB-11)
SCALE: 1/2"=1'-0"

SECTIONS–UV DISINFECTION AND R–1 WATER RESERVOIR – 1

SCALE: 1/2"=1'-0"

AustinTsutsumi & ASSOCIATES, INC.
CIVIL ENGINEERS I SURVEYORS
HONOLULU I WAILUKU I HILO, HAWAII

501 SUMNER STREET, SUITE 521
HONOLULU, HAWAII 96817

PHONE: 808-533-3646
FAX: 808-526-1267

STATE OF HAWAII
DEPARTMENT OF
HAWAIIAN HOME LANDS

PŪLEHUNUI
REGIONAL
INFRASTRUCTURE

AUSTIN, TSUTSUMI & ASSOC., INC.
ENGINEERS, SUVEYORS • HONOLULU, HAWAII

BRYAN H. KOBA
LICENSED PROFESSIONAL ENGINEER
No. 14948
HAWAII U.S.A.

This work was prepared by me or under my supervision and construction of this project will be under my observation. (Observation of construction as defined in Chapter 16-115 Subchapter 1 Definitions of the Hawaii Administrative Rules "Professional Engineers, Architects, Surveyors, and Landscape Architects.")

SIGNATURE APRIL 30, 2020
EXP. DATE OF THE LICENSE

0 1 2
LINE IS 2 INCHES AT FULL SIZE
(If NOT 2-inches : Scale Accordingly)

REVISION	DATE	BRIEF	BY

Project No:	16-576
Scale:	AS NOTED
Date:	1/31/2020
Designed By:	BHK
Drawn By:	BHK
Checked By:	

SECTIONS–UV
DISINFECTION AND R–1
WATER RESERVOIR – 1

DWG. NO.
MB-11

SHEET 101 OF 201

FILE	POCKET	FOLDER	NO.

JOB NO. O-11-056.004
FN: C:\PROJECT FOLDER\16-576 DHHL PROJECT\ENGINEERING\DWG\CONSTRUCTION DRAWING SET\MB-11 SECTIONS-UV DISINFECTION AND RESERVOIR - 1.DWG

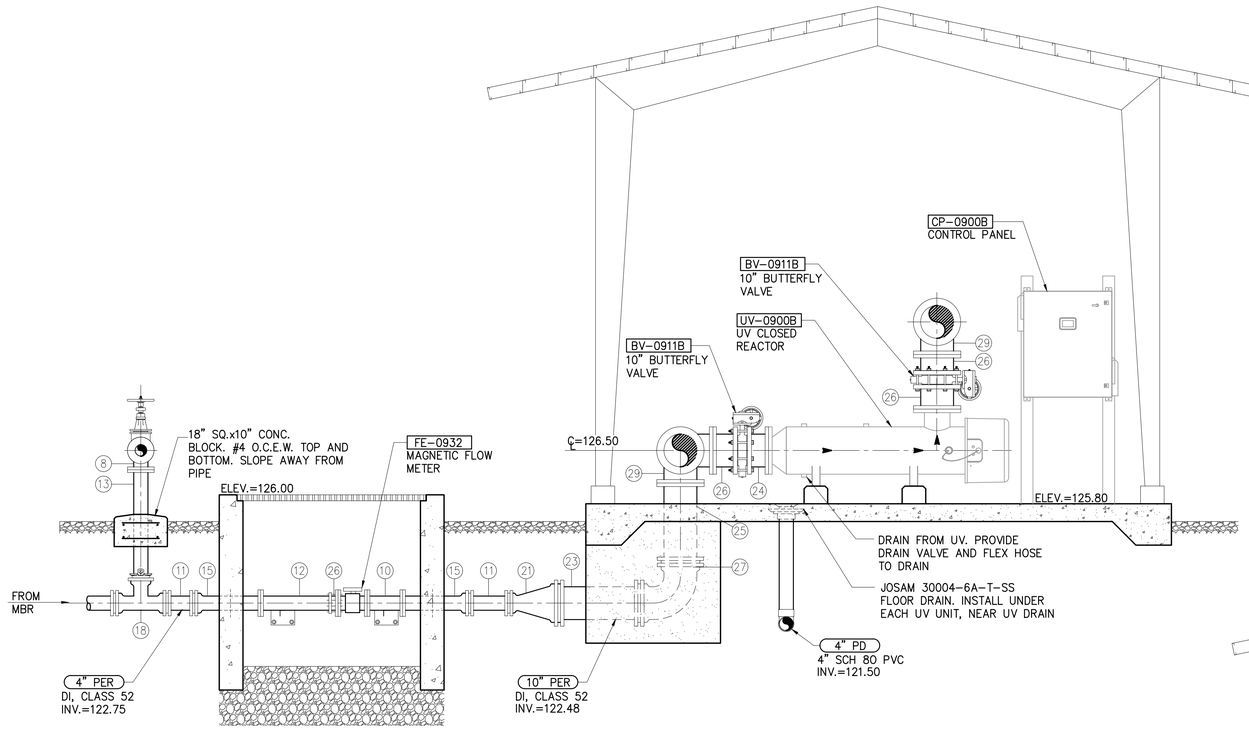

SECTION 3 / MB-12
SCALE: 1/2"=1'-0"

ITEM	DESCRIPTION	ITEM	DESCRIPTION
1	3" 1/4 BEND, DI, FE	16	4" CAMLOCK, w/ 12" LONG, DI, SPOOL, FLANGE x THREADED
2	3" 1/4 BEND, DI, MJ	17	4" TEE, DI, FE
3	3" SPOOL, DI, L=12", FE	18	4" TEE, DI, MJ
4	3" SPOOL, DI, LENGTH TO SUIT, PE	19	4" BASE TEE, DI, FE
5	3" SPOOL, DI, LENGTH TO SUIT, FE	20	4" BLIND FLANGE, DI
6	3" SPOOL, DI, LENGTH TO SUIT, FExPE	21	10"x4" CONCENTRIC REDUCER, DI, FE
7	3" FLANGED FLARE, DI, FE	22	10"x4" ECCENTRIC REDUCER, DI, FE
8	4" 1/4 BEND, DI, FE	23	10" SPOOL, DI, LENGTH TO SUIT, PE
9	4" 1/4 BEND, DI, MJ	24	10" SPOOL, DI, LENGTH TO SUIT, FE
10	4" SPOOL, DI, L=12", FE	25	10" SPOOL, DI, LENGTH TO SUIT, FExPE
11	4" SPOOL, DI, LENGTH TO SUIT, PE	26	10" SPOOL, DI, L-8", FExPE
12	4" SPOOL, DI, LENGTH TO SUIT, FExPE	27	10" 1/4 BEND, DI, MJ
13	4" SPOOL, DI, L=3'-3", FExPE	28	10" BLIND FLANGE, DI
14	4" RESTRAINED FLANGE COUPLING ADAPTER	29	10" TEE, DI, FE
15	4" WALL SPOOL, MJxFE, SEE DETAIL E/DM-2	30	16"x4" REDUCING FLANGE

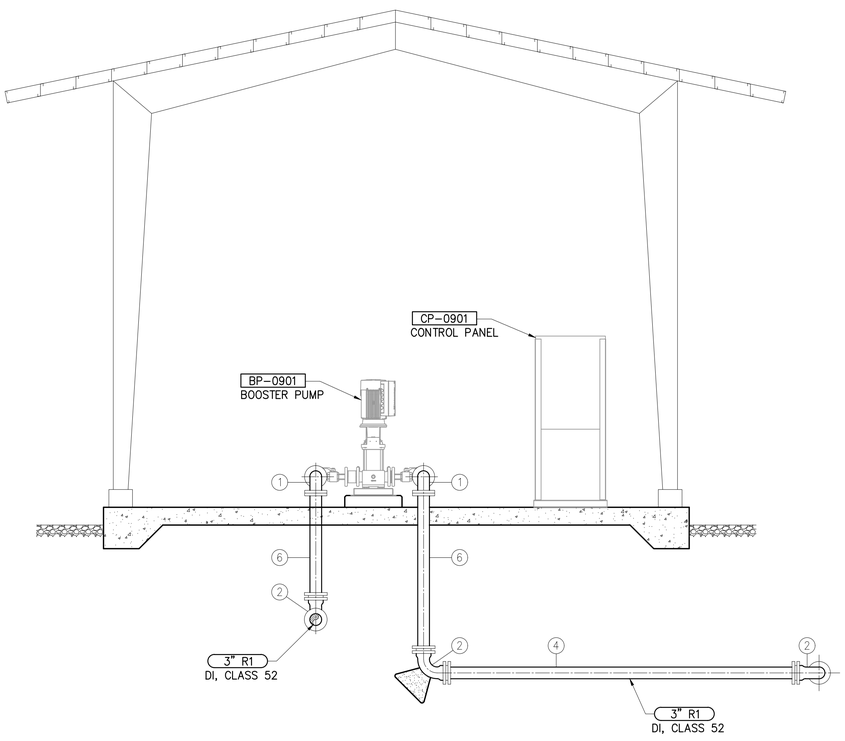

SECTION 4 / MB-12
SCALE: 1/2"=1'-0"

SECTIONS-UV DISINFECTION AND R-1 WATER RESERVOIR - 2
SCALE: 1/2"=1'-0"

AustinTsutsumi & ASSOCIATES, INC.
CIVIL ENGINEERS I SURVEYORS
HONOLULU I WAILUKU I HILO, HAWAII
501 SUMNER STREET, SUITE 521
HONOLULU, HAWAII 96817
PHONE: 808-533-3646
FAX: 808-526-1267

STATE OF HAWAII
DEPARTMENT OF HAWAIIAN HOME LANDS

PŪLEHUNUI REGIONAL INFRASTRUCTURE

AUSTIN, TSUTSUMI & ASSOC., INC.
ENGINEERS, SUVEYORS • HONOLULU, HAWAII

BRYAN H. KOBA
LICENSED PROFESSIONAL ENGINEER
No. 14948
HAWAII U.S.A.

This work was prepared by me or under my supervision and construction of this project will be under my observation. (Observation of construction as defined in Chapter 16-115 Subchapter 1 Definitions of the Hawaii Administrative Rules "Professional Engineers, Architects, Surveyors, and Landscape Architects.")

SIGNATURE — APRIL 30, 2020 — EXP. DATE OF THE LICENSE

0 1 2
LINE IS 2 INCHES AT FULL SIZE
(If NOT 2-inches : Scale Accordingly)

REVISION	DATE	BRIEF	BY

Project No:	16-576
Scale:	AS NOTED
Date:	1/31/2020
Designed By:	BHK
Drawn By:	BHK
Checked By:	

SECTIONS-UV DISINFECTION AND R-1 WATER RESERVOIR - 2

DWG. NO.
MB-12

SHEET 102 OF 201

FILE	POCKET	FOLDER	NO.

JOB NO. O-11-056.004
FN: C:\PROJECT FOLDER\16-576 DHHL PROJECT\ENGINEERING\DWG\CONSTRUCTION DRAWING SET\MB-12 SECTIONS-UV DISINFECTION AND RESERVOIR - 2.DWG

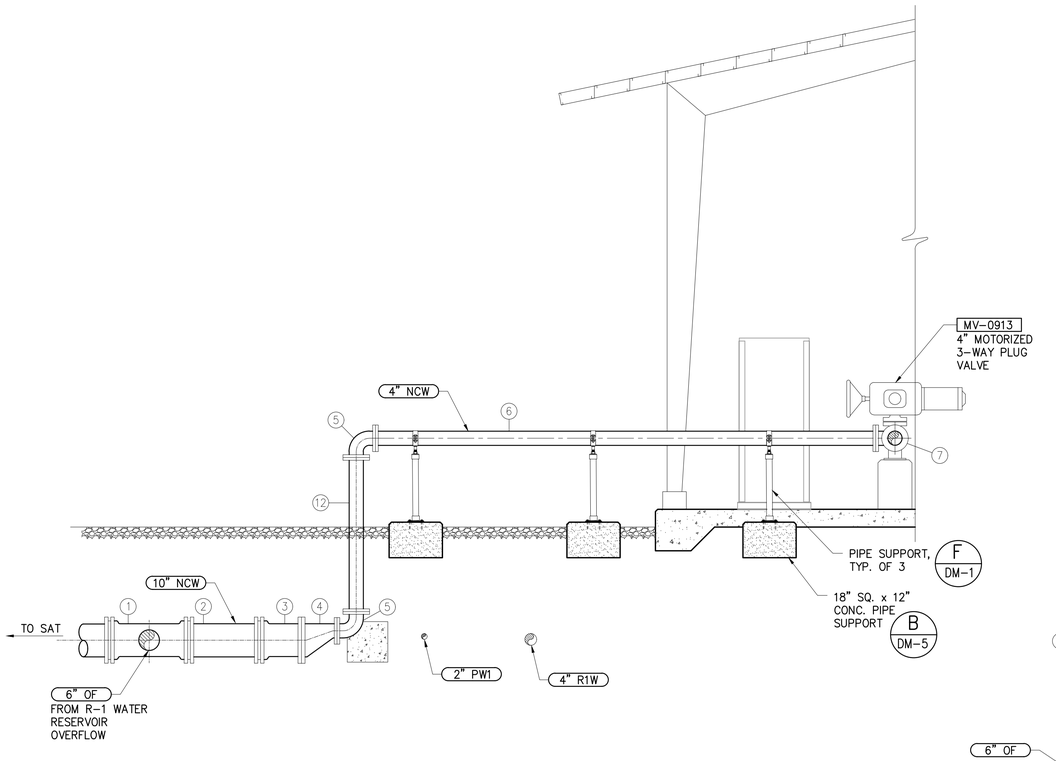

SECTION 5
SCALE: 1/2"=1'-0" MB-13

ITEM	DESCRIPTION
1	10"x6" TEE, DI, MJ
2	10" SPOOL, DI, PE
3	10" SPOOL, DI, L=12", PExMJ
4	10"x4" INCREASER, DI, FE
5	4" 1/4 BEND, DI, FE
6	4" SPOOL, DI, L=14'-0", FE
7	4" TEE, DI, FE
8	6" 1/4 BEND, DI, FE
9	6" SPOOL, L=6", DI, FE
10	6" SPOOL, DI, LENGTH TO SUIT, FExPE
11	6" 1/4 BEND, DI, MJ
12	4" SPOOL, DI, L=4'-4", FE

SECTIONS-UV DISINFECTION AND R-1 WATER RESERVOIR - 3
SCALE: 1/2"=1'-0"

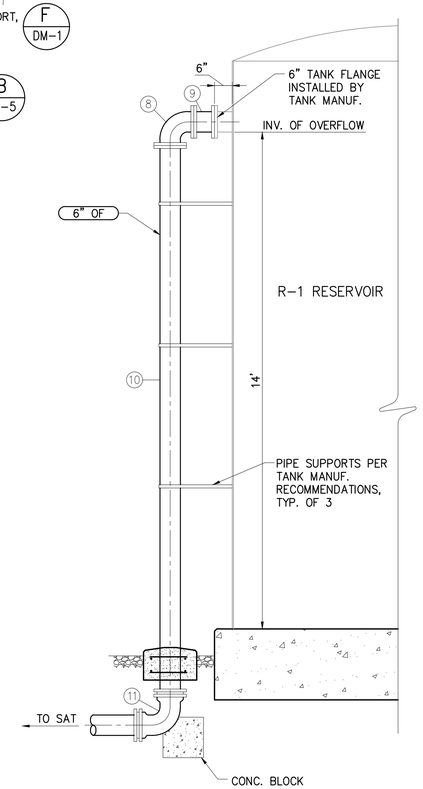

SECTION 6
SCALE: 1/2"=1'-0" MB-13

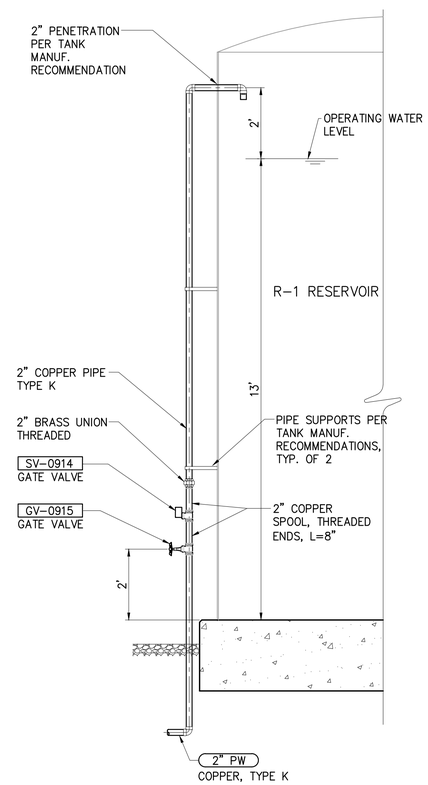

SECTION 7
SCALE: 1/2"=1'-0" MB-13

JOB NO. O-11-056.004
FN: C:\PROJECT FOLDER\16-576 DHHL PROJECT\ENGINEERING\DWG\CONSTRUCTION DRAWING SET\MB-13 SECTIONS-UV DISINFECTION AND RESERVOIR - 3.DWG

AustinTsutsumi
& ASSOCIATES, INC.
CIVIL ENGINEERS I SURVEYORS
HONOLULU I WAILUKU I HILO, HAWAII

501 SUMNER STREET, SUITE 521
HONOLULU, HAWAII 96817

PHONE: 808-533-3646
FAX: 808-526-1267

STATE OF HAWAII
DEPARTMENT OF
HAWAIIAN HOME LANDS

PŪLEHUNUI
REGIONAL
INFRASTRUCTURE

AUSTIN, TSUTSUMI & ASSOC., INC.
ENGINEERS, SUVEYORS • HONOLULU, HAWAII

BRYAN H. KOBA
LICENSED
PROFESSIONAL
ENGINEER
No. 14948
HAWAII U.S.A.

This work was prepared by me or under my supervision and construction of this project will be under my observation. (Observation of construction as defined in Chapter 16-115 Subchapter 1 Definitions of the Hawaii Administrative Rules "Professional Engineers, Architects, Surveyors, and Landscape Architects.")

SIGNATURE APRIL 30, 2020
EXP. DATE OF THE LICENSE

0 1 2
LINE IS 2 INCHES AT FULL SIZE
(If NOT 2-inches : Scale Accordingly)

REVISION	DATE	BRIEF	BY

Project No:	16-576
Scale:	AS NOTED
Date:	1/31/2020
Designed By:	BHK
Drawn By:	BHK
Checked By:	

SECTIONS-UV
DISINFECTION AND R-1
WATER RESERVOIR - 3

DWG. NO.
MB-13

FILE	POCKET	FOLDER	NO.

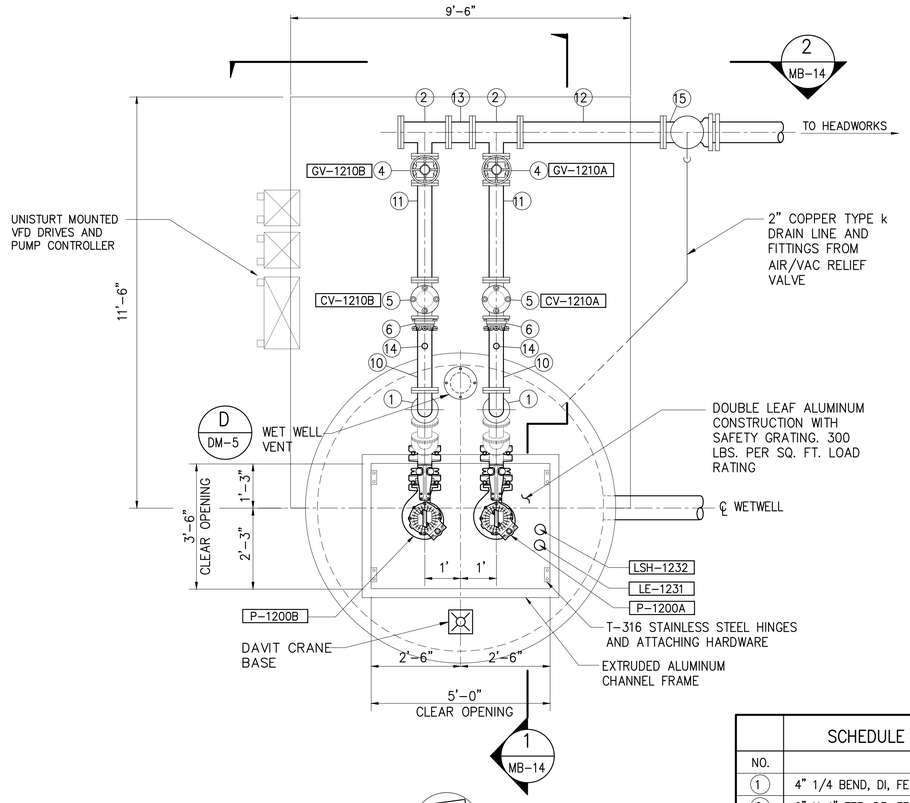

PLAN

SCALE: 1/2"=1'-0"

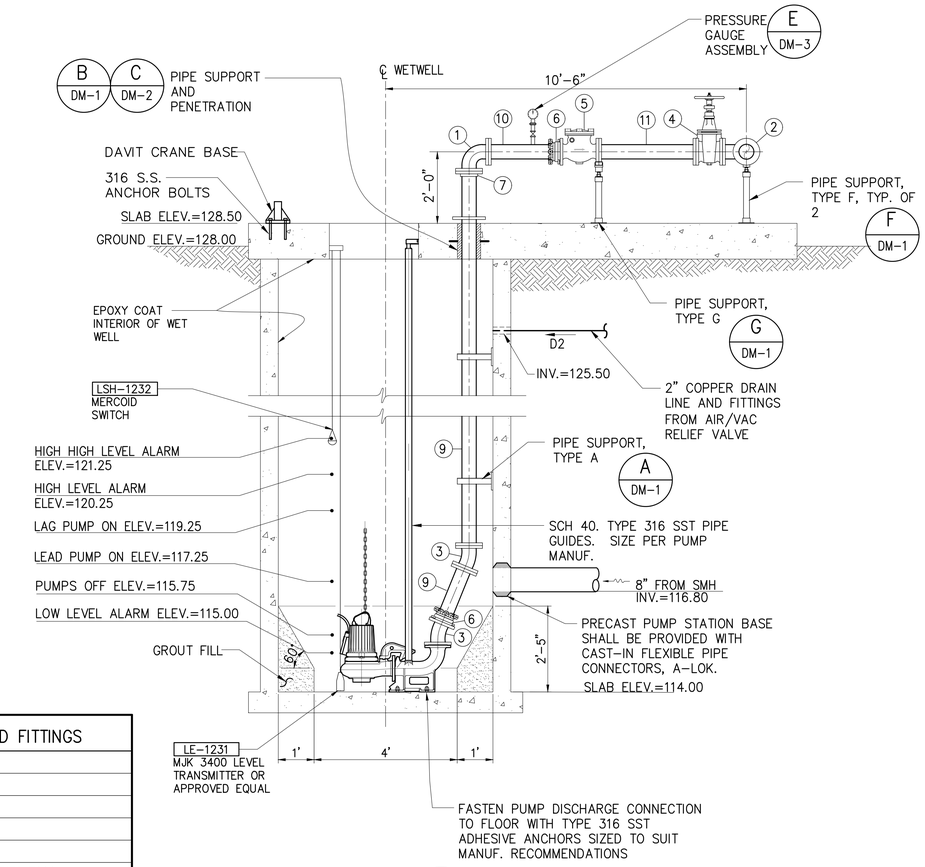

SECTION 1 (MB-14)

SCALE: 1/2"=1'-0"

NO.	SCHEDULE OF VALVES AND FITTINGS DESCRIPTION
1	4" 1/4 BEND, DI, FE
2	6" X 4" TEE, DE, FE
3	4" 1/16 BEND, DI, FE
4	4" GATE VALVE, FE
5	4" SWING CHECK VALVE, FE, VALMATIC SERIES 7800 LEVER AND WEIGHT OR APPROVED EQUAL
6	4" EBAA SERIES 2100 MEGA FLANGE
7	4" EBAA SERIES 1000 E-Z FLANGE
8	NOT USED
9	4" SPOOL, DI, LENGTH TO SUIT, FExPE
10	4" SPOOL, DI, L=2'-0", FExPE
11	4" SPOOL, DI, L=2'-9", FE
12	6" SPOOL, DI, L=4'-0", FE
13	6" SPOOL, DI, L=0'-8", FExPE
14	PRESSURE GAUGE ASSEMBLY
15	6" TEE, DI, FE
16	6" BLIND FLANGE WITH 2" THREADED HOLE, DI
17	6" 1/4 BEND, DI, MJ

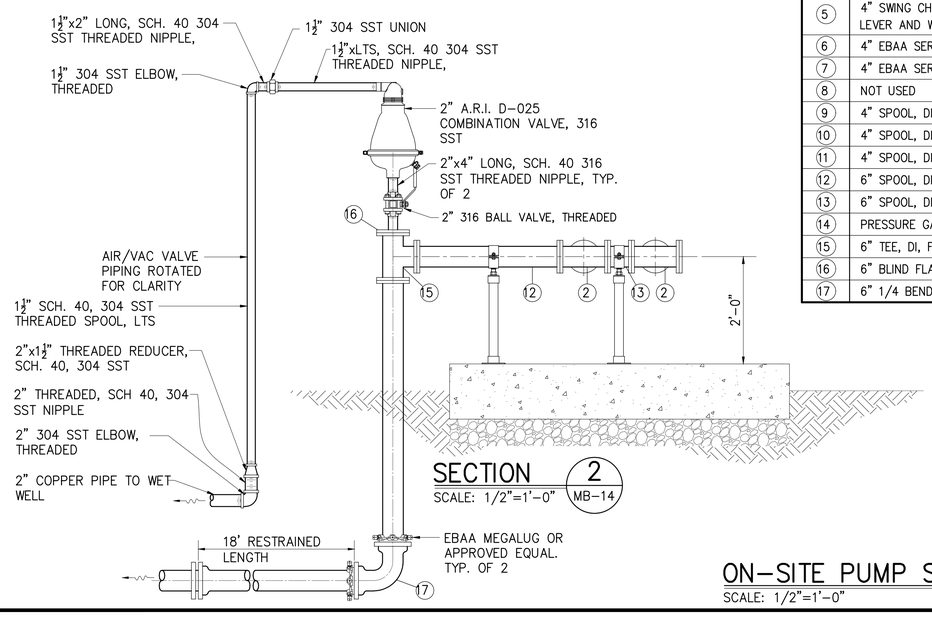

SECTION 2 (MB-14)

SCALE: 1/2"=1'-0"

EQUIPMENT NO.	PUMP MANUF.	NO. OF UNITS	TYPE	FLOW, GPM	STATIC	TDH. FT	SPEED, RPM	TDH. FT	Hp	VAC	PHASE	FREQUENCY
P-1200 A/B	FLYGT	TWO (2)	SUBMERSIBLE	333	25	28	1800(VAR)	10	5.5	480	3	60Hz

ON-SITE PUMP STATION PLAN AND SECTION

SCALE: 1/2"=1'-0"

AustinTsutsumi & ASSOCIATES, INC.
CIVIL ENGINEERS I SURVEYORS
HONOLULU I WAILUKU I HILO, HAWAII
501 SUMNER STREET, SUITE 521
HONOLULU, HAWAII 96817
PHONE: 808-533-3646
FAX: 808-526-1267

STATE OF HAWAII
DEPARTMENT OF HAWAIIAN HOME LANDS

PŪLEHUNUI REGIONAL INFRASTRUCTURE

AUSTIN, TSUTSUMI & ASSOC., INC.
ENGINEERS, SURVEYORS • HONOLULU, HAWAII

BRYAN H. KOBA
LICENSED PROFESSIONAL ENGINEER
No. 14948
HAWAII U.S.A.

This work was prepared by me or under my supervision and construction of this project will be under my observation. (Observation of construction as defined in Chapter 16-115 Subchapter 1 Definitions of the Hawaii Administrative Rules "Professional Engineers, Architects, Surveyors, and Landscape Architects.")

SIGNATURE — APRIL 30, 2020 EXP. DATE OF THE LICENSE

0 1 2
LINE IS 2 INCHES AT FULL SIZE
(IF NOT 2-inches : Scale Accordingly)

REVISION	DATE	BRIEF	BY

Project No:	16-576
Scale:	AS NOTED
Date:	1/31/2020
Designed By:	BHK
Drawn By:	BHK
Checked By:	

ON-SITE PUMP STATION PLAN AND SECTION

DWG. NO.
MB-14

FILE	POCKET	FOLDER	NO.

JOB NO. O-11-056.004
FN: C:\PROJECT FOLDER\16-576 DHHL PROJECT\ENGINEERING\DWG\CONSTRUCTION DRAWING SET\MB-14 WWTP PUMP STATION.DWG

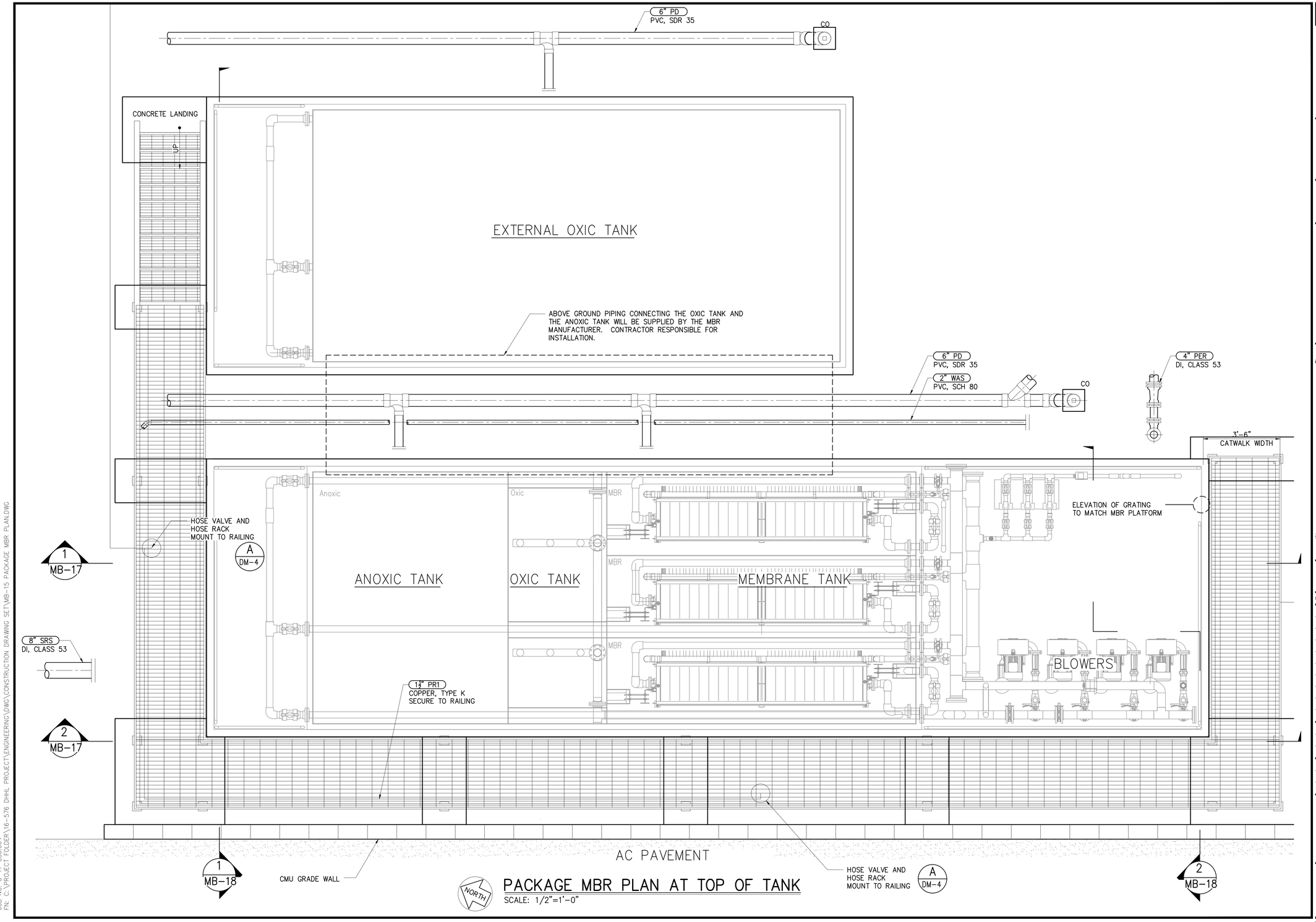

PACKAGE MBR PLAN AT TOP OF TANK

SCALE: 1/2"=1'-0"

JOB NO. 0-11-056.004
FN: C:\PROJECT FOLDER\16-576 DHHL PROJECT\ENGINEERING\DWG\CONSTRUCTION DRAWING SET\MB-15 PACKAGE MBR PLAN.DWG

AustinTsutsumi
& ASSOCIATES, INC.
CIVIL ENGINEERS I SURVEYORS
HONOLULU I WAILUKU I HILO, HAWAII

501 SUMNER STREET, SUITE 521
HONOLULU, HAWAII 96817

PHONE: 808-533-3646
FAX: 808-526-1267

STATE OF HAWAII
DEPARTMENT OF
HAWAIIAN HOME LANDS

PŪLEHUNUI
REGIONAL
INFRASTRUCTURE

AUSTIN, TSUTSUMI & ASSOC., INC.
ENGINEERS, SUVEYORS • HONOLULU, HAWAII

BRYAN H. KOBA
LICENSED PROFESSIONAL ENGINEER
No. 14948
HAWAII U.S.A.

This work was prepared by me or under my supervision and construction of this project will be under my observation. (Observation of construction as defined in Chapter 16-115 Subchapter 1 Definitions of the Hawaii Administrative Rules "Professional Engineers, Architects, Surveyors, and Landscape Architects.")

SIGNATURE — APRIL 30, 2020 EXP. DATE OF THE LICENSE

0 1 2
LINE IS 2 INCHES AT FULL SIZE
(If NOT 2-inches : Scale Accordingly)

REVISION	DATE	BRIEF	BY

Project No:	16-576
Scale:	AS NOTED
Date:	1/31/2020
Designed By:	BHK
Drawn By:	BHK
Checked By:	

PACKAGE MBR PLAN
AT TOP OF TANK

DWG. NO.
MB-15

SHEET 105 OF 201

FILE	POCKET	FOLDER	NO.

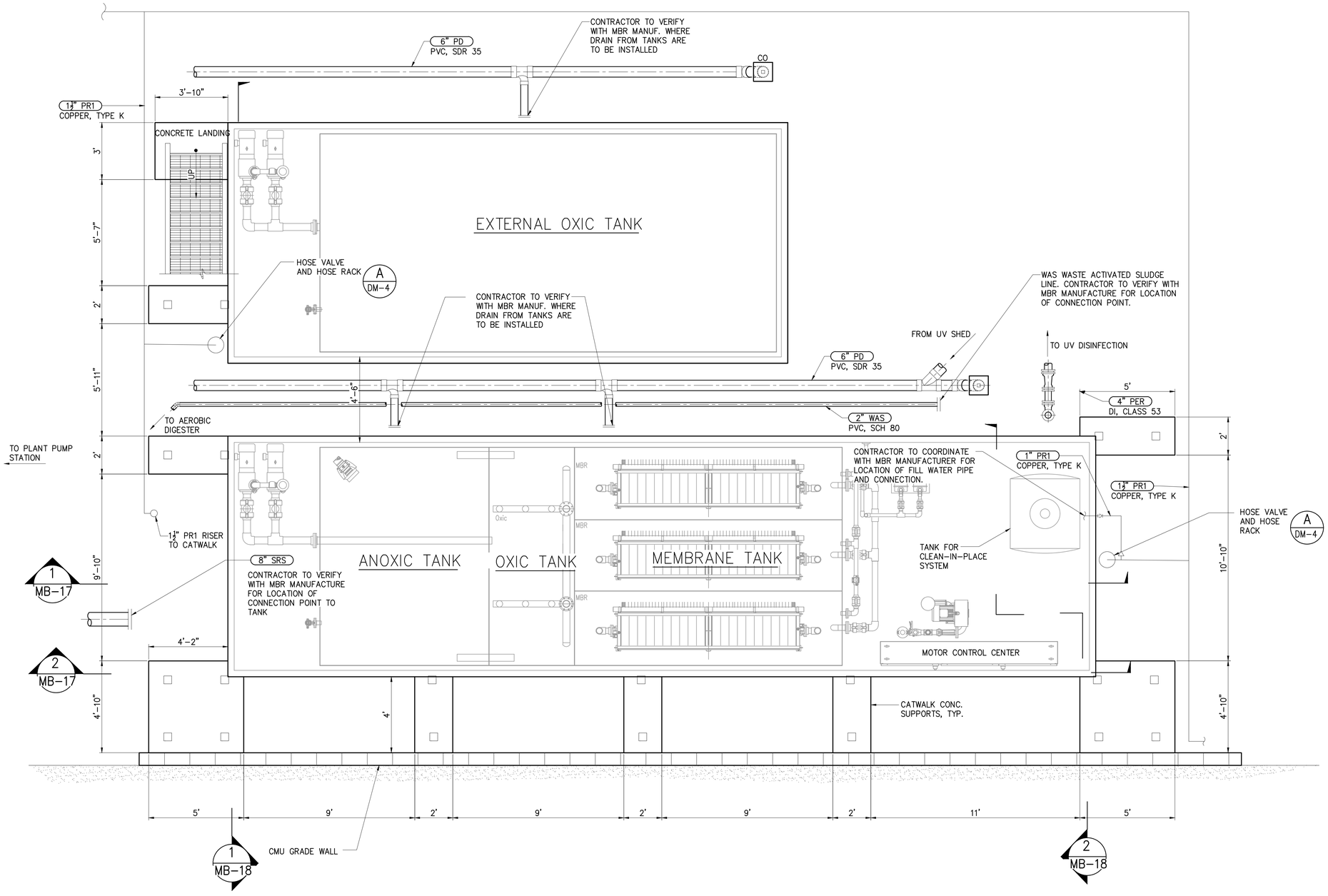

PACKAGE MBR PLAN AT GRADE

SCALE: 3/8"=1'-0"

AustinTsutsumi & ASSOCIATES, INC.
CIVIL ENGINEERS I SURVEYORS
HONOLULU I WAILUKU I HILO, HAWAII

501 SUMNER STREET, SUITE 521
HONOLULU, HAWAII 96817

PHONE: 808-533-3646
FAX: 808-526-1267

STATE OF HAWAII
DEPARTMENT OF
HAWAIIAN HOME LANDS

PŪLEHUNUI
REGIONAL
INFRASTRUCTURE

AUSTIN, TSUTSUMI & ASSOC., INC.
ENGINEERS, SUVEYORS • HONOLULU, HAWAII

BRYAN H. KOBA
LICENSED PROFESSIONAL ENGINEER
No. 14948
HAWAII U.S.A.

This work was prepared by me or under my supervision and construction of this project will be under my observation. (Observation of construction as defined in Chapter 16-115 Subchapter 1 Definitions of the Hawaii Administrative Rules "Professional Engineers, Architects, Surveyors, and Landscape Architects.")

SIGNATURE APRIL 30, 2020 EXP. DATE OF THE LICENSE

0 1 2
LINE IS 2 INCHES AT FULL SIZE
(If NOT 2-inches : Scale Accordingly)

REVISION	DATE	BRIEF	BY

Project No:	16-576
Scale:	AS NOTED
Date:	1/31/2020
Designed By:	BHK
Drawn By:	BHK
Checked By:	

PACKAGE MBR PLAN AT GRADE

DWG. NO.

MB-16

SHEET 106 OF 201

FILE	POCKET	FOLDER	NO.

JOB NO. 0-11-056.004
FN: C:\PROJECT FOLDER\16-576 DHHL PROJECT\ENGINEERING\DWG\CONSTRUCTION DRAWING SET\MB-16 PACKAGE MBR PLAN AT GRADE.DWG

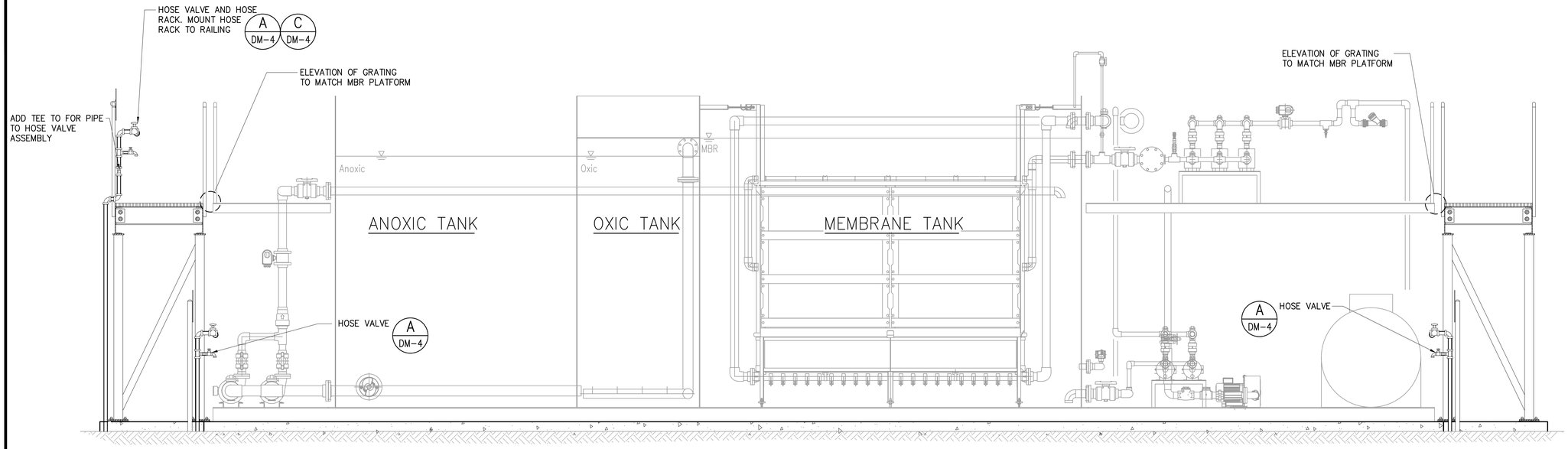

SECTION 1 / MB-17
SCALE: 1/2"=1'-0"

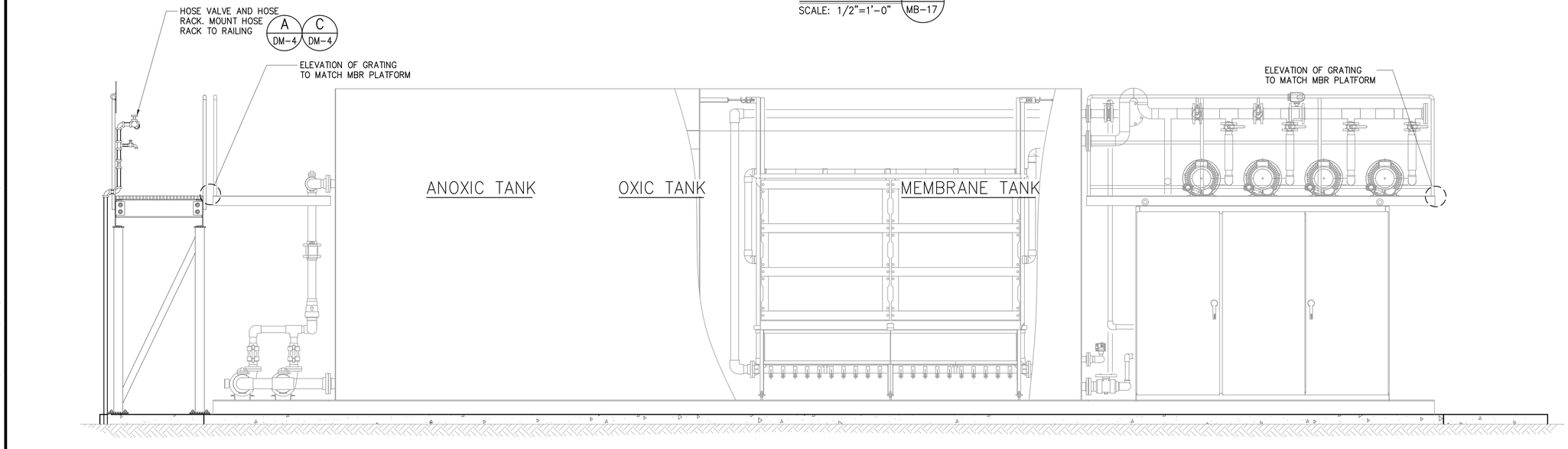

SECTION 2 / MB-17
SCALE: 1/2"=1'-0"

JOB NO. O-11-056.004
FN: C:\PROJECT FOLDER\16-576 DHHL PROJECT\ENGINEERING\DWG\CONSTRUCTION DRAWING SET\MB-17 PACKAGE MBR SECTIONS - 1.DWG

AustinTsutsumi & ASSOCIATES, INC.
CIVIL ENGINEERS I SURVEYORS
HONOLULU I WAILUKU I HILO, HAWAII

501 SUMNER STREET, SUITE 521
HONOLULU, HAWAII 96817

PHONE: 808-533-3646
FAX: 808-526-1267

STATE OF HAWAII
DEPARTMENT OF
HAWAIIAN HOME LANDS

PŪLEHUNUI
REGIONAL
INFRASTRUCTURE

AUSTIN, TSUTSUMI & ASSOC., INC.
ENGINEERS, SUVEYORS • HONOLULU, HAWAII

BRYAN H. KOBA
LICENSED PROFESSIONAL ENGINEER
No. 14948
HAWAII U.S.A.

This work was prepared by me or under my supervision and construction of this project will be under my observation. (Observation of construction as defined in Chapter 16-115 Subchapter 1 Definitions of the Hawaii Administrative Rules "Professional Engineers, Architects, Surveyors, and Landscape Architects.")

SIGNATURE — APRIL 30, 2020 EXP. DATE OF THE LICENSE

0 1 2
LINE IS 2 INCHES AT FULL SIZE
(IF NOT 2-inches : Scale Accordingly)

REVISION	DATE	BRIEF	BY

Project No:	16-576
Scale:	AS NOTED
Date:	1/31/2020
Designed By:	BHK
Drawn By:	BHK
Checked By:	

PACKAGE MBR
SECTIONS - 1

DWG. NO.
MB-17

SHEET 107 OF 201

FILE	POCKET	FOLDER	NO.

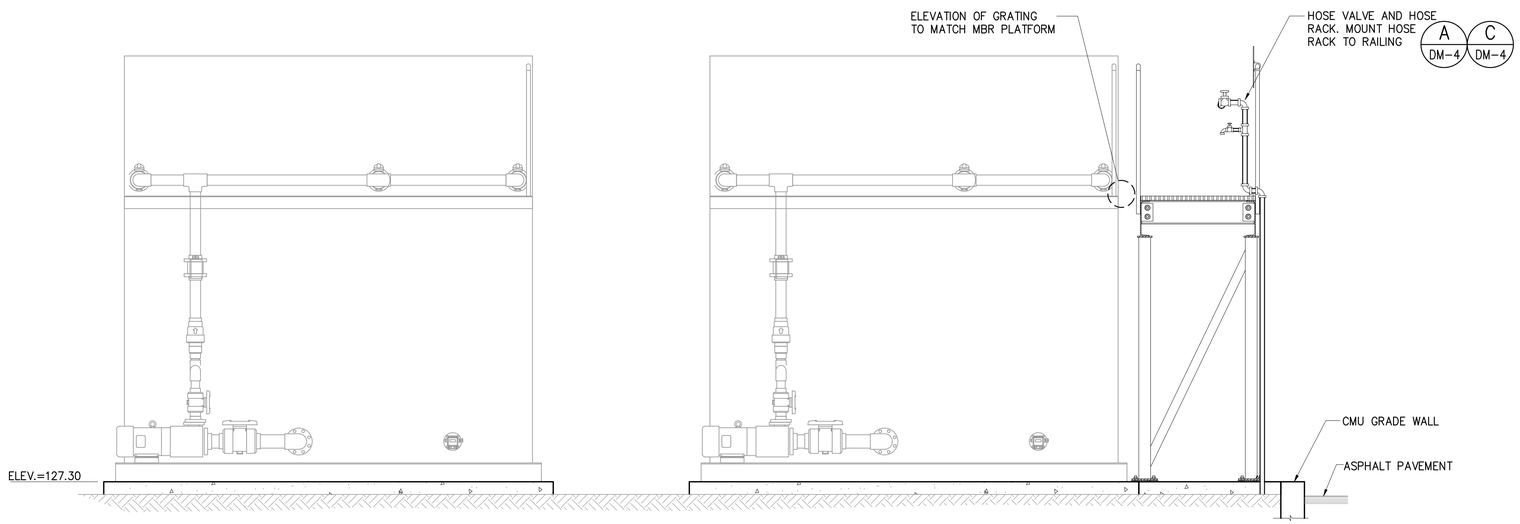

SECTION 1 (MB-18)
SCALE: 1/2"=1'-0"

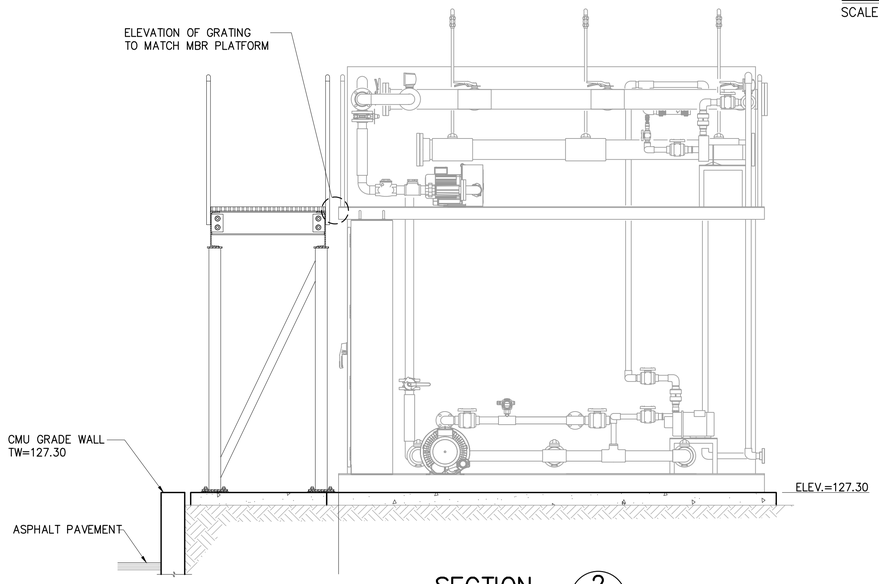

SECTION 2 (MB-18)
SCALE: 1/2"=1'-0"

PACKAGE MBR SECTIONS – 2

SCALE: 1/2"=1'-0"

JOB NO. O-11-056.004
FN: C:\PROJECT FOLDER\16-576 DHHL PROJECT\ENGINEERING\DWG\CONSTRUCTION DRAWING SET\MB-18 PACKAGE MBR SECTIONS - 2.DWG

AustinTsutsumi
& ASSOCIATES, INC.
CIVIL ENGINEERS I SURVEYORS
HONOLULU I WAILUKU I HILO, HAWAII

501 SUMNER STREET, SUITE 521
HONOLULU, HAWAII 96817

PHONE: 808-533-3646
FAX: 808-526-1267

STATE OF HAWAII
DEPARTMENT OF
HAWAIIAN HOME LANDS

PŪLEHUNUI
REGIONAL
INFRASTRUCTURE

AUSTIN, TSUTSUMI & ASSOC., INC.
ENGINEERS, SUVEYORS • HONOLULU, HAWAII

BRYAN H. KOBA
LICENSED PROFESSIONAL ENGINEER
No. 14948
HAWAII U.S.A.

This work was prepared by me or under my supervision and construction of this project will be under my observation. (Observation of construction as defined in Chapter 16-115 Subchapter 1 Definitions of the Hawaii Administrative Rules "Professional Engineers, Architects, Surveyors, and Landscape Architects.")

SIGNATURE — APRIL 30, 2020 EXP. DATE OF THE LICENSE

0 1 2
LINE IS 2 INCHES AT FULL SIZE
(If NOT 2-inches : Scale Accordingly)

REVISION	DATE	BRIEF	BY

Project No:	16-576
Scale:	AS NOTED
Date:	1/31/2020
Designed By:	BHK
Drawn By:	BHK
Checked By:	

PACKAGE MBR
SECTIONS – 2

DWG. NO.
MB-18

SHEET 108 OF 201

FILE	POCKET	FOLDER	NO.

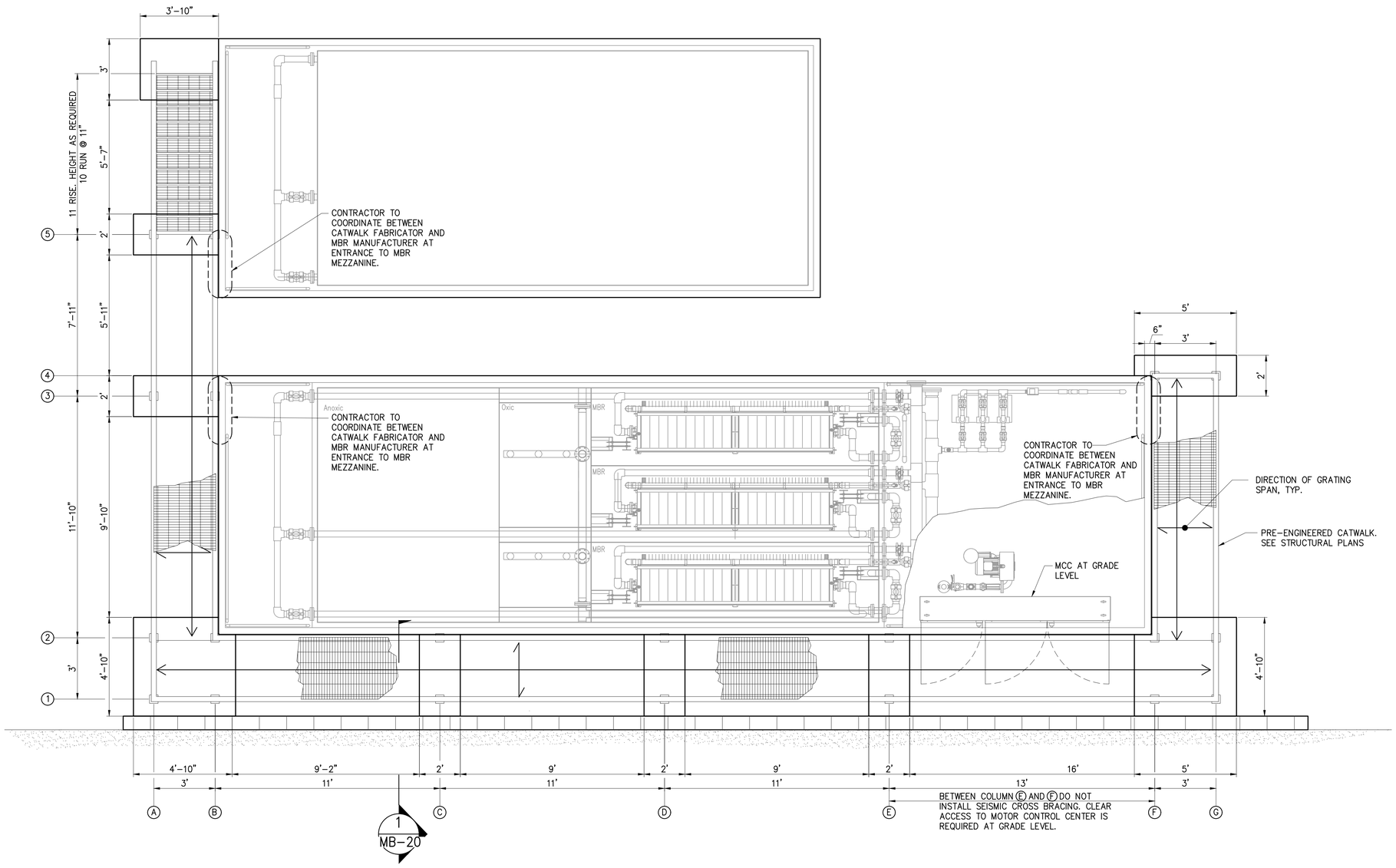

PACKAGE MBR GRATING PLAN

SCALE: 3/8"=1'-0"

AustinTsutsumi
& ASSOCIATES, INC.
CIVIL ENGINEERS I SURVEYORS
HONOLULU I WAILUKU I HILO, HAWAII

501 SUMNER STREET, SUITE 521
HONOLULU, HAWAII 96817

PHONE: 808-533-3646
FAX: 808-526-1267

STATE OF HAWAII
DEPARTMENT OF
HAWAIIAN HOME LANDS

PŪLEHUNUI
REGIONAL
INFRASTRUCTURE

AUSTIN, TSUTSUMI & ASSOC., INC.
ENGINEERS, SUVEYORS • HONOLULU, HAWAII

BRYAN H. KOBA
LICENSED PROFESSIONAL ENGINEER
No. 14948
HAWAII U.S.A.

This work was prepared by me or under my supervision and construction of this project will be under my observation. (Observation of construction as defined in Chapter 16-115 Subchapter 1 Definitions of the Hawaii Administrative Rules "Professional Engineers, Architects, Surveyors, and Landscape Architects.")

SIGNATURE — APRIL 30, 2020 — EXP. DATE OF THE LICENSE

0 1 2
LINE IS 2 INCHES AT FULL SIZE
(If NOT 2-inches : Scale Accordingly)

REVISION	DATE	BRIEF	BY

Project No:	16-576
Scale:	AS NOTED
Date:	1/31/2020
Designed By:	BHK
Drawn By:	BHK
Checked By:	

PACKAGE MRB
GRATING PLAN AND
DETAIL

DWG. NO.

MB-19

SHEET 109 OF 201

FILE	POCKET	FOLDER	NO.

JOB NO. O-11-056.004
FN: C:\PROJECT FOLDER\16-576 DHHL PROJECT\ENGINEERING\DWG\CONSTRUCTION DRAWING SET\MB-19 PACKAGE MBR GRATING PLAN AND DETAIL.DWG

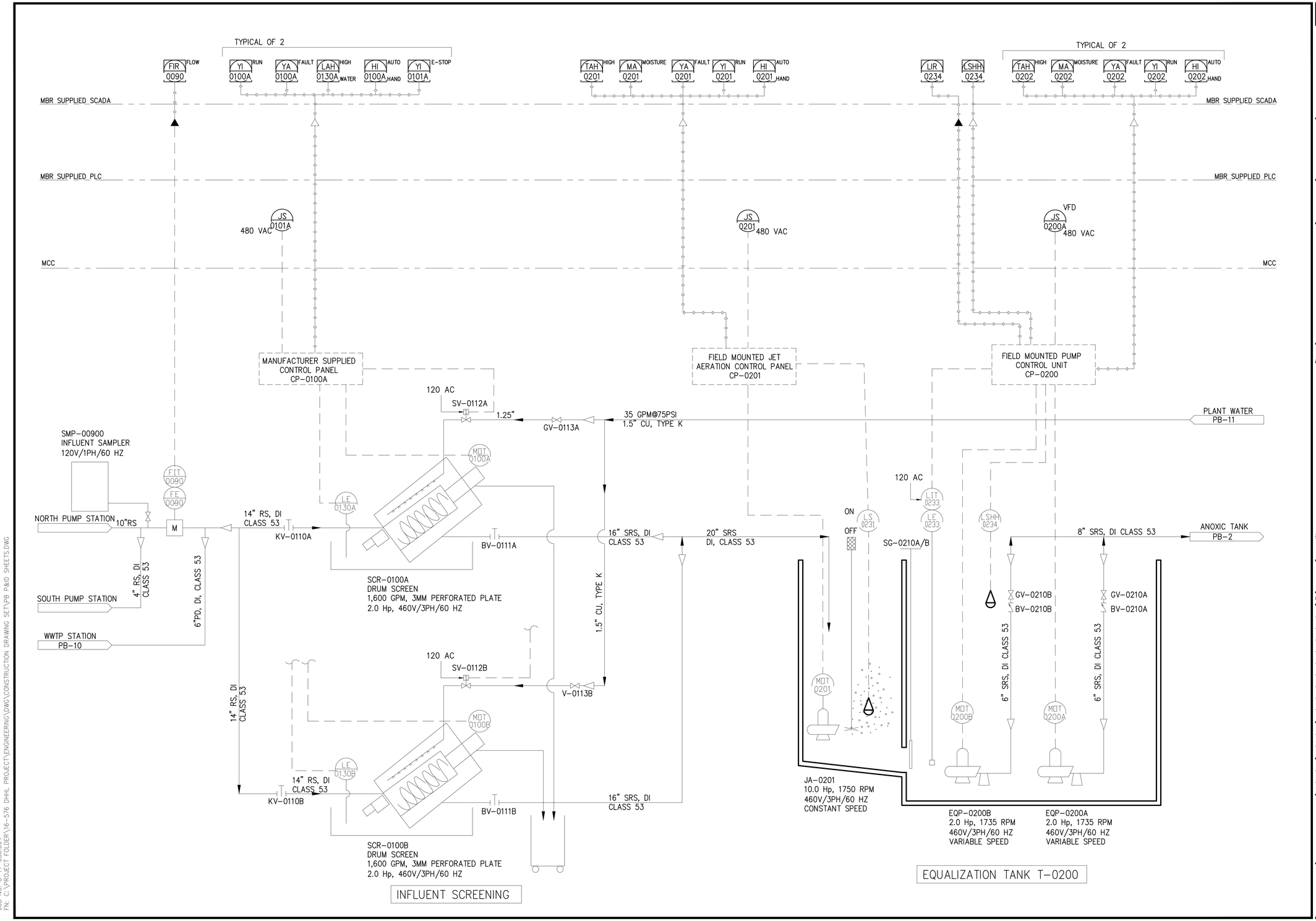

AustinTsutsumi & ASSOCIATES, INC.
CIVIL ENGINEERS I SURVEYORS
HONOLULU I WAILUKU I HILO, HAWAII

501 SUMNER STREET, SUITE 521
HONOLULU, HAWAII 96817

PHONE: 808-533-3646
FAX: 808-526-1267

STATE OF HAWAII
DEPARTMENT OF
HAWAIIAN HOME LANDS

PŪLEHUNUI
REGIONAL
INFRASTRUCTURE

AUSTIN, TSUTSUMI & ASSOC., INC.
ENGINEERS, SUVEYORS • HONOLULU, HAWAII

BRYAN H. KOBA
LICENSED PROFESSIONAL ENGINEER
No. 14948
HAWAII U.S.A.

This work was prepared by me or under my supervision and construction of this project will be under my observation. (Observation of construction as defined in Chapter 16-115 Subchapter 1 Definitions of the Hawaii Administrative Rules "Professional Engineers, Architects, Surveyors, and Landscape Architects.")

SIGNATURE APRIL 30, 2020
EXP. DATE OF THE LICENSE

0 1 2
LINE IS 2 INCHES AT FULL SIZE
(If NOT 2-inches : Scale Accordingly)

REVISION	DATE	BRIEF	BY

Project No:	16-576
Scale:	AS NOTED
Date:	1/31/2020
Designed By:	BHK
Drawn By:	BHK
Checked By:	

P&ID HEADWORKS

DWG. NO.
PB-1

SHEET 110 OF 201

FILE	POCKET	FOLDER	NO.

JOB NO. 0-11-056.004
FN: C:\PROJECT FOLDER\16-576 DHHL PROJECT\ENGINEERING\DWG\CONSTRUCTION DRAWING SET\PB P&ID SHEETS.DWG

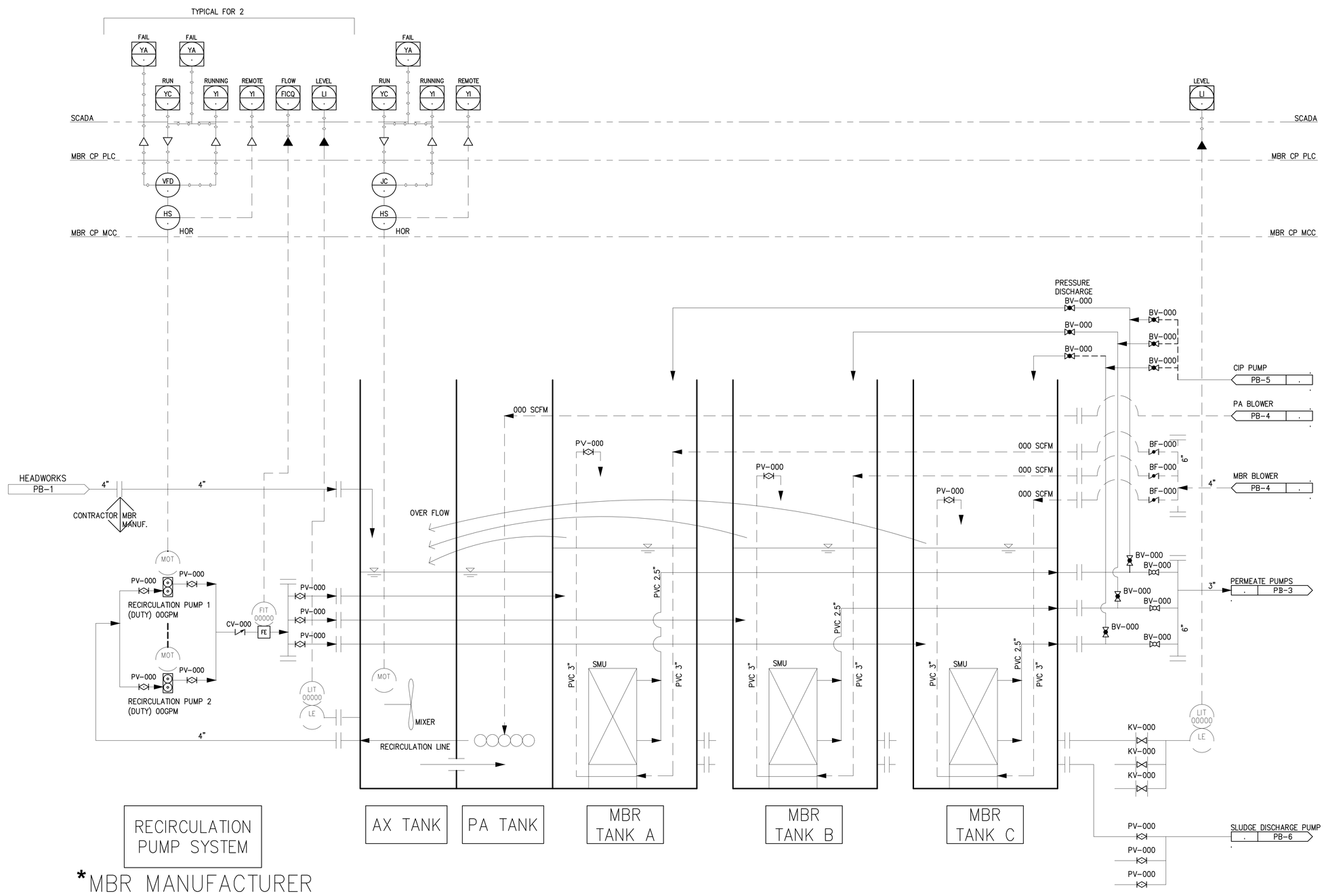

*MBR MANUFACTURER

JOB NO. 0-11-056.004
FN: C:\PROJECT FOLDER\16-576 DHHL PROJECT\ENGINEERING\DWG\CONSTRUCTION DRAWING SET\PB P&ID SHEETS.DWG

AustinTsutsumi
& ASSOCIATES, INC.
CIVIL ENGINEERS I SURVEYORS
HONOLULU I WAILUKU I HILO, HAWAII

501 SUMNER STREET, SUITE 521
HONOLULU, HAWAII 96817

PHONE: 808-533-3646
FAX: 808-526-1267

STATE OF HAWAII
DEPARTMENT OF
HAWAIIAN HOME LANDS

PŪLEHUNUI
REGIONAL
INFRASTRUCTURE

AUSTIN, TSUTSUMI & ASSOC., INC.
ENGINEERS, SUVEYORS • HONOLULU, HAWAII

BRYAN H. KOBA
LICENSED PROFESSIONAL ENGINEER
No. 14948
HAWAII U.S.A.

This work was prepared by me or under my supervision and construction of this project will be under my observation. (Observation of construction as defined in Chapter 16-115 Subchapter 1 Definitions of the Hawaii Administrative Rules "Professional Engineers, Architects, Surveyors, and Landscape Architects.")

SIGNATURE — APRIL 30, 2020 EXP. DATE OF THE LICENSE

0 1 2
LINE IS 2 INCHES AT FULL SIZE
(If NOT 2-inches : Scale Accordingly)

REVISION	DATE	BREF	BY

Project No:	16-576
Scale:	AS NOTED
Date:	1/31/2020
Designed By:	BHK
Drawn By:	BHK
Checked By:	

MBR
(ON MBR SKIDS)

DWG. NO.
PB-2

SHEET 111 OF 201

FILE	POCKET	FOLDER	NO.

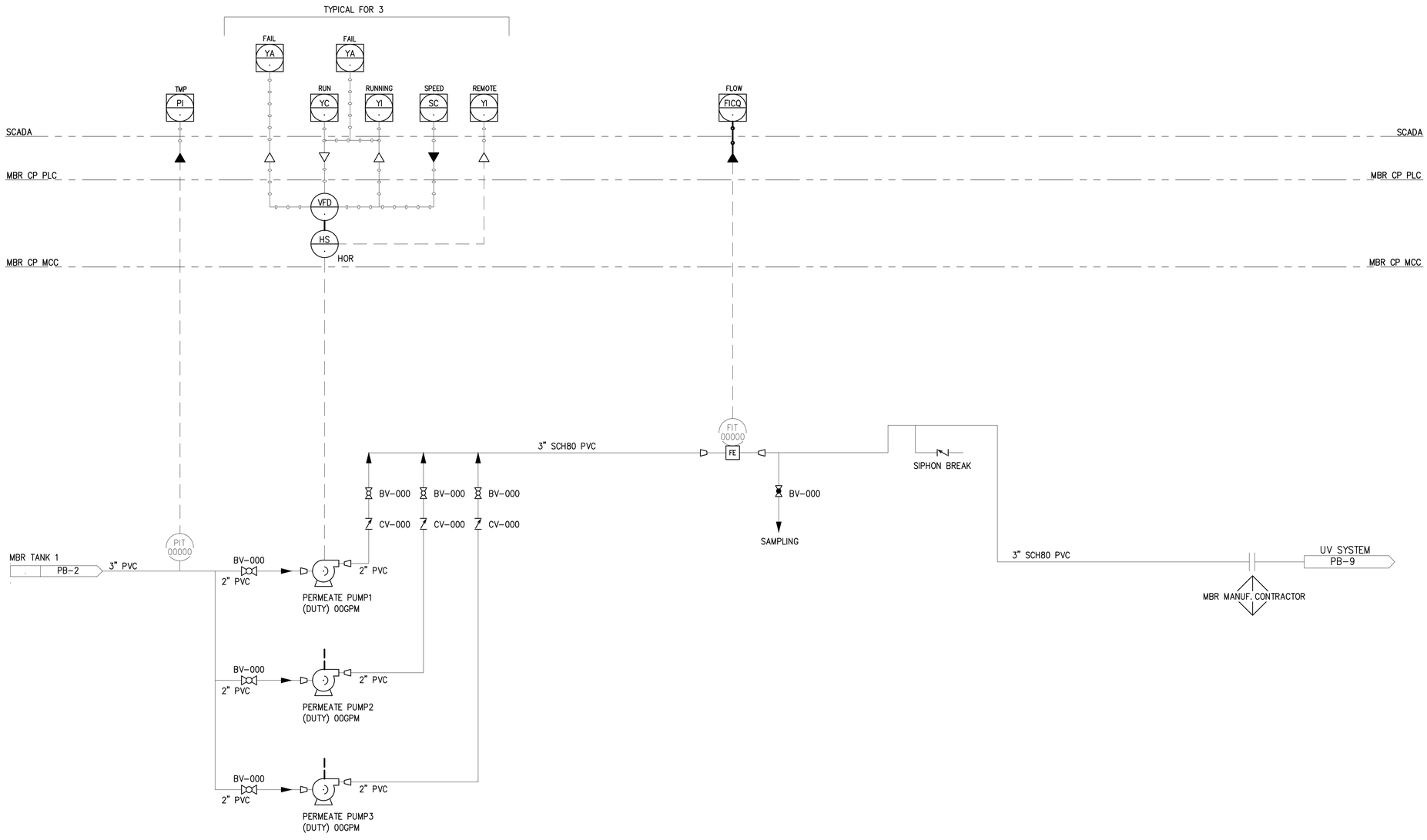

PERMEATE PUMP SYSTEM

*MBR MANUFACTURER

AustinTsutsumi
& ASSOCIATES, INC.
CIVIL ENGINEERS I SURVEYORS
HONOLULU I WAILUKU I HILO, HAWAII

501 SUMNER STREET, SUITE 521
HONOLULU, HAWAII 96817

PHONE: 808-533-3646
FAX: 808-526-1267

STATE OF HAWAII
DEPARTMENT OF
HAWAIIAN HOME LANDS

PŪLEHUNUI
REGIONAL
INFRASTRUCTURE

AUSTIN, TSUTSUMI & ASSOC., INC.
ENGINEERS, SUVEYORS • HONOLULU, HAWAII

BRYAN H. KOBA
LICENSED PROFESSIONAL ENGINEER
No. 14948
HAWAII U.S.A.

This work was prepared by me or under my supervision and construction of this project will be under my observation. (Observation of construction as defined in Chapter 16-115 Subchapter 1 Definitions of the Hawaii Administrative Rules "Professional Engineers, Architects, Surveyors, and Landscape Architects.")

SIGNATURE APRIL 30, 2020
EXP. DATE OF THE LICENSE

0 1 2
LINE IS 2 INCHES AT FULL SIZE
(If NOT 2-inches : Scale Accordingly)

REVISION	DATE	BRIEF	BY

Project No:	16-576
Scale:	AS NOTED
Date:	1/31/2020
Designed By:	BHK
Drawn By:	BHK
Checked By:	

MBR-PERMEATE PUMPS (ON MBR SKIDS)

DWG. NO.

PB-3

SHEET 112 OF 201

FILE	POCKET	FOLDER	NO.

JOB NO. O-11-056.004
FN: C:\PROJECT FOLDER\16-576 DHHL PROJECT\ENGINEERING\DWG\CONSTRUCTION DRAWING SET\PB P&ID SHEETS.DWG

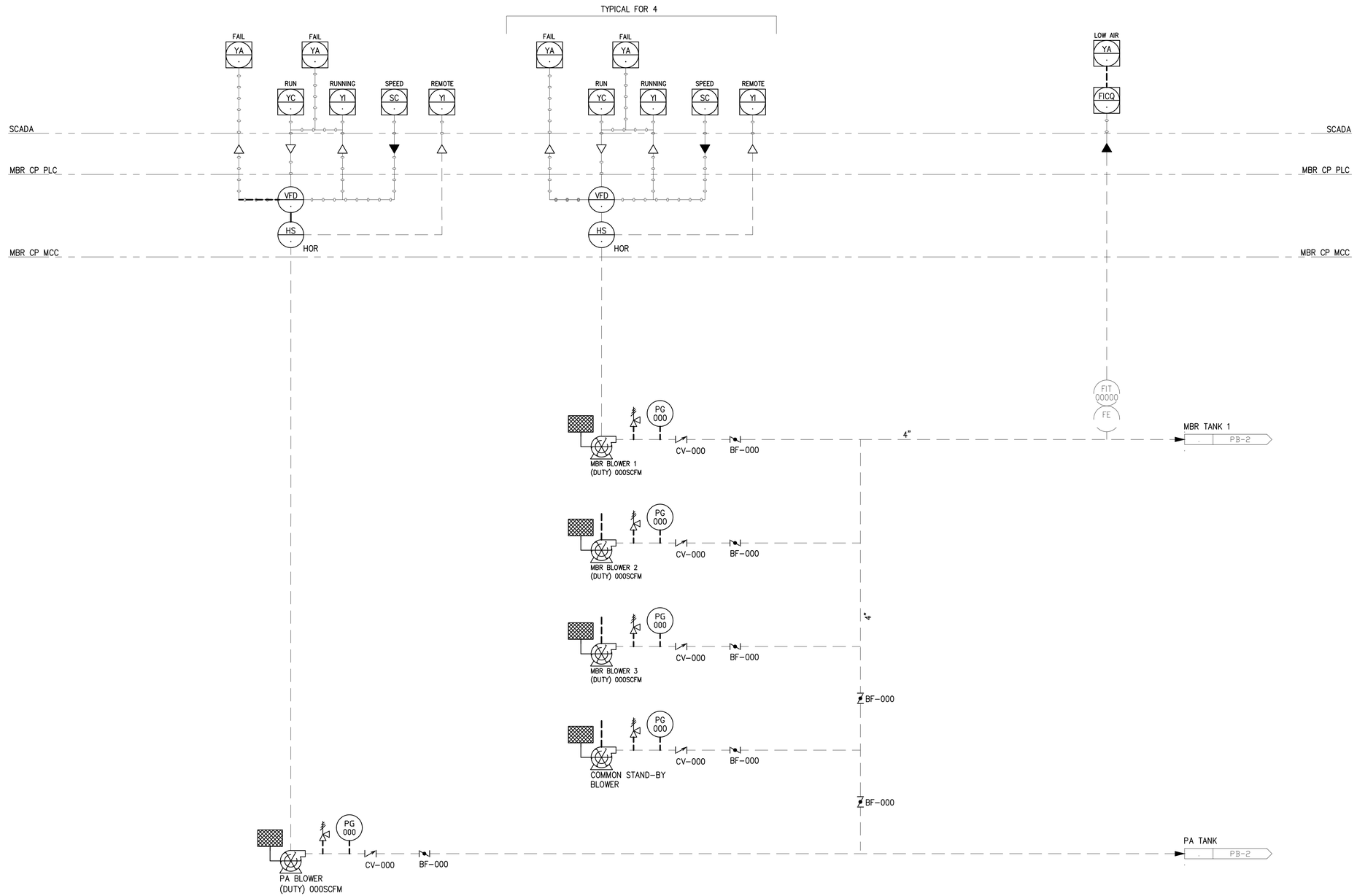

Blower System

*MBR MANUFACTURER

AustinTsutsumi
& ASSOCIATES, INC.
CIVIL ENGINEERS I SURVEYORS
HONOLULU I WAILUKU I HILO, HAWAII

501 SUMNER STREET, SUITE 521
HONOLULU, HAWAII 96817

PHONE: 808-533-3646
FAX: 808-526-1267

STATE OF HAWAII
DEPARTMENT OF
HAWAIIAN HOME LANDS

PŪLEHUNUI
REGIONAL
INFRASTRUCTURE

AUSTIN, TSUTSUMI & ASSOC., INC.
ENGINEERS, SUVEYORS • HONOLULU, HAWAII

BRYAN H. KOBA
LICENSED PROFESSIONAL ENGINEER
No. 14948
HAWAII U.S.A.

This work was prepared by me or under my supervision and construction of this project will be under my observation. (Observation of construction as defined in Chapter 16-115 Subchapter 1 Definitions of the Hawaii Administrative Rules "Professional Engineers, Architects, Surveyors, and Landscape Architects.")

SIGNATURE APRIL 30, 2020
EXP. DATE OF THE LICENSE

0 1 2
LINE IS 2 INCHES AT FULL SIZE
(If NOT 2-inches : Scale Accordingly)

REVISION	DATE	BRIEF	BY

Project No:	16-576
Scale:	AS NOTED
Date:	1/31/2020
Designed By:	BHK
Drawn By:	BHK
Checked By:	

MBR-BLOWERS
(ON MBR SKIDS)

DWG. NO.
PB-4

FILE	POCKET	FOLDER	NO.

JOB NO. O-11-056.004
FN: C:\PROJECT FOLDER\16-576 DHHL PROJECT\ENGINEERING\DWG\CONSTRUCTION DRAWING SET\PB P&ID SHEETS.DWG

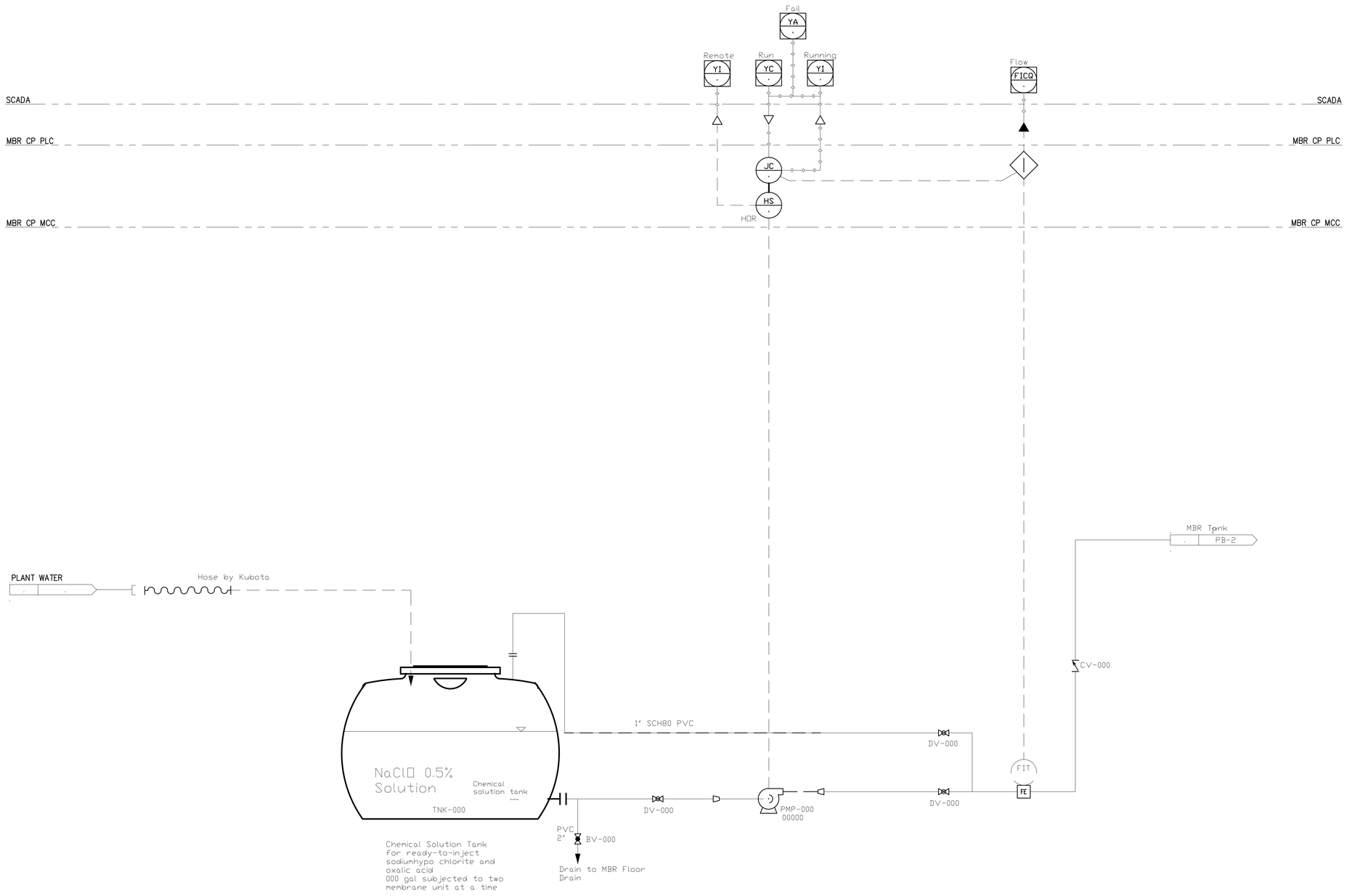

CIP System

*MBR MANUFACTURER

JOB NO. O-11-056.004
FN: C:\PROJECT FOLDER\16-576 DHHL PROJECT\ENGINEERING\DWG\CONSTRUCTION DRAWING SET\PB P&ID SHEETS.DWG

AustinTsutsumi
& ASSOCIATES, INC.
CIVIL ENGINEERS I SURVEYORS
HONOLULU I WAILUKU I HILO, HAWAII

501 SUMNER STREET, SUITE 521
HONOLULU, HAWAII 96817

PHONE: 808-533-3646
FAX: 808-526-1267

STATE OF HAWAII
DEPARTMENT OF
HAWAIIAN HOME LANDS

PŪLEHUNUI
REGIONAL
INFRASTRUCTURE

AUSTIN, TSUTSUMI & ASSOC., INC.
ENGINEERS, SUVEYORS • HONOLULU, HAWAII

BRYAN H. KOBA
LICENSED PROFESSIONAL ENGINEER
No. 14948
HAWAII U.S.A.

This work was prepared by me or under my supervision and construction of this project will be under my observation. (Observation of construction as defined in Chapter 16-115 Subchapter 1 Definitions of the Hawaii Administrative Rules "Professional Engineers, Architects, Surveyors, and Landscape Architects.")

SIGNATURE APRIL 30, 2020
EXP. DATE OF THE LICENSE

0 1 2
LINE IS 2 INCHES AT FULL SIZE
(If NOT 2-inches : Scale Accordingly)

REVISION	DATE	BRIEF	BY

Project No:	16-576
Scale:	AS NOTED
Date:	1/31/2020
Designed By:	BHK
Drawn By:	BHK
Checked By:	

MBR-CIP SYSTEM
(ON MBR SKIDS)

DWG. NO.
PB-5

FILE	POCKET	FOLDER	NO.

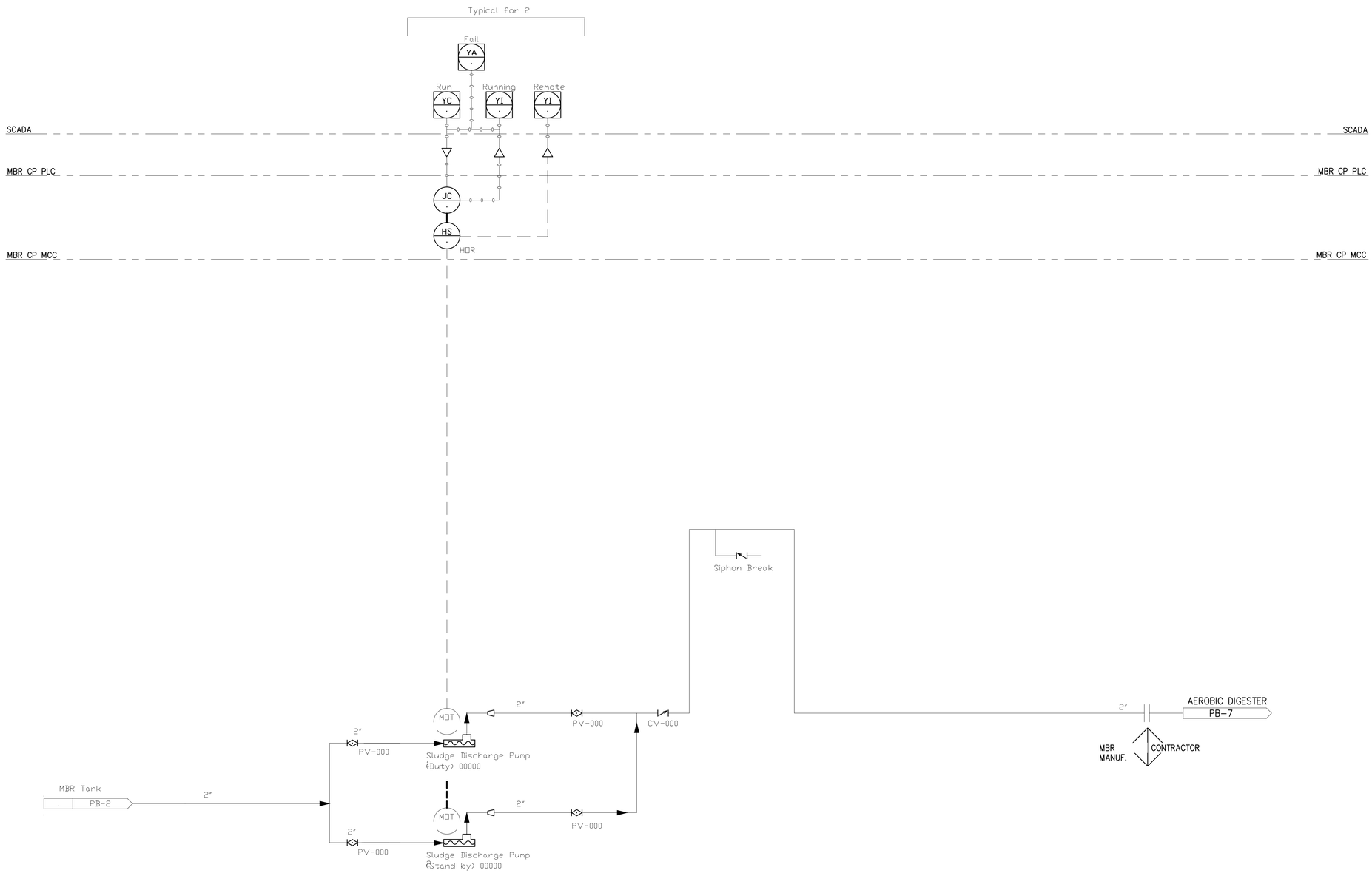

Sludge
Discharge Pump
System

*MBR MANUFACTURER

JOB NO. O-11-056.004
FN: C:\PROJECT FOLDER\16-576 DHHL PROJECT\ENGINEERING\DWG\CONSTRUCTION DRAWING SET\PB P&ID SHEETS.DWG

AustinTsutsumi
& ASSOCIATES, INC.
CIVIL ENGINEERS I SURVEYORS
HONOLULU I WAILUKU I HILO, HAWAII

501 SUMNER STREET, SUITE 521
HONOLULU, HAWAII 96817

PHONE: 808-533-3646
FAX: 808-526-1267

STATE OF HAWAII
DEPARTMENT OF
HAWAIIAN HOME LANDS

PŪLEHUNUI
REGIONAL
INFRASTRUCTURE

AUSTIN, TSUTSUMI & ASSOC., INC.
ENGINEERS, SUVEYORS • HONOLULU, HAWAII

BRYAN H. KOBA
LICENSED
PROFESSIONAL
ENGINEER
No. 14948
HAWAII U.S.A.

This work was prepared by me or under my supervision and construction of this project will be under my observation. (Observation of construction as defined in Chapter 16-115 Subchapter 1 Definitions of the Hawaii Administrative Rules "Professional Engineers, Architects, Surveyors, and Landscape Architects.")

SIGNATURE APRIL 30, 2020
EXP. DATE OF THE LICENSE

0 1 2
LINE IS 2 INCHES AT FULL SIZE
(If NOT 2-inches : Scale Accordingly)

REVISION	DATE	BRIEF	BY

Project No:	16-576
Scale:	AS NOTED
Date:	1/31/2020
Designed By:	BHK
Drawn By:	BHK
Checked By:	

MBR-WAS PUMPS
(ON MBR SKIDS)

DWG. NO.
PB-6

SHEET 115 OF 201

FILE	POCKET	FOLDER	NO.

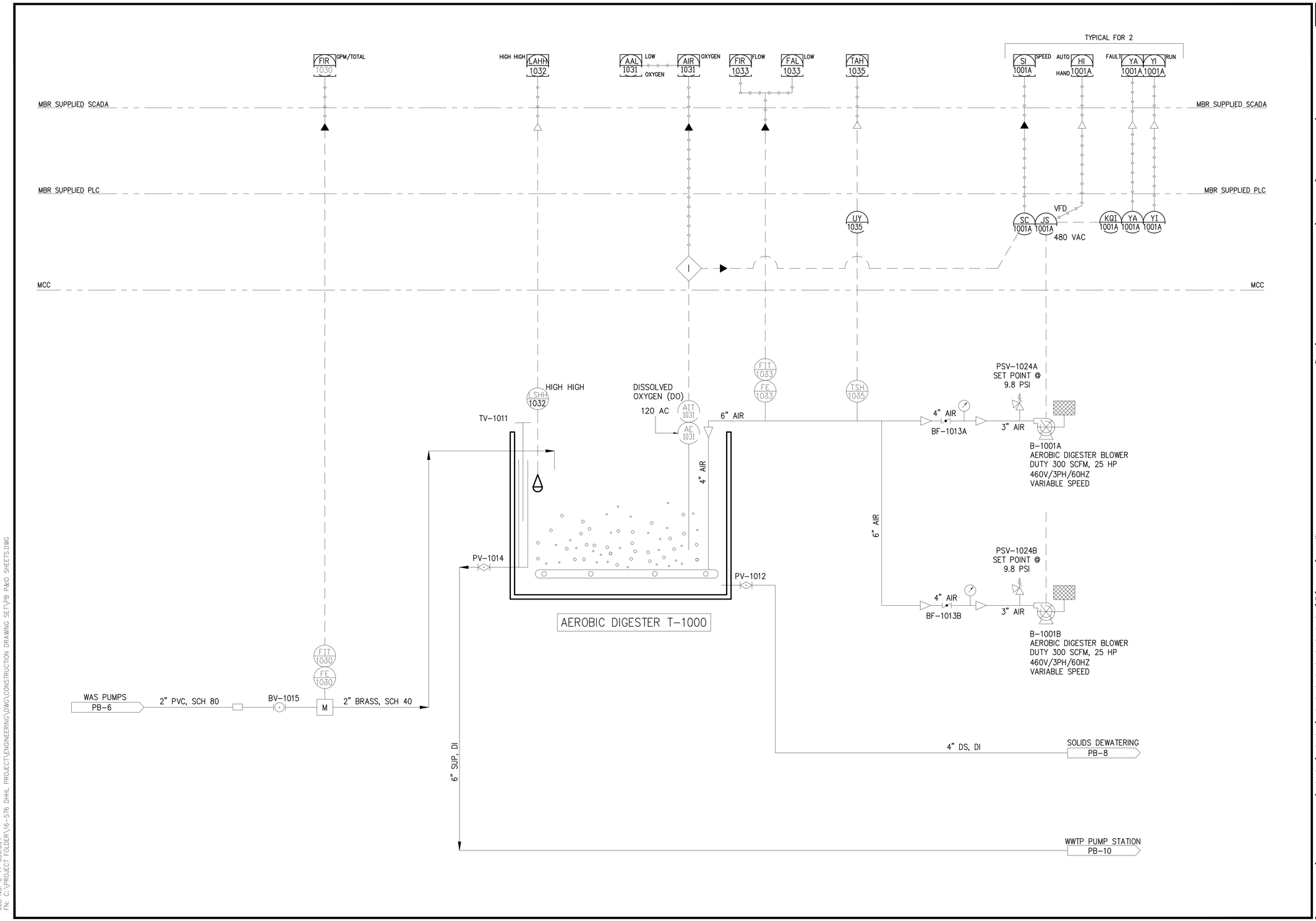

JOB NO. O-11-056.004
FN: C:\PROJECT FOLDER\16-576 DHHL PROJECT\ENGINEERING\DWG\CONSTRUCTION DRAWING SET\PB P&ID SHEETS.DWG

AustinTsutsumi & ASSOCIATES, INC.
CIVIL ENGINEERS I SURVEYORS
HONOLULU I WAILUKU I HILO, HAWAII

501 SUMNER STREET, SUITE 521
HONOLULU, HAWAII 96817

PHONE: 808-533-3646
FAX: 808-526-1267

STATE OF HAWAII
DEPARTMENT OF
HAWAIIAN HOME LANDS

PŪLEHUNUI
REGIONAL
INFRASTRUCTURE

AUSTIN, TSUTSUMI & ASSOC., INC.
ENGINEERS, SUVEYORS • HONOLULU, HAWAII

BRYAN H. KOBA
LICENSED PROFESSIONAL ENGINEER
No. 14948
HAWAII U.S.A.

This work was prepared by me or under my supervision and construction of this project will be under my observation. (Observation of construction as defined in Chapter 16-115 Subchapter 1 Definitions of the Hawaii Administrative Rules "Professional Engineers, Architects, Surveyors, and Landscape Architects.")

SIGNATURE APRIL 30, 2020 EXP. DATE OF THE LICENSE

0 1 2
LINE IS 2 INCHES AT FULL SIZE
(If NOT 2-inches : Scale Accordingly)

REVISION	DATE	BRIEF	BY

Project No:	16-576
Scale:	AS NOTED
Date:	1/31/2020
Designed By:	BHK
Drawn By:	BHK
Checked By:	

AEROBIC DIGESTER

DWG. NO.

PB-7

SHEET 116 OF 201

FILE	POCKET	FOLDER	NO.

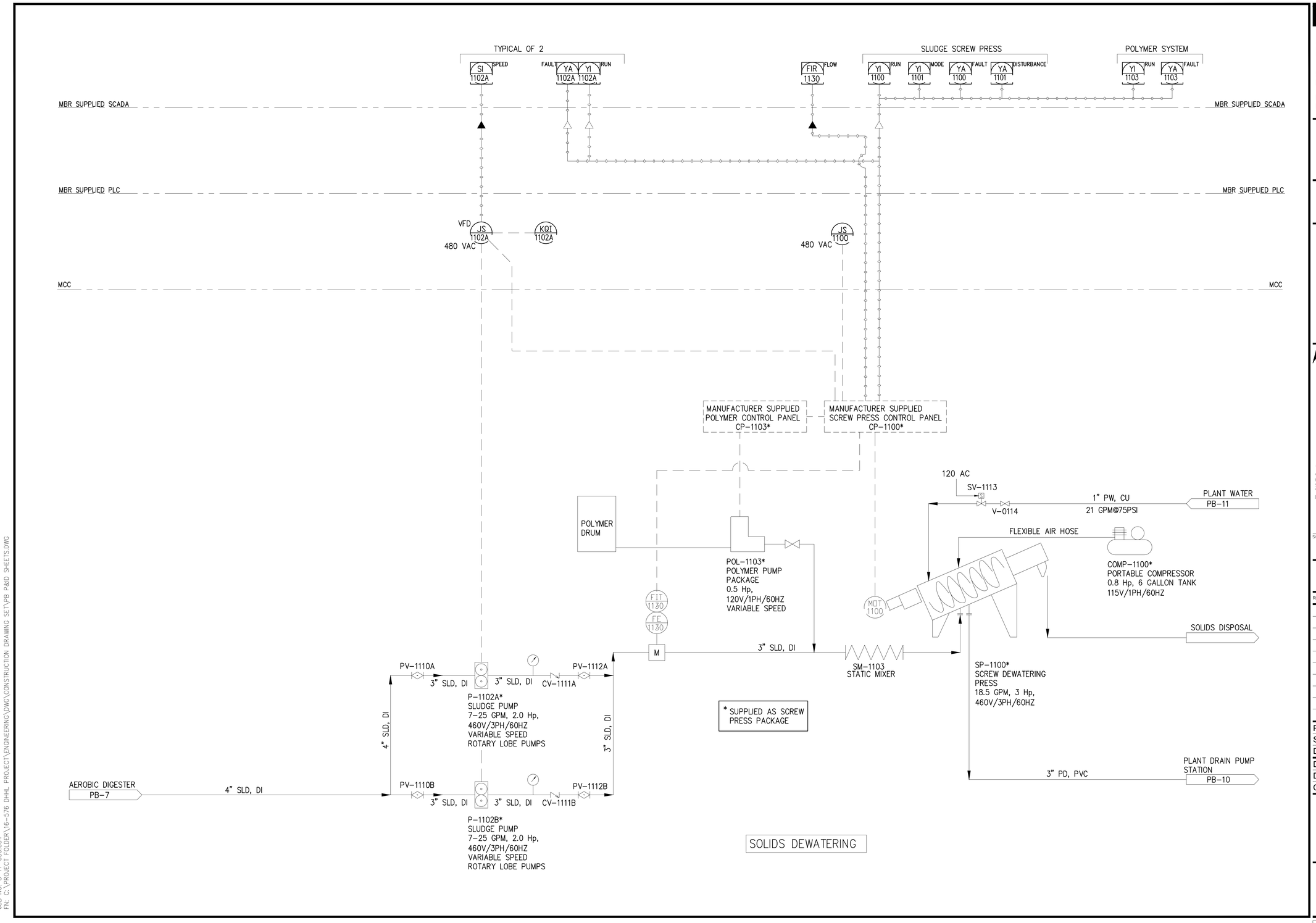

JOB NO. O-11-056.004
FN: C:\PROJECT FOLDER\16-576 DHHL PROJECT\ENGINEERING\DWG\CONSTRUCTION DRAWING SET\PB P&ID SHEETS.DWG

AustinTsutsumi & ASSOCIATES, INC.
CIVIL ENGINEERS I SURVEYORS
HONOLULU I WAILUKU I HILO, HAWAII

501 SUMNER STREET, SUITE 521
HONOLULU, HAWAII 96817

PHONE: 808-533-3646
FAX: 808-526-1267

STATE OF HAWAII
DEPARTMENT OF
HAWAIIAN HOME LANDS

PŪLEHUNUI
REGIONAL
INFRASTRUCTURE

AUSTIN, TSUTSUMI & ASSOC., INC.
ENGINEERS, SUVEYORS • HONOLULU, HAWAII

BRYAN H. KOBA
LICENSED PROFESSIONAL ENGINEER
No. 14948
HAWAII U.S.A.

This work was prepared by me or under my supervision and construction of this project will be under my observation. (Observation of construction as defined in Chapter 16-115 Subchapter 1 Definitions of the Hawaii Administrative Rules "Professional Engineers, Architects, Surveyors, and Landscape Architects.")

SIGNATURE APRIL 30, 2020
EXP. DATE OF THE LICENSE

0 1 2
LINE IS 2 INCHES AT FULL SIZE
(If NOT 2-inches : Scale Accordingly)

REVISION	DATE	BRIEF	BY

Project No:	16-576
Scale:	AS NOTED
Date:	1/31/2020
Designed By:	BHK
Drawn By:	BHK
Checked By:	

SOLIDS DEWATERING

DWG. NO.
PB-8

SHEET 117 OF 201

FILE	POCKET	FOLDER	NO.

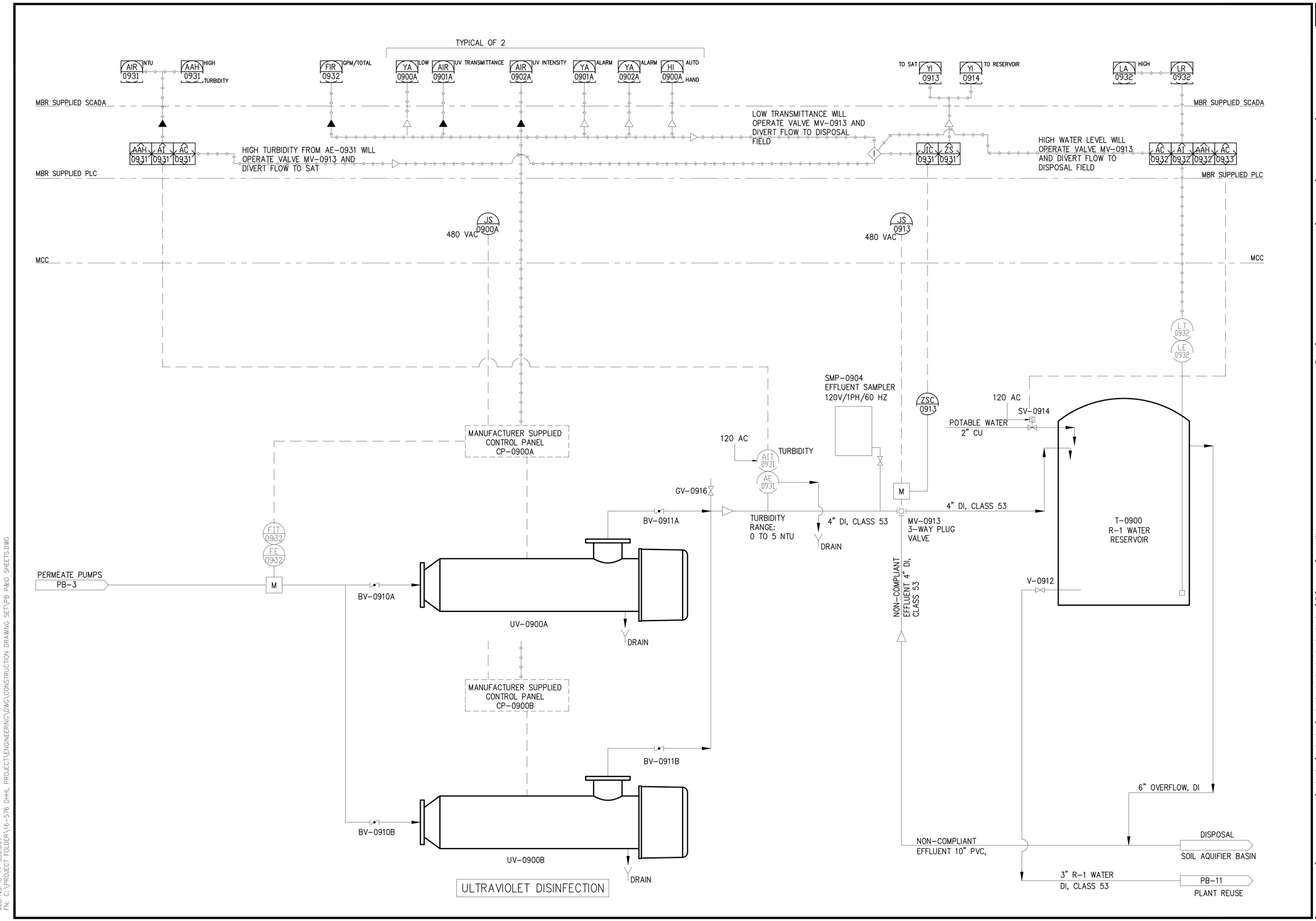

JOB NO. O-11-056.004
FN: C:\PROJECT FOLDER\16-576 DHHL PROJECT\ENGINEERING\DWG\CONSTRUCTION DRAWING SET\PB P&ID SHEETS.DWG

AustinTsutsumi & ASSOCIATES, INC.
CIVIL ENGINEERS I SURVEYORS
HONOLULU I WAILUKU I HILO, HAWAII

501 SUMNER STREET, SUITE 521
HONOLULU, HAWAII 96817

PHONE: 808-533-3646
FAX: 808-526-1267

STATE OF HAWAII
DEPARTMENT OF
HAWAIIAN HOME LANDS

PŪLEHUNUI
REGIONAL
INFRASTRUCTURE

AUSTIN, TSUTSUMI & ASSOC., INC.
ENGINEERS, SUVEYORS • HONOLULU, HAWAII

BRYAN H. KOBA
LICENSED PROFESSIONAL ENGINEER
No. 14948
HAWAII U.S.A.

This work was prepared by me or under my supervision and construction of this project will be under my observation. (Observation of construction as defined in Chapter 16-115 Subchapter 1 Definitions of the Hawaii Administrative Rules "Professional Engineers, Architects, Surveyors, and Landscape Architects.")

SIGNATURE APRIL 30, 2020 EXP. DATE OF THE LICENSE

0 1 2
LINE IS 2 INCHES AT FULL SIZE
(If NOT 2-inches : Scale Accordingly)

REVISION	DATE	BRIEF	BY

Project No:	16-576
Scale:	AS NOTED
Date:	1/31/2020
Designed By:	BHK
Drawn By:	BHK
Checked By:	

UV DISINFECTION SYSTEM

DWG. NO.
PB-9

SHEET 118 OF 201

FILE	POCKET	FOLDER	NO.

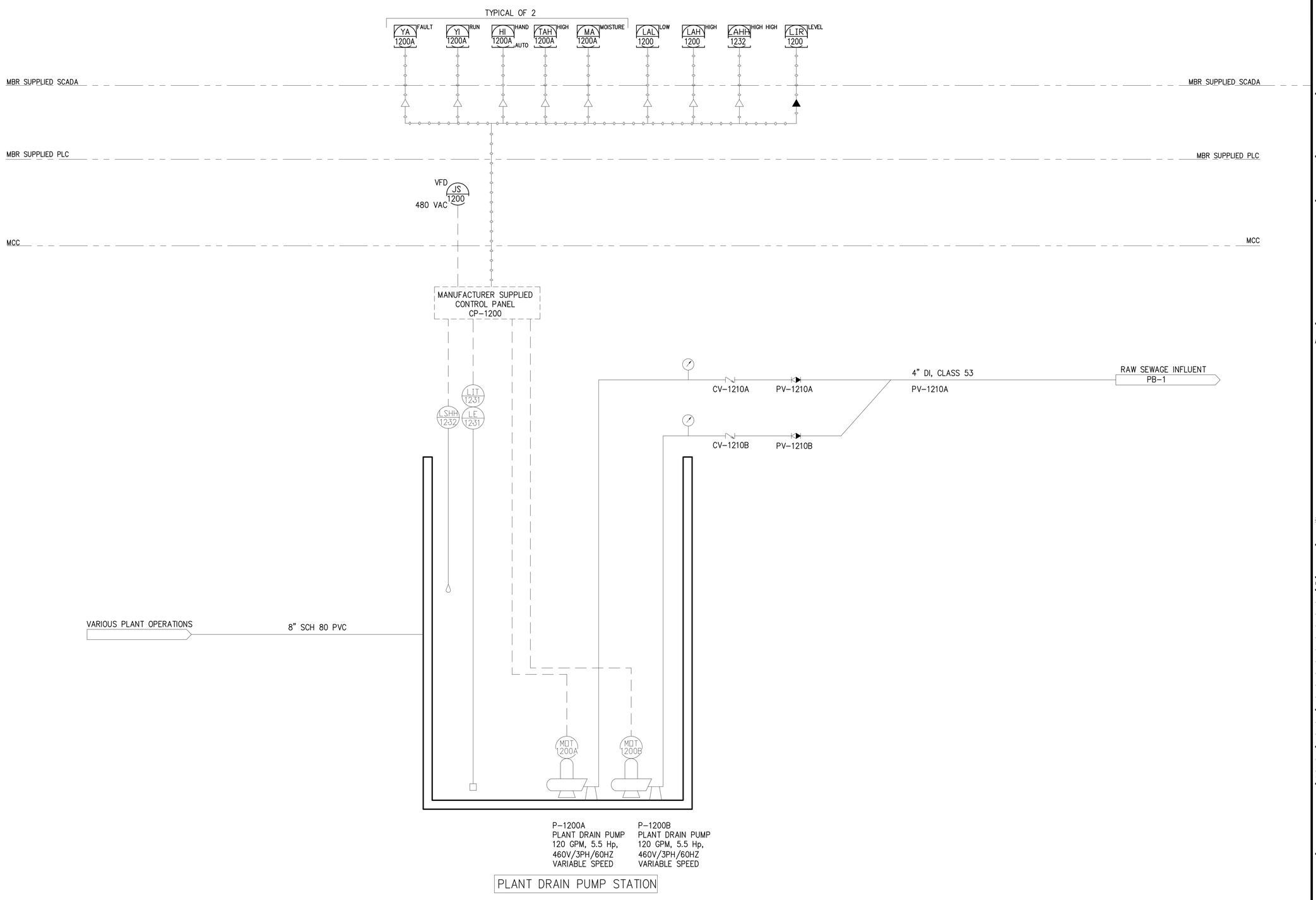

JOB NO. 0-11-056.004
FN: C:\PROJECT FOLDER\16-576 DHHL PROJECT\ENGINEERING\DWG\CONSTRUCTION DRAWING SET\PB P&ID SHEETS.DWG

AustinTsutsumi & ASSOCIATES, INC.
CIVIL ENGINEERS I SURVEYORS
HONOLULU I WAILUKU I HILO, HAWAII

501 SUMNER STREET, SUITE 521
HONOLULU, HAWAII 96817

PHONE: 808-533-3646
FAX: 808-526-1267

STATE OF HAWAII
DEPARTMENT OF
HAWAIIAN HOME LANDS

PŪLEHUNUI
REGIONAL
INFRASTRUCTURE

AUSTIN, TSUTSUMI & ASSOC., INC.
ENGINEERS, SUVEYORS • HONOLULU, HAWAII

BRYAN H. KOBA
LICENSED PROFESSIONAL ENGINEER
No. 14948
HAWAII U.S.A.

This work was prepared by me or under my supervision and construction of this project will be under my observation. (Observation of construction as defined in Chapter 16-115 Subchapter 1 Definitions of the Hawaii Administrative Rules "Professional Engineers, Architects, Surveyors, and Landscape Architects.")

SIGNATURE APRIL 30, 2020 EXP. DATE OF THE LICENSE

0 1 2
LINE IS 2 INCHES AT FULL SIZE
(If NOT 2-inches : Scale Accordingly)

REVISION	DATE	BRIEF	BY

Project No:	16-576
Scale:	AS NOTED
Date:	1/31/2020
Designed By:	BHK
Drawn By:	BHK
Checked By:	

PLANT DRAIN PUMP STATION

DWG. NO.

PB-10

SHEET 119 OF 201

FILE	POCKET	FOLDER	NO.

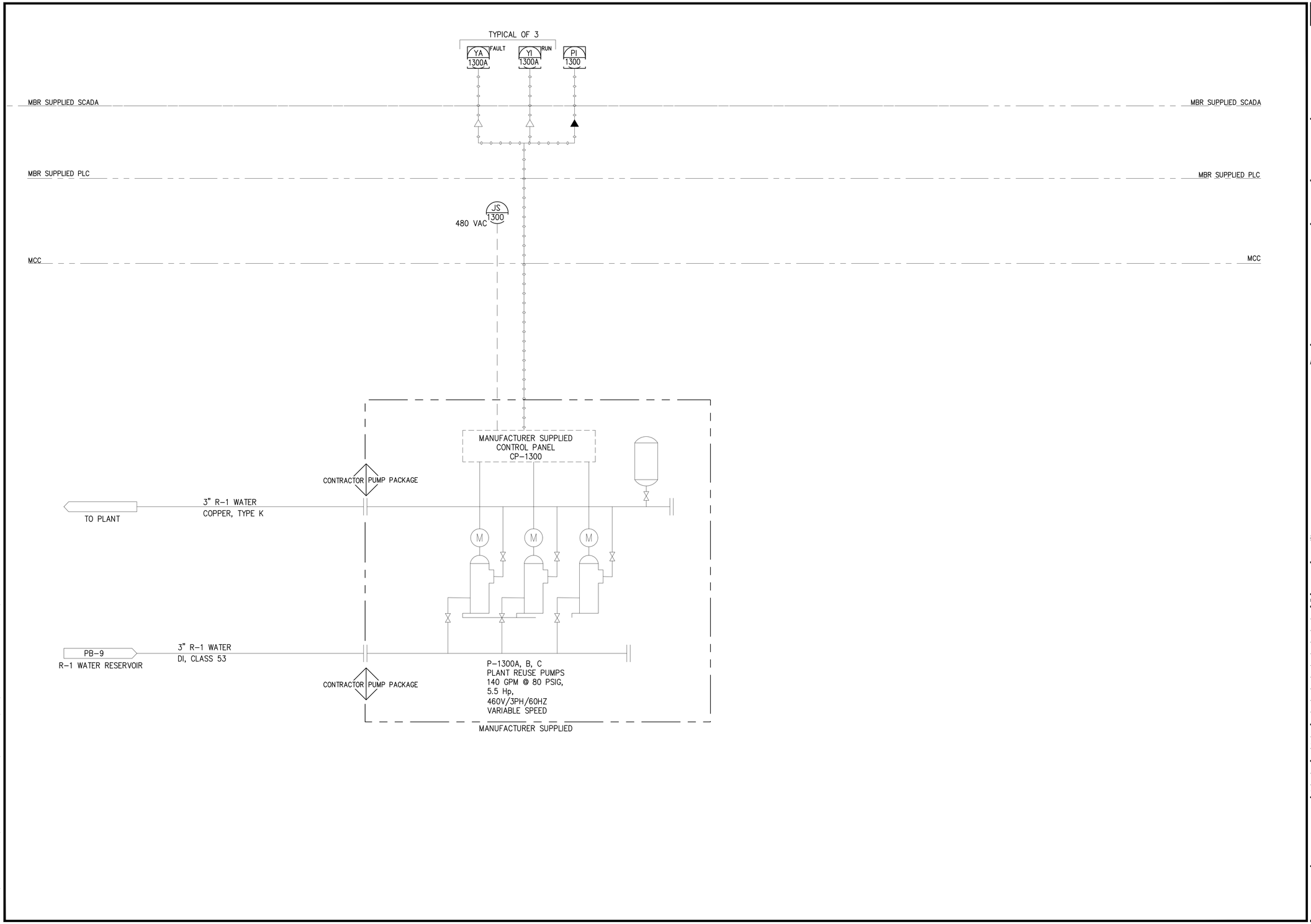

JOB NO. O-11-056.004
FN: C:\PROJECT FOLDER\16-576 DHHL PROJECT\ENGINEERING\DWG\CONSTRUCTION DRAWING SET\PB P&ID SHEETS.DWG

AustinTsutsumi
& ASSOCIATES, INC.
CIVIL ENGINEERS I SURVEYORS
HONOLULU I WAILUKU I HILO, HAWAII

501 SUMNER STREET, SUITE 521
HONOLULU, HAWAII 96817

PHONE: 808-533-3646
FAX: 808-526-1267

STATE OF HAWAII
DEPARTMENT OF
HAWAIIAN HOME LANDS

PŪLEHUNUI
REGIONAL
INFRASTRUCTURE

AUSTIN, TSUTSUMI & ASSOC., INC.
ENGINEERS, SUVEYORS • HONOLULU, HAWAII

BRYAN H. KOBA
LICENSED PROFESSIONAL ENGINEER
No. 14948
HAWAII U.S.A.

This work was prepared by me or under my supervision and construction of this project will be under my observation. (Observation of construction as defined in Chapter 16-115 Subchapter 1 Definitions of the Hawaii Administrative Rules "Professional Engineers, Architects, Surveyors, and Landscape Architects.")

SIGNATURE — APRIL 30, 2020 EXP. DATE OF THE LICENSE

0 1 2
LINE IS 2 INCHES AT FULL SIZE
(If NOT 2-inches : Scale Accordingly)

REVISION	DATE	BRIEF	BY

Project No:	16-576
Scale:	AS NOTED
Date:	1/31/2020
Designed By:	BHK
Drawn By:	BHK
Checked By:	

PLANT REUSE PUMPS

DWG. NO.

PB-11

SHEET 120 OF 201

FILE	POCKET	FOLDER	NO.

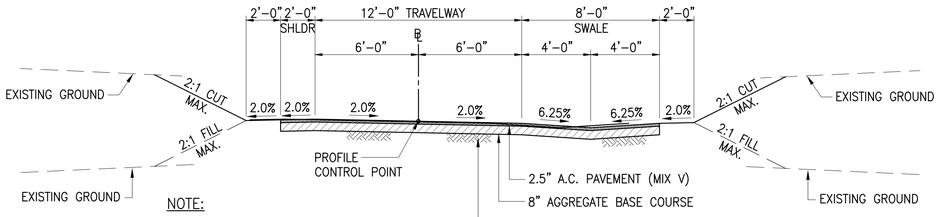

NOTE:

1. PAVEMENT SECTION SHALL CONSIST OF 2.5" ASPHALTIC CONCRETE OVER 10" AGGREGATE BASE COURSE AT WWTP ACCESS ROAD STA. 45+00 TO STA. 55+00

22' WIDE ROAD SECTION (A / DC-1)

SCALE: NOT TO SCALE

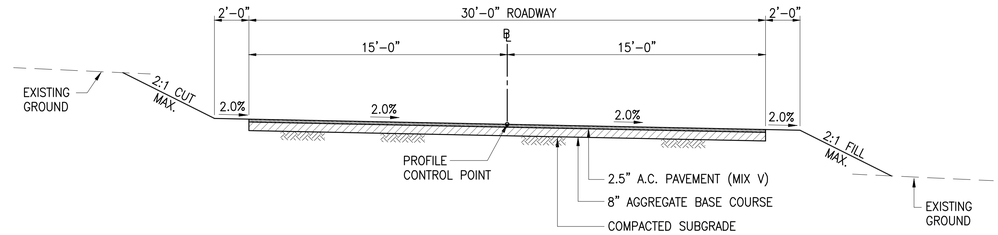

30' WIDE ROAD SECTION (B / DC-1)

SCALE: NOT TO SCALE

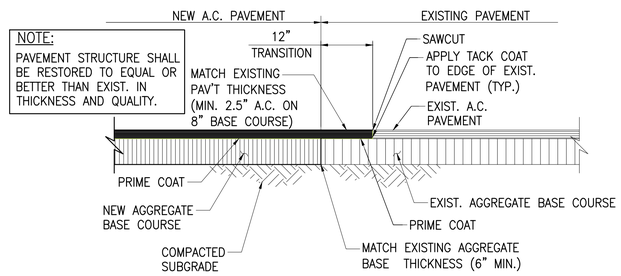

NOTE:
PAVEMENT STRUCTURE SHALL BE RESTORED TO EQUAL OR BETTER THAN EXIST. IN THICKNESS AND QUALITY.

ASPHALT CONNECTION DETAIL (C / DC-1)

NOT TO SCALE

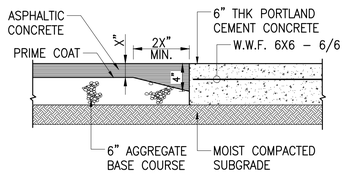

ASPHALT TO CONC TRANSITION DETAIL (D / DC-1)

NOT TO SCALE

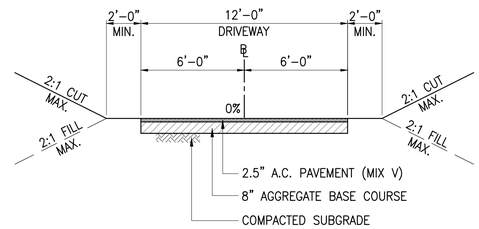

12' WIDE DRIVEWAY SECTION (E / DC-1)

SCALE: NOT TO SCALE

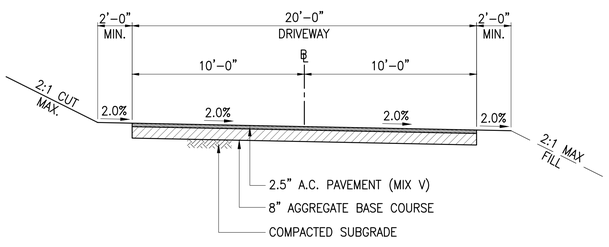

20' WIDE DRIVEWAY SECTION (F / DC-1)

SCALE: NOT TO SCALE

NOTE:

FOR PARKING AREAS, PAVEMENT SECTION SHALL CONSIST OF 2.0" ASPHALTIC CONCRETE OVER 6.0" AGGREGATE BASE COURSE.

NOT TO SCALE

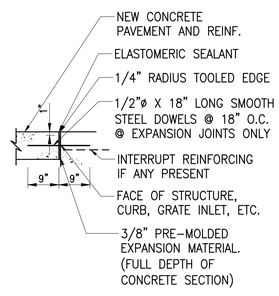

EXPANSION JOINT

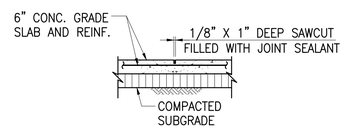

SPECIAL NOTE:
SAW CUTS SHALL BE MADE WITHIN 24 HOURS OF PLACEMENT OF GRADE SLAB CONC.

NOTE: 10' MAX. OR AS SHOWN

SAWCUT TRANSVERSE JOINT

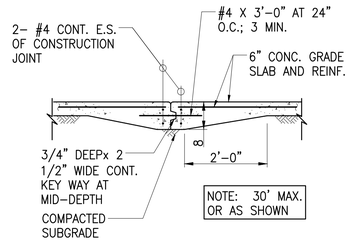

NOTE: 30' MAX. OR AS SHOWN

CONSTRUCTION JOINT

CONCRETE JOINT DETAIL (G / DC-1)

NOT TO SCALE

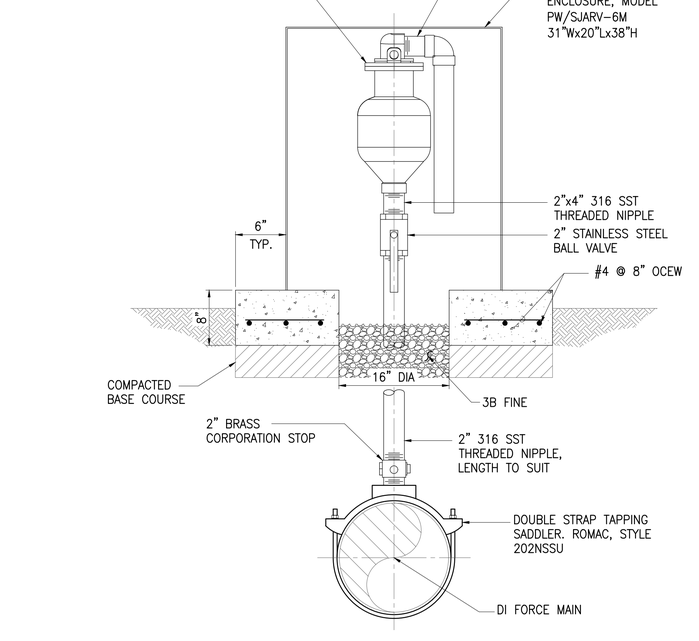

2" AIR/VACUUM VALVE DETAIL (H / DC-1)

NOT TO SCALE

AustinTsutsumi & ASSOCIATES, INC.
CIVIL ENGINEERS I SURVEYORS
HONOLULU I WAILUKU I HILO, HAWAII

501 SUMNER STREET, SUITE 521
HONOLULU, HAWAII 96817

PHONE: 808-533-3646
FAX: 808-526-1267

STATE OF HAWAII
DEPARTMENT OF HAWAIIAN HOME LANDS

PŪLEHUNUI REGIONAL INFRASTRUCTURE

AUSTIN, TSUTSUMI & ASSOC., INC.
ENGINEERS, SUVEYORS • HONOLULU, HAWAII

BRYAN H. KOBA
LICENSED PROFESSIONAL ENGINEER
No. 14948
HAWAII U.S.A.

This work was prepared by me or under my supervision and construction of this project will be under my observation. (Observation of construction as defined in Chapter 16-115 Subchapter 1 Definitions of the Hawaii Administrative Rules "Professional Engineers, Architects, Surveyors, and Landscape Architects.")

SIGNATURE — APRIL 30, 2020 EXP. DATE OF THE LICENSE

0 1 2
LINE IS 2 INCHES AT FULL SIZE
(IF NOT 2–inches : Scale Accordingly)

REVISION	DATE	BRIEF	BY

Project No:	16-576
Scale:	AS NOTED
Date:	1/31/2020
Designed By:	BHK
Drawn By:	BHK
Checked By:	

MISCELLANEOUS CIVIL DETAILS – 1

DWG. NO.
DC-1

SHEET 121 OF 201

FILE	POCKET	FOLDER	NO.

JOB NO. O-11-056.004
FN: C:\PROJECT FOLDER\16-576 DHHL PROJECT\ENGINEERING\DWG\CONSTRUCTION DRAWING SET\DC-1 MISCELLANEOUS CIVIL DETAILS – 1.DWG

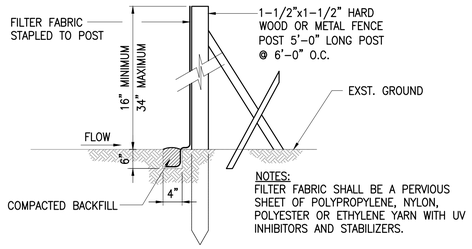

NOTES:
FILTER FABRIC SHALL BE A PERVIOUS SHEET OF POLYPROPYLENE, NYLON, POLYESTER OR ETHYLENE YARN WITH UV INHIBITORS AND STABILIZERS.

SECTION

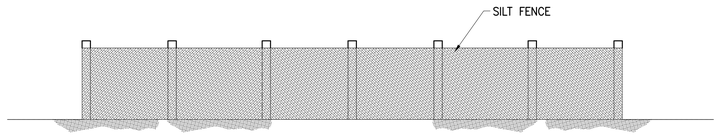

ELEVATION

DETAIL SILT FENCE (A / DC-2)
NOT TO SCALE

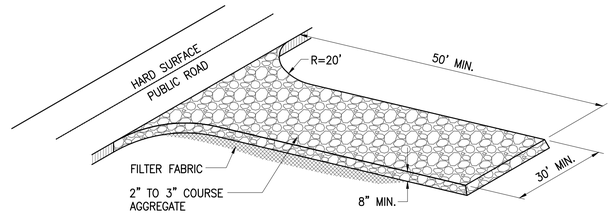

STABILIZED CONSTRUCTION ENTRANCE (B / DC-2)
NOT TO SCALE

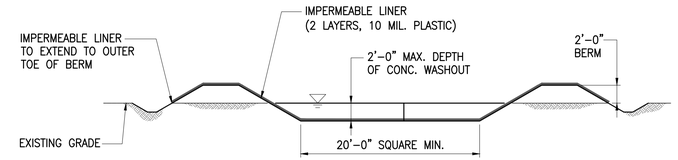

NOTE:
WASHOUT TO BE INSPECTED, CLEANED AND LINER CHANGED ONCE FILLED TO 75% CAPACITY. RESIDUAL WASTE AND LINER TO BE REMOVED AND HAULED TO APPROVED CONSTRUCTION WASTE LANDFILL.

CONCRETE WASHOUT (C / DC-2)
NOT TO SCALE

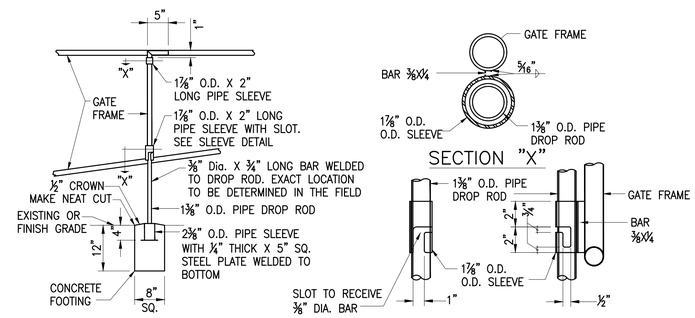

ELEVATION — FRONT ELEV. — SIDE ELEV.

SLEEVE DETAIL

DROP ROD DETAIL "B"
NOT TO SCALE

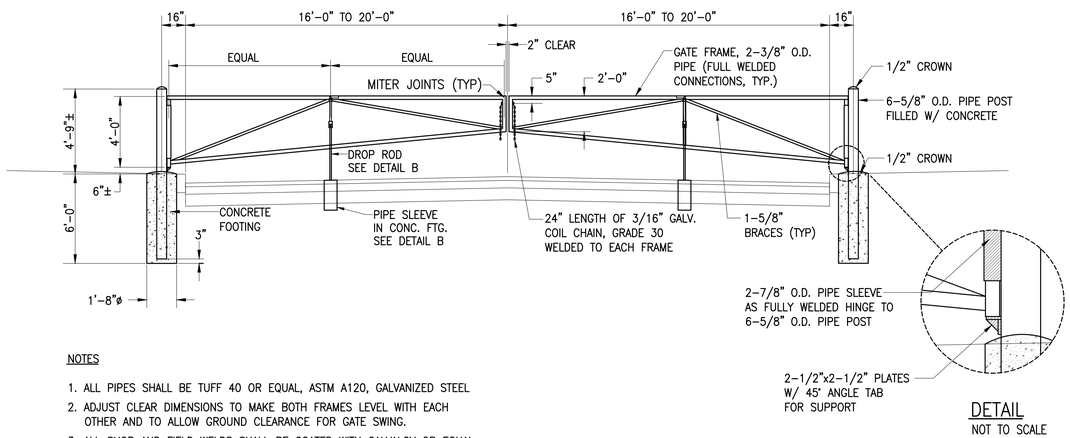

DETAIL
NOT TO SCALE

NOTES

1. ALL PIPES SHALL BE TUFF 40 OR EQUAL, ASTM A120, GALVANIZED STEEL
2. ADJUST CLEAR DIMENSIONS TO MAKE BOTH FRAMES LEVEL WITH EACH OTHER AND TO ALLOW GROUND CLEARANCE FOR GATE SWING.
3. ALL SHOP AND FIELD WELDS SHALL BE COATED WITH GALVALOY OR EQUAL
4. GATE SHALL HAVE THE CAPACITY TO OPEN 180 DEGREES.
5. WRAP REFLECTIVE TAPE AROUND ENTIRE NEW PIPE FRAME GATES AND POSTS (EXCEPT AT WELDED CONNECTIONS). ALTERNATE 12" BANDS OF RED AND SILVER TAPE.

PIPE GATE DETAIL (D / DC-2)
NOT TO SCALE

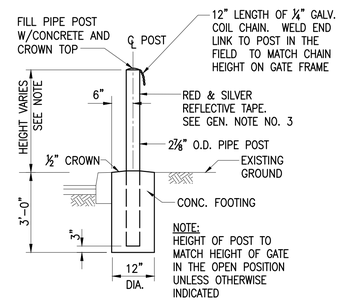

NOTE:
HEIGHT OF POST TO MATCH HEIGHT OF GATE IN THE OPEN POSITION UNLESS OTHERWISE INDICATED

GENERAL NOTES

1. CONCRETE SHALL BE CLASS "A".
2. ALL WELDS SHALL BE GROUND SMOOTH.
3. WRAP REFLECTIVE TAPE AROUND ENTIRE NEW PIPE FRAME GATES AND POSTS (EXCEPT AT WELDED CONNECTIONS). ALTERNATE 12" BNADS OF RED AND SILVER TAPE. REFLECTIVE TAPE SHALL BE SCOTCHLITE BRAND REFLECTIVE SHEETING HIGH INTENSITY GRAGE HIGH TACK PRESSURE SENSITIVE (RED-MODEL NO. 5872, SILVER-MODEL NO. 5870) OR APPROVED EQUAL.
4. ADJUST DIMENSION TO MAKE GATE FRAME LEVEL TO EACH OTHER.
5. PROVIDE 2 PADLOCKS FOR EACH PAIR OF DOUBLE SWING GATES, PADLOCKS SHALL BE KEYED ALIKE. LOCKS SHALL BE MASTERED-KEYED TO THE SCHOOL'S SYSTEM UNLESS OTHERWISE INDICATED.
6. HAND EXCAVATE FOR POST FOOTINGS NEAR EXISTING UNDERGROUND UTILITIES

GATE STOP POST DETAIL
NOT TO SCALE

AustinTsutsumi & ASSOCIATES, INC.
CIVIL ENGINEERS I SURVEYORS
HONOLULU I WAILUKU I HILO, HAWAII
501 SUMNER STREET, SUITE 521
HONOLULU, HAWAII 96817
PHONE: 808-533-3646
FAX: 808-526-1267

STATE OF HAWAII
DEPARTMENT OF HAWAIIAN HOME LANDS

PŪLEHUNUI REGIONAL INFRASTRUCTURE

AUSTIN, TSUTSUMI & ASSOC., INC.
ENGINEERS, SURVEYORS • HONOLULU, HAWAII

BRYAN H. KOBA — LICENSED PROFESSIONAL ENGINEER No. 14948 — HAWAII U.S.A.

This work was prepared by me or under my supervision and construction of this project will be under my observation. (Observation of construction as defined in Chapter 16-115 Subchapter 1 Definitions of the Hawaii Administrative Rules "Professional Engineers, Architects, Surveyors, and Landscape Architects.")

SIGNATURE — APRIL 30, 2020 EXP. DATE OF THE LICENSE

0 1 2
LINE IS 2 INCHES AT FULL SIZE
(If NOT 2-inches : Scale Accordingly)

REVISION	DATE	BRIEF	BY

Project No:	16-576
Scale:	AS NOTED
Date:	1/31/2020
Designed By:	BHK
Drawn By:	BHK
Checked By:	

MISCELLANEOUS CIVIL DETAILS – 2

DWG. NO.
DC-2

FILE	POCKET	FOLDER	NO.

JOB NO. O-11-056.004
FN: Z:\2018\18-524 (16-576 PULEHUNUI NORTH SEWER_PHASE 6.3 WASTEWATER TREATMENT FACILITY) BRYAN\DWG\DC-2 MISCELLANEOUS CIVIL DETAILS - 2.DWG

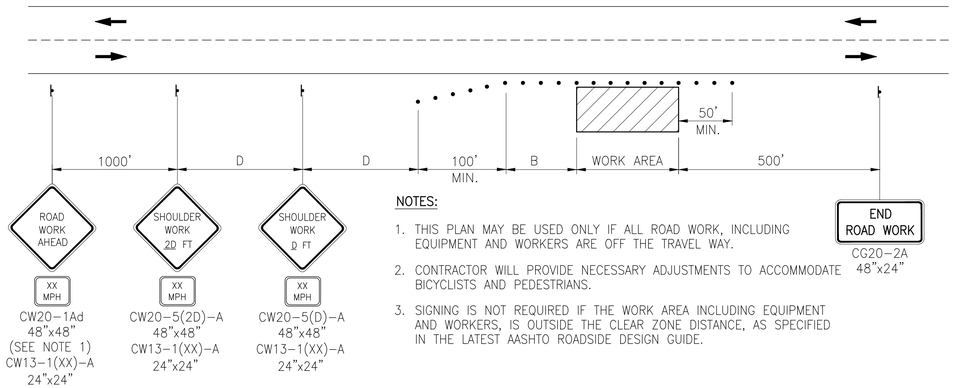

NOTES:

1. THIS PLAN MAY BE USED ONLY IF ALL ROAD WORK, INCLUDING EQUIPMENT AND WORKERS ARE OFF THE TRAVEL WAY.
2. CONTRACTOR WILL PROVIDE NECESSARY ADJUSTMENTS TO ACCOMMODATE BICYCLISTS AND PEDESTRIANS.
3. SIGNING IS NOT REQUIRED IF THE WORK AREA INCLUDING EQUIPMENT AND WORKERS, IS OUTSIDE THE CLEAR ZONE DISTANCE, AS SPECIFIED IN THE LATEST AASHTO ROADSIDE DESIGN GUIDE.

WORK ON SHOULDER OR ROADSIDE

TRAFFIC CONTROL PLAN

NOT TO SCALE

"TABLE I FOR TRAFFIC CONTROL PLAN"

POSTED SPEED LIMIT (MPH)	SIGN SPACING (D) (FEET)	TAPER LENGTH (T) (FEET)		LONGITUDINAL BUFFER SPACE (B) (FEET)	SPACING OF CONES OR DELINEATORS (FEET)②		
		W =12' OR LESS ②	W = GREATER THAN 12'①		TAPER	TANGENT	WORK AREA③
20	250	200	W x 17	35	20	20	10
25	250	200	W x 17	55	25	25	10
30	250	250	W x 20	85	30	30	10
35	250	250	W x 20	120	35	35	10
40	500	350	W x 30	170	40	40	10
45	500	550	W x 45	220	45	45	10
50	1000	600	W x 50	280	50	50	10
55	1000	700	W x 55	335	55	55	10

NOTES

① USE ADVISORY SPEEDS WHEN POSTED
② W= WIDTH OF LANE OR OFFSET
③ NOT APPLICABLE FOR "TWO-LANE HIGHWAYS"

GENERAL TRAFFIC CONTROL NOTES:

1. THE PERMITTEE SHALL MAKE MINOR ADJUSTMENTS AT INTERSECTIONS, DRIVEWAYS, BRIDGES, STRUCTURES, ETC., TO FIT ACTUAL FIELD CONDITIONS.
2. CONES OR DELINEATORS SHALL BE EXTENDED TO A POINT WHERE THEY ARE VISIBLE TO APPROACHING TRAFFIC.
3. TRAFFIC CONTROL DEVICES SHALL BE INSTALLED SUCH THAT THE SIGN OR DEVICE FARTHEST FROM THE WORK AREAS SHALL BE PLACED FIRST. THE OTHERS SHALL THEN BE PLACED PROGRESSIVELY TOWARD THE WORK AREA.
4. REGULATORY AND WARNING SIGNS WITHIN THE CONSTRUCTION ZONE THAT ARE IN CONFLICT WITH THE TRAFFIC CONTROL PLANS SHALL BE REMOVED OR COVERED. ALL SIGNS SHALL BE RESTORED UPON COMPLETION OF THE WORK.
5. FLAGGERS AND/OR POLICE OFFICERS SHALL BE IN SIGHT OF EACH OTHER OR IN DIRECT COMMUNICATION AT TIMES.
6. WHEN REQUIRED BY THE ISSUING OFFICE, THE PERMITTEE SHALL INSTALL A FLASHING ARROW SIGNAL AS SHOWN ON THE TRAFFIC CONTROL PLANS.
7. SIGNS SPACINGS (D), TAPER LENGTHS (T) AND SPACINGS OF CONES OR DELINEATORS SHALL BE AS SHOWN IN TABLE 1, UNLESS OTHERWISE NOTED ON THE TRAFFIC CONTROL PLANS.
8. TRAFFIC LANES SHALL BE A MINIMUM OF 10' WIDE.
9. ALL CONSTRUCTION WARNING SIGNS SHALL BE PROMPTLY REMOVED OR COVERED WHENEVER THE MESSAGE IS NOT APPLICABLE OR NOT IN USE.
10. THE BACKS OF ALL SIGNS USED FOR TRAFFIC CONTROL SHALL BE APPROPRIATELY COVERED TO PRECLUDE THE DISPLAY OF INAPPLICABLE SIGN MESSAGES (i.e., WHEN SIGNS HAVE MESSAGES ON BOTH FACES).
11. AT THE END OF EACH DAY'S WORK, OR AS SOON AS THE WORK IS COMPLETED, THE PERMITTEE SHALL REMOVE ALL TRAFFIC CONTROL DEVICES NO LONGER NEEDED TO PERMIT FREE AND SAFE PASSAGE OF PUBLIC TRAFFIC. REMOVAL SHALL BE IN THE REVERSE ORDER OF INSTALLATION. REPLACE EXISTING FADED OR OBLITERATED PAVEMENT MARKINGS THAT ARE NECESSARY FOR SAFE TRAFFIC FLOW IN THE CONSTRUCTION AREA WITH TEMPORARY OR PERMANENT MARKINGS BEFORE OPENING THE ROADWAY TO PUBLIC TRAFFIC EACH DAY.
12. REPLACE PERMANENT PAVEMENT MARKINGS AND TRAFFIC SIGN UPON COMPLETION OF EACH PHASE OF WORK.
13. THE CONTRACTOR SHALL CONTROL TRAFFIC IN AND OUT OF DRIVEWAYS.
14. TRAFFIC CONTROL SHALL BE IN ACCORDANCE WITH PART VI, STANDARDS AND GUIDES FOR TRAFFIC CONTROLS FOR STREET AND HIGHWAY CONSTRUCTION, MAINTENANCE, UTILITY, AND INCIDENT MANAGEMENT OPERATIONS, OF THE MANUAL ON UNIFORM TRAFFIC CONTROL DEVICES, (MUTCD) 2009 EDITION.

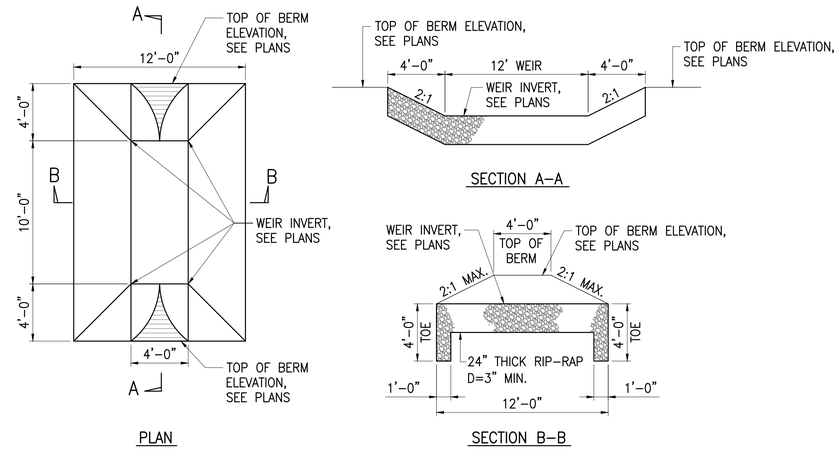

OVERFLOW WEIR DETAIL (A / DC-3)

NOT TO SCALE

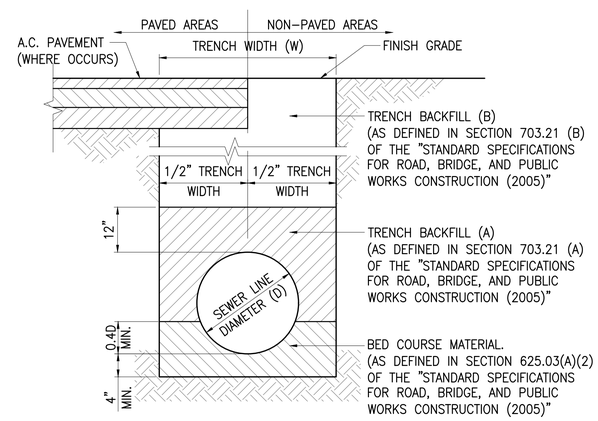

TYPICAL TRENCH SECTION PVC SEWERLINE (B / DC-3)

NOT TO SCALE

NOTES:

1. TRENCH BACKFILL SHALL CONFORM TO SECTION 703, "AGGREGATES" OF THE "STANDARD SPECIFICATIONS FOR ROAD, BRIDGE, AND PUBLIC WORKS CONSTRUCTION (2005)" AND BED COURSE MATERIAL.
2. INSTALLATION OF SEWERLINES SHALL CONFORM TO SECTION 625, "SEWER SYSTEM" OF THE "STANDARD SPECIFICATIONS FOR ROAD, BRIDGE, AND PUBLIC WORKS CONSTRUCTION (2005)".
3. TRENCH WIDTHS SHALL CONFORM TO TABLE 625-1 OF THE "STANDARD SPECIFICATIONS FOR ROAD, BRIDGE, AND PUBLIC WORKS CONSTRUCTION (2005)".
4. LOAD IMPOSED BY CONSTRUCTION VEHICLES WITH AXLE LOADS IN EXCESS OF THE AASHTO HS-20-44 VEHICLE (32,000 LBS/AXE) SHOULD BE MINIMIZED BY DESIGNATED CONSTRUCTION VEHICLE CROSSING. ADDITIONAL FILL SHOULD BE PLACED OVER THE SEWERLINES AT THE DESIGNATED CONSTRUCTION VEHICLE CROSSING IN STRICT ACCORDANCE WITH THE MANUFACTURER'S RECOMMENDATIONS, OR STRUTTING TO SUPPORT THE PIPE SHOULD BE PLACED IN ACCORDANCE WITH THE CURRENT "STANDARD SPECIFICATIONS FOR ROAD, BRIDGE, AND PUBLIC WORKS CONSTRUCTION (2005)". ALL SEWERLINES DAMAGED BY CONSTRUCTION VEHICLE LOADING SHALL BE REPLACED AT THE CONTRACTOR'S EXPENSE.
5. PVC PIPE AND FITTINGS SHALL CONFORM TO SDR 26.

AustinTsutsumi & ASSOCIATES, INC.
CIVIL ENGINEERS I SURVEYORS
HONOLULU I WAILUKU I HILO, HAWAII
501 SUMNER STREET, SUITE 521
HONOLULU, HAWAII 96817
PHONE: 808-533-3646
FAX: 808-526-1267

STATE OF HAWAII
DEPARTMENT OF HAWAIIAN HOME LANDS

PŪLEHUNUI REGIONAL INFRASTRUCTURE

AUSTIN, TSUTSUMI & ASSOC., INC.
ENGINEERS, SURVEYORS • HONOLULU, HAWAII

BRYAN H. KOBA LICENSED PROFESSIONAL ENGINEER No. 14948 HAWAII U.S.A.

This work was prepared by me or under my supervision and construction of this project will be under my observation. (Observation of construction as defined in Chapter 16-115 Subchapter 1 Definitions of the Hawaii Administrative Rules "Professional Engineers, Architects, Surveyors, and Landscape Architects.")

SIGNATURE — APRIL 30, 2020 EXP. DATE OF THE LICENSE

0 1 2
LINE IS 2 INCHES AT FULL SIZE
(if NOT 2-inches : Scale Accordingly)

REVISION	DATE	BRIEF	BY

Project No:	16-576
Scale:	AS NOTED
Date:	1/31/2020
Designed By:	BHK
Drawn By:	BHK
Checked By:	

MISCELLANEOUS CIVIL DETAILS – 3

DWG. NO.
DC-3

FILE	POCKET	FOLDER	NO.

JOB NO. 0-11-056.004
FN: Z:\2018\18-524 (16-576 PULEHUNUI NORTH SEWER_PHASE 6.3 WASTEWATER TREATMENT FACILITY) BRYAN\DWG\DC-3 MISCELLANEOUS CIVIL DETAILS - 3.DWG

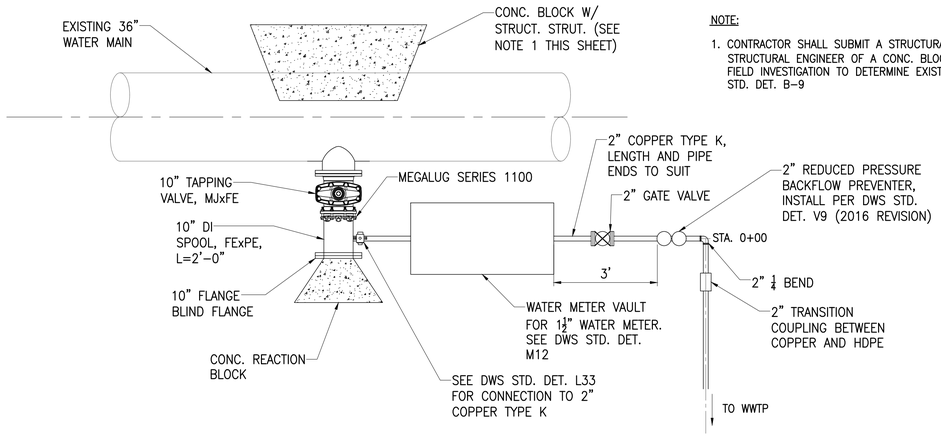

NOTE:

1. CONTRACTOR SHALL SUBMIT A STRUCTURAL DESIGN PREPARED BY A LICENSED STRUCTURAL ENGINEER OF A CONC. BLOCK WITH STRUCTURE THRUST AFTER FIELD INVESTIGATION TO DETERMINE EXISTING SOIL CONDITION. REFER TO DWS STD. DET. B-9

CONNECTION TO EW36 DETAIL (A / DC-4)

SCALE: NOT TO SCALE

AustinTsutsumi & ASSOCIATES, INC.
CIVIL ENGINEERS I SURVEYORS
HONOLULU I WAILUKU I HILO, HAWAII

501 SUMNER STREET, SUITE 521
HONOLULU, HAWAII 96817

PHONE: 808-533-3646
FAX: 808-526-1267

STATE OF HAWAII
DEPARTMENT OF HAWAIIAN HOME LANDS

PŪLEHUNUI REGIONAL INFRASTRUCTURE

AUSTIN, TSUTSUMI & ASSOC., INC.
ENGINEERS, SUVEYORS • HONOLULU, HAWAII

BRYAN H. KOBA
LICENSED PROFESSIONAL ENGINEER
No. 14948
HAWAII U.S.A.

This work was prepared by me or under my supervision and construction of this project will be under my observation. (Observation of construction as defined in Chapter 16-115 Subchapter 1 Definitions of the Hawaii Administrative Rules "Professional Engineers, Architects, Surveyors, and Landscape Architects.")

SIGNATURE — APRIL 30, 2020 EXP. DATE OF THE LICENSE

0 1 2
LINE IS 2 INCHES AT FULL SIZE
(If NOT 2-inches : Scale Accordingly)

REVISION	DATE	BRIEF	BY

Project No:	16-576
Scale:	AS NOTED
Date:	1/31/2020
Designed By:	BHK
Drawn By:	BHK
Checked By:	

MISCELLANEOUS CIVIL DETAILS – 4

DWG. NO.
DC-4

SHEET 124 OF 201

FILE	POCKET	FOLDER	NO.

JOB NO. 0-11-056.004
FN: Z:\2018\18-524 (16-576 PULEHUNUI NORTH SEWER_PHASE 6.3 WASTEWATER TREATMENT FACILITY) BRYAN\DWG\DC-4 MISCELLANEOUS CIVIL DETAILS - 4.DWG

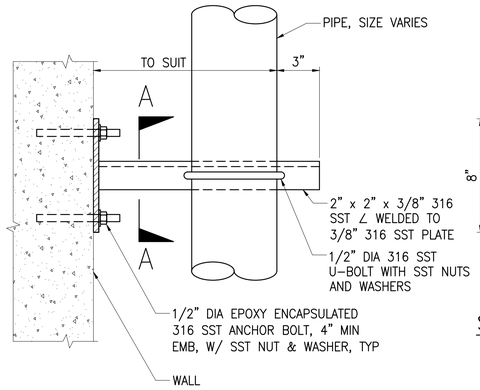

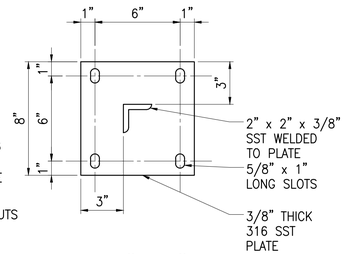

SECTION "A–A"

PIPE SUPPORT "A" (A / DM–1)
NOT TO SCALE

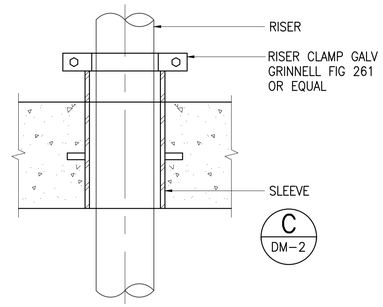

PIPE SUPPORT "B" (B / DM–1)
NOT TO SCALE

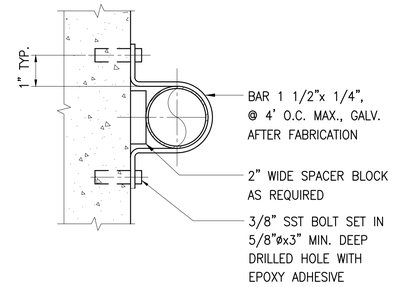

PIPE SUPPORT "C" (C / DM–1)
NOT TO SCALE

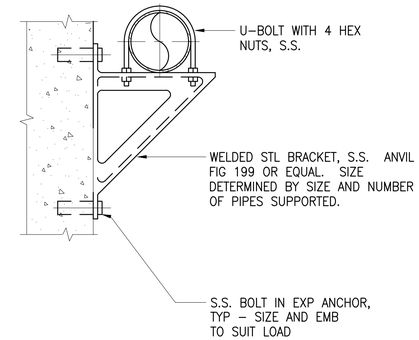

PIPE SUPPORT "D" (D / DM–1)
NOT TO SCALE

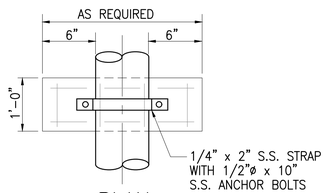

PLAN

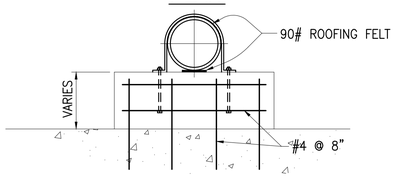

SECTION

PIPE SUPPORT "E" (E / DM–1)
NOT TO SCALE

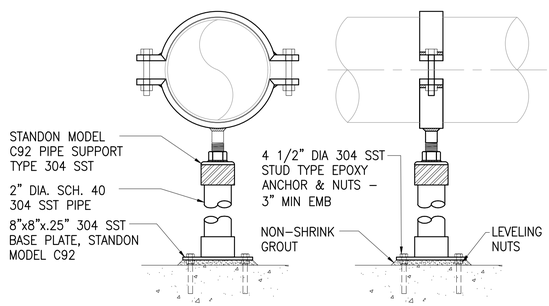

PIPE SUPPORT "F" (F / DM–1)
NOT TO SCALE

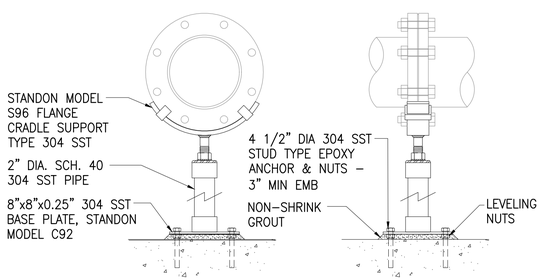

PIPE SUPPORT "G" (G / DM–1)
NOT TO SCALE

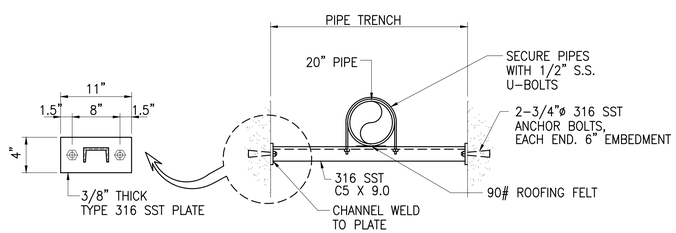

PIPE SUPPORT "H" (H / DM–1)
NOT TO SCALE

AustinTsutsumi & ASSOCIATES, INC.
CIVIL ENGINEERS I SURVEYORS
HONOLULU I WAILUKU I HILO, HAWAII

501 SUMNER STREET, SUITE 521
HONOLULU, HAWAII 96817

PHONE: 808-533-3646
FAX: 808-526-1267

STATE OF HAWAII
DEPARTMENT OF
HAWAIIAN HOME LANDS

PŪLEHUNUI
REGIONAL
INFRASTRUCTURE

AUSTIN, TSUTSUMI & ASSOC., INC.
ENGINEERS, SUVEYORS • HONOLULU, HAWAII

BRYAN H. KOBA
LICENSED PROFESSIONAL ENGINEER
No. 14948
HAWAII U.S.A.

This work was prepared by me or under my supervision and construction of this project will be under my observation. (Observation of construction as defined in Chapter 16-115 Subchapter 1 Definitions of the Hawaii Administrative Rules "Professional Engineers, Architects, Surveyors, and Landscape Architects.")

SIGNATURE — APRIL 30, 2020 EXP. DATE OF THE LICENSE

0 1 2
LINE IS 2 INCHES AT FULL SIZE
(If NOT 2-inches : Scale Accordingly)

REVISION	DATE	BRIEF	BY

Project No:	16-576
Scale:	AS NOTED
Date:	1/31/2020
Designed By:	BHK
Drawn By:	BHK
Checked By:	

MISCELLANEOUS MECHANICAL DETAILS – 1

DWG. NO.
DM-1

SHEET 125 OF 201

FILE	POCKET	FOLDER	NO.

JOB NO. O-11-056.004
FN: C:\PROJECT FOLDER\16-576 DHHL PROJECT\ENGINEERING\DWG\CONSTRUCTION DRAWING SET\DM-1 MISCELLANEOUS MECHANICAL DETAILS - 1.DWG

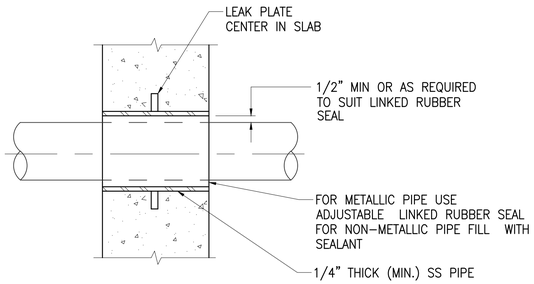

WALL SLEEVE (A) DM-2
NOT TO SCALE

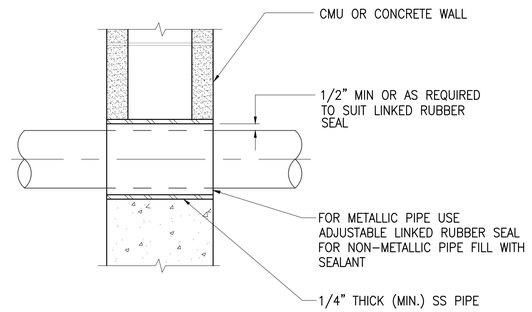

WALL SLEEVE (B) DM-2
NOT TO SCALE

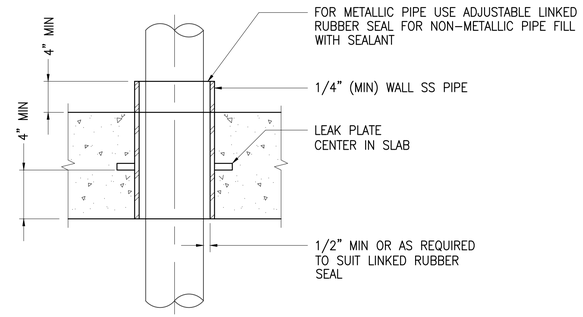

FLOOR SLEEVE (C) DM-2
NOT TO SCALE

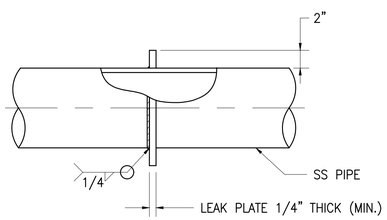

LEAK PLATE (D) DM-2
NOT TO SCALE

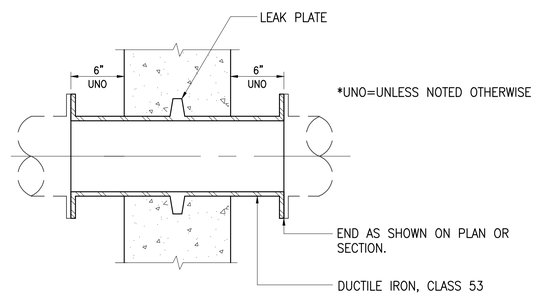

WALL PIPE (E) DM-2
NOT TO SCALE

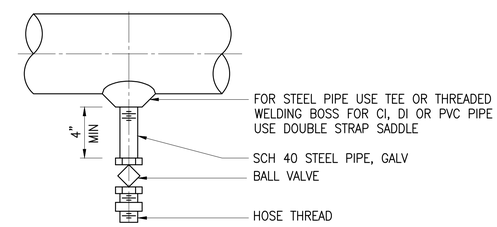

PIPE DRAIN (F) DM-2
NOT TO SCALE

AustinTsutsumi
& ASSOCIATES, INC.
CIVIL ENGINEERS I SURVEYORS
HONOLULU I WAILUKU I HILO, HAWAII

501 SUMNER STREET, SUITE 521
HONOLULU, HAWAII 96817

PHONE: 808-533-3646
FAX: 808-526-1267

STATE OF HAWAII
DEPARTMENT OF
HAWAIIAN HOME LANDS

PŪLEHUNUI
REGIONAL
INFRASTRUCTURE

AUSTIN, TSUTSUMI & ASSOC., INC.
ENGINEERS, SUVEYORS • HONOLULU, HAWAII

BRYAN H. KOBA
LICENSED
PROFESSIONAL
ENGINEER
No. 14948
HAWAII U.S.A.

This work was prepared by me or under my supervision and construction of this project will be under my observation. (Observation of construction as defined in Chapter 16-115 Subchapter 1 Definitions of the Hawaii Administrative Rules "Professional Engineers, Architects, Surveyors, and Landscape Architects.")

SIGNATURE APRIL 30, 2020
EXP. DATE OF THE LICENSE

0 1 2
LINE IS 2 INCHES AT FULL SIZE
(If NOT 2-inches : Scale Accordingly)

REVISION	DATE	BRIEF	BY

Project No:	16-576
Scale:	AS NOTED
Date:	1/31/2020
Designed By:	BHK
Drawn By:	BHK
Checked By:	

MISCELLANEOUS
MECHANICAL
DETAILS – 2

DWG. NO.
DM-2

SHEET 126 OF 201

FILE	POCKET	FOLDER	NO.

JOB NO. O-11-056.004
FN: C:\PROJECT FOLDER\16-576 DHHL PROJECT\ENGINEERING\DWG\CONSTRUCTION DRAWING SET\DM-2 MISCELLANEOUS MECHANICAL DETAILS - 2.DWG

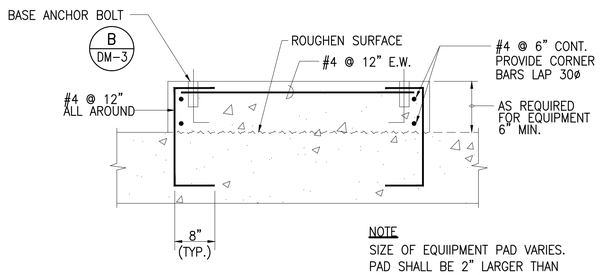

NOTE
SIZE OF EQUIIPMENT PAD VARIES.
PAD SHALL BE 2" LARGER THAN
EQUIPMENT BASE ON ALL SIDES.

EQUIPMENT PAD (A)
NOT TO SCALE — DM-3

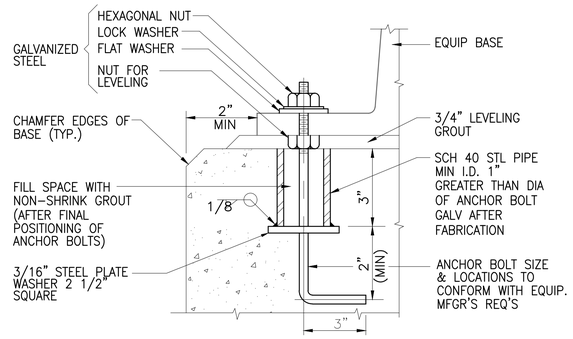

BASE ANCHOR BOLT (B)
NOT TO SCALE — DM-3

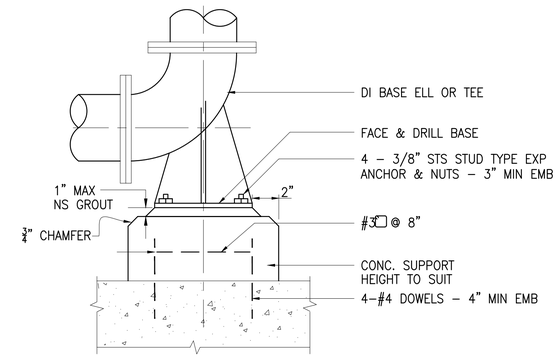

BASE BEND SUPPORT (C)
NOT TO SCALE — DM-3

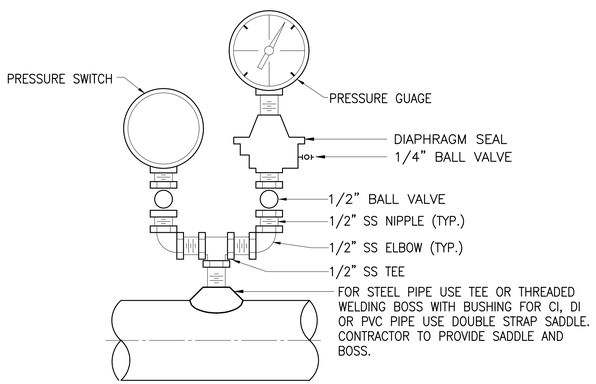

PRESSURE GAUGE AND SWITCH (D)
NOT TO SCALE — DM-3

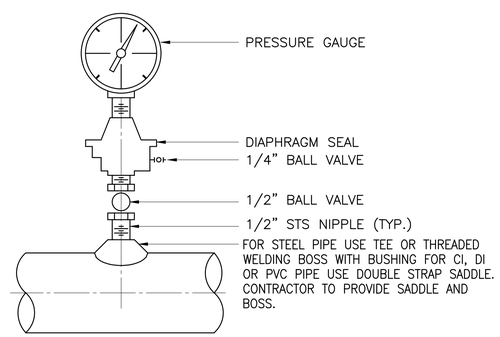

PRESSURE GAUGE (E)
NOT TO SCALE — DM-3

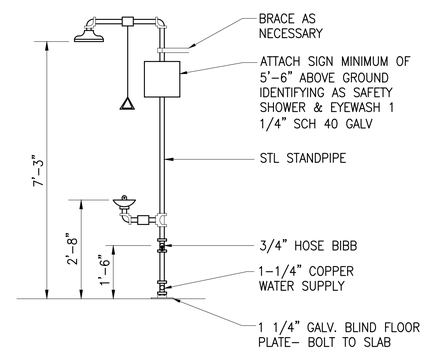

EMERGENCY SHOWER AND EYEWASH (X)
NOT TO SCALE — C-102

AustinTsutsumi
& ASSOCIATES, INC.
CIVIL ENGINEERS I SURVEYORS
HONOLULU I WAILUKU I HILO, HAWAII

501 SUMNER STREET, SUITE 521
HONOLULU, HAWAII 96817

PHONE: 808-533-3646
FAX: 808-526-1267

STATE OF HAWAII
DEPARTMENT OF
HAWAIIAN HOME LANDS

PŪLEHUNUI
REGIONAL
INFRASTRUCTURE

AUSTIN, TSUTSUMI & ASSOC., INC.
ENGINEERS, SUVEYORS • HONOLULU, HAWAII

BRYAN H. KOBA
LICENSED PROFESSIONAL ENGINEER
No. 14948
HAWAII U.S.A.

This work was prepared by me or under my supervision and construction of this project will be under my observation. (Observation of construction as defined in Chapter 16-115 Subchapter 1 Definitions of the Hawaii Administrative Rules "Professional Engineers, Architects, Surveyors, and Landscape Architects.")

SIGNATURE — APRIL 30, 2020 — EXP. DATE OF THE LICENSE

0 1 2
LINE IS 2 INCHES AT FULL SIZE
(If NOT 2-inches : Scale Accordingly)

REVISION	DATE	BREF	BY

Project No:	16-576
Scale:	AS NOTED
Date:	1/31/2020
Designed By:	BHK
Drawn By:	BHK
Checked By:	

MISCELLANEOUS
MECHANICAL
DETAILS – 3

DWG. NO.
DM-3

SHEET 127 OF 201

FILE	POCKET	FOLDER	NO.

JOB NO. O-11-056.004
FN: C:\PROJECT FOLDER\16-576 DHHL PROJECT\ENGINEERING\DWG\CONSTRUCTION DRAWING SET\DM-3 MISCELLANEOUS MECHANICAL DETAILS – 3.DWG

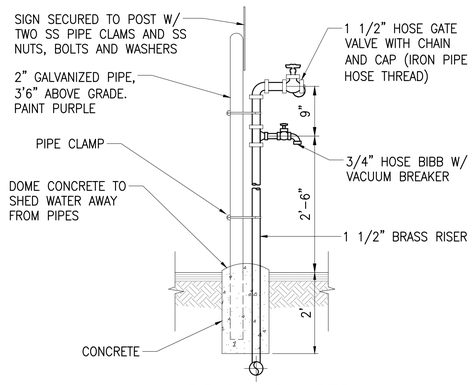

FIELD MOUNTED

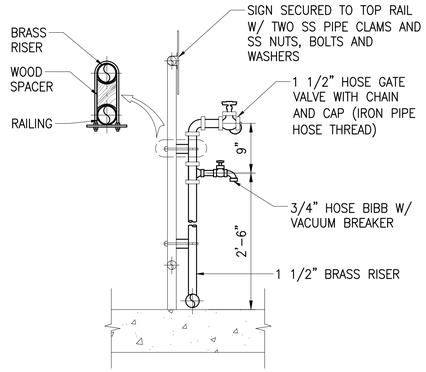

RAILING MOUNTED

NOTES:

1. VALVES SHALL BE RISING OR NON- RISING STEM DESIGN.
2. 3/4" HOSE BIBB AND 1½" GATE VALVE SHALL BE 90° APART
3. SIGN SHALL BE PLACED AT ALL NON-POTABLE WASHDOWN STATIONS AS SHOWN IN DETAIL "B" THIS SHEET.
4. A HOSE RACK SHALL BE SECURED NEAR WASHDOWN STATIONS WHERE INDICATED AND AS SHOWN IN DETAIL "C" THIS SHEET.
5. ALL PIPING AMD FITTING SHALL BE PAINTED PURPLE TO IDENTIFY AS REYCLED WATER. DO NOT PAINT VALVES AND HOSE BIBBS.

1½" WASHDOWN STANDPIPE DETAIL (A / DM-4)

NOT TO SCALE

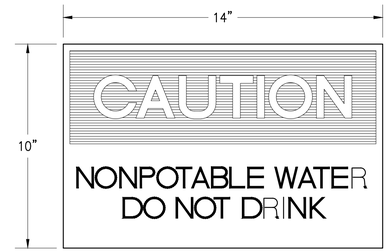

NOTES:

1. COLORS AND LETTER SIZES TO BE PER OSHA STANDARDS FOR CAUTION SIGNS.
2. PROVIDE THIS SIGN AT ALL HOSE BIBB LOCATIONS WHERE WATER IS NONPOTABLE.
3. SIGNS SHALL BE SHEET ALUMINUM ALLOY 6061T6, 0.063 THICK
4. SECURE SIGNS TO WALL USING 4-SS STAINLESS STEEL SCREWS AND ANCHORS

HOSE BIBB SIGN (B / DM-4)

NOT TO SCALE

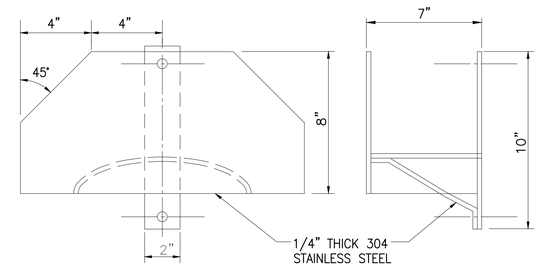

FRONT VIEW

SIDE VIEW

NOTE:

EACH HOSE RACK WILL BE SUPPLIED WITH 50' LONG 5/8" HEAVY DUTY HOSE.

HOSE RACK (C / DM-4)

NOT TO SCALE

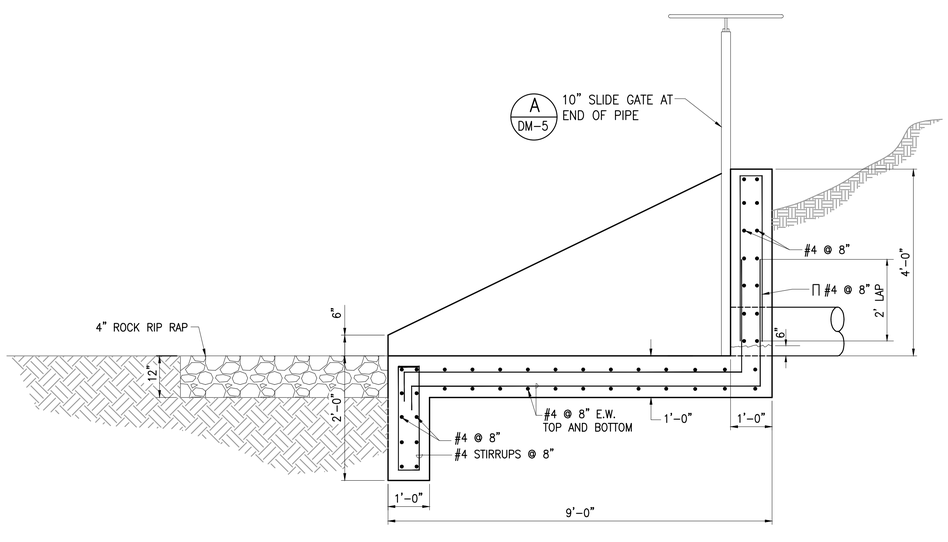

SAT HEADWALL DETAIL (D / DM-4)

NOT TO SCALE

AustinTsutsumi & ASSOCIATES, INC.
CIVIL ENGINEERS I SURVEYORS
HONOLULU I WAILUKU I HILO, HAWAII

501 SUMNER STREET, SUITE 521
HONOLULU, HAWAII 96817

PHONE: 808-533-3646
FAX: 808-526-1267

STATE OF HAWAII
DEPARTMENT OF
HAWAIIAN HOME LANDS

PŪLEHUNUI
REGIONAL
INFRASTRUCTURE

AUSTIN, TSUTSUMI & ASSOC., INC.
ENGINEERS, SUVEYORS • HONOLULU, HAWAII

BRYAN H. KOBA
LICENSED PROFESSIONAL ENGINEER
No. 14948
HAWAII U.S.A.

This work was prepared by me or under my supervision and construction of this project will be under my observation. (Observation of construction as defined in Chapter 16-115 Subchapter 1 Definitions of the Hawaii Administrative Rules "Professional Engineers, Architects, Surveyors, and Landscape Architects.")

SIGNATURE — APRIL 30, 2020 EXP. DATE OF THE LICENSE

0 1 2
LINE IS 2 INCHES AT FULL SIZE
(If NOT 2-inches : Scale Accordingly)

REVISION	DATE	BRIEF	BY

Project No:	16-576
Scale:	AS NOTED
Date:	1/31/2020
Designed By:	BHK
Drawn By:	BHK
Checked By:	

MISCELLANEOUS MECHANICAL DETAILS – 4

DWG. NO.

DM-4

SHEET 128 OF 201

FILE	POCKET	FOLDER	NO.

JOB NO. O-11-056.004
FN: C:\PROJECT FOLDER\16-576 DHHL PROJECT\ENGINEERING\DWG\CONSTRUCTION DRAWING SET\DM-4 MISCELLANEOUS MECHANICAL DETAILS - 4.DWG

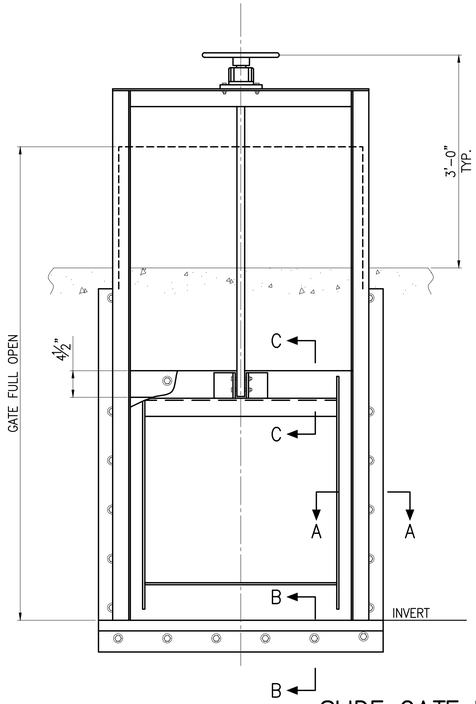

SLIDE GATE DETAIL (A / DM-5)
NOT TO SCALE

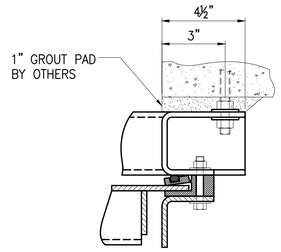

SECTION "A"

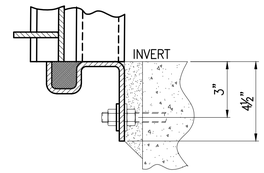

SECTION "B"

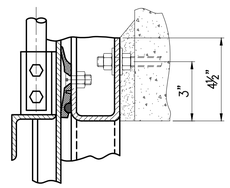

SECTION "C"

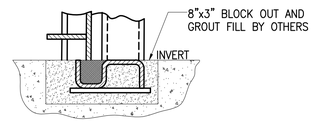

SECTION "B"–BOTTOM AT HEADWALL

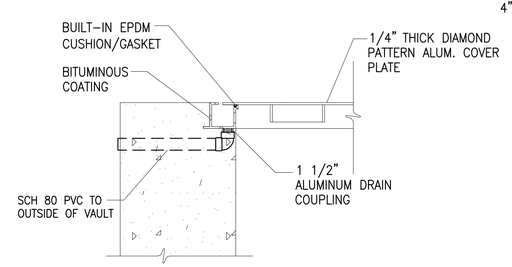

HATCH DRAIN DETAIL (C / DM-5)
NOT TO SCALE

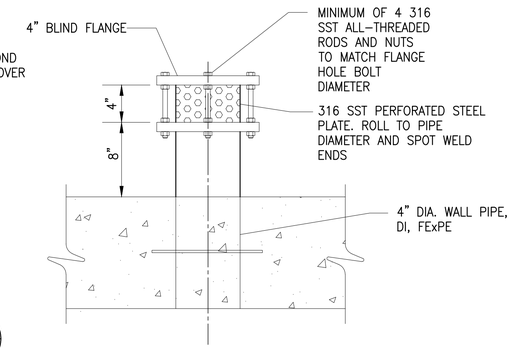

WET WELL VENT DETAIL (D / DM-5)
NOT TO SCALE

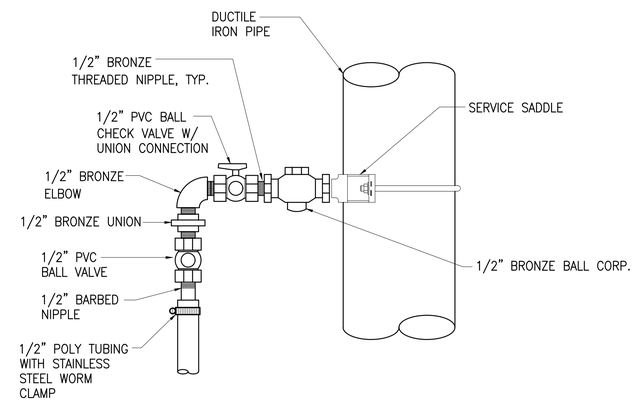

TURBIDITY AND SAMPLING CONNECTION (F / DM-5)
NOT TO SCALE

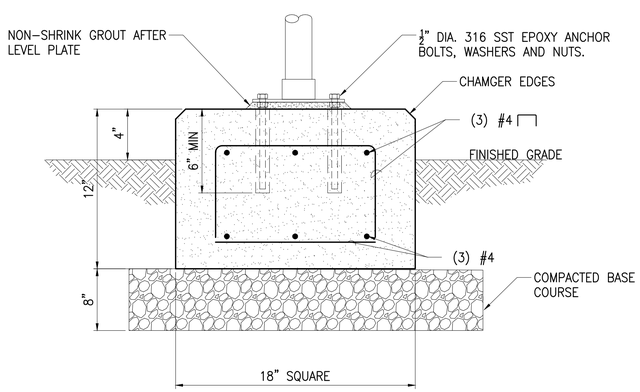

CONC. BASE PIPE SUPPORT (B / DM-5)
NOT TO SCALE

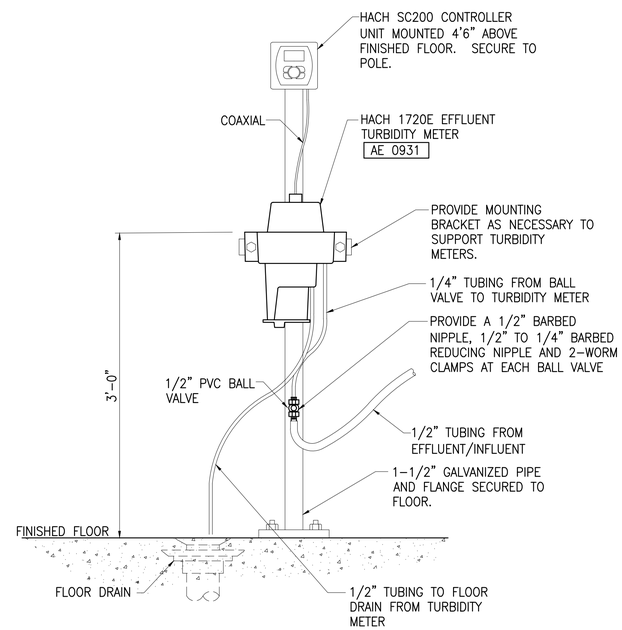

TURBIDITY METERS DETAIL (E / DM-5)
NOT TO SCALE

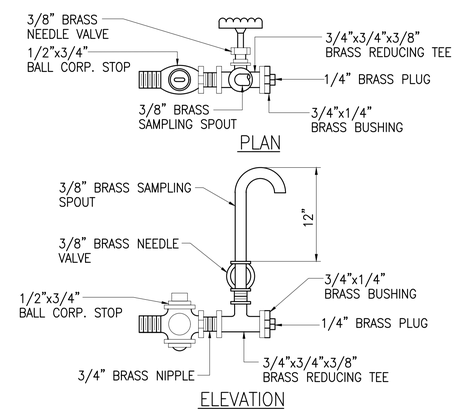

SECURED SAMPLE TAP (G / DM-5)
NOT TO SCALE

AustinTsutsumi & ASSOCIATES, INC.
CIVIL ENGINEERS I SURVEYORS
HONOLULU I WAILUKU I HILO, HAWAII
501 SUMNER STREET, SUITE 521
HONOLULU, HAWAII 96817
PHONE: 808-533-3646
FAX: 808-526-1267

STATE OF HAWAII
DEPARTMENT OF HAWAIIAN HOME LANDS

PŪLEHUNUI REGIONAL INFRASTRUCTURE

AUSTIN, TSUTSUMI & ASSOC., INC.
ENGINEERS, SUVEYORS • HONOLULU, HAWAII

BRYAN H. KOBA
LICENSED PROFESSIONAL ENGINEER
No. 14948
HAWAII U.S.A.

This work was prepared by me or under my supervision and construction of this project will be under my observation. (Observation of construction as defined in Chapter 16-115 Subchapter 1 Definitions of the Hawaii Administrative Rules "Professional Engineers, Architects, Surveyors, and Landscape Architects.")

SIGNATURE — APRIL 30, 2020 EXP. DATE OF THE LICENSE

0 1 2
LINE IS 2 INCHES AT FULL SIZE
(If NOT 2-inches : Scale Accordingly)

REVISION	DATE	BRIEF	BY

Project No:	16-576
Scale:	AS NOTED
Date:	1/31/2020
Designed By:	BHK
Drawn By:	BHK
Checked By:	

MISCELLANEOUS MECHANICAL DETAILS – 5

DWG. NO.
DM-5

FILE	POCKET	FOLDER	NO.

JOB NO. 0-11-056.004
FN: C:\PROJECT FOLDER\16-576 DHHL PROJECT\ENGINEERING\DWG\CONSTRUCTION DRAWING SET\DM-5 MISCELLANEOUS MECHANICAL DETAILS - 5.DWG

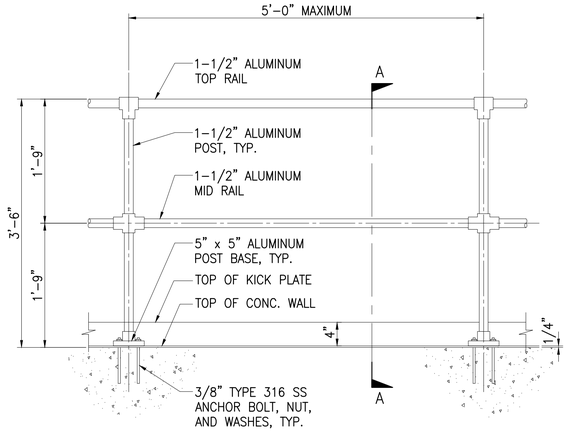

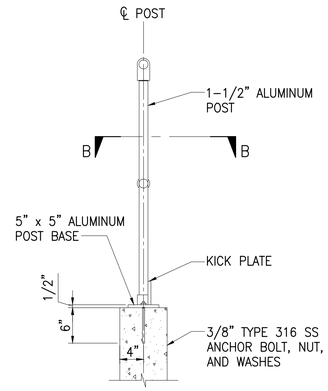

SECTION "A–A"

GUARDRAIL DETAIL (A / DM-6)

NOT TO SCALE

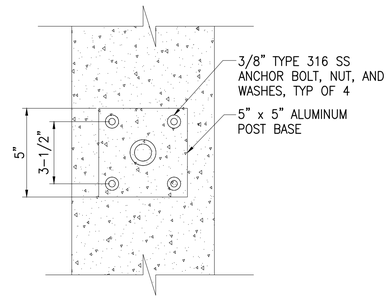

SECTION "B–B"

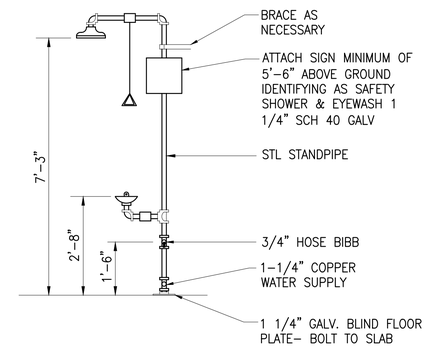

EMERGENCY SHOWER AND EYEWASH (C / DM-6)

NOT TO SCALE

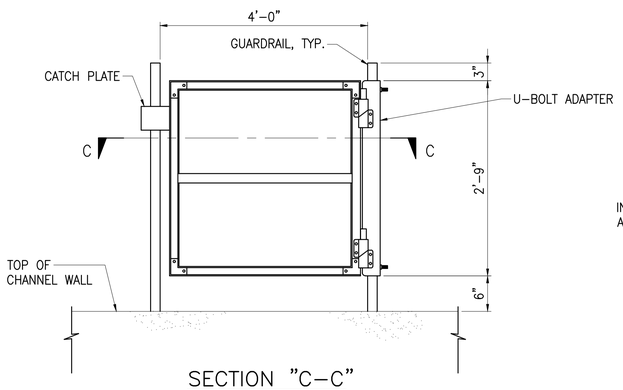

SECTION "C–C"

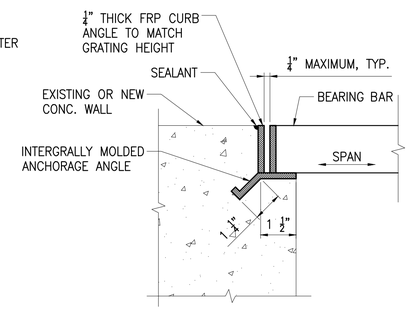

EMBEDDED GARTING SUPPORT SEAT DETAIL (D / DM-6)

NOT TO SCALE

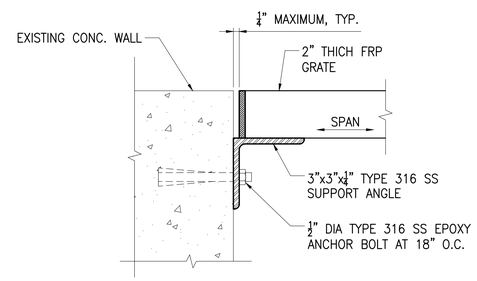

WALL MOUNTED GRATING SUPPORT SEAT DETAIL (E / DM-6)

NOT TO SCALE

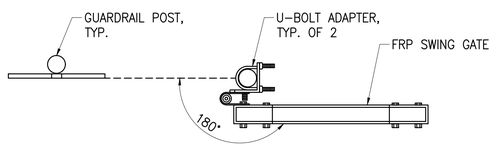

DOUBLE SWING GATE (B / DM-6)

NOT TO SCALE

AustinTsutsumi & ASSOCIATES, INC.
CIVIL ENGINEERS I SURVEYORS
HONOLULU I WAILUKU I HILO, HAWAII
501 SUMNER STREET, SUITE 521
HONOLULU, HAWAII 96817
PHONE: 808-533-3646
FAX: 808-526-1267

STATE OF HAWAII
DEPARTMENT OF HAWAIIAN HOME LANDS

PŪLEHUNUI REGIONAL INFRASTRUCTURE

AUSTIN, TSUTSUMI & ASSOC., INC.
ENGINEERS, SUVEYORS • HONOLULU, HAWAII

BRYAN H. KOBA
LICENSED PROFESSIONAL ENGINEER
No. 14948
HAWAII U.S.A.

This work was prepared by me or under my supervision and construction of this project will be under my observation. (Observation of construction as defined in Chapter 16-115 Subchapter 1 Definitions of the Hawaii Administrative Rules "Professional Engineers, Architects, Surveyors, and Landscape Architects.")

SIGNATURE APRIL 30, 2020
EXP. DATE OF THE LICENSE

0 1 2
LINE IS 2 INCHES AT FULL SIZE
(If NOT 2-inches : Scale Accordingly)

REVISION	DATE	BRIEF	BY

Project No:	16-576
Scale:	AS NOTED
Date:	1/31/2020
Designed By:	BHK
Drawn By:	BHK
Checked By:	

MISCELLANEOUS MECHANICAL DETAILS – 6

DWG. NO.
DM-6

SHEET 130 OF 201

FILE	POCKET	FOLDER	NO.

JOB NO. O-11-056.004
FN: C:\PROJECT FOLDER\16-576 DHHL PROJECT\ENGINEERING\DWG\CONSTRUCTION DRAWING SET\DM-6 MISCELLANEOUS MECHANICAL DETAILS – 6.DWG

GENERAL

1. ALL MATERIALS AND WORKMANSHIP SHALL CONFORM TO THE DRAWINGS AND SPECIFICATIONS.

2. THE STRUCTURAL, ARCHITECTURAL, CIVIL AND MECHANICAL DRAWINGS REPRESENT THE FINISHED STRUCTURE. THEY DO NOT INDICATE THE METHOD OF CONSTRUCTION. THE CONTRACTOR SHALL PROVIDE ALL MEASURES NECESSARY TO PROTECT THE STRUCTURE DURING CONSTRUCTION. SUCH MEASURES SHALL INCLUDE, BUT NOT BE LIMITED TO, BRACING, SHORING FOR LOADS DUE TO CONSTRUCTION EQUIPMENT, WIND, SEISMIC, ETC.

3. THE CONTRACTOR SHALL BE SOLELY RESPONSIBLE FOR ALL EXCAVATION PROCEDURES INCLUDING LAGGING, SHORING AND PROTECTION OF ADJACENT STRUCTURES, AND UTILITIES AND DE-WATERING AS NECESSARY.

4. THE CONTRACTOR SHALL BE SOLELY RESPONSIBLE FOR COORDINATING THE WORK OF ALL TRADES AND SHALL CHECK ALL DIMENSIONS. ALL DISCREPANCIES SHALL BE CALLED TO THE ATTENTION OF THE CONTRACTING OFFICER AND BE RESOLVED BEFORE PROCEEDING WITH THE WORK.

5. NOTES AND DETAILS ON DRAWINGS SHALL TAKE PRECEDENCE OVER GENERAL NOTES AND TYPICAL DETAILS.

6. SEE MECHANICAL, PLUMBING, AND ELECTRICAL DRAWINGS FOR SIZE AND LOCATION OF ALL OPENINGS REQUIRED FOR DUCTS, PIPES AND ALL PIPE SLEEVES, ELECTRICAL CONDUITS AND OTHER ITEMS TO BE EMBEDDED IN CONCRETE OR OTHERWISE INCORPORATED IN STRUCTURAL WORK.

7. CONSTRUCTION MATERIALS SHALL BE SPREAD OUT IF PLACED ON FRAMED ROOF. LOAD SHALL NOT EXCEED THE DESIGN LIVE LOAD PER SQUARE FOOT.

8. DESIGN CRITERIA:

   A. GENERAL STRUCTURAL DESIGN: 2012 INTERNATIONAL BUILDING CODE W/ STATE OF HAWAII AMENDMENTS

   B. DESIGN LIVE LOADS:

      ROOFS = 20 PSF
      SUSPENDED SLABS = 100 PSF OR EQUIPMENT WEIGHT
      STAIRS, WALKWAYS, CATWALKS = 100 PSF

   C. WIND (ASCE 7-10):

      BASIC WIND SPEED = 145 MPH
      EXPOSURE CATEGORY = C
      RISK CATEGORY = III
      TOPOGRAPHIC FACTOR, K_{ZT} = 1.1

   D. SEISMIC (IBC 2012):

      SOIL SITE CLASSIFICATION = C
      SEISMIC DESIGN CATEGORY = D
      DESIGN SPECTRAL ACCELERATION:
      S_{DS} = 0.657g
      S_{D1} = 0.259g
      IMPORTANCE FACTOR = 1.25
      RISK CATEGORY = III

SPECIAL INSPECTION

1. ALL SPECIAL INSPECTIONS SHALL BE DONE PER IBC SPECIAL INSPECTIONS PROVISIONS OF SECTION 1705 OF THE 2012 INTERNATIONAL BUILDING CODE GOVERNING PORTIONS OF THE STRUCTURAL WORK SHOWN IN THE STRUCTURAL DRAWINGS.

2. CONTRACTOR SHALL HIRE AND PAY FOR ALL CERTIFIED THIRD PARTY STRUCTURAL SPECIAL INSPECTIONS. THE CONTRACTOR SHALL HIRE AND PAY FOR ALL THIRD-PARTY TESTING AS REQUIRED PER SPECIFICATIONS. THE CONTRACTOR SHALL NOTIFY SPECIAL INSPECTOR AND TESTING AGENCY AT LEAST 72 HOURS IN ADVANCE FOR WORK TO BE PERFORMED REQUIRING SPECIAL INSPECTION. THE CONSTRUCTION OF THE FOLLOWING STRUCTURAL WORK SHALL REQUIRE SPECIAL INSPECTION:

   A. BOLTS INSTALLED IN CONCRETE = REQUIRED
   B. CAST-IN-PLACE CONCRETE = REQUIRED
   C. REINFORCING STEEL = REQUIRED
   D. ERECTION OF PRECAST CONCRETE = REQUIRED
   E. HIGH STRENGTH BOLTING = REQUIRED
   F. FIELD WELDING = REQUIRED
   G. MASONRY (LEVEL 1) = REQUIRED

3. SPECIAL INSPECTIONS DO NOT TAKE THE PLACE FOR CONTRACTOR'S QUALITY CONTROL MEASURES. SPECIAL INSPECTION DOES NOT RELIEVE THE GENERAL CONTRACTOR OF HIS RESPONSIBILITIES TO PERFORM QUALITY ASSURANCE AND QUALITY CONTROL, TO COMPLETE THE PROJECT IN ACCORDANCE WITH THE PLANS AND SPECIFICATIONS AND TO PROVIDE SAFETY ON THE JOB SITE. CONTRACTOR SHALL PROVIDE ACCESS FOR THE SPECIAL INSPECTOR SUCH AS LADDERS, SCAFFOLDING, FALL PROTECTION, MANLIFT, ETC. CONTRACTOR SHALL CORRECT DEFECTIVE WORK AT NO ADDITIONAL COST TO THE STATE AND PAY FOR ANY RE-INSPECTIONS ON NON-CONFORMING WORK.

FOUNDATION

1. FOUNDATION DESIGN IS BASED ON GEOLABS, INC. GEOTECHNICAL REPORT DATED NOVEMBER 25, 2019, "GEOTECHNICAL ENGINEERING EXPLORATION DHHL PULEHUNUI WASTEWATER SYSTEM."

   A. ALLOWABLE BEARING PRESSURES (DL+LL) = 3,000 PSF (WIND/SEISMIC 1/3 INCREASE ALLOWED)

   B. COEFFICIENT OF FRICTION = 0.35

   C. PASSIVE PRESSURE = 300 PCF

2. CONTRACTOR SHALL PROVIDE FOR DE-WATERING OF EXCAVATIONS FROM EITHER SURFACE WATER, GROUND WATER OR SEEPAGE AS NECESSARY.

3. TANK AND UNDERGROUND STRUCTURE FOUNDATIONS:

   A. SEE GEOTECHNICAL REPORT AND NOTES ON PLANS.

4. BUILDING AND SLAB-ON-GRADE FOUNDATION:

   A. FOOTING SUBGRADES SHALL BE RE-COMPACTED TO AT LEAST 90 PERCENT RELATIVE COMPACTION TO PROVIDE A RELATIVELY FIRM AND UNYIELDING SURFACE PRIOR TO THE PLACEMENT OF REINFORCING STEEL OR CONCRETE. RELATIVE COMPACTION REFERS TO THE IN-PLACE DRY DENSITY OF SOIL EXPRESSED AS A PERCENTAGE OF THE MAXIMUM DRY DENSITY OF THE SAME SOIL DETERMINED IN ACCORDANCE WITH ASTM D1557. OPTIMUM MOISTURE IS THE WATER CONTENT (PERCENTAGE BY DRY WEIGHT) CORRESPONDING TO THE MAXIMUM DRY DENSITY.

   B. SOFT AND/OR LOOSE MATERIALS ENCOUNTERED AT THE BOTTOM OF FOOTING EXCAVATIONS SHALL BE OVER-EXCAVATED TO EXPOSE THE UNDERLYING FIRM MATERIALS. THE OVER-EXCAVATION SHALL BE BACKFILLED WITH SELECT FILL MATERIALS COMPACTED TO A MINIMUM OF 90 PERCENT RELATIVE COMPACTION.

   C. A MINIMUM 6-INCH THICK CAPPING FILL LAYER SHALL BE PROVIDED BELOW THE SLAB CUSHION FILL. THE CAPPING LAYER SHALL CONSIST OF NON-EXPANSIVE SELECT GRANULAR MATERIAL AND SHALL BE WELL-GRADED FROM COARSE TO FINE WITH NO PARTICLES LARGER THAN 3 INCHES IN LARGEST DIMENSION AND SHALL CONTAIN BETWEEN 10 AND 30 PERCENT PARTICLES PASSING THE NO. 200 THE SELECT MATERIAL SHALL HAVE A LABORATORY CBR VALUE OF 20 OR MORE AND SHALL HAVE A MAXIMUM SWELL OF LESS THAN 1 PERCENT WHEN TESTED IN ACCORDANCE WITH ASTM D1883. THE SELECT MATERIAL SHALL ALSO BE FREE OF VEGETATION AND DELETERIOUS MATERIALS.

   D. THE ON-SITE SUBGRADE SOILS SHALL BE SCARIFIED TO A DEPTH OF ABOUT 8 INCHES, MOISTURE CONDITIONING TO AT LEAST 2 PERCENT ABOVE THE OPTIMUM MOISTURE, AND RECOMPACTING TO A MINIMUM OF 90 PERCENT RELATIVE COMPACTION. WHERE SHRINKAGE CRACKS ARE NOTED AFTER COMPACTION OF THE SUBGRADE THE SOILS SHALL BE THOROUGHLY MOISTENED TO CLOSE THE CRACKS OR THE SUBGRADES SHALL BE PREPARED AGAIN. SATURATION AND SUBSEQUENT YIELDING OF THE EXPOSED SUBGRADE DUE TO INCLEMENT WEATHER AND POOR DRAINAGE SHALL REQUIRE OVER-EXCAVATION OF THE SOFT AREAS AND REPLACEMENT WITH WELL-COMPACTED FILL.

   E. FOR INTERIOR BUILDING SLABS (NOT SUBJECTED TO VEHICULAR TRAFFIC OR MACHINERY VIBRATION), PLACE A MINIMUM 4-INCH THICK LAYER OF CUSHION FILL CONSISTING OF OPEN-GRADED GRAVEL (ASTM C33, NO. 67 GRADATION) BELOW THE SLABS. THE OPEN-GRADED GRAVEL CUSHION FILL WOULD SERVE AS A CAPILLARY MOISTURE BREAK AND WOULD PROVIDE UNIFORM SUPPORT OF THE SLABS. TO REDUCE THE POTENTIAL FOR EXCESSIVE FUTURE MOISTURE INFILTRATION THROUGH THE SLAB AND SUBSEQUENT DAMAGE TO FLOOR COVERINGS, AN IMPERVIOUS MOISTURE BARRIER SHALL BE PROVIDED ON TOP OF THE GRAVEL CUSHION FILL LAYER.

   F. WHERE THE SLABS WILL BE SUBJECTED TO VEHICULAR TRAFFIC OR MACHINERY VIBRATION PROVIDE A 6-INCH LAYER OF AGGREGATE SUBBASE BELOW THE SLABS IN LIEU OF THE 4-INCH THICK GRAVEL CUSHION LAYER. THE MOISTURE BARRIER MAY BE OMITTED FOR THESE SLABS. THE AGGREGATE SUBBASE SHALL CONSIST OF CRUSHED BASALTIC AGGREGATES COMPACTED TO A MINIMUM OF 95 PERCENT RELATIVE COMPACTION.

   G. EXTERIOR FLATWORK, SUCH AS SIDEWALKS, SHALL BE SUPPORTED ON A MINIMUM 6-INCH THICK CAPPING FILL LAYER CONSISTING OF NON-EXPANSIVE SELECT GRANULAR FILL MATERIALS. TO REDUCE THE POTENTIAL FOR SUBSTANTIAL SHRINKAGE CRACKS DEVELOPING IN THE SLABS, CRACK CONTROL JOINTS SHALL BE PROVIDED AT INTERVALS EQUAL TO THE WIDTH OF THE WALKWAYS WITH EXPANSION JOINTS PROVIDED AT RIGHT-ANGLE INTERSECTIONS.

   H. THE THICKENED EDGES OF SLABS ADJACENT TO UNPAVED AREAS SHALL BE EMBEDDED AT LEAST 12 INCHES BELOW THE LOWEST ADJACENT GRADE. IT SHALL BE EMPHASIZED THAT THE AREAS ADJACENT TO THE SLAB EDGES SHALL BE BACKFILLED TIGHTLY AGAINST THE EDGES OF THE SLABS WITH RELATIVELY IMPERVIOUS SOILS. THESE AREAS SHALL ALSO BE GRADED TO DIVERT WATER AWAY FROM THE SLABS AND TO REDUCE THE POTENTIAL FOR WATER PONDING AROUND THE SLABS. THE SLAB SUBGRADES SHALL BE KEPT MOIST PRIOR TO THE FINAL PLACEMENT OF CONCRETE. WHERE SHRINKAGE CRACKS ARE OBSERVED AFTER COMPACTION OF THE SUBGRADE, THOROUGHLY MOISTENING THE SOIL TO CLOSE THE CRACKS. SATURATION AND SUBSEQUENT YIELDING OF THE EXPOSED SUBGRADE DUE TO INCLEMENT WEATHER AND POOR DRAINAGE SHALL REQUIRE OVER EXCAVATION OF THE SOFT AREAS AND REPLACEMENT WITH WELL COMPACTED FILL AT NO ADDITIONAL COST TO THE OWNER. THE AREA ADJACENT TO THE SLABS SHALL BE BACKFILLED TIGHTLY AGAINST THE SLAB EDGES WITH RELATIVELY IMPERVIOUS SOILS (ON-SITE CLAYEY SOILS) AND GRADED TO DIVERT WATER AWAY FROM THE SLABS TO REDUCE THE POTENTIAL FOR APPRECIABLE WATER PONDING AROUND THE SLAB EDGES.

5. FOR EXCAVATION AND DEWATERING RECOMMENDATIONS, REFER TO PROJECT GEOTECHNICAL REPORT.

6. AT THE ON-SET OF EARTHWORK, THE AREA WITHIN THE CONTRACT GRADING LIMITS SHALL BE THOROUGHLY CLEARED AND GRUBBED. ALL VEGETATION, DEBRIS, DELETERIOUS MATERIAL AND OTHER UNSUITABLE MATERIALS SHALL BE REMOVED AND DISPOSED OF PROPERLY OFF-SITE OR STOCKPILED IN A DESIGNATED AREA TO REDUCE THE POTENTIAL FOR CONTAMINATING THE EXCAVATED MATERIALS.

7. SOFT AND YIELDING AREAS ENCOUNTERED DURING CLEARING AND GRUBBING SHALL BE OVER-EXCAVATED TO EXPOSE FIRM NATURAL MATERIAL, AND THE RESULTING EXCAVATION SHALL BE BACKFILLED WITH WELL-COMPACTED FILLS. THE EXCAVATED SOFT AND/OR ORGANIC SOILS SHALL BE DISPOSED OF PROPERLY OFF-SITE AND/OR USED IN LANDSCAPE AREAS, WHERE APPROPRIATE.

8. AREAS TO RECEIVE FILL AND FINISHED SUBGRADES IN CUT AREAS SHALL BE SCARIFIED TO A MINIMUM DEPTH OF 8 INCHES, MOISTURE-CONDITIONED TO AT LEAST 2 PERCENT ABOVE THE OPTIMUM MOISTURE, AND COMPACTED TO A MINIMUM OF 90 PERCENT RELATIVE COMPACTION. RELATIVE COMPACTION REFERS TO THE IN-PLACE DRY DENSITY OF SOIL EXPRESSED AS A PERCENTAGE OF THE MAXIMUM DRY DENSITY AS DETERMINED BY ASTM D1557. OPTIMUM MOISTURE IS THE WATER CONTENT (PERCENTAGE BY WEIGHT) CORRESPONDING TO THE MAXIMUM DRY DENSITY. COBBLES AND BOULDERS GREATER THAN 6 INCHES IN MAXIMUM DIMENSION EXPOSED DURING THE SCARIFICATION PROCESS SHALL BE REMOVED AND EITHER STOCKPILED IN A DESIGNATED AREA FOR CRUSHING TO ACCEPTABLE SIZE (6-INCH MINUS) FOR REUSE AS FILL OR DISPOSED OF PROPERLY OFF-SITE.

9. IMPORTED FILL MATERIALS SHALL BE TESTED BY GEOLABS PRIOR TO DELIVERY FOR CONFORMANCE WITH REQUIREMENTS AS NOTED BELOW AND IN PROJECT GEOTECHNICAL REPORT.

   IMPORTED FILL MATERIALS SHALL CONSIST OF NON-EXPANSIVE SELECT GRANULAR FILL MATERIAL SUCH AS CRUSHED CORAL OR BASALT GRAVEL SHALL BE WELL-GRADED FROM COARSE TO FINE WITH PARTICLES NO GREATER THAN 3 INCHES IN LARGEST DIMENSION. THE IMPORTED MATERIAL SHALL CONTAIN BETWEEN 10 TO 30 PERCENT PARTICLES PASSING THE NO. 200 SIEVE, A LABORATORY CBR VALUE OF AT LEAST 20, AND A MAXIMUM SWELL POTENTIAL OF 1 PERCENT OR LESS WHEN TESTED IN ACCORDANCE WITH ASTM D1883. NON-EXPANSIVE SELECT GRANULAR FILL SHALL BE MOISTURE CONDITIONED TO ABOVE THE OPTIMUM MOISTURE CONTENT, PLACED IN LEVEL LIFTS NOT EXCEEDING 8 INCHES IN LOOSE THICKNESS, AND COMPACTED TO A MINIMUM OF 90 PERCENT RELATIVE COMPACTION – 95 PERCENT RELATIVE COMPACTION FOR THE UPPER 3 FEET OF FILL AT AREAS BELOW VEHICULAR TRAFFIC.

   COMPACTION SHALL BE ACCOMPLISHED BY SHEEPSFOOT ROLLERS, VIBRATORY ROLLERS, OR OTHER TYPES OF ACCEPTABLE COMPACTION EQUIPMENT.

   WHERE GROUNDWATER IS ENCOUNTERED (WITHIN THE EXCAVATIONS), BACKFILL MATERIALS SHALL CONSIST OF FREE-DRAINING GRANULAR MATERIALS, SUCH AS NO. 3B FINE GRAVEL (ASTM C33, NO. 67 GRADATION), WRAPPED ON ALL SIDES WITH NON-WOVEN FILTER FABRIC. THE FREE-DRAINING GRANULAR MATERIALS SHALL BE USED UP TO A LEVEL OF ABOUT 12 INCHES ABOVE THE GROUNDWATER LEVEL TO FACILITATE COMPACTION OF THE FILL MATERIALS. THE FREE-DRAINING GRANULAR FILL MATERIALS SHALL BE USED IN A CONFINED CONDITION. ALTERNATIVELY, LEAN CONCRETE MAY BE USED AS BACKFILL MATERIAL.

   IN GENERAL, CUT AND FILL SLOPES PLANNED AT THE SITE SHALL BE DESIGNED WITH A SLOPE INCLINATION OF 2H:1V OR FLATTER. THE FILLING OPERATION SHALL START AT THE LOWEST POINT AND CONTINUE UP IN LEVEL HORIZONTAL COMPACTED LAYERS IN ACCORDANCE WITH THE ABOVE FILL PLACEMENT RECOMMENDATIONS. FILL SLOPES SHALL BE CONSTRUCTED BY OVERFILLING AND CUTTING BACK TO THE DESIGN SLOPE RATIO TO OBTAIN A WELL-COMPACTED SLOPE FACE. WATER SHALL BE DIVERTED AWAY FROM THE TOPS OF SLOPES, AND SLOPE PLANTING SHALL BE PROVIDED AS SOON AS POSSIBLE TO REDUCE THE POTENTIAL FOR EROSION OF THE FINISHED SLOPES.

CONCRETE

1. SCHEDULE OF STRUCTURAL CONCRETE 28-DAY STRENGTH AND TYPES:

   ALL CONCRETE STRUCTURES = 5,500 PSI (W/C=0.40)

2. CLEAR COVERAGE OF CONCRETE OVER OUTER REINFORCING BARS SHALL BE AS FOLLOWS, UNLESS OTHERWISE NOTED:

   CAST-IN-PLACE CONCRETE:

   A. CONCRETE POURED DIRECTLY AGAINST EARTH = 3" CLEAR
   B. FORMED AND EXPOSED TO EARTH OR WEATHER = 2" CLEAR
   C. WALLS, SLABS, BEAMS IN CONTACT WITH LIQUIDS = 3" CLEAR
   D. SLAB ON GRADE = 2" CLEAR AT TOP, UON

   PRECAST CONCRETE:
   MANUFACTURED UNDER PLANT PER ACI 318-11 SECTION 7.7.3 CONTROL CONDITIONS.

   A. CONCRETE EXPOSED TO EARTH OR WEATHER = 2"

3. FOR ALL SEWAGE STRUCTURES AN APPROVED ADMIXTURE WHOSE ACTIVE INGREDIENT IS A METALLIC SALT OF HYDROXYLATED CARBONIC ACID AND CONFORMING TO ASTM C 494, TYPE D, SHALL BE ADDED IN STRICT ACCORDANCE WITH THE MANUFACTURER'S RECOMMENDATION.

4. ALL REINFORCING BARS, ANCHOR BOLTS AND OTHER CONCRETE INSERTS SHALL BE WELL SECURED IN POSITION PRIOR TO PLACING CONCRETE.

5. PROJECTING CORNERS OF BEAMS, WALLS, ETC. SHALL BE FORMED WITH 3/4" CHAMFER, UNLESS OTHERWISE NOTED ON DRAWINGS.

6. PROVIDE SLEEVES FOR PLUMBING AND ELECTRICAL OPENINGS IN CONCRETE BEFORE PLACING. DO NOT CUT ANY REINFORCING WHICH MAY CONFLICT. CORING IN CONCRETE IS NOT PERMITTED UNLESS SPECIFICALLY APPROVED BY THE OWNER.

7. CONTRACTOR SHALL PROVIDE DRAWINGS AND CALCULATIONS STAMPED BY A HAWAII LICENSED STRUCTURAL ENGINEER FOR ALL PRECAST STRUCTURES AS NOTED IN DETAILS.

8. CONTRACTOR SHALL SUBMIT TO THE ENGINEER FOR REVIEW SHOP DRAWINGS FOR ALL PRECAST STRUCTURES PRIOR TO FABRICATION.

9. CONCRETE MIX DESIGN SHALL BE SUBMITTED TO THE STRUCTURAL ENGINEER FOR REVIEW PRIOR TO CONCRETE POUR.

10. NOTIFY CONTRACTING OFFICER AND STRUCTURAL ENGINEER 72 HOURS PRIOR TO ANY CONCRETE POUR.

CONCRETE MASONRY (CMU)

1. CONCRETE BLOCK SHALL BE HOLLOW LOAD-BEARING CONCRETE MASONRY UNITS CONFORMING TO ASTM C90, NORMAL WEIGHT, ASSEMBLY F'm = 1,900 PSI.

2. ALL WALLS SHALL BE CONSTRUCTED IN RUNNING BOND WITH TYPE M MORTAR UNLESS INDICATED OTHERWISE. MORTAR SHALL ATTAIN COMPRESSIVE STRENGTH OF 3,000 PSI AT 28 DAYS.

3. GROUT SHALL FLOW INTO ALL JOINTS OF THE MASONRY WITHOUT SEGREGATION. COMPRESSIVE STRENGTH AT 28 DAYS = 3,000 PSI.

4. REINFORCING BARS: SEE NOTES UNDER "REINFORCING STEEL" FOR REQUIREMENTS.

5. PROVIDE A MINIMUM OF 1/2" GROUT BETWEEN MAIN REINFORCING AND MASONRY UNITS.

6. GROUT SOLID ALL CELLS.

7. CELLS SHALL BE IN VERTICAL ALIGNMENT. DOWELS IN FOOTING SHALL BE SET TO ALIGN WITH CORES CONTAINING REINFORCING STEEL. SECURE VERTICAL BARS WITH POSITIONERS AT 8'-0" MAX.

8. IF BLOCK IS LAYED TO A HEIGHT EXCEEDING 5'-4" FOR EACH GROUT LIFT, PROVIDE CLEANOUT AT BASE FOR CELL CONTAINING REINFORCING.

9. CONCRETE SURFACES SHALL BE CLEANED OF ALL LAITANCE PRIOR TO SETTING BLOCKS.

10. UNLESS NOTED OTHERWISE, ALL WALLS SHALL BE CONSTRUCTED IN CONVENTIONAL, RUNNING BOND. REFER TO ARCHITECTURAL DRAWINGS FOR SURFACE TEXTURE AND HEIGHT OF UNITS, LAYING PATTERN AND JOINT TYPE.

AustinTsutsumi
& ASSOCIATES, INC.
CIVIL ENGINEERS I SURVEYORS
HONOLULU I WAILUKU I HILO, HAWAII

501 SUMNER STREET, SUITE 521
HONOLULU, HAWAII 96817

PHONE: 808-533-3646
FAX: 808-526-1267

STATE OF HAWAII
DEPARTMENT OF
HAWAIIAN HOME LANDS

PULEHUNUI
REGIONAL
INFRASTRUCTURE

AUSTIN, TSUTSUMI & ASSOC., INC.
ENGINEERS, SURVEYORS • HONOLULU, HAWAII

GEORGE O. GUTIERREZ JR.
LICENSED PROFESSIONAL ENGINEER
NO. 12107-S
HAWAII, U.S.A.

This work was prepared by me or under my supervision and construction of this project will be under my observation. (Observation of construction as defined in Chapter 16-115 Subchapter 1 Definitions of the Hawaii Administrative Rules "Professional Engineers, Architects, Surveyors, and Landscape Architects.")

SIGNATURE — APRIL 30, 2020 EXP. DATE OF THE LICENSE

0 1 2
LINE IS 2 INCHES AT FULL SIZE
(If NOT 2-inches : Scale Accordingly)

REVISION	DATE	BRIEF	BY

Project No:	16-576
Scale:	AS NOTED
Date:	1/22/20
Designed By:	CK
Drawn By:	LL
Checked By:	GG

STRUCTURAL
GENERAL NOTES

DWG. NO.
S-1

FILE	POCKET	FOLDER	NO.

JOB NO. O-11-056.004
FN: F:\19.OB.DWG\19060 DHHL PULEHUNUI\DWGS_19060\STRUCT_19060\DWGS_19060\DRAWINGS.DWG

REINFORCING STEEL

1. TYPICAL CONCRETE WORK AND CMU: REINFORCING BARS SHALL BE ASTM A615, GRADE 60.
2. DOWELS SHALL BE THE SAME GRADE, SIZE, SPACING AND IN THE SAME PLANE AS THE BARS TO WHICH THEY ARE SPLICED, UNLESS OTHERWISE INDICATED.
3. REINFORCING BAR BENDS, HOOKS, OFFSETS, DETAILING, FABRICATION AND ERECTION SHALL BE IN ACCORDANCE WITH THE LATEST ACI RECOMMENDATIONS.
4. CONTRACTOR SHALL SUBMIT REINFORCING BAR LAYOUTS AND DETAILS FOR STRUCTURAL ENGINEER'S REVIEW PRIOR TO FABRICATION. FABRICATE FROM REVIEWED DRAWINGS ONLY. PHOTO COPIES AND DUPLICATES OF CONSTRUCTION DOCUMENTS SUBMITTED AS SHOP DRAWINGS WILL BE REJECTED.
5. ANCHOR BOLTS, DOWELS AND OTHER EMBEDDED ITEMS ARE TO BE SECURELY TIED IN PLACE BEFORE CONCRETE IS POURED.
6. ALL REINFORCING BAR BENDS SHALL BE MADE COLD.
7. SPECIAL SPACER CHAIRS: PLASTIC SPACER "CHAIRS" SHALL BE USED TO MAINTAIN REQUIRED MINIMUM CONCRETE CLEAR COVER FOR ALL WALL REINFORCING AT FACES EXPOSED TO WEATHER OR LIQUIDS.
8. WELDING OF REINFORCING MAY BE MADE IN ACCORDANCE WITH THE WELDED SPLICE DETAIL SHOWN BELOW. WELDING OF REINFORCING STEEL SHALL CONFORM TO AWS D1.4–2000 "AWS STRUCTURAL WELDING CODE – REINFORCING STEEL" OF THE AMERICAN WELDING SOCIETY. BARS TO BE WELDED SHALL BE ASTM A706.

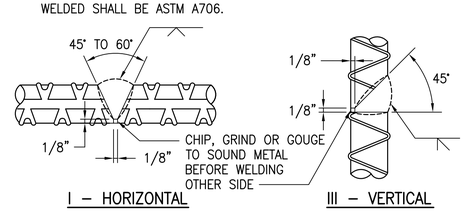

I – HORIZONTAL III – VERTICAL

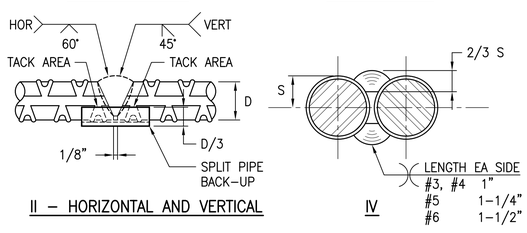

II – HORIZONTAL AND VERTICAL IV

9. EMBEDMENT AND LAP SPLICES LENGTHS:
   A. LAP SPLICE LENGTHS SHALL BE 64 BAR DIAMETERS FOR #3 TO #6 AND 80 BAR DIAMETERS FOR #7 TO #11, UNLESS OTHERWISE SHOWN.
   B. SPLICE LOCATIONS UNLESS SHOWN OTHERWISE:
      1) WALLS: HORIZONTAL REINFORCING ALTERNATELY STAGGERED A MINIMUM 4'–0" APART.
      2) BEAMS AND SLABS:
      a. TOP BARS AT MIDSPAN
      b. BOTTOM BARS AT SUPPORTS
   C. EMBEDMENT DEPTHS SHALL BE 50 BAR DIAMETERS FOR #3 TO #6 AND 62 BAR DIAMETERS FOR #7 TO #11, UNLESS OTHERWISE SHOWN. IF THERE IS INSUFFICIENT DEPTH TO OBTAIN PROPER EMBEDMENT, EXTEND DOWEL TO FAR FACE OF MEMBER AND HOOK, UNLESS OTHERWISE SHOWN.

FRP GRATING

1. FRP GRATING SHALL BE STRONGWELL DURAGRID T–3300 OR PRE–REVIEWED EQUAL. FOR DESIGN LIVE LOAD RATING SEE DESIGN CRITERIA ON SHEET S–1.
2. CONTRACTOR SHALL SUBMIT PRODUCT DATA AND SHOP DRAWINGS FOR STRUCTURAL ENGINEER'S REVIEW PRIOR TO FABRICATION.
3. SEE SPECIFICATIONS FOR ADDITIONAL INFORMATION.

EPOXY MATERIAL

1. REFER TO DRAWINGS FOR AREAS WHICH REQUIRE EPOXY EMBEDDED BOLTS AND DOWELS.
2. EPOXY ADHESIVE PRODUCTS FOR NON–OVERHEAD APPLICATIONS INTO SOLID MATERIAL SHALL BE AS NOTED IN THE FOLLOWING OR PRE–REVIEWED EQUAL:
   A. HILTI HIT HY–200R ADHESIVE ANCHORS BY THE HILTI CORPORATION.
   B. SIKADUR HI–MOD BY SIKA CORPORATION.
   C. SIMPSON EPOXY SET XP BY SIMPSON CORPORATION.
3. EPOXY ADHESIVE PRODUCTS FOR OVERHEAD APPLICATIONS INTO SOLID MATERIAL SHALL BE SIMPSON SET XP WITH PISTON PLUG DELIVERY SYSTEM OR PRE–REVIEWED EQUAL.
4. CONTRACTOR TO LOCATE EXISTING STEEL REINFORCING BY NON–DESTRUCTIVE TESTING PRIOR TO DRILLING ALL HOLES FOR EPOXY EMBED CONNECTIONS.

STRUCTURAL STEEL

1. STRUCTURAL STEEL SHALL BE DETAILED, FABRICATED AND ERECTED IN ACCORDANCE WITH THE "AISC SPECIFICATION FOR THE DESIGN, FABRICATION AND ERECTION OF STRUCTURAL STEEL FOR BUILDINGS."
2. STRUCTURAL STEEL SECTIONS SHALL CONFORM TO THE FOLLOWING ASTM DESIGNATIONS:

WIDE FLANGES	= A992, GRADE 50
PLATES, CHANNELS, ANGLES, MISC. STEEL	= A36
HSSx TUBES	= A500, GRADE B

3. ALL BOLT ASSEMBLIES SHALL BE HIGH STRENGTH TENSION CONTROL "TWIST OFF" BOLTS PER ASTM F1852 (A325TC) TYPE 1, UNLESS OTHERWISE NOTED. ALL BOLTS SHALL BE TORQUED PER ASTM F1852 UNTIL SPLINE END HAS PROPERLY SHEARED. ALL BOLT ASSEMBLIES SHALL BE PROVIDED WITH AN ASTM A563 DH NUT AND ASTM F436 TYPE 1 PLAIN WASHERS ON EACH FACE UNLESS OTHERWISE NOTED. EACH COMPONENT OF EXTERIOR EXPOSED BOLT ASSEMBLIES SHALL BE MECHANICALLY GALVANIZED PER ASTM B695 CLASS 55 MINIMUM TYPE I.
4. CAST–IN–PLACE AND EPOXY EMBEDDED ANCHOR RODS SHALL CONFORM TO ASTM F1554 REQUIREMENTS, GRADE 55.
5. THE STRUCTURAL STEEL FABRICATOR SHALL FURNISH SHOP DRAWINGS OF ALL STRUCTURAL STEEL FOR CONTRACTING OFFICER'S REVIEW BEFORE FABRICATION.
6. BOLT HOLES IN STEEL SHALL BE 1/16" LARGER DIAMETER THAN NOMINAL SIZE OF BOLT USED, UNLESS OTHERWISE NOTED.
7. ALL WELDS SHALL BE IN CONFORMITY WITH THE STRUCTURAL WELDING CODE AWS D1.1–04 OF THE AMERICAN WELDING SOCIETY; USE E70XX ELECTRODES.
8. ALL EXPOSED STRUCTURAL STEEL AND MISCELLANEOUS METAL OR AS NOTED ON PLAN SHALL BE HOT–DIP GALVANIZED AFTER FABRICATION. ALL WELDS AFTER HOT–DIP GALVANIZING SHALL BE GROUND SMOOTH AND COATED WITH TWO COATS OF ZRC COLD GALVANIZING.
9. ALL HOT–DIP GALVANIZED STRUCTURAL MEMBERS SHALL BE COATED WITH EPOXY IF CONNECTING TO OR IN CONTACT WITH ALUMINUM, STAINLESS STEEL, OR OTHER DISSIMILAR METALS.
10. ALL HOT–DIP GALVANIZED STEEL INCLUDING FASTENERS AND ATTACHMENTS SHALL BE COATED WITH A HIGH PERFORMANCE COATING SYSTEM AS NOTED BELOW. CONTRACTOR SHALL REFER TO AND FOLLOW COATING MANUFACTURER'S RECOMMENDATIONS AND INSTRUCTIONS INCLUDING BUT NOT LIMITED TO SURFACE PREPARATION AND APPLICATION PROCEDURES.

SURFACE PREP	– REFER TO COATING MANUFACTURER'S INSTRUCTIONS FOR COATING APPLICATION ON HOT–DIP GALVANIZED STEEL
PRIMER/BASE COAT	– TWO COMPONENT HIGH SOLIDS EPOXY COATING, PPG AMERLOCK 400 OR PRE–REVIEWED EQUAL. 5 – 6 MILS DFT
TOP COAT	– TWO COMPONENT ENGINEERED POLYSILOXANE COATING, PPG PSX 700 OR PRE–REVIEWED EQUAL 3 – 7 MILS DFT

COATING SYSTEM SHALL BE PROVIDED BY THE SAME MANUFACTURER AND SHALL BE SUBMITTED TO THE OWNER FOR REVIEW PRIOR TO START OF WORK.

PAINT COLOR TO BE SELECTED BY THE OWNER.

11. ALL GROUT (OR DRYPACK) BELOW BASE PLATES, BEAMS BEARING ON CONCRETE WALLS, ETC., SHALL BE NON–SHRINK, NON–STAINING, WITH f'c=5,000 PSI.

STRUCTURAL STAINLESS STEEL

1. ALL STEEL FRAMING AND CONNECTORS SHALL BE TYPE 316 STAINLESS STEEL Fy = 30 KSI MINIMUM INCLUDING STAINLESS STEEL BOLTS CONFORMING TO ASTM F593 AND STAINLESS STEEL ANCHOR RODS CONFORMING TO ASTM A193 OR ASTM A320. ALL WELDS SHALL BE IN CONFORMITY WITH STRUCTURAL WELDING CODE, AWS D1.6.
2. STRUCTURAL STEEL SHALL BE DETAILED, FABRICATED AND ERECTED IN ACCORDANCE WITH THE "AISC SPECIFICATION FOR THE DESIGN, FABRICATION AND ERECTION OF STRUCTURAL STEEL FOR BUILDINGS."
3. THE STRUCTURAL STEEL FABRICATOR SHALL FURNISH SHOP DRAWINGS OF ALL STRUCTURAL STEEL RESPECTIVELY, FOR CONTRACTING OFFICER'S REVIEW BEFORE FABRICATION.
4. BOLT HOLES IN STEEL SHALL BE 1/16" LARGER DIAMETER THAN NOMINAL SIZE OF BOLT USED, UNLESS OTHERWISE NOTED.
5. ALL WELDS SHALL BE IN CONFORMITY WITH THE STRUCTURAL WELDING CODE AWS D1.1 OR D1.6 OF THE AMERICAN WELDING SOCIETY; SEE SPECIFICATIONS.
6. STRUCTURAL STEEL FRAMING SHALL BE EQUALLY SPACED BETWEEN SUPPORT LINES, UNLESS OTHERWISE NOTED.
7. ALL GROUT (OR DRYPACK) BELOW BASE PLATES, BEAMS BEARING ON CONCRETE WALLS, ETC., SHALL BE NON–SHRINK, NON–STAINING, WITH f'c = 5,000 PSI. SEE SPECIFICATIONS FOR ADDITIONAL INFORMATION.

PRE–ENGINEERED METAL BUILDING/STRUCTURES

1. PRE–ENGINEERED METAL BUILDING (PEMB) AND STRUCTURES DESIGN SHALL BE PROVIDED BY THE CONTRACTOR. DRAWINGS AND CALCULATIONS SHALL BE STAMPED AND SIGNED BY A STRUCTURAL ENGINEER LICENSED IN THE STATE OF HAWAII. REFER TO DESIGN CRITERIA IN GENERAL NOTES ON SHEET S–1 AND SPECIFICATIONS FOR ADDITIONAL REQUIREMENTS.
2. PRE–ENGINEERED RAILING SYSTEMS, ELEVATED PLATFORMS/STAIRS/ CATWALKS SHALL CONFORM TO ALL APPLICABLE OSHA REQUIREMENTS AND STANDARDS.
3. CONSTRUCTION DOCUMENTS PROVIDED BY NAGAMINE OKAWA ENGINEERS INC. ADDRESS THE DESIGN OF FOUNDATION SYSTEM AND CMU WALLS. THE REMAINDER OF BUILDING DESIGN SHALL BE PROVIDED BY PEMB MANUFACTURER.
4. FOUNDATION SYSTEM SHOWN IS BASED ON LAYOUT OF COLUMNS AND LATERAL–FORCE–RESISTING SYSTEM INDICATED ON DRAWINGS. REVISION OF COLUMN LOCATIONS AND LATERAL–FORCE–RESISTING SYSTEM LOCATION WILL REQUIRE REVISION OF FOUNDATION SYSTEM AND MAY AFFECT FOOTING SIZES.
5. CONTRACTOR SHALL SUBMIT SHOP DRAWINGS AND PEMB DESIGN CALCULATIONS TO CONTRACTING OFFICER FOR REVIEW PRIOR TO FABRICATION AND CONSTRUCTION OF FOOTINGS.
6. RIGID FRAME AND ASSOCIATED STRUCTURAL ROOF MEMBERS SHALL BE DESIGNED FOR DEAD LOAD (DL), LIVE LOAD (LL), WIND (WL), AND EARTHQUAKE LOAD (EQ), IN ACCORDANCE WITH GOVERNING BUILDING CODE. LATERAL SEISMIC LOADS GENERATED BY CMU WALLS SHALL BE SUPPORTED BY ROOF DIAPHRAGMS AND TRANSFERRED TO LATERAL–FORCE–RESISTING SYSTEM OF THE BUILDING.
7. ALL FRAMING SHALL BE PROVIDED BY PEMB MANUFACTURER AND SHALL SUPPORT ACCESS LADDER, ALL ROOF PANELS, BUILDING FINISHES, CEILINGS, PIPES, CONDUITS, DUCTS, EQUIPMENT, SPRINKLERS, NON–STRUCTURAL WALLS AND OTHER BUILDING ELEMENTS SHOWN ON ARCHITECTURAL, MECHANICAL, ELECTRICAL, PLUMBING AND FIRE PROTECTION DRAWINGS. IN ADDITION TO LOADS FROM THESE ELEMENTS, 3 PSF COLLATERAL LOAD SHALL BE ADDED. THIS INCLUDES BUT IS NOT LIMITED TO MECHANICAL SUPPORT FRAMING AND TOP OF WALL BRACING. PURLINS AND GIRTS SHALL HAVE A MINIMUM THICKNESS OF 18 GAGE.
8. ALL FRAMING INCIDENTAL TO PEMB FRAMING INCLUDING BUT NOT LIMITED TO Z–GIRT BASE ANGLES, SHALL BE PROVIDED BY THE PEMB MANUFACTURER. ANCHORAGE DESIGN OF INCIDENTAL FRAMING SHALL BE PROVIDED BY PEMB MANUFACTURER. PEMB FRAMING CONNECTION TO CONCRETE OR CMU SHALL BE WITH EPOXY EMBEDDED ANCHOR RODS OR ICC APPROVED EXPANSION–TYPE ANCHORS. POWDER ACTUATED FASTENERS ARE NOT ALLOWED.
9. ALL PEMB STRUCTURAL STEEL, INCIDENTAL FRAMING, AND FASTENERS SHALL BE HOT–DIP GALVANIZED.
10. METAL ROOFING SHALL NOT BE USED TO SUPPORT SUSPENDED CEILINGS, UTILITY LINES, DUCTS, ROOF PANELS, ETC. METAL ROOFING SHALL HAVE A MINIMUM THICKNESS OF 22 GAGE.

SPECIAL NOTE

CONTRACTOR SHALL INCLUDE A MATERIAL ALLOWANCE FOR ADDITIONAL STRUCTURAL REPAIRS SUCH AS CRACK REPAIRS IN CONCRETE. STRUCTURAL CRACKS THAT REQUIRE REPAIR SHALL BE VERIFIED BY THE STRUCTURAL ENGINEER PRIOR TO PERFORMING CONCRETE CRACK REPAIR WORK. STRUCTURAL CRACKS IN CONCRETE THAT ARE PRESENT 45 DAYS AFTER CONCRETE HAS BEEN PLACED SHALL BE REPAIRED BY EPOXY PRESSURE INJECTION. REFER TO PRESSURE INJECTION CRACK REPAIR METHOD DETAILS IN STRUCTURAL DRAWINGS. CONTRACTOR SHALL INCLUDE AN ALLOWANCE TO REPAIR 1,000 LINEAR FEET OF CRACKS BY EPOXY PRESSURE INJECTION. STRUCTURAL CRACKS THAT REQUIRE REPAIR ABOVE STATED LENGTHS SHALL BE PAID ON A COST PER FOOT BASIS. THE QUANTITIES NOTED ARE APPROXIMATE. THE ACTUAL QUANTITIES OF WORK MAY NOT CORRESPOND WITH THE QUANTITIES SHOWN IN THE CONTRACT.

ABBREVIATIONS

AB	ANCHOR BOLT
AC	ASPHALT CEMENT
AL, ALUM	ALUMINUM
ALT	ALTERNATE
ARCH	ARCHITECT(URAL)
BOT	BOTTOM
BM	BEAM
CIP	CAST–IN–PLACE
CJ	CONSTRUCTION/CONTROL JOINT
CJP	COMPLETE JOINT PENETRATION
CL	CENTERLINE
CLR	CLEAR(ANCE)
COL	COLUMN
CONC	CONCRETE
CONN	CONNECTION
CONT	CONTINUOUS
(D)	DEEP
DEG	DEGREE
DIA	DIAMETER
DIAG	DIAGONAL
DIM(S)	DIMENSION(S)
DN	DOWN
DO	DITTO
DWG(S)	DRAWING(S)
EA	EACH
EF	EACH FACE
ELEC	ELECTRICAL
EL, ELEV	ELEVATION
EJ	EXPANSION JOINT
EQ	EQUAL
ES	EACH SIDE
EW	EACH WAY
EXP	EXPANSION
FF	FINISH FLOOR
FG	FINISH GRADE
FIN	FINISH
FLR	FLOOR
FRP	FIBERGLASS REINFORCED PLASTIC
FTG	FOOTING
(H)	HIGH
HDG	HOT–DIP GALVANIZED
HORIZ	HORIZONTAL
HT	HEIGHT
JT	JOINT
(L)	LONG, LENGTH
LONGIT	LONGITUDINAL
MANUF	MANUFACTURER
MAX	MAXIMUM
MECH	MECHANICAL
MIN	MINIMUM
NS	NON–SHRINK
OC	ON CENTER
OPNG	OPENING
OPP	OPPOSITE
PEMB	PRE–ENGINEERED METAL BUILDING
PL	PLATE
PMJF	PRE–MOLDED JOINT FILLER
REINF	REINFORCED, REINFORCING
REQD	REQUIRED
RF	RIGID FRAME
S	STEP
SHT	SHEET
SIM	SIMILAR
SL	SLOPE
SOG	SLAB–ON–GRADE
SPC	SPACING
SQ	SQUARE
STD	STANDARD
SS	STAINLESS STEEL
STIFF	STIFFENER
T&B	TOP AND BOTTOM
TB	TIE BEAM
THK	THICK
THKD	THICKENED
THRU	THROUGH
TOF	TOP OF FOOTING
TOS	TOP OF SLAB
TRANS	TRANSVERSE
TYP	TYPICAL
UON	UNLESS OTHERWISE NOTED
VERT	VERTICAL
VIF	VERIFY IN FIELD
(W)	WIDE, WIDTH
W/	WITH
WF	WALL FOOTING
WP	WATERPROOFING

LEGEND

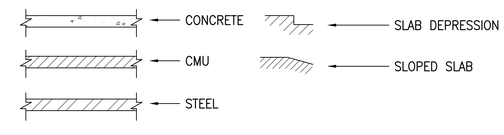

AustinTsutsumi & ASSOCIATES, INC.
CIVIL ENGINEERS I SURVEYORS
HONOLULU I WAILUKU I HILO, HAWAII
501 SUMNER STREET, SUITE 521
HONOLULU, HAWAII 96817
PHONE: 808-533-3646
FAX: 808-526-1267

STATE OF HAWAII
DEPARTMENT OF HAWAIIAN HOME LANDS

PULEHUNUI REGIONAL INFRASTRUCTURE

AUSTIN, TSUTSUMI & ASSOC., INC.
ENGINEERS, SURVEYORS • HONOLULU, HAWAII

GEORGE O. GUTIERREZ JR. LICENSED PROFESSIONAL ENGINEER NO. 12107–S HAWAII, U.S.A.

This work was prepared by me or under my supervision and construction of this project will be under my observation. (Observation of construction as defined in Chapter 16-115 Subchapter 1 Definitions of the Hawaii Administrative Rules "Professional Engineers, Architects, Surveyors, and Landscape Architects.")

SIGNATURE APRIL 30, 2020
EXP. DATE OF THE LICENSE

0 1 2
LINE IS 2 INCHES AT FULL SIZE
(If NOT 2–inches : Scale Accordingly)

REVISION	DATE	BRIEF	BY

Project No:	16-576
Scale:	AS NOTED
Date:	1/22/20
Designed By:	CK
Drawn By:	LL
Checked By:	GG

STRUCTURAL GENERAL NOTES

DWG. NO.
S-2

FILE	POCKET	FOLDER	NO.

JOB NO. 0–11–056.004
FN: F:\19JOB.DWG\19060 DHHL PULEHUNUI\DWGS_19060\STRUCT_19060\DWGS_19060\DRAWINGS.DWG

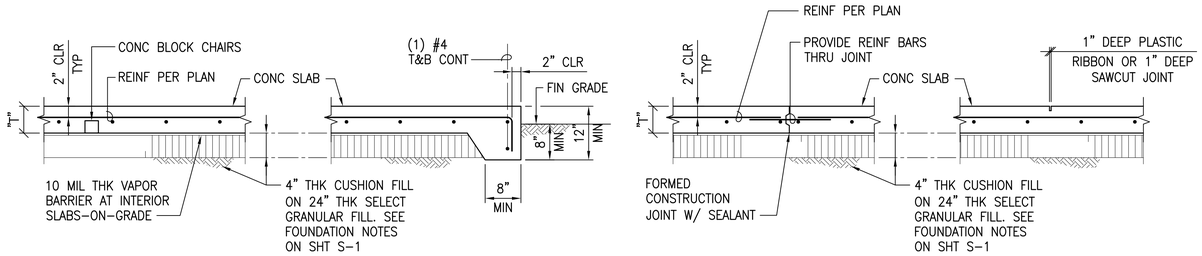

1 TYPICAL SLAB ON GRADE
NOT TO SCALE

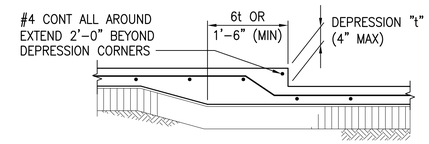

2 DEPRESSED SLAB
NOT TO SCALE

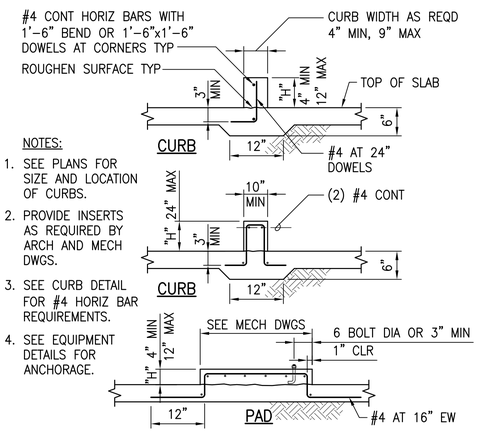

NOTES:

1. SEE PLANS FOR SIZE AND LOCATION OF CURBS.
2. PROVIDE INSERTS AS REQUIRED BY ARCH AND MECH DWGS.
3. SEE CURB DETAIL FOR #4 HORIZ BAR REQUIREMENTS.
4. SEE EQUIPMENT DETAILS FOR ANCHORAGE.

3 CONCRETE CURBS AND PADS
NOT TO SCALE

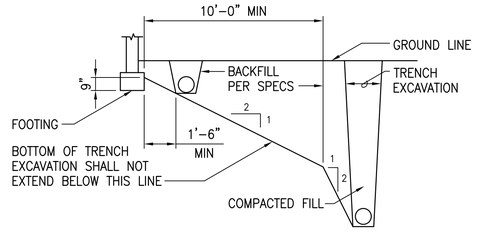

NOTE:

THE CONTRACTOR SHALL PROVIDE SHORING, SHEATHING OR OTHERWISE MAINTAINING THE SIDE OF THE EXCAVATION FROM CAVE-INS UNTIL ALL BACKFILL IS COMPLETED PER SPECIFICATIONS.

4 EXCAVATIONS PARALLEL TO FILL
NOT TO SCALE

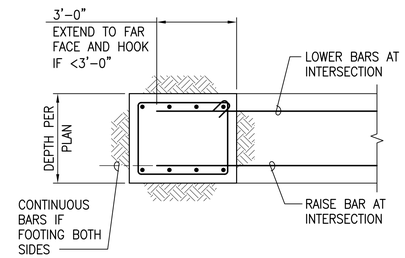

NOTE:

SEE 6/S-3 FOR FOOTING CONSTRUCTION JOINT DETAL.

5 INTERSECTING WALL FOOTING
NOT TO SCALE

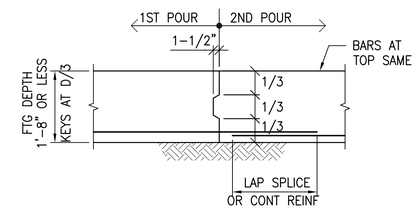

6 WALL FOOTING CONSTRUCTION JOINT
NOT TO SCALE

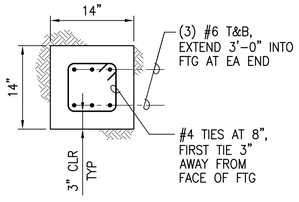

7 TIE BEAM CROSS SECTION
SCALE: 1" = 1'-0"

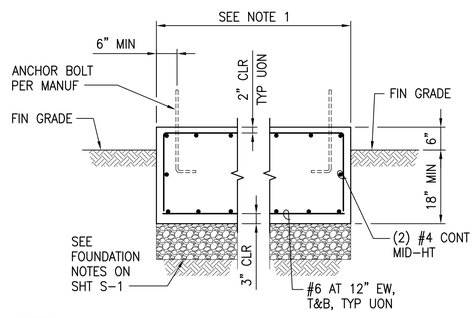

NOTE:

1. CONTRACTOR TO COORDINATE SIZE OF CONCRETE BASE AND GENERATOR ANCHORAGE REQUIREMENTS WITH GENERATOR MANUFACTURER. CONCRETE PAD SHALL EXTEND 12" OUT FROM EDGE OF GENERATOR EQUIPMENT ON ALL SIDES.

8 CONCRETE PAD FOR GENERATOR
NOT TO SCALE

GRAPHIC SCALE

0 3" 6" 1' 2' 3'

1"=1'-0"

AustinTsutsumi & ASSOCIATES, INC.
CIVIL ENGINEERS I SURVEYORS
HONOLULU I WAILUKU I HILO, HAWAII

501 SUMNER STREET, SUITE 521
HONOLULU, HAWAII 96817

PHONE: 808-533-3646
FAX: 808-526-1267

STATE OF HAWAII
DEPARTMENT OF
HAWAIIAN HOME LANDS

PULEHUNUI
REGIONAL
INFRASTRUCTURE

AUSTIN, TSUTSUMI & ASSOC., INC.
ENGINEERS, SUVEYORS • HONOLULU, HAWAII

GEORGE O. GUTIERREZ JR.
LICENSED PROFESSIONAL ENGINEER
NO. 12107-S
HAWAII, U.S.A.

This work was prepared by me or under my supervision and construction of this project will be under my observation. (Observation of construction as defined in Chapter 16-115 Subchapter 1 Definitions of the Hawaii Administrative Rules "Professional Engineers, Architects, Surveyors, and Landscape Architects.")

SIGNATURE — APRIL 30, 2020 EXP. DATE OF THE LICENSE

0 1 2
LINE IS 2 INCHES AT FULL SIZE
(If NOT 2-inches : Scale Accordingly)

REVISION	DATE	BRIEF	BY

Project No:	16-576
Scale:	AS NOTED
Date:	1/22/20
Designed By:	CK
Drawn By:	LL
Checked By:	GG

TYPICAL DETAILS – CONCRETE

DWG. NO.
S-3

SHEET 133 OF 201

FILE	POCKET	FOLDER	NO.

JOB NO. 0-11-056.004
FN: F:\19JOB.DWG\19060 DHHL PULEHUNUI\DWGS_19060\STRUCT_19060\DWGS_19060\DRAWINGS.DWG

FOOTING SPLICE LENGTHS (INCHES)
GRADE 60

f'c	MIN C TO C BAR SPACING	3000 PSI		4000 PSI		5000 PSI		6000 PSI	
BAR SIZE		OTHER BAR	TOP BAR	OTHER BAR	TOP BAR	OTHER BAR	TOP BAR	OTHER BAR	TOP BAR
#3	1.4"	13	17	12	17	12	17	12	16
#4	2.0"	20	26	17	22	15	20	14	18
#5	2.5"	25	33	22	28	20	25	18	23
#6	3.0"	31	40	27	34	24	31	22	28
#7	3.5"	45	58	39	51	35	45	32	41

NOTES:

1. TOP BARS ARE HORIZONTAL REINFORCEMENT SO PLACED THAT MORE THAN 12" OF FRESH CONCRETE IS CAST BELOW THE SPLICE.
2. CENTER TO CENTER BAR SPACING SHALL BE $\geq$ 4db. IF SPACING IS $<$ 4db, USE CONGESTED BEAM SPLICES.

SLAB & WALL SPLICE LENGTHS (INCHES)
GRADE 60

f'c	3000 PSI		4000 PSI		5000 PSI		6000 PSI	
BAR SIZE	OTHER BAR	TOP BAR	OTHER BAR	TOP BAR	OTHER BAR	TOP BAR	OTHER BAR	TOP BAR
#3	13	17	12	16	12	16	12	16
#4	21	28	18	24	17	22	15	20
#5	31	41	27	35	24	32	22	29
#6	43	56	37	48	33	43	30	39
#7	69	90	60	78	53	69	49	63

NOTES:

1. TOP BARS ARE HORIZONTAL REINFORCEMENT SO PLACED THAT MORE THAN 12" OF FRESH CONCRETE IS CAST BELOW THE SPLICE.
2. SPLICES BASED ON 3/4" MIN COVER

HOOK LENGTHS (H) (IN INCHES)

BAR SIZE	STANDARD HOOKS		STIRRUP OR TIE HOOK			
	90° HOOK	180° HOOK	90° HOOK	135° HOOK	D_2	D_1
#3	6	4	3-1/2	4	1-1/2	2-1/4
#4	8	4-1/2	4-1/2	4-1/2	2	3
#5	10	5	5-1/2	5-1/2	2-1/2	3-3/4
#6	12	6	12	7-1/2	4-1/2	4-1/2
#7	14	7	14	9	–	5-1/2

NOTES:

1. ALL BENDS SHALL BE MADE COLD.
2. #14 & #18 BARS SHALL BE BEND-TESTED AND APPROVED PRIOR TO BENDING.

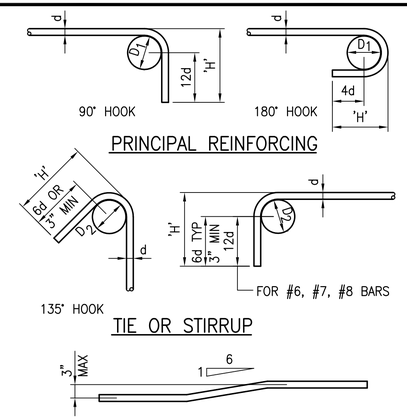

1 TYP FOOTING BAR SPLICE TABLE
NOT TO SCALE

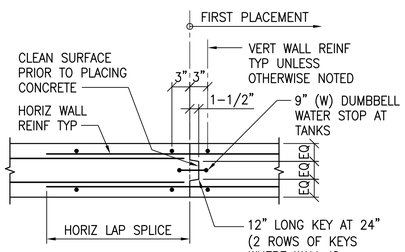

PLAN

NOTES:

1. PROVIDE CONSTRUCTION JOINT AT 30'-0" OC MAX.
2. LOCATION AND DETAIL OF JOINT SHALL BE APPROVED BY ENGINEER PRIOR TO CONSTRUCTING FORMS OR PLACING CONCRETE.

4 VERT WALL CONSTRUCTION JOINTS
NOT TO SCALE

2 TYP SLAB AND WALL BAR SPLICE TABLE
NOT TO SCALE

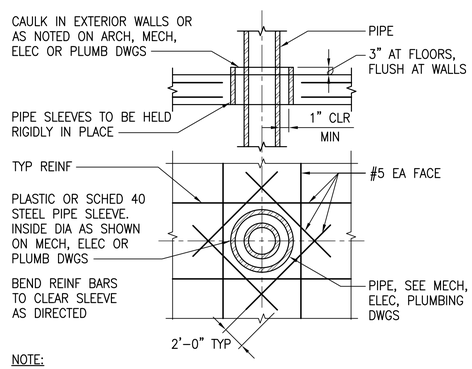

NOTE:
THIS DETAIL APPLIES TO INDIVIDUAL PIPE SLEEVE LOCATIONS ONLY. WHEN SLEEVES ARE LESS THAN 3 SLEEVES DIAMETERS APART AND/OR 2 OR MORE SLEEVES ARE LINED UP, SPECIAL REINFORCING MAY BE NEEDED. SEE OTHER DETAILS OR CONSULT THE ENGINEER.

5 TYP REINF AT WALL / SLAB PIPE SLEEVES
NOT TO SCALE

3 BAR BENDS AND HOOKS
NOT TO SCALE

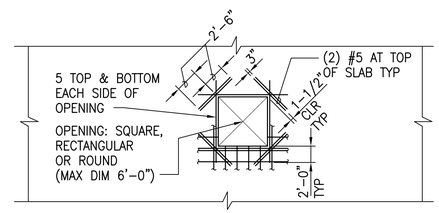

PLAN

NOTES:

1. ALL TOP AND BOTTOM SLAB BARS INTERRUPTED BY OPENING SHALL BE REPLACED BY ADDITIONAL REINFORCING EQUAL TO THAT INTERRUPTED. PLACE HALF OF THE ADDITIONAL REINFORCING ON EACH SIDE OF OPENING AND EXTEND SAME LENGTH AS REQUIRED FOR INTERRUPTED REINFORCING.
2. BOXED OUT OPENINGS, BOXED RECESSES AND PIPE SLEEVE CLUSTERS SHALL BE TREATED AS FRAMED SLAB OPENINGS.
3. OPENINGS $\leq$ 1'-4" SQUARE OR IN DIAMETER NEED NOT HAVE ADDITIONAL DIAGONAL REINF NOR (2) #5 EACH SIDE. NOTE #1 STILL APPLIES.

6 TYP REINFORCING AROUND STRUCTURAL SLAB OPENINGS
NOT TO SCALE

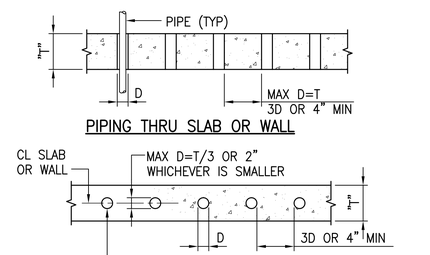

NOTE: WHERE CLEAR DISTANCE BETWEEN SLEEVES IS IMPOSSIBLE OR MAX D IS EXCEEDED, THIS AREA SHALL BE TREATED AS AN OPENING PER TYPICAL DETAIL FOR OPENINGS ON SLAB OR WALL.

7 TYP PIPING AND CONDUIT IN OR THRU SLAB OR WALL
NOT TO SCALE

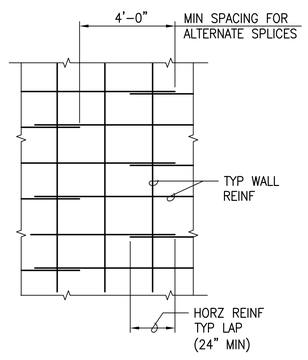

8 TYPICAL WALL REINFORCING
NOT TO SCALE

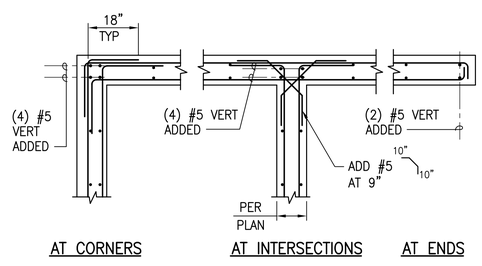

9 TYP DOUBLE LAYER REINF PLAN
NOT TO SCALE

NOTE #1:
VERTICAL AND HORIZONTAL BARS INTERRUPTED BY OPENING SHALL BE REPLACED BY ADDITIONAL REINFORCING EQUAL TO THAT INTERRUPTED. PLACE HALF OF THE ADDITIONAL REINFORCING ON EACH SIDE OF THE OPENING, (2) #5 MIN EACH SIDE (3" CC).

NOTE #2:
(2) #5 BARS 4'-3" LONGER THAN OPENING 5'-0" OR LESS
(2) #6 BARS 5'-0" LONGER THAN OPENING 5'-1" TO 7'-0"
(2) #7 BARS 5'-9" LONGER THAN OPENING 7'-1" TO 9'-0"

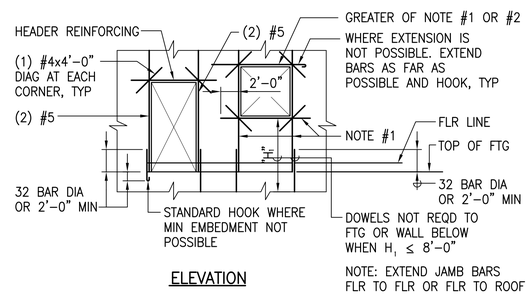

ELEVATION

NOTE: EXTEND JAMB BARS FLR TO FLR OR FLR TO ROOF

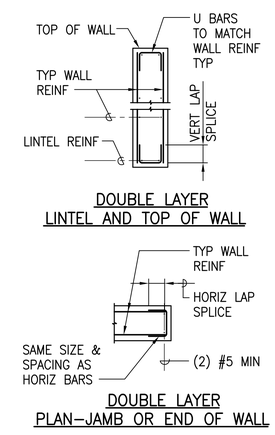

10 MINIMUM REINFORCING AT CONCRETE WALL OPENING, UON
NOT TO SCALE

AustinTsutsumi & ASSOCIATES, INC.
CIVIL ENGINEERS I SURVEYORS
HONOLULU I WAILUKU I HILO, HAWAII
501 SUMNER STREET, SUITE 521
HONOLULU, HAWAII 96817
PHONE: 808-533-3646
FAX: 808-526-1267

STATE OF HAWAII
DEPARTMENT OF HAWAIIAN HOME LANDS

PULEHUNUI REGIONAL INFRASTRUCTURE

AUSTIN, TSUTSUMI & ASSOC., INC.
ENGINEERS, SURVEYORS • HONOLULU, HAWAII

GEORGE O. GUTIERREZ JR.
LICENSED PROFESSIONAL ENGINEER
NO. 12107-S
HAWAII, U.S.A.

This work was prepared by me or under my supervision and construction of this project will be under my observation. (Observation of construction as defined in Chapter 16-115 Subchapter 1 Definitions of the Hawaii Administrative Rules "Professional Engineers, Architects, Surveyors, and Landscape Architects.")

SIGNATURE — APRIL 30, 2020 — EXP. DATE OF THE LICENSE

0 1 2
LINE IS 2 INCHES AT FULL SIZE
(If NOT 2-inches : Scale Accordingly)

REVISION	DATE	BRIEF	BY

Project No:	16-576
Scale:	AS NOTED
Date:	1/22/20
Designed By:	CK
Drawn By:	LL
Checked By:	GG

TYPICAL DETAILS – CONCRETE

DWG. NO.
S-4

FILE	POCKET	FOLDER	NO.

JOB NO. 0-11-056.004
FN: F:\19JOB.DWG\19060 DHHL PULEHUNUI\DWGS_19060\STRUCT_19060\DWGS_19060\DRAWINGS.DWG

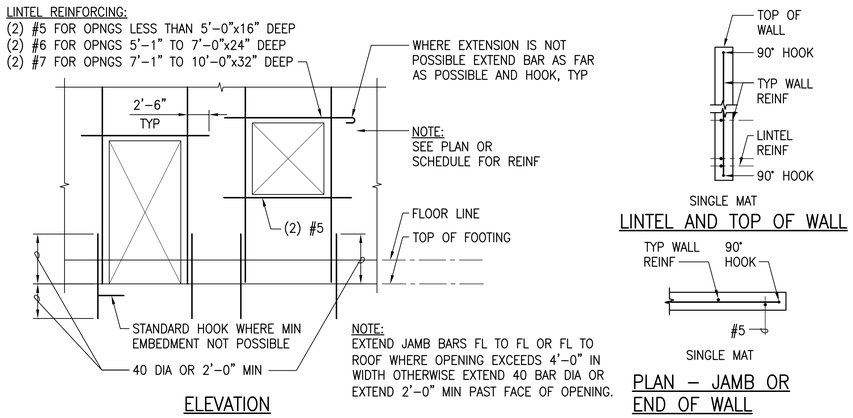

1 MINIMUM REINFORCING AT MASONRY WALL OPENINGS
NOT TO SCALE

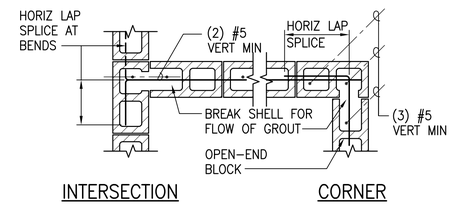

2 CONC MASONRY WALL INTERSECTIONS
NOT TO SCALE

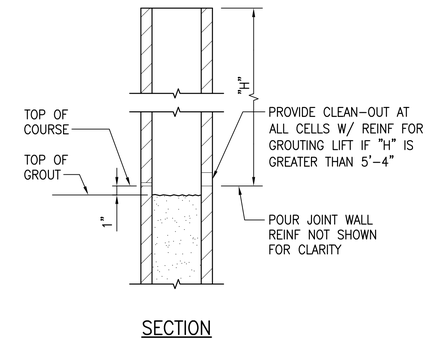

3 HORIZ CONSTR JT IN MASONRY WALL
NOT TO SCALE

AustinTsutsumi
& ASSOCIATES, INC.
CIVIL ENGINEERS I SURVEYORS
HONOLULU I WAILUKU I HILO, HAWAII

501 SUMNER STREET, SUITE 521
HONOLULU, HAWAII 96817

PHONE: 808-533-3646
FAX: 808-526-1267

STATE OF HAWAII
DEPARTMENT OF
HAWAIIAN HOME LANDS

PULEHUNUI
REGIONAL
INFRASTRUCTURE

AUSTIN, TSUTSUMI & ASSOC., INC.
ENGINEERS, SUVEYORS • HONOLULU, HAWAII

GEORGE O. GUTIERREZ JR.
LICENSED PROFESSIONAL ENGINEER
NO. 12107-S
HAWAII, U.S.A.

This work was prepared by me or under my supervision and construction of this project will be under my observation. (Observation of construction as defined in Chapter 16-115 Subchapter 1 Definitions of the Hawaii Administrative Rules "Professional Engineers, Architects, Surveyors, and Landscape Architects.")

SIGNATURE — APRIL 30, 2020 EXP. DATE OF THE LICENSE

0 1 2
LINE IS 2 INCHES AT FULL SIZE
(If NOT 2-inches : Scale Accordingly)

REVISION	DATE	BRIEF	BY

Project No:	16-576
Scale:	AS NOTED
Date:	1/22/20
Designed By:	CK
Drawn By:	LL
Checked By:	GG

TYPICAL DETAILS
– CMU

DWG. NO.
S-5

SHEET 135 OF 201

FILE	POCKET	FOLDER	NO.

JOB NO. 0-11-056.004
F/N: F:\19JOB.DWG\19060 DHHL PULEHUNUI\DWGS_19060\STRUCT_19060\DWGS_19060\DRAWINGS.DWG

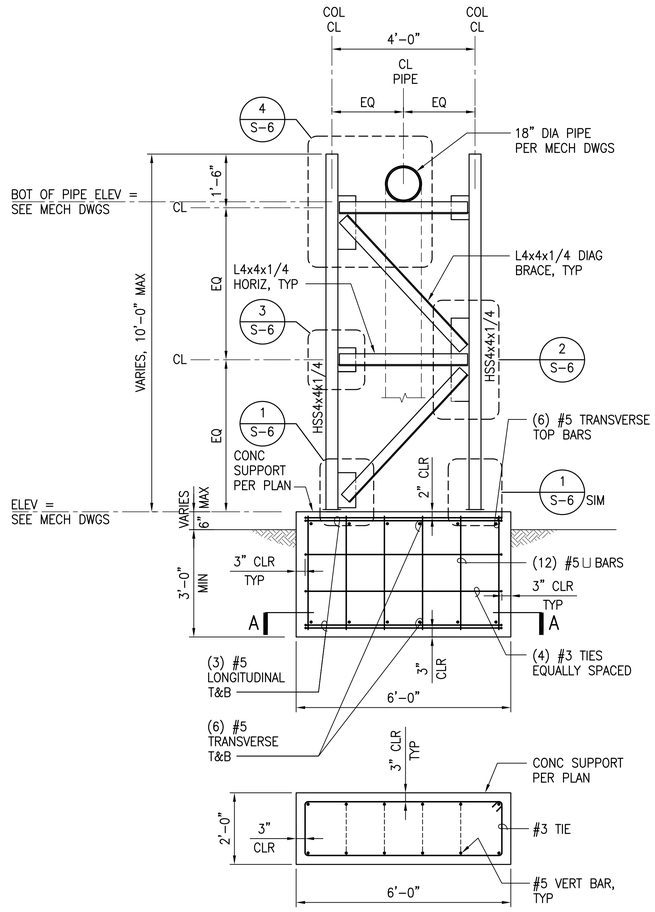

PLAN A–A

NOTE:

ALL STEEL AND CONNECTORS SHALL BE HOT–DIPPED GALVANIZED AFTER FABRICATION AND CONFORM TO ASTM A123 REQUIREMENTS. SEE STRUCTURAL STEEL NOTES ON SHEET S–2. ALL HOT–DIPPED GALVANIZED STRUCTURAL STEEL, BOLTS AND ATTACHMENTS SHALL BE PAINTED PER STRUCTURAL STEEL NOTE #10 ON SHEET S–2.

A FRAME ELEVATION - PIPE SUPPORT
SCALE: 1/2" = 1'–0"

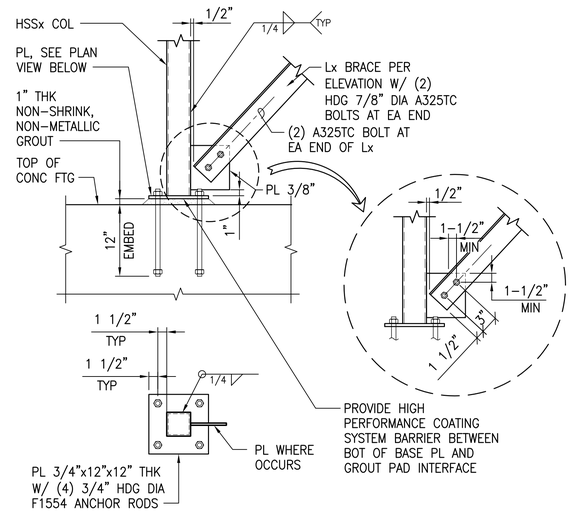

PL – PLAN VIEW

1 DETAIL
SCALE: 1" = 1'–0"

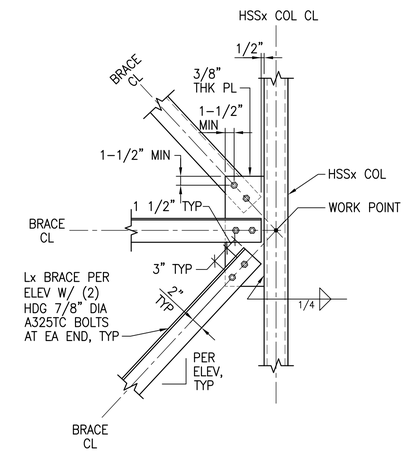

2 DETAIL
SCALE: 1" = 1'–0"

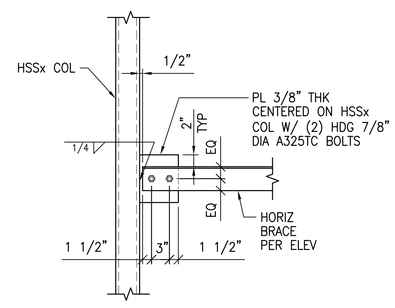

3 DETAIL
SCALE: 1" = 1'–0"

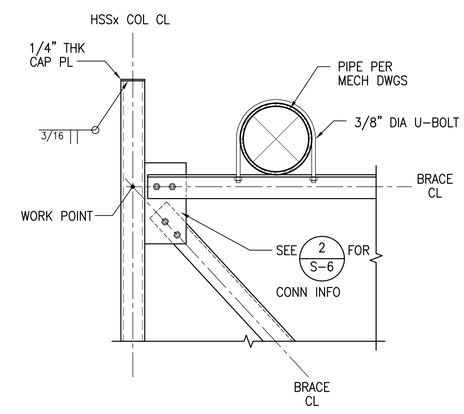

4 DETAIL
SCALE: 1" = 1'–0"

GRAPHIC SCALE

0 6" 1' 2' 4' 6'
1/2"=1'–0"

0 3" 6" 1' 2' 3'
1"=1'–0"

AustinTsutsumi & ASSOCIATES, INC.
CIVIL ENGINEERS I SURVEYORS
HONOLULU I WAILUKU I HILO, HAWAII

501 SUMNER STREET, SUITE 521
HONOLULU, HAWAII 96817

PHONE: 808-533-3646
FAX: 808-526-1267

STATE OF HAWAII
DEPARTMENT OF
HAWAIIAN HOME LANDS

PULEHUNUI
REGIONAL
INFRASTRUCTURE

AUSTIN, TSUTSUMI & ASSOC., INC.
ENGINEERS, SURVEYORS • HONOLULU, HAWAII

GEORGE O. GUTIERREZ JR.
LICENSED PROFESSIONAL ENGINEER
NO. 12107–S
HAWAII, U.S.A.

This work was prepared by me or under my supervision and construction of this project will be under my observation. (Observation of construction as defined in Chapter 16-115 Subchapter 1 Definitions of the Hawaii Administrative Rules "Professional Engineers, Architects, Surveyors, and Landscape Architects.")

SIGNATURE — APRIL 30, 2020 — EXP. DATE OF THE LICENSE

0 1 2
LINE IS 2 INCHES AT FULL SIZE
(If NOT 2–inches : Scale Accordingly)

REVISION	DATE	BRIEF	BY

Project No:	16-576
Scale:	AS NOTED
Date:	1/22/20
Designed By:	CK
Drawn By:	LL
Checked By:	GG

PIPE SUPPORT DETAILS

DWG. NO.
S-6

SHEET 136 OF 201

FILE	POCKET	FOLDER	NO.

JOB NO. 0–11–056.004
FN: F:\19JOB.DWG\19060_DHHL PULEHUNUI\DWGS_19060\STRUCT_19060\DWGS_19060\DRAWINGS.DWG

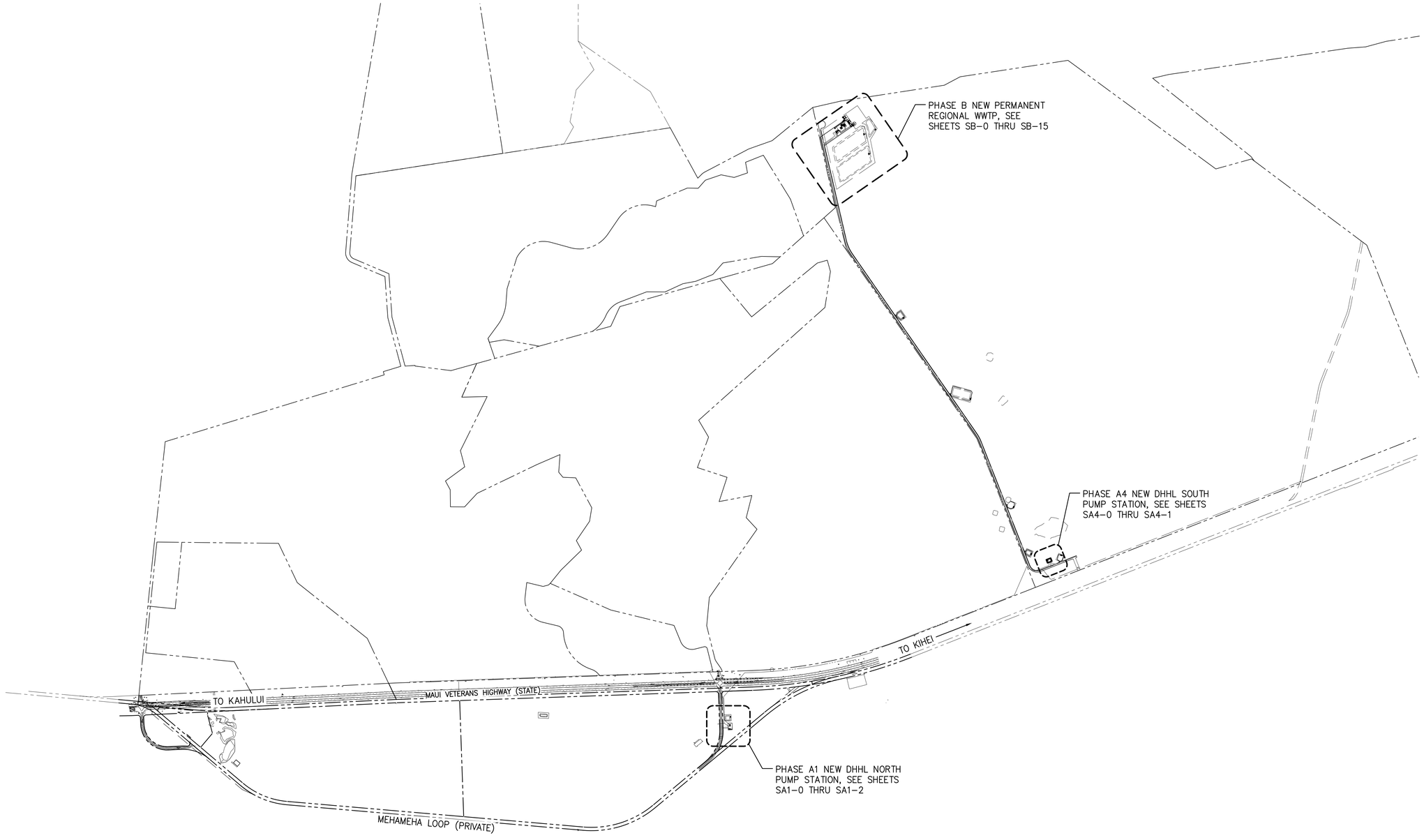

NORTH

OVERALL PROJECT SITE PLAN

SCALE: 1"=600'

NOTE:
SEE CIVIL SITE PLAN FOR ADDITIONAL INFORMATION.

JOB NO. O-11-056.004
FN: F:\19JOB.DWG\19060 DHHL PULEHUNUI\DWGS_19060\STRUCT_19060\DWGS_19060\S-7_SITE MAP.DWG

AustinTsutsumi
& ASSOCIATES, INC.
CIVIL ENGINEERS I SURVEYORS
HONOLULU I WAILUKU I HILO, HAWAII

501 SUMNER STREET, SUITE 521
HONOLULU, HAWAII 96817

PHONE: 808-533-3646
FAX: 808-526-1267

STATE OF HAWAII
DEPARTMENT OF
HAWAIIAN HOME LANDS

PULEHUNUI
REGIONAL
INFRASTRUCTURE

AUSTIN, TSUTSUMI & ASSOC., INC.
ENGINEERS, SUVEYORS • HONOLULU, HAWAII

GEORGE O. GUTIERREZ JR.
LICENSED PROFESSIONAL ENGINEER
NO. 12107-S
HAWAII, U.S.A.

This work was prepared by me or under my supervision and construction of this project will be under my observation. (Observation of construction as defined in Chapter 16-115 Subchapter 1 Definitions of the Hawaii Administrative Rules "Professional Engineers, Architects, Surveyors, and Landscape Architects.")

SIGNATURE — APRIL 30, 2020 EXP. DATE OF THE LICENSE

0 1 2
LINE IS 2 INCHES AT FULL SIZE
(If NOT 2-inches : Scale Accordingly)

REVISION	DATE	BRIEF	BY

Project No:	16-576
Scale:	AS NOTED
Date:	1/22/20
Designed By:	CK
Drawn By:	LL
Checked By:	GG

OVERALL PROJECT
SITE PLAN

DWG. NO.
S-7

SHEET 137 OF 201

FILE	POCKET	FOLDER	NO.

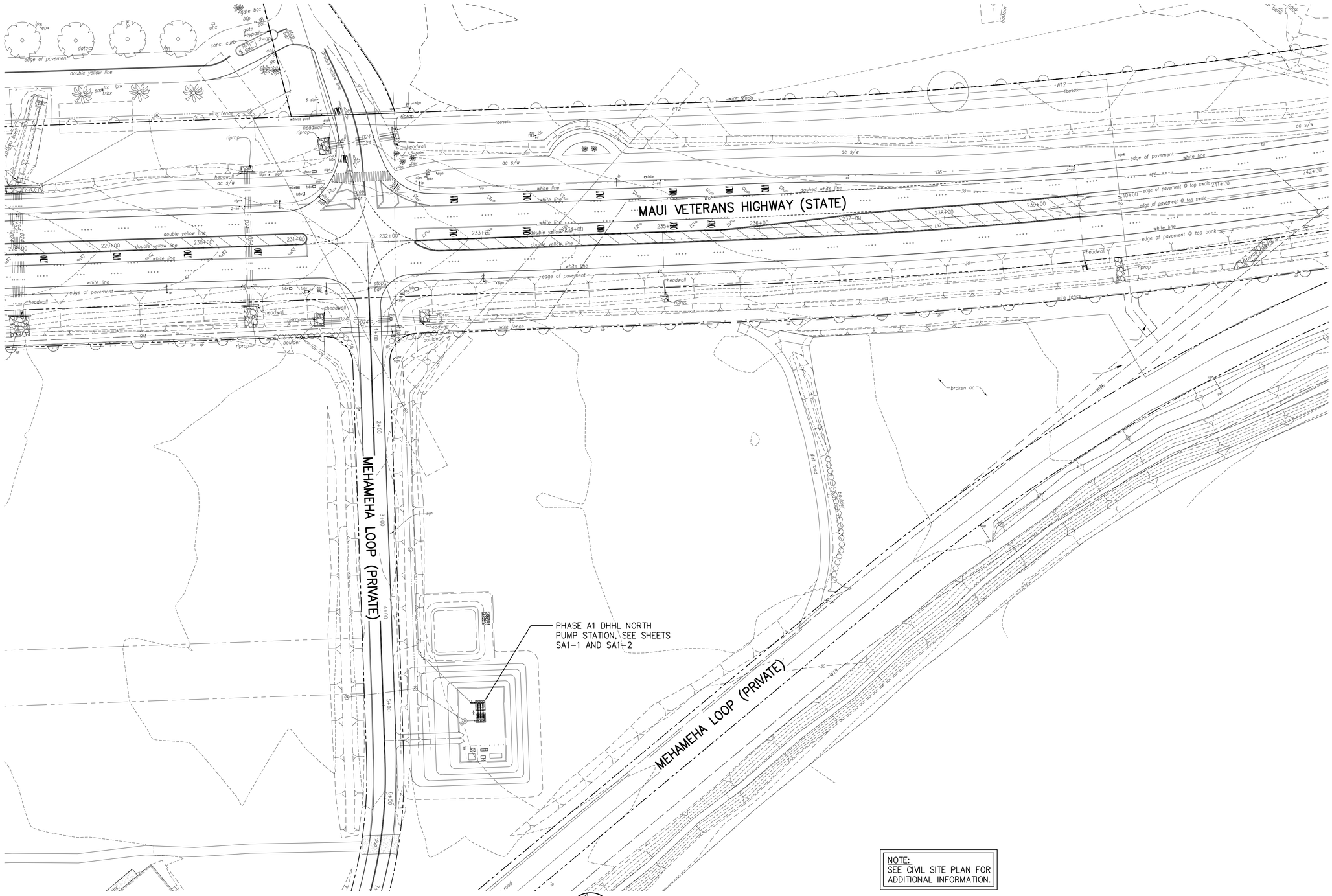

NOTE:
SEE CIVIL SITE PLAN FOR ADDITIONAL INFORMATION.

NORTH PUMP STATION SITE PLAN

SCALE: 1"=50'

AustinTsutsumi
& ASSOCIATES, INC.
CIVIL ENGINEERS I SURVEYORS
HONOLULU I WAILUKU I HILO, HAWAII

501 SUMNER STREET, SUITE 521
HONOLULU, HAWAII 96817

PHONE: 808-533-3646
FAX: 808-526-1267

STATE OF HAWAII
DEPARTMENT OF
HAWAIIAN HOME LANDS

PULEHUNUI
REGIONAL
INFRASTRUCTURE

AUSTIN, TSUTSUMI & ASSOC., INC.
ENGINEERS, SURVEYORS • HONOLULU, HAWAII

GEORGE O. GUTIERREZ JR.
LICENSED PROFESSIONAL ENGINEER
NO. 12107-S
HAWAII, U.S.A.

This work was prepared by me or under my supervision and construction of this project will be under my observation. (Observation of construction as defined in Chapter 16-115 Subchapter 1 Definitions of the Hawaii Administrative Rules "Professional Engineers, Architects, Surveyors, and Landscape Architects.")

SIGNATURE — APRIL 30, 2020 EXP. DATE OF THE LICENSE

0 1 2
LINE IS 2 INCHES AT FULL SIZE
(If NOT 2-inches : Scale Accordingly)

REVISION	DATE	BRIEF	BY

Project No:	16-576
Scale:	AS NOTED
Date:	1/22/20
Designed By:	CK
Drawn By:	LL
Checked By:	GG

NORTH PUMP
STATION SITE PLAN

DWG. NO.
SA1-0

SHEET 138 OF 201

FILE	POCKET	FOLDER	NO.

JOB NO. 0-11-056.004
FN: F:\19JOB.DWG\19060 DHHL PULEHUNUI\DWGS_19060\STRUCT_19060\DWGS_19060\SA1-0, SA4-0, SB-0_MAPS.DWG

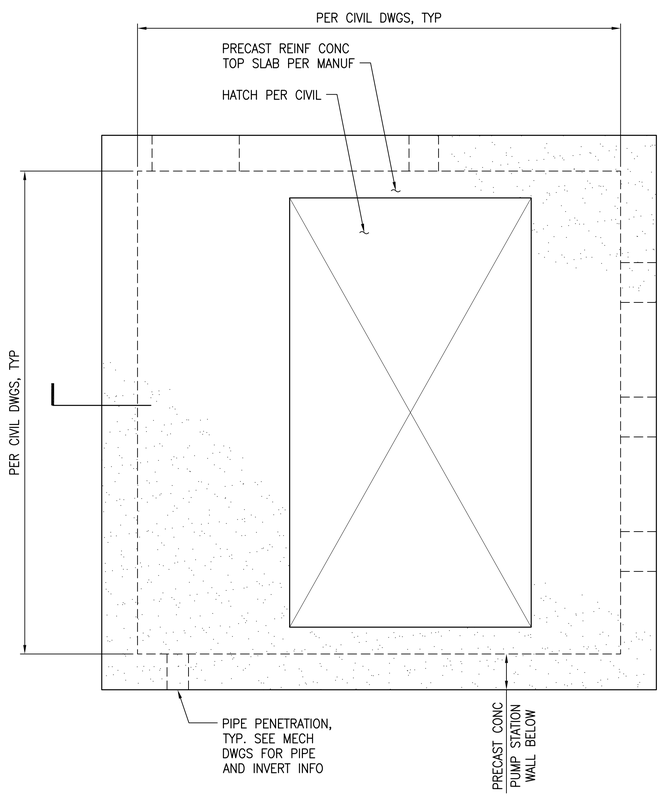

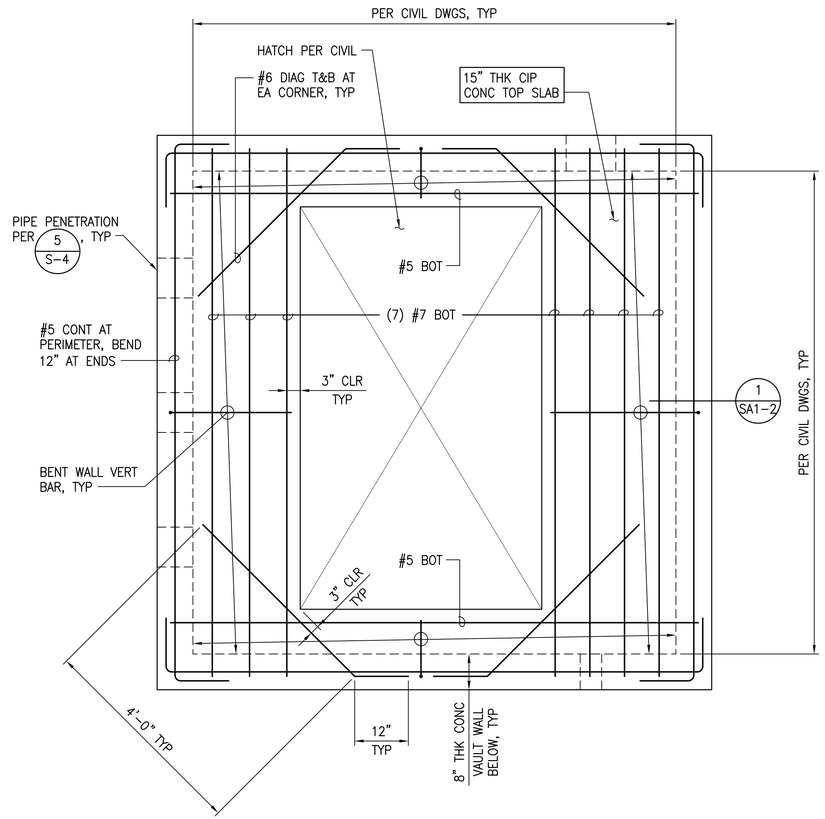

NOTES:

1. REFER TO CIVIL/MECHANICAL DRAWINGS FOR ELEVATIONS AND DIMENSIONS NOT SHOWN, LOCATION OF WELL PIPES, EQUIPMENT SUPPORTS, ACCESS HATCH, ETC.
2. FOR ADDITIONAL INFORMATION SEE NOTES ON SHEET SA1-2.

A NORTH PUMP STATION PLAN

SCALE: 3/4" = 1'-0"

NORTH

GRAPHIC SCALE

0 6" 1' 2' 4'

3/4"=1'-0"

AustinTsutsumi & ASSOCIATES, INC.
CIVIL ENGINEERS I SURVEYORS
HONOLULU I WAILUKU I HILO, HAWAII

501 SUMNER STREET, SUITE 521
HONOLULU, HAWAII 96817

PHONE: 808-533-3646
FAX: 808-526-1267

STATE OF HAWAII
DEPARTMENT OF
HAWAIIAN HOME LANDS

PULEHUNUI
REGIONAL
INFRASTRUCTURE

AUSTIN, TSUTSUMI & ASSOC., INC.
ENGINEERS, SUVEYORS • HONOLULU, HAWAII

GEORGE O. GUTIERREZ JR.
LICENSED PROFESSIONAL ENGINEER
NO. 12107-S
HAWAII, U.S.A.

This work was prepared by me or under my supervision and construction of this project will be under my observation. (Observation of construction as defined in Chapter 16-115 Subchapter 1 Definitions of the Hawaii Administrative Rules "Professional Engineers, Architects, Surveyors, and Landscape Architects.")

SIGNATURE — APRIL 30, 2020 EXP. DATE OF THE LICENSE

0 1 2
LINE IS 2 INCHES AT FULL SIZE
(If NOT 2-inches : Scale Accordingly)

REVISION	DATE	BRIEF	BY

Project No:	16-576
Scale:	AS NOTED
Date:	1/22/20
Designed By:	CK
Drawn By:	LL
Checked By:	GG

NORTH PUMP STATION PLAN

DWG. NO.

SA1-1

SHEET 139 OF 201

FILE	POCKET	FOLDER	NO.

JOB NO. 0-11-056.004
FN: F:\19JOB.DWG\19060 DHHL PULEHUNUI\DWGS_19060\STRUCT_19060\DWGS_19060\DRAWINGS.DWG

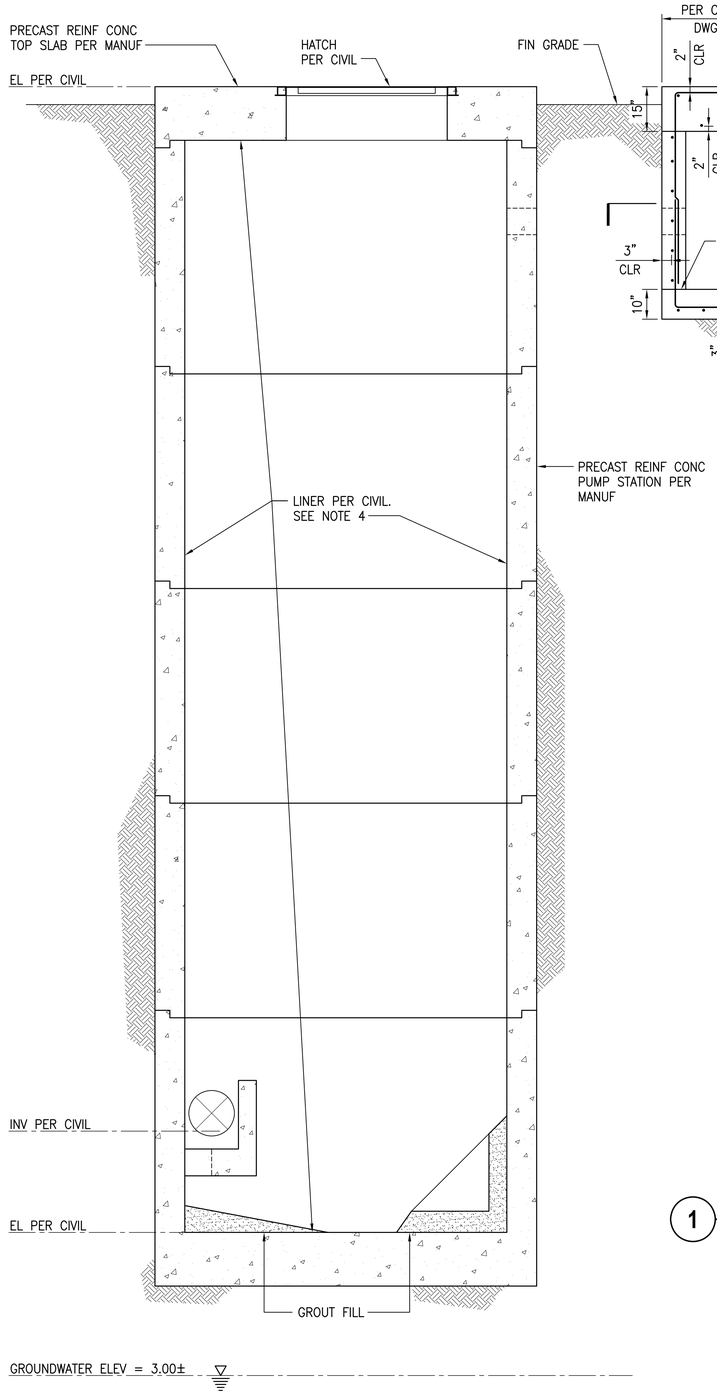

1 **NORTH PUMP STATION SECTION**
SCALE: 1/2" = 1'-0"

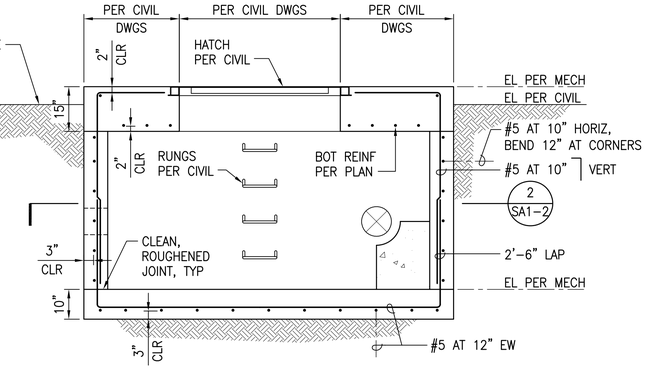

NOTES:

1. PRECAST REINFORCED CONCRETE STRUCTURES SHALL BE DESIGNED BY A HAWAII LICENSED STRUCTURAL ENGINEER. ALL SHOP DRAWINGS AND CALCULATIONS SHALL BE STAMPED AND SIGNED BY THE SAME ENGINEER PRIOR TO SUBMITTAL BY CONTRACTOR TO CONTRACTING OFFICER.

2. REFER TO CIVIL/MECHANICAL DRAWINGS FOR ELEVATIONS AND DIMENSIONS NOT SHOWN, LOCATION OF WELL PIPES, EQUIPMENT SUPPORTS, ACCESS HATCH, ETC.

3. PRECAST REINFORCED CONCRETE STRUCTURES SHALL BE DESIGNED FOR THE FOLLOWING AS A MINIMUM:

   VERTICAL LOADS:
   A. DEAD LOAD = SELF-WT OF STRUCTURES, MECHANICAL EQUIPMENT AND PIPING, ETC.

   B. LIVE LOAD = AASHTO HL-93 TRUCK AXLE LOADING.

   C. BUOYANCY / UPLIFT FORCES DUE TO GROUNDWATER (AS APPLICABLE)

   LATERAL LOADS:
   D. SURCHARGE LOAD = 250 PSF

   E. LATERAL SOIL PRESSURE (ABOVE GROUNDWATER) = 40 PCF (ACTIVE/NON-RESTRAINED)
   = 58 PCF (PASSIVE/RESTRAINED)

   LATERAL SOIL PRESSURE (BELOW GROUNDWATER) = 88 PCF (ACTIVE/NON-RESTRAINED)
   = 190 PCF (PASSIVE/RESTRAINED)

4. LINER PER CIVIL SHALL BE INSTALLED ON ALL INTERIOR SURFACES OF PUMP STATION AND ON BOTTOM OF TOP SLAB.

5. FOR CONCRETE AND REINFORCING STEEL REQUIREMENTS, SEE SHEETS S-1 AND S-2.

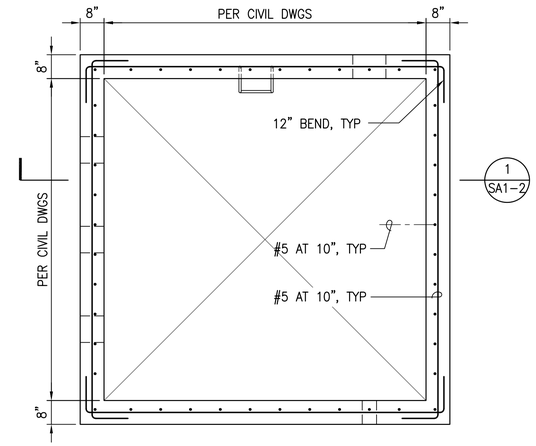

PLAN

2 **NORTH PUMP STATION PLAN SECTION**
SCALE: 1/2" = 1'-0"

GRAPHIC SCALE

0 6" 1' 2' 4' 6'
1/2"=1'-0"

AustinTsutsumi
& ASSOCIATES, INC.
CIVIL ENGINEERS I SURVEYORS
HONOLULU I WAILUKU I HILO, HAWAII

501 SUMNER STREET, SUITE 521
HONOLULU, HAWAII 96817

PHONE: 808-533-3646
FAX: 808-526-1267

STATE OF HAWAII
DEPARTMENT OF
HAWAIIAN HOME LANDS

PULEHUNUI
REGIONAL
INFRASTRUCTURE

AUSTIN, TSUTSUMI & ASSOC., INC.
ENGINEERS, SUVEYORS • HONOLULU, HAWAII

GEORGE O. GUTIERREZ JR.
LICENSED PROFESSIONAL ENGINEER
NO. 12107-S
HAWAII, U.S.A.

This work was prepared by me or under my supervision and construction of this project will be under my observation. (Observation of construction as defined in Chapter 16-115 Subchapter 1 Definitions of the Hawaii Administrative Rules "Professional Engineers, Architects, Surveyors, and Landscape Architects.")

SIGNATURE — APRIL 30, 2020 EXP. DATE OF THE LICENSE

0 1 2
LINE IS 2 INCHES AT FULL SIZE
(If NOT 2-inches : Scale Accordingly)

REVISION	DATE	BRIEF	BY

Project No:	16-576
Scale:	AS NOTED
Date:	1/22/20
Designed By:	CK
Drawn By:	LL
Checked By:	GG

NORTH PUMP
STATION SECTION

DWG. NO.
SA1-2

FILE	POCKET	FOLDER	NO.

JOB NO. O-11-056.004
FN: F:\19JOB.DWG\19060 DHHL PULEHUNUI\DWGS_19060\STRUCT_19060\DWGS_19060\DRAWINGS.DWG

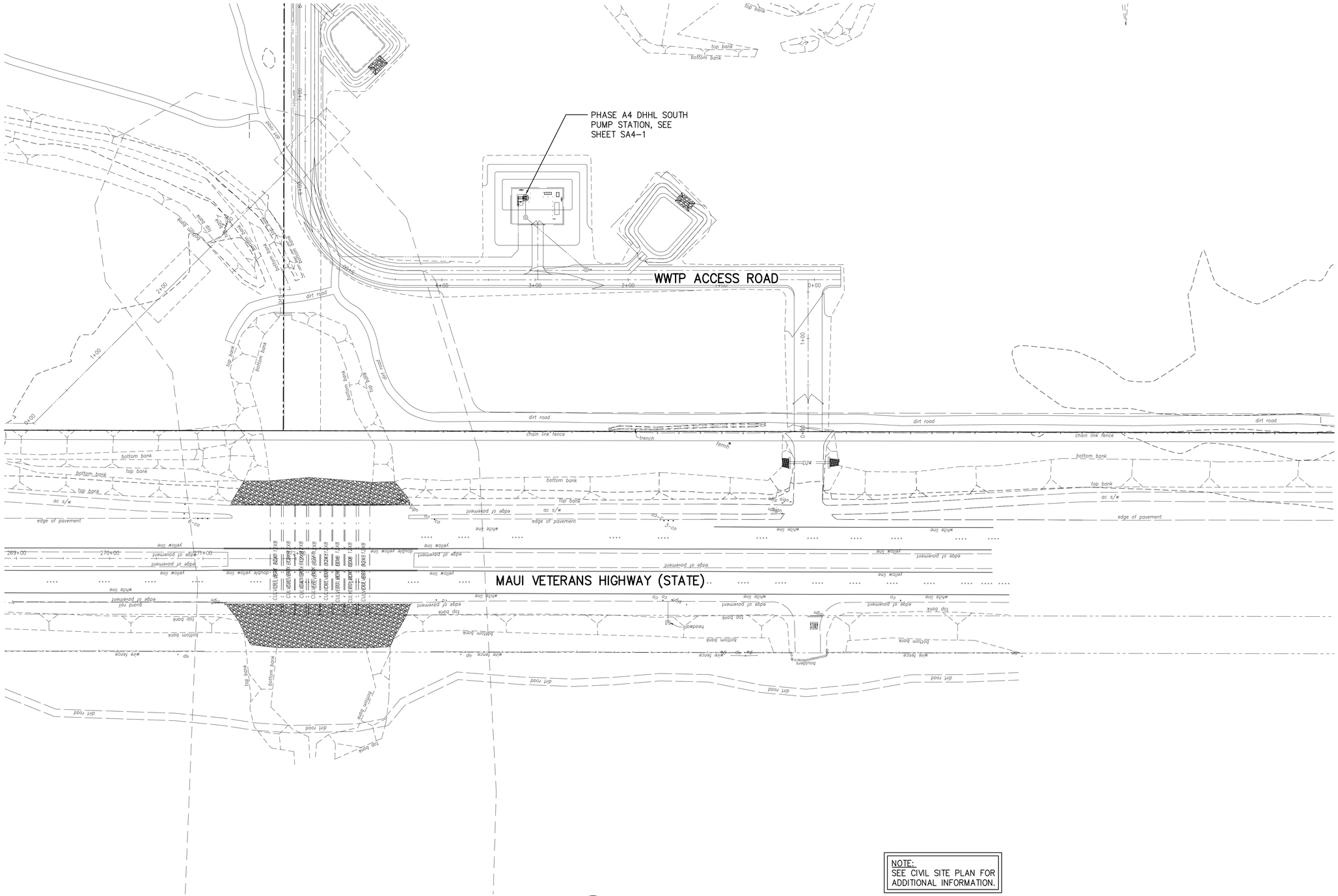

NOTE:
SEE CIVIL SITE PLAN FOR ADDITIONAL INFORMATION.

SOUTH PUMP STATION SITE PLAN

SCALE: 1"=50'

AustinTsutsumi
& ASSOCIATES, INC.
CIVIL ENGINEERS I SURVEYORS
HONOLULU I WAILUKU I HILO, HAWAII

501 SUMNER STREET, SUITE 521
HONOLULU, HAWAII 96817

PHONE: 808-533-3646
FAX: 808-526-1267

STATE OF HAWAII
DEPARTMENT OF
HAWAIIAN HOME LANDS

PULEHUNUI
REGIONAL
INFRASTRUCTURE

AUSTIN, TSUTSUMI & ASSOC., INC.
ENGINEERS, SUVEYORS • HONOLULU, HAWAII

GEORGE O. GUTIERREZ JR.
LICENSED PROFESSIONAL ENGINEER
NO. 12107-S
HAWAII, U.S.A.

This work was prepared by me or under my supervision and construction of this project will be under my observation. (Observation of construction as defined in Chapter 16-115 Subchapter 1 Definitions of the Hawaii Administrative Rules "Professional Engineers, Architects, Surveyors, and Landscape Architects.")

SIGNATURE — APRIL 30, 2020 EXP. DATE OF THE LICENSE

0 1 2
LINE IS 2 INCHES AT FULL SIZE
(If NOT 2-inches : Scale Accordingly)

REVISION	DATE	BRIEF	BY

Project No:	16-576
Scale:	AS NOTED
Date:	1/22/20
Designed By:	CK
Drawn By:	LL
Checked By:	GG

SOUTH PUMP
STATION SITE PLAN

DWG. NO.
SA4-0

SHEET 141 OF 201

FILE	POCKET	FOLDER	NO.

JOB NO. 0-11-056.004
FN: F:\19.OB DWG\19060 DHHL PULEHUNUI\DWGS_19060\STRUCT_19060\DWGS_19060\SA1-0, SA4-0, SB-0_MAPS.DWG

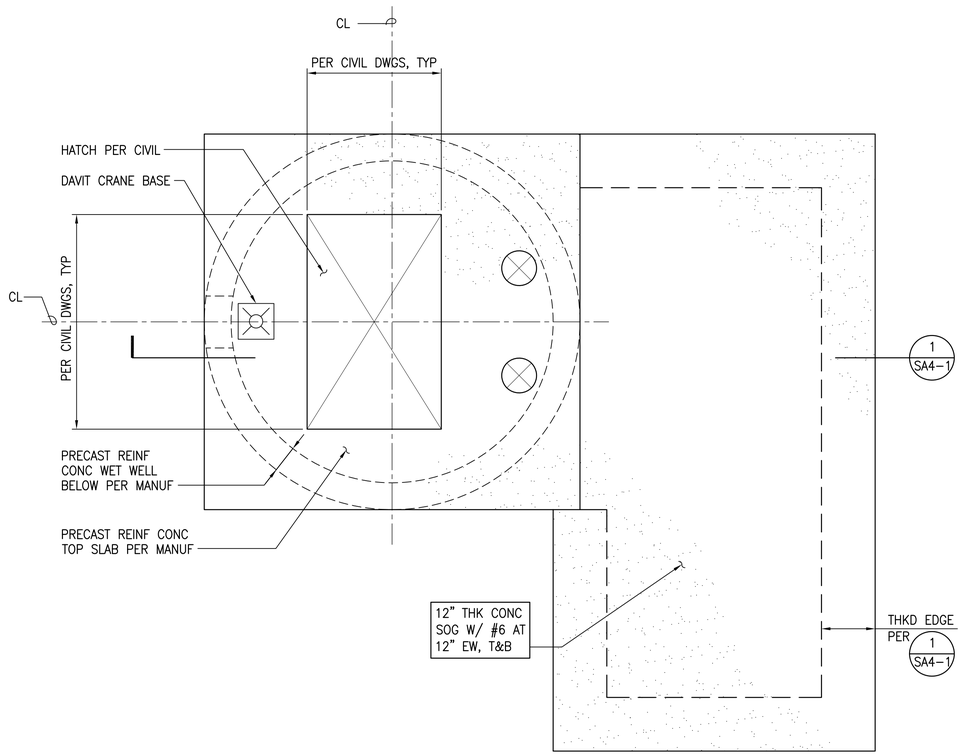

A SOUTH PUMP STATION PLAN

SCALE: 3/4" = 1'-0"

NOTES:

1. PRECAST REINFORCED CONCRETE STRUCTURES SHALL BE DESIGNED BY A HAWAII LICENSED STRUCTURAL ENGINEER. ALL SHOP DRAWINGS AND CALCULATIONS SHALL BE STAMPED AND SIGNED BY THE SAME ENGINEER PRIOR TO SUBMITTAL BY CONTRACTOR TO CONTRACTING OFFICER.

2. REFER TO CIVIL/MECHANICAL DRAWINGS FOR ELEVATIONS AND DIMENSIONS NOT SHOWN, LOCATION OF WELL PIPES, EQUIPMENT SUPPORTS, ACCESS HATCH, ETC.

3. PRECAST REINFORCED CONCRETE STRUCTURES SHALL BE DESIGNED FOR THE FOLLOWING AS A MINIMUM:

   VERTICAL LOADS:
   A. DEAD LOAD = SELF-WT OF STRUCTURES, MECHANICAL EQUIPMENT AND PIPING, ETC.

   B. LIVE LOAD = AASHTO HL-93 TRUCK AXLE LOADING.

   C. BUOYANCY / UPLIFT FORCES DUE TO GROUNDWATER

   LATERAL LOADS:
   D. SURCHARGE LOAD = 250 PSF

   E. LATERAL SOIL PRESSURE (ABOVE GROUNDWATER) = 40 PCF (ACTIVE/NON-RESTRAINED) = 58 PCF (PASSIVE/RESTRAINED)

   LATERAL SOIL PRESSURE (BELOW GROUNDWATER) = 88 PCF (ACTIVE/NON-RESTRAINED) = 190 PCF (PASSIVE/RESTRAINED)

4. LINER PER CIVIL SHALL BE INSTALLED ON ALL INTERIOR SURFACES OF PUMP STATION AND ON BOTTOM OF TOP SLAB.

5. FOR CONCRETE AND REINFORCING STEEL REQUIREMENTS, SEE SHEETS S-1 AND S-2.

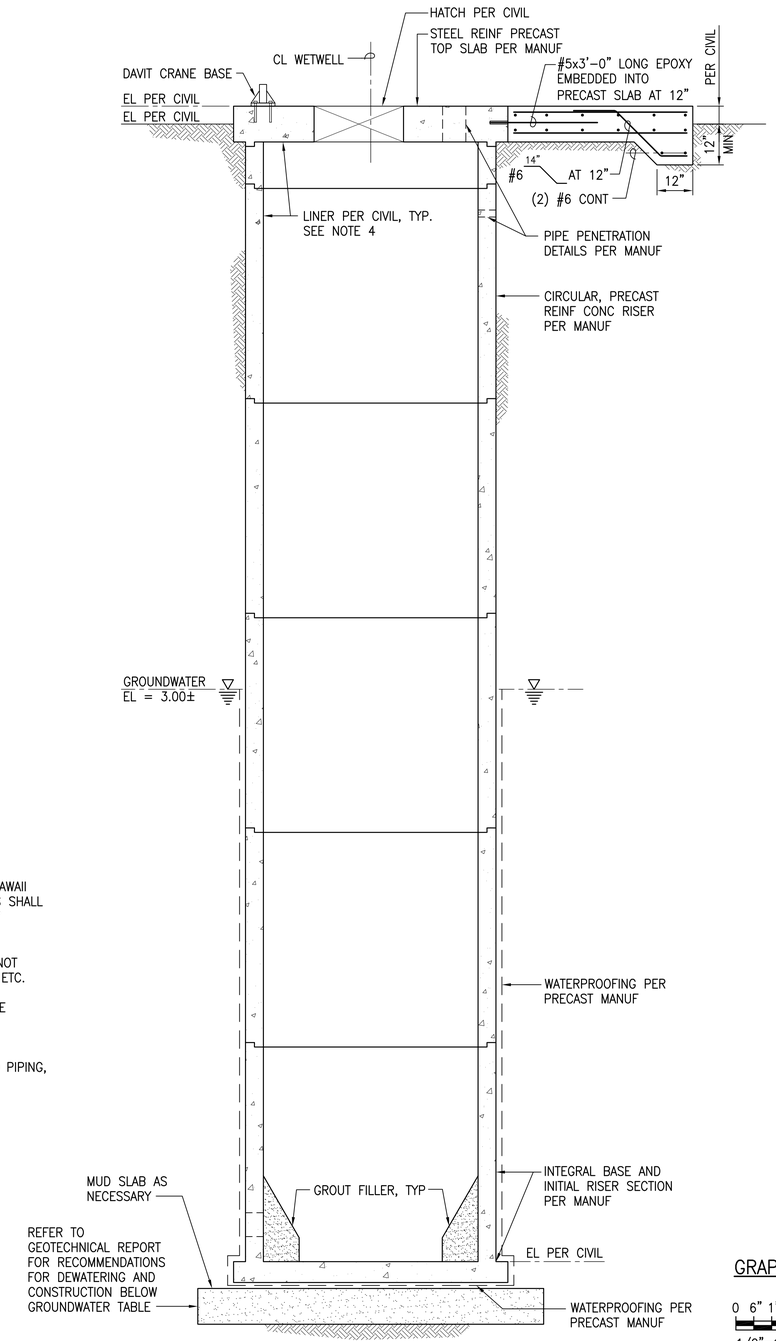

1 SOUTH PUMP STATION SECTION

SCALE: 1/2" = 1'-0"

GRAPHIC SCALE

0 6" 1' 2' 4' 6'
1/2"=1'-0"

0 6" 1' 2' 4'
3/4"=1'-0"

AustinTsutsumi & ASSOCIATES, INC.
CIVIL ENGINEERS I SURVEYORS
HONOLULU I WAILUKU I HILO, HAWAII

501 SUMNER STREET, SUITE 521
HONOLULU, HAWAII 96817

PHONE: 808-533-3646
FAX: 808-526-1267

STATE OF HAWAII
DEPARTMENT OF
HAWAIIAN HOME LANDS

PULEHUNUI
REGIONAL
INFRASTRUCTURE

AUSTIN, TSUTSUMI & ASSOC., INC.
ENGINEERS, SURVEYORS • HONOLULU, HAWAII

GEORGE O. GUTIERREZ JR.
LICENSED PROFESSIONAL ENGINEER
NO. 12107-S
HAWAII, U.S.A.

This work was prepared by me or under my supervision and construction of this project will be under my observation. (Observation of construction as defined in Chapter 16-115 Subchapter 1 Definitions of the Hawaii Administrative Rules "Professional Engineers, Architects, Surveyors, and Landscape Architects.")

SIGNATURE — APRIL 30, 2020 EXP. DATE OF THE LICENSE

0 1 2
LINE IS 2 INCHES AT FULL SIZE
(If NOT 2-inches : Scale Accordingly)

REVISION	DATE	BRIEF	BY

Project No:	16-576
Scale:	AS NOTED
Date:	1/22/20
Designed By:	CK
Drawn By:	LL
Checked By:	GG

SOUTH PUMP STATION PLAN AND SECTION

DWG. NO.
SA4-1

FILE	POCKET	FOLDER	NO.

JOB NO. O-11-056.004
FN: F:\19JOB.DWG\19060 DHHL PULEHUNUI\DWGS_19060\STRUCT_19060\DWGS_19060\DRAWINGS.DWG

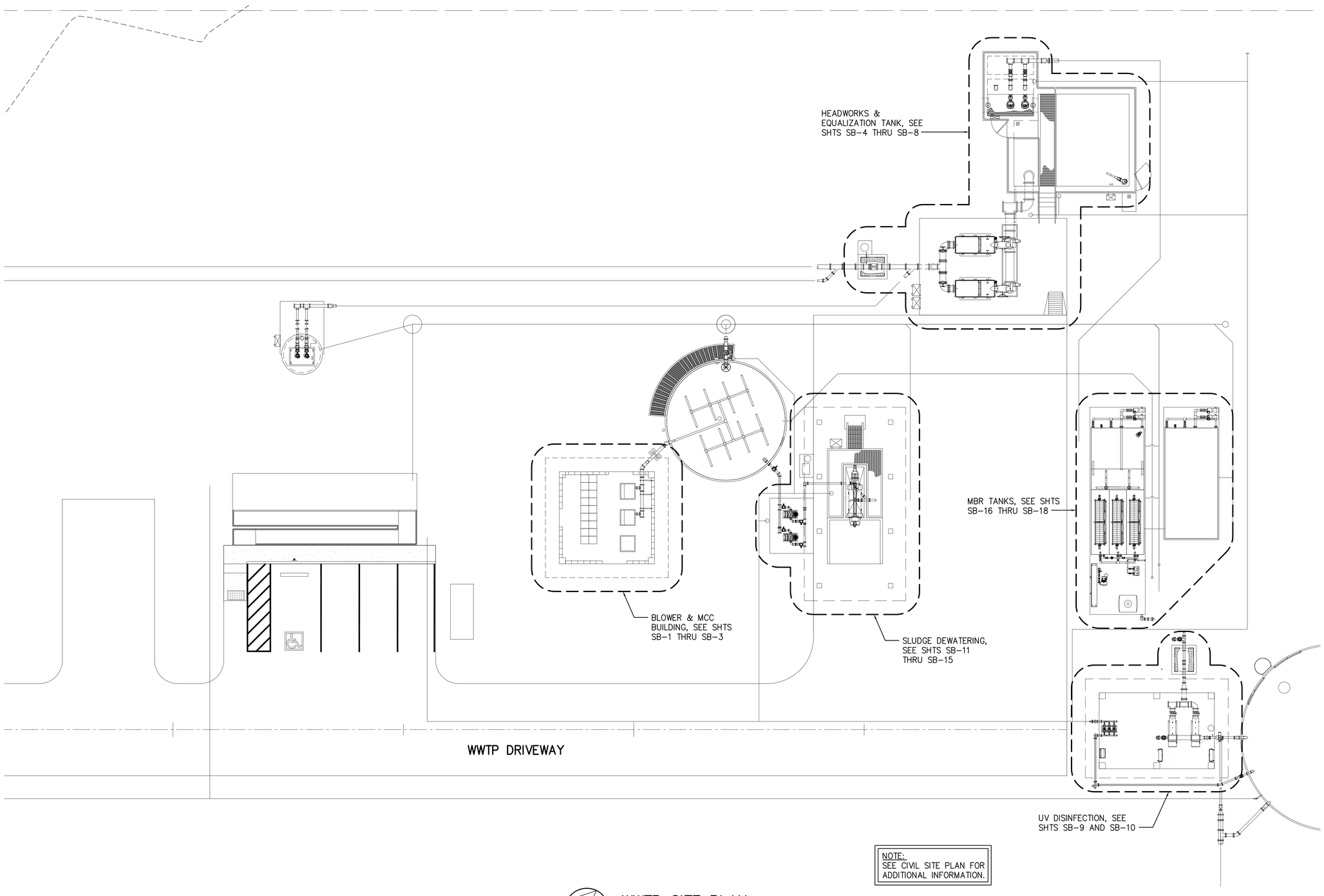

NOTE:
SEE CIVIL SITE PLAN FOR ADDITIONAL INFORMATION.

WWTP SITE PLAN

SCALE: 1"=10'

JOB NO. 0-11-056.004
FN: F:\19JOB.DWG\19060 DHHL PULEHUNUI\DWGS_19060\STRUCT_19060\DWGS_19060\SA1-0, SA4-0, SB-0_MAPS.DWG

AustinTsutsumi
& ASSOCIATES, INC.
CIVIL ENGINEERS I SURVEYORS
HONOLULU I WAILUKU I HILO, HAWAII

501 SUMNER STREET, SUITE 521
HONOLULU, HAWAII 96817

PHONE: 808-533-3646
FAX: 808-526-1267

STATE OF HAWAII
DEPARTMENT OF
HAWAIIAN HOME LANDS

PULEHUNUI
REGIONAL
INFRASTRUCTURE

AUSTIN, TSUTSUMI & ASSOC., INC.
ENGINEERS, SUVEYORS • HONOLULU, HAWAII

GEORGE O. GUTIERREZ JR.
LICENSED PROFESSIONAL ENGINEER
NO. 12107-S
HAWAII, U.S.A.

This work was prepared by me or under my supervision and construction of this project will be under my observation. (Observation of construction as defined in Chapter 16-115 Subchapter 1 Definitions of the Hawaii Administrative Rules "Professional Engineers, Architects, Surveyors, and Landscape Architects.")

SIGNATURE — APRIL 30, 2020 EXP. DATE OF THE LICENSE

0 1 2
LINE IS 2 INCHES AT FULL SIZE
(If NOT 2-inches : Scale Accordingly)

REVISION	DATE	BRIEF	BY

Project No:	16-576
Scale:	AS NOTED
Date:	1/22/20
Designed By:	CK
Drawn By:	LL
Checked By:	GG

WWTP SITE PLAN

DWG. NO.
SB-0

SHEET 143 OF 201

FILE	POCKET	FOLDER	NO.

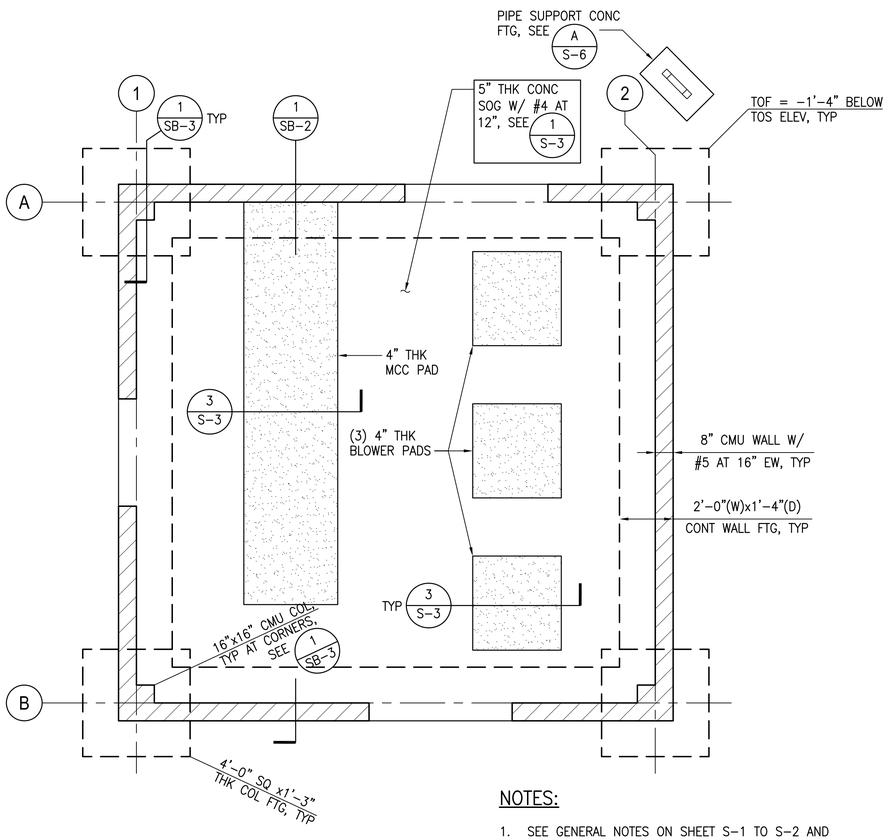

NOTES:

1. SEE GENERAL NOTES ON SHEET S-1 TO S-2 AND TYPICAL DETAILS ON SHEETS S-3 TO S-5 FOR ADDITIONAL INFORMATION.
2. SEE ARCHITECTURAL DRAWINGS FOR ROOFING GUTTERS, DOWNSPOUTS, AND ADDITIONAL INFORMATION.
3. REFER TO CIVIL AND MECHANICAL DRAWINGS FOR SITE PLAN, LOCATION OF STRUCTURES AND ALL INFORMATION AND DIMENSIONS NOT SHOWN ON STRUCTURAL DRAWINGS.
4. SEE 4 / S-3 FOR REQUIREMENTS AT EXCAVATIONS PARALLEL TO BUILDING FOUNDATION.

A BLOWER AND MCC BUILDING FOUNDATION PLAN

SCALE: 3/8" = 1'-0"

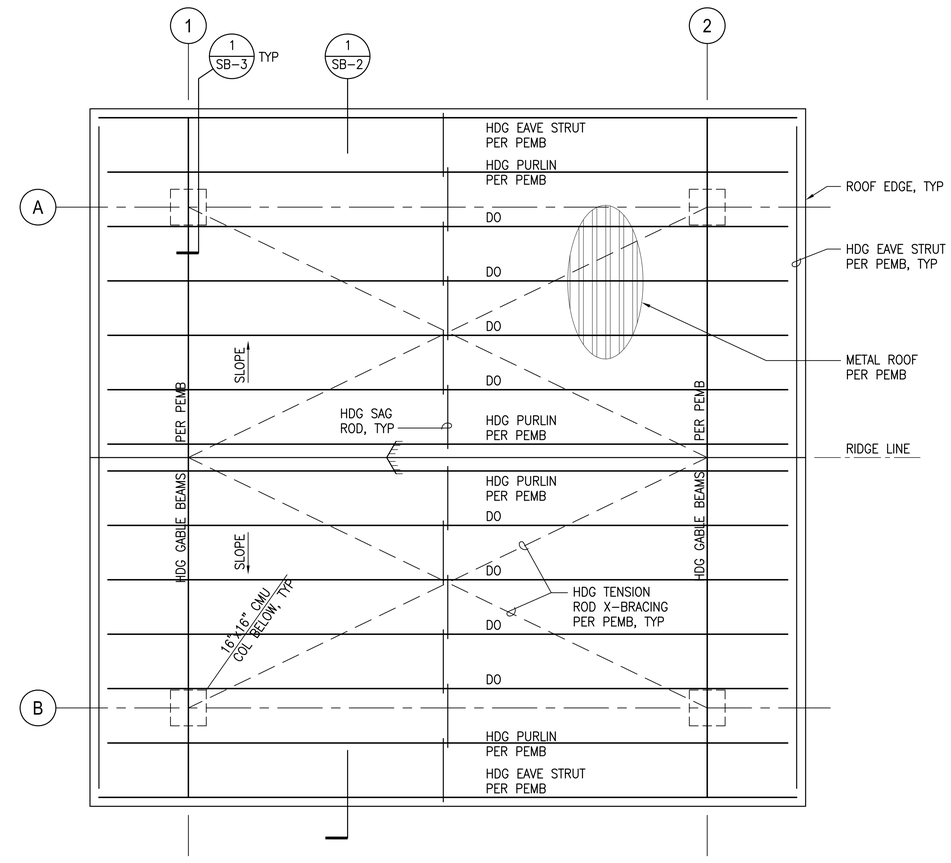

B BLOWER AND MCC BUILDING ROOF FRAMING PLAN

SCALE: 3/8" = 1'-0"

GRAPHIC SCALE

0 6" 1' 2' 4' 8'

3/8"=1'-0"

AustinTsutsumi & ASSOCIATES, INC.
CIVIL ENGINEERS I SURVEYORS
HONOLULU I WAILUKU I HILO, HAWAII

501 SUMNER STREET, SUITE 521
HONOLULU, HAWAII 96817

PHONE: 808-533-3646
FAX: 808-526-1267

STATE OF HAWAII
DEPARTMENT OF HAWAIIAN HOME LANDS

PULEHUNUI REGIONAL INFRASTRUCTURE

AUSTIN, TSUTSUMI & ASSOC., INC.
ENGINEERS, SURVEYORS • HONOLULU, HAWAII

GEORGE O. GUTIERREZ JR. LICENSED PROFESSIONAL ENGINEER NO. 12107-S HAWAII, U.S.A.

This work was prepared by me or under my supervision and construction of this project will be under my observation. (Observation of construction as defined in Chapter 16-115 Subchapter 1 Definitions of the Hawaii Administrative Rules "Professional Engineers, Architects, Surveyors, and Landscape Architects.")

SIGNATURE — APRIL 30, 2020 EXP. DATE OF THE LICENSE

0 1 2
LINE IS 2 INCHES AT FULL SIZE
(If NOT 2-inches : Scale Accordingly)

REVISION	DATE	BRIEF	BY

Project No:	16-576
Scale:	AS NOTED
Date:	1/22/20
Designed By:	CK
Drawn By:	LL
Checked By:	GG

BLOWER AND MCC BUILDING FOUNDATION AND ROOF FRAMING PLANS

DWG. NO.

SB-1

SHEET 144 OF 201

FILE	POCKET	FOLDER	NO.

JOB NO. O-11-056.004
FN: F:\19JOB.DWG\19060 DHHL PULEHUNUI\DWGS_19060\STRUCT_19060\DWGS_19060\DRAWINGS.DWG

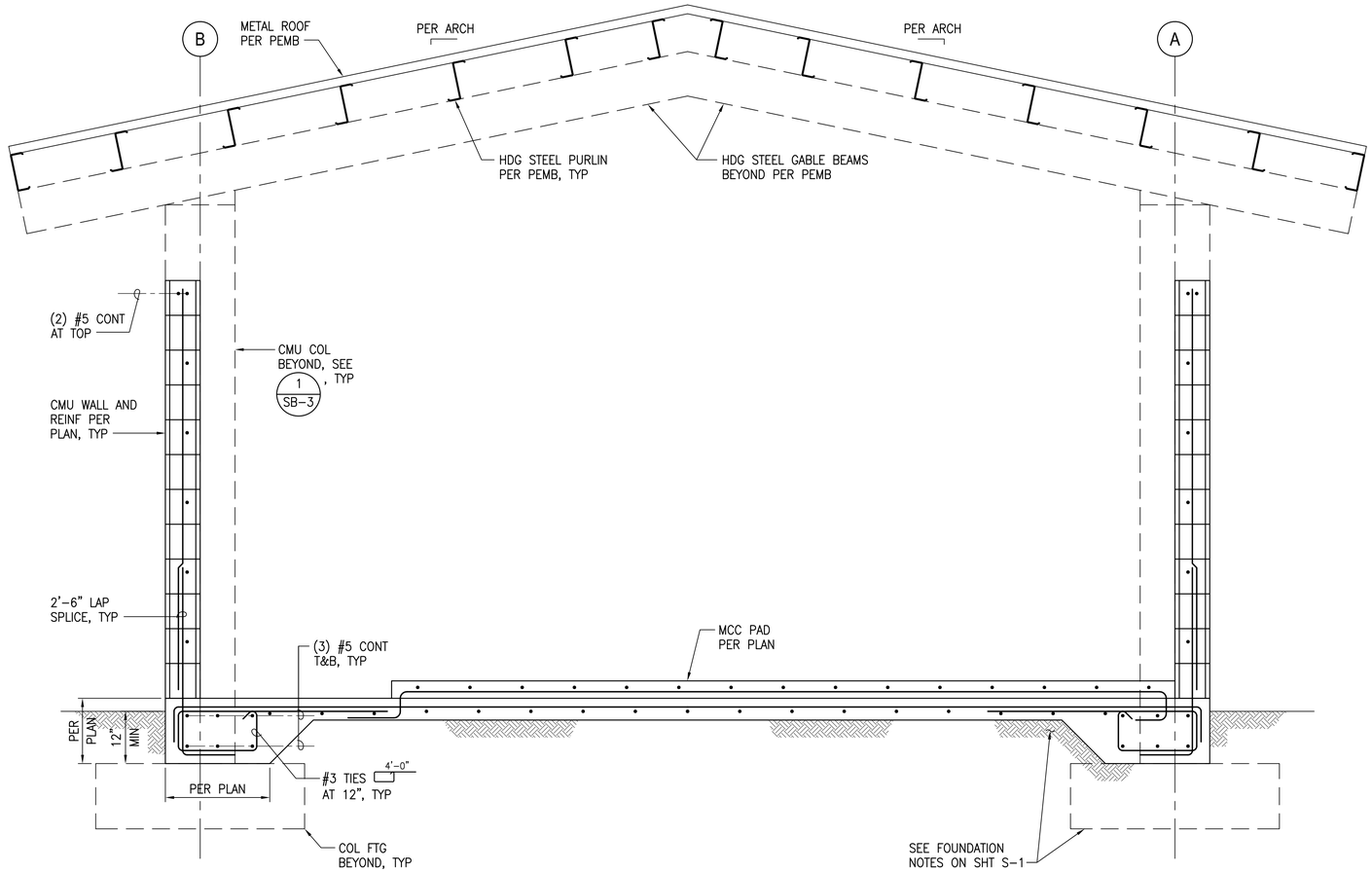

1 BLOWER AND MCC BUILDING SECTION

SCALE: 3/4" = 1'-0"

GRAPHIC SCALE

0 6" 1' 2' 4'

3/4"=1'-0"

AustinTsutsumi
& ASSOCIATES, INC.
CIVIL ENGINEERS I SURVEYORS
HONOLULU I WAILUKU I HILO, HAWAII

501 SUMNER STREET, SUITE 521
HONOLULU, HAWAII 96817

PHONE: 808-533-3646
FAX: 808-526-1267

STATE OF HAWAII
DEPARTMENT OF
HAWAIIAN HOME LANDS

PULEHUNUI
REGIONAL
INFRASTRUCTURE

AUSTIN, TSUTSUMI & ASSOC., INC.
ENGINEERS, SUVEYORS • HONOLULU, HAWAII

GEORGE O. GUTIERREZ JR.
LICENSED PROFESSIONAL ENGINEER
NO. 12107-S
HAWAII, U.S.A.

This work was prepared by me or under my supervision and construction of this project will be under my observation. (Observation of construction as defined in Chapter 16-115 Subchapter 1 Definitions of the Hawaii Administrative Rules "Professional Engineers, Architects, Surveyors, and Landscape Architects.")

SIGNATURE — APRIL 30, 2020 EXP. DATE OF THE LICENSE

0 1 2
LINE IS 2 INCHES AT FULL SIZE
(If NOT 2-inches : Scale Accordingly)

REVISION	DATE	BRIEF	BY

Project No:	16-576
Scale:	AS NOTED
Date:	1/22/20
Designed By:	CK
Drawn By:	LL
Checked By:	GG

BLOWER AND MCC
BUILDING SECTION

DWG. NO.

SB-2

SHEET 145 OF 201

FILE	POCKET	FOLDER	NO.

JOB NO. O-11-056.004
FN: F:\19JOB.DWG\19060 DHHL PULEHUNUI\DWGS_19060\STRUCT_19060\DWGS_19060\DRAWINGS.DWG

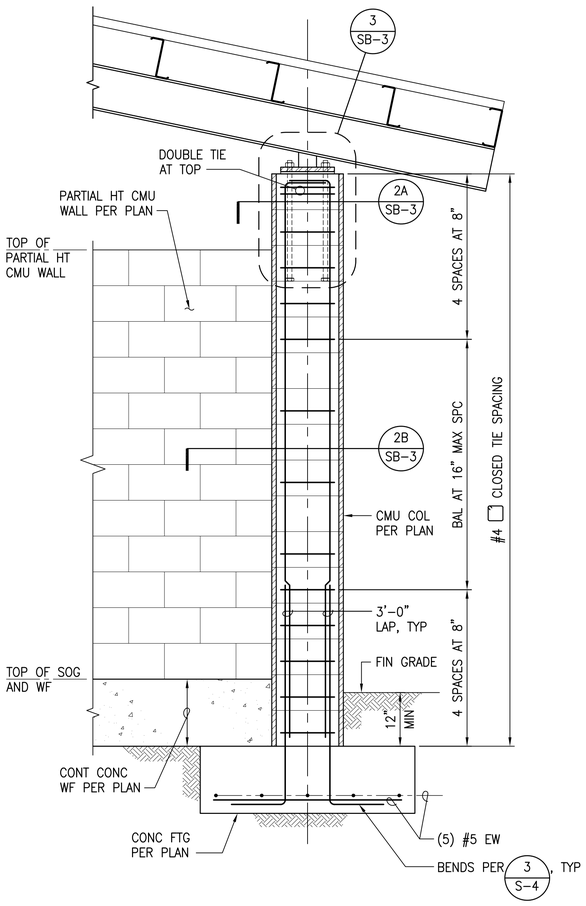

1 SECTION - CMU COLUMN
SCALE: 3/4" = 1'-0"

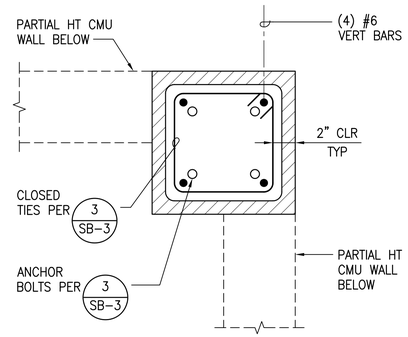

PLAN

2A SECTION - CMU COLUMN
SCALE: 1-1/2" = 1'-0"

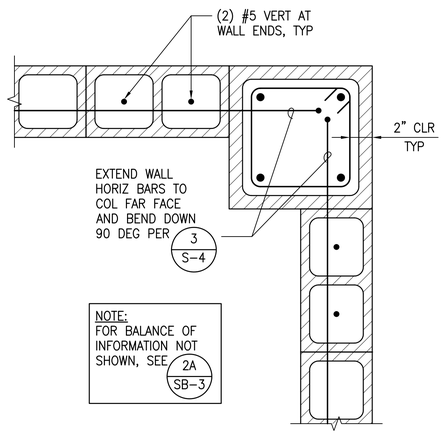

PLAN

2B SECTION - CMU COLUMN
SCALE: 1-1/2" = 1'-0"

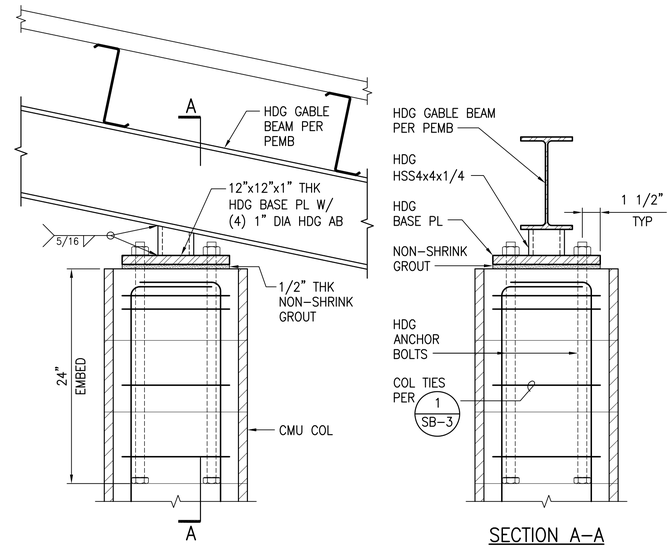

SECTION A-A

3 DETAIL
SCALE: 1-1/2" = 1'-0"

GRAPHIC SCALE

0 6" 1' 2' 4'
3/4"=1'-0"

0 3" 6" 1' 2'
1-1/2"=1'-0"

AustinTsutsumi
& ASSOCIATES, INC.
CIVIL ENGINEERS I SURVEYORS
HONOLULU I WAILUKU I HILO, HAWAII

501 SUMNER STREET, SUITE 521
HONOLULU, HAWAII 96817

PHONE: 808-533-3646
FAX: 808-526-1267

STATE OF HAWAII
DEPARTMENT OF
HAWAIIAN HOME LANDS

PULEHUNUI
REGIONAL
INFRASTRUCTURE

AUSTIN, TSUTSUMI & ASSOC., INC.
ENGINEERS, SUVEYORS • HONOLULU, HAWAII

GEORGE O. GUTIERREZ JR.
LICENSED PROFESSIONAL ENGINEER
NO. 12107-S
HAWAII, U.S.A.

This work was prepared by me or under my supervision and construction of this project will be under my observation. (Observation of construction as defined in Chapter 16-115 Subchapter 1 Definitions of the Hawaii Administrative Rules "Professional Engineers, Architects, Surveyors, and Landscape Architects.")

SIGNATURE — APRIL 30, 2020 EXP. DATE OF THE LICENSE

0 1 2
LINE IS 2 INCHES AT FULL SIZE
(If NOT 2-inches : Scale Accordingly)

REVISION	DATE	BRIEF	BY

Project No:	16-576
Scale:	AS NOTED
Date:	1/22/20
Designed By:	CK
Drawn By:	LL
Checked By:	GG

BLOWER AND MCC
BUILDING SECTIONS
AND DETAILS

DWG. NO.
SB-3

SHEET 146 OF 201

FILE	POCKET	FOLDER	NO.

JOB NO. O-11-056.004
FN: F:\19JOB\DWG\19060 DHHL PULEHUNUI\DWGS_19060\STRUCT_19060\DWGS_19060\DRAWINGS.DWG

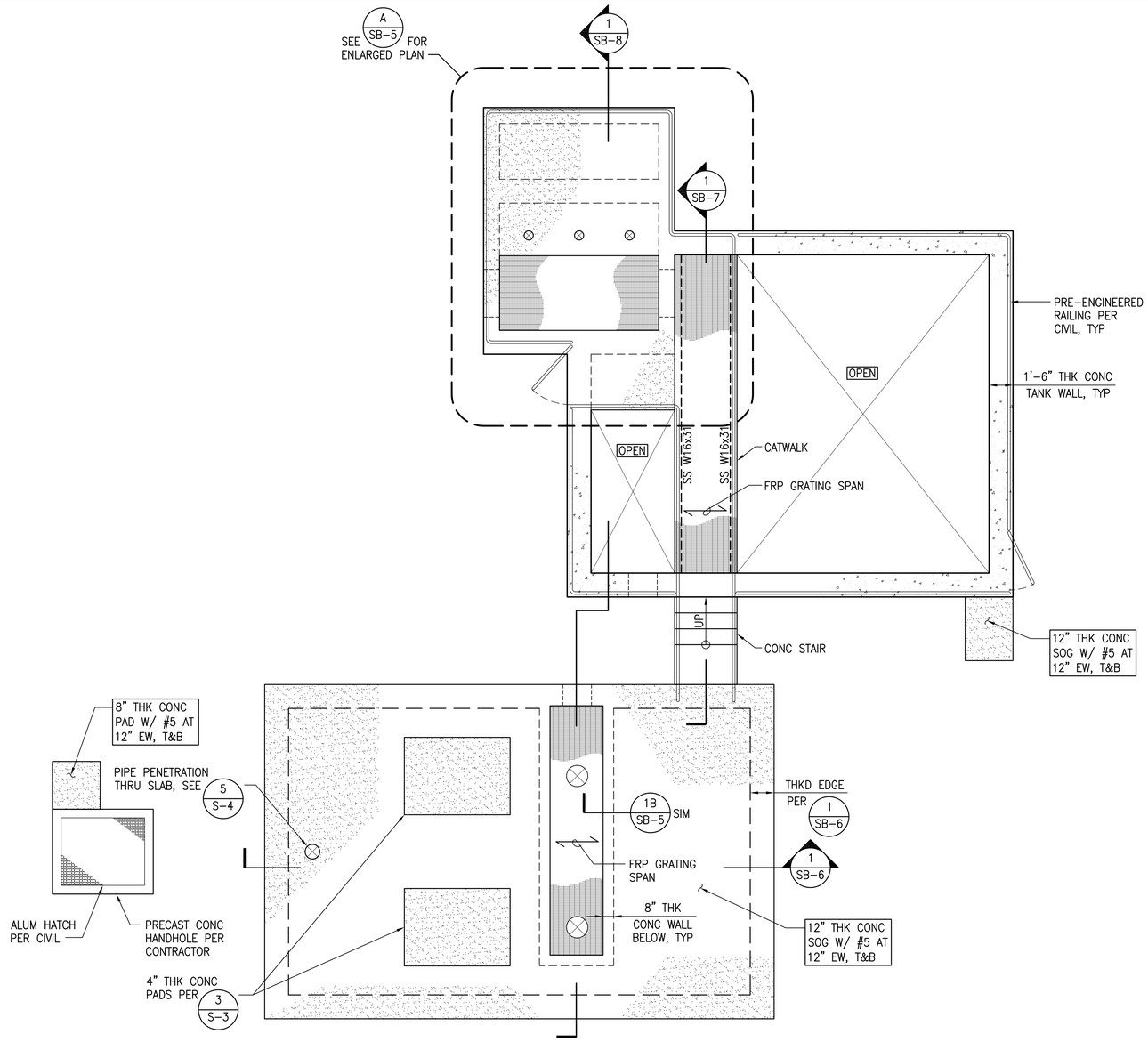

A EQUALIZATION TANK & HEADWORKS FOUNDATION PLAN

SCALE: 1/4" = 1'-0"

NORTH

NOTES:

1. SEE GENERAL NOTES ON SHEET S-1 TO S-2 AND TYPICAL DETAILS ON SHEETS S-3 TO S-5 FOR ADDITIONAL INFORMATION.
2. SEE MECHANICAL AND CIVIL DRAWINGS FOR TANK DIMENSIONS AND OTHER DIMENSIONS NOT INDICATED ON STRUCTURAL DRAWINGS.

GRAPHIC SCALE

0 1' 2' 4' 8' 12'

1/4"=1'-0"

AustinTsutsumi
& ASSOCIATES, INC.
CIVIL ENGINEERS I SURVEYORS
HONOLULU I WAILUKU I HILO, HAWAII

501 SUMNER STREET, SUITE 521
HONOLULU, HAWAII 96817

PHONE: 808-533-3646
FAX: 808-526-1267

STATE OF HAWAII
DEPARTMENT OF
HAWAIIAN HOME LANDS

PULEHUNUI
REGIONAL
INFRASTRUCTURE

AUSTIN, TSUTSUMI & ASSOC., INC.
ENGINEERS, SUVEYORS • HONOLULU, HAWAII

GEORGE O. GUTIERREZ JR.
LICENSED PROFESSIONAL ENGINEER
NO. 12107-S
HAWAII, U.S.A.

This work was prepared by me or under my supervision and construction of this project will be under my observation. (Observation of construction as defined in Chapter 16-115 Subchapter 1 Definitions of the Hawaii Administrative Rules "Professional Engineers, Architects, Surveyors, and Landscape Architects.")

SIGNATURE — APRIL 30, 2020 EXP. DATE OF THE LICENSE

0 1 2
LINE IS 2 INCHES AT FULL SIZE
(If NOT 2-inches : Scale Accordingly)

REVISION	DATE	BRIEF	BY

Project No:	16-576
Scale:	AS NOTED
Date:	1/22/20
Designed By:	CK
Drawn By:	LL
Checked By:	GG

EQUALIZATION TANK & HEADWORKS FOUNDATION PLAN

DWG. NO.

SB-4

SHEET 147 OF 201

FILE	POCKET	FOLDER	NO.

JOB NO. O-11-056.004
FN: F:\19JOB.DWG\19060_DHHL_PULEHUNUI\DWGS_19060\STRUCT_19060\DWGS_19060\DRAWINGS.DWG

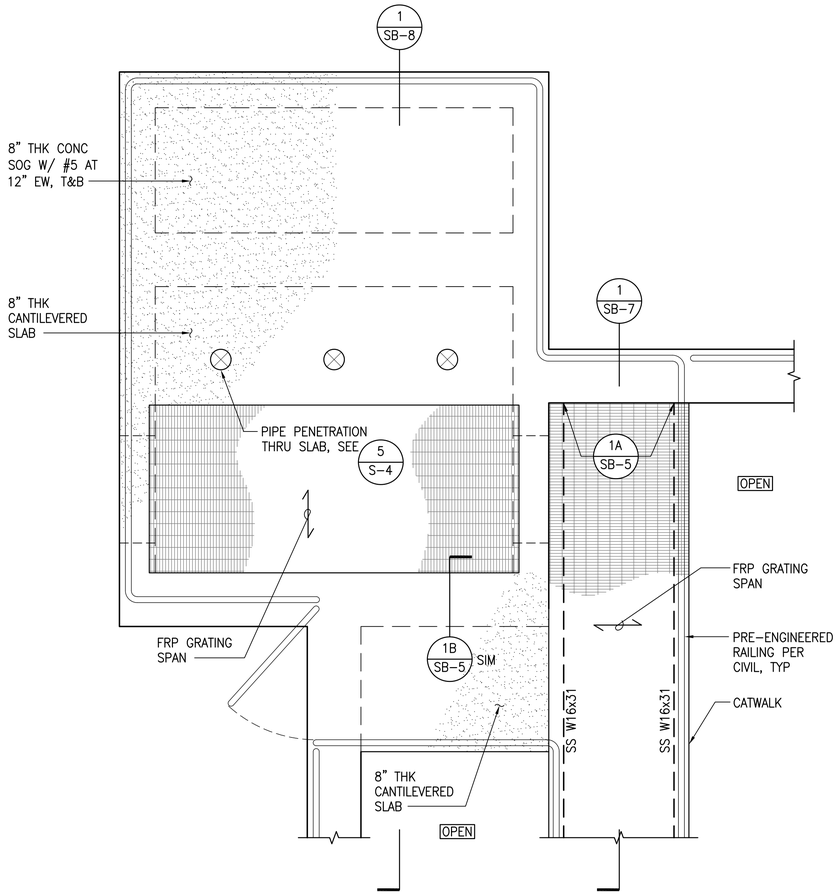

A EQUALIZATION TANK ENLARGED PLAN
SCALE: 1/2" = 1'-0"

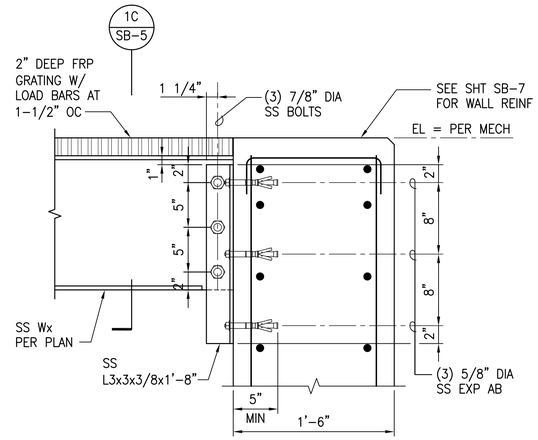

1A Wx SS CONN TO CONC WALL
SCALE: 1-1/2" = 1'-0"

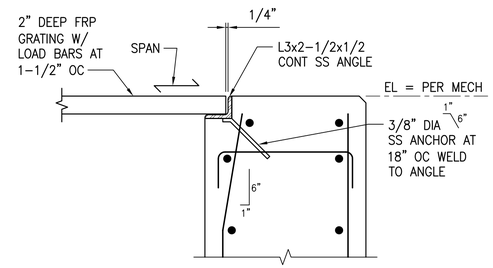

1B TYP FRP GRATING SEAT ANGLE
SCALE: 1-1/2" = 1'-0"

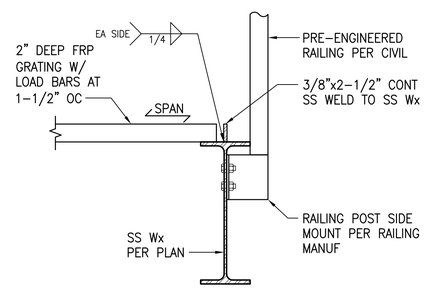

1C SECTION
SCALE: 1-1/2" = 1'-0"

1 DETAIL - GRATING SUPPORT BEAM AND TYPICAL SEAT ANGLE
SCALE: 1-1/2" = 1'-0"

GRAPHIC SCALE

0 6" 1' 2' 4' 6'
1/2"=1'-0"

0 3" 6" 1' 2'
1-1/2"=1'-0"

AustinTsutsumi
& ASSOCIATES, INC.
CIVIL ENGINEERS I SURVEYORS
HONOLULU I WAILUKU I HILO, HAWAII

501 SUMNER STREET, SUITE 521
HONOLULU, HAWAII 96817

PHONE: 808-533-3646
FAX: 808-526-1267

STATE OF HAWAII
DEPARTMENT OF
HAWAIIAN HOME LANDS

PULEHUNUI
REGIONAL
INFRASTRUCTURE

AUSTIN, TSUTSUMI & ASSOC., INC.
ENGINEERS, SURVEYORS • HONOLULU, HAWAII

GEORGE O. GUTIERREZ JR.
LICENSED PROFESSIONAL ENGINEER
NO. 12107-S
HAWAII, U.S.A.

This work was prepared by me or under my supervision and construction of this project will be under my observation. (Observation of construction as defined in Chapter 16-115 Subchapter 1 Definitions of the Hawaii Administrative Rules "Professional Engineers, Architects, Surveyors, and Landscape Architects.")

SIGNATURE — APRIL 30, 2020 EXP. DATE OF THE LICENSE

0 1 2
LINE IS 2 INCHES AT FULL SIZE
(If NOT 2-inches : Scale Accordingly)

REVISION	DATE	BRIEF	BY

Project No:	16-576
Scale:	AS NOTED
Date:	1/22/20
Designed By:	CK
Drawn By:	LL
Checked By:	GG

EQUALIZATION TANK
ENLARGED PLAN
AND FRP GRATING
DETAILS

DWG. NO.
SB-5

SHEET 148 OF 201

FILE	POCKET	FOLDER	NO.

JOB NO. O-11-056.004
FN: F:\19JOB.DWG\19060 DHHL PULEHUNUI\DWGS_19060\STRUCT_19060\DWGS_19060\DRAWINGS.DWG

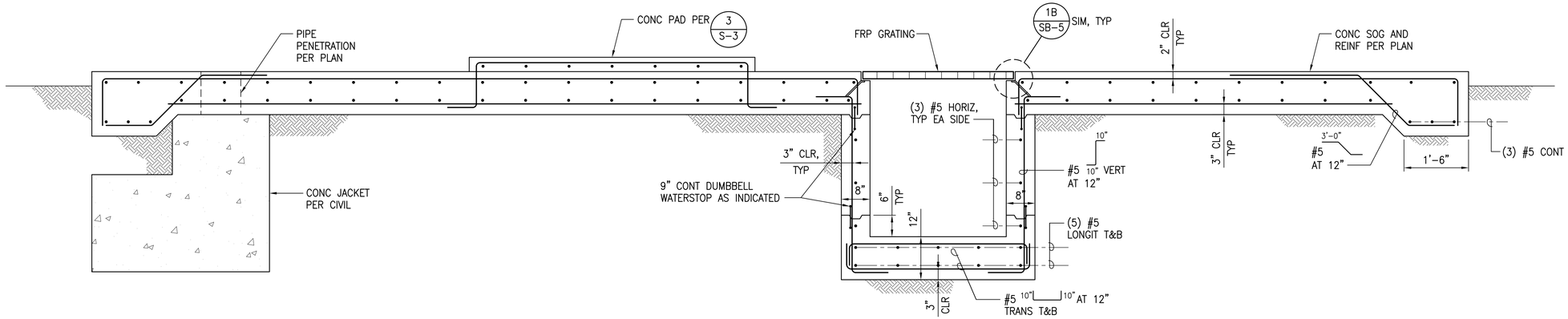

1 HEADWORKS SECTION

SCALE: 3/4" = 1'-0"

GRAPHIC SCALE

0 6" 1' 2' 4'

3/4"=1'-0"

AustinTsutsumi & ASSOCIATES, INC.
CIVIL ENGINEERS I SURVEYORS
HONOLULU I WAILUKU I HILO, HAWAII

501 SUMNER STREET, SUITE 521
HONOLULU, HAWAII 96817

PHONE: 808-533-3646
FAX: 808-526-1267

STATE OF HAWAII
DEPARTMENT OF
HAWAIIAN HOME LANDS

PULEHUNUI
REGIONAL
INFRASTRUCTURE

AUSTIN, TSUTSUMI & ASSOC., INC.
ENGINEERS, SUVEYORS • HONOLULU, HAWAII

GEORGE O. GUTIERREZ JR.
LICENSED PROFESSIONAL ENGINEER
NO. 12107-S
HAWAII, U.S.A.

This work was prepared by me or under my supervision and construction of this project will be under my observation. (Observation of construction as defined in Chapter 16-115 Subchapter 1 Definitions of the Hawaii Administrative Rules "Professional Engineers, Architects, Surveyors, and Landscape Architects.")

SIGNATURE — APRIL 30, 2020 EXP. DATE OF THE LICENSE

0 1 2
LINE IS 2 INCHES AT FULL SIZE
(If NOT 2-inches : Scale Accordingly)

REVISION	DATE	BRIEF	BY

Project No:	16-576
Scale:	AS NOTED
Date:	1/22/20
Designed By:	CK
Drawn By:	LL
Checked By:	GG

HEADWORKS SECTION

DWG. NO.

SB-6

SHEET 149 OF 201

FILE	POCKET	FOLDER	NO.

JOB NO. 0-11-056.004
F/N: F:\19JOB.DWG\19060 DHHL PULEHUNUI\DWGS_19060\STRUCT_19060\DWGS_19060\DRAWINGS.DWG

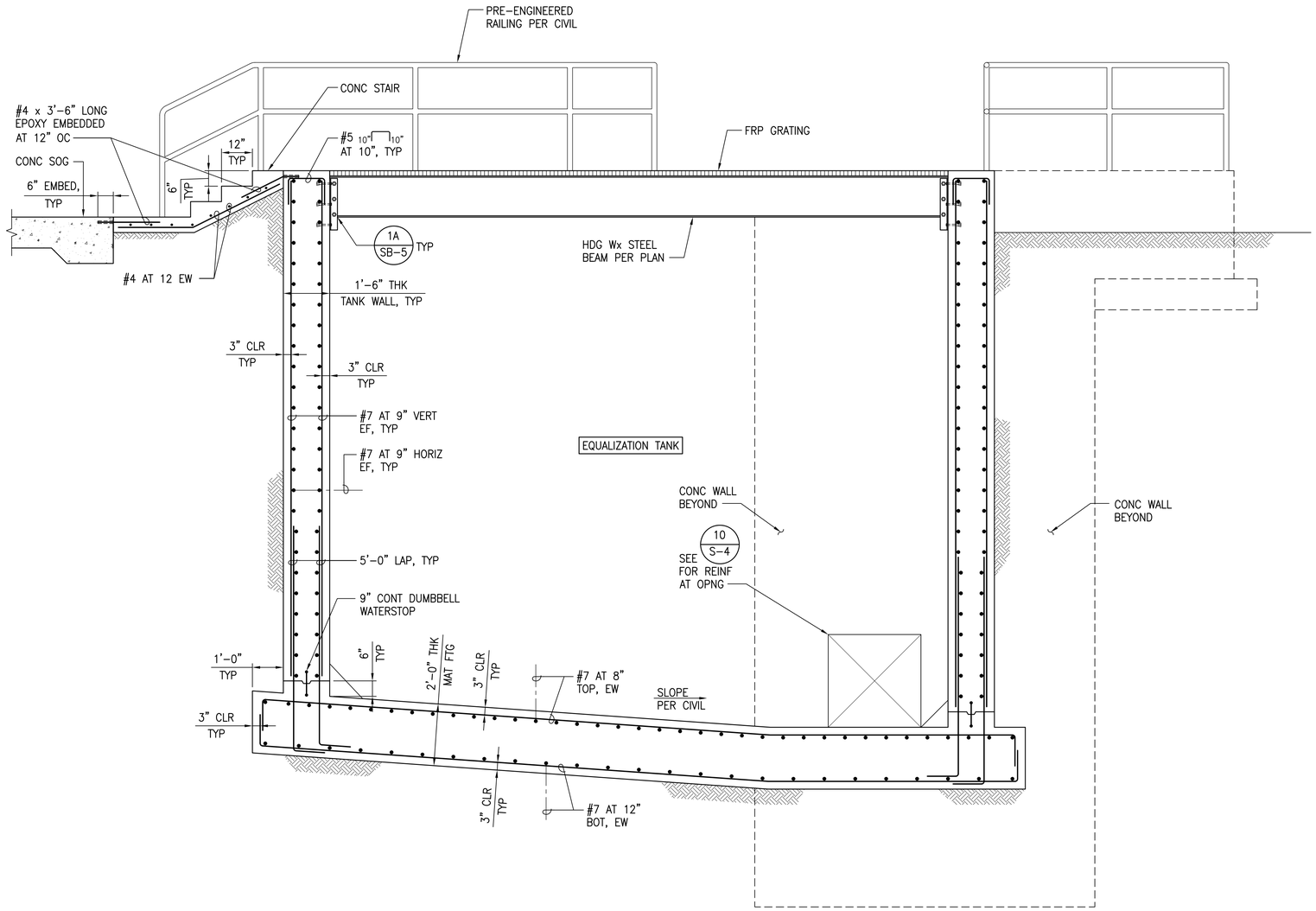

1 EQUALIZATION TANK SECTION

SCALE: 1/2" = 1'-0"

GRAPHIC SCALE

0 6" 1' 2' 4' 6'

1/2"=1'-0"

AustinTsutsumi & ASSOCIATES, INC.
CIVIL ENGINEERS I SURVEYORS
HONOLULU I WAILUKU I HILO, HAWAII

501 SUMNER STREET, SUITE 521
HONOLULU, HAWAII 96817

PHONE: 808-533-3646
FAX: 808-526-1267

STATE OF HAWAII
DEPARTMENT OF
HAWAIIAN HOME LANDS

PULEHUNUI
REGIONAL
INFRASTRUCTURE

AUSTIN, TSUTSUMI & ASSOC., INC.
ENGINEERS, SUVEYORS • HONOLULU, HAWAII

GEORGE O. GUTIERREZ JR.
LICENSED PROFESSIONAL ENGINEER
NO. 12107-S
HAWAII, U.S.A.

This work was prepared by me or under my supervision and construction of this project will be under my observation. (Observation of construction as defined in Chapter 16-115 Subchapter 1 Definitions of the Hawaii Administrative Rules "Professional Engineers, Architects, Surveyors, and Landscape Architects.")

SIGNATURE — APRIL 30, 2020 EXP. DATE OF THE LICENSE

0 1 2
LINE IS 2 INCHES AT FULL SIZE
(If NOT 2-inches : Scale Accordingly)

REVISION	DATE	BRIEF	BY

Project No:	16-576
Scale:	AS NOTED
Date:	1/22/20
Designed By:	CK
Drawn By:	LL
Checked By:	GG

EQUALIZATION TANK SECTION

DWG. NO.

SB-7

SHEET 150 OF 201

FILE	POCKET	FOLDER	NO.

JOB NO. 0-11-056.004
F/N: F:\19JOB.DWG\19060 DHHL PULEHUNUI\DWGS_19060\STRUCT_19060\DWGS_19060\DRAWINGS.DWG

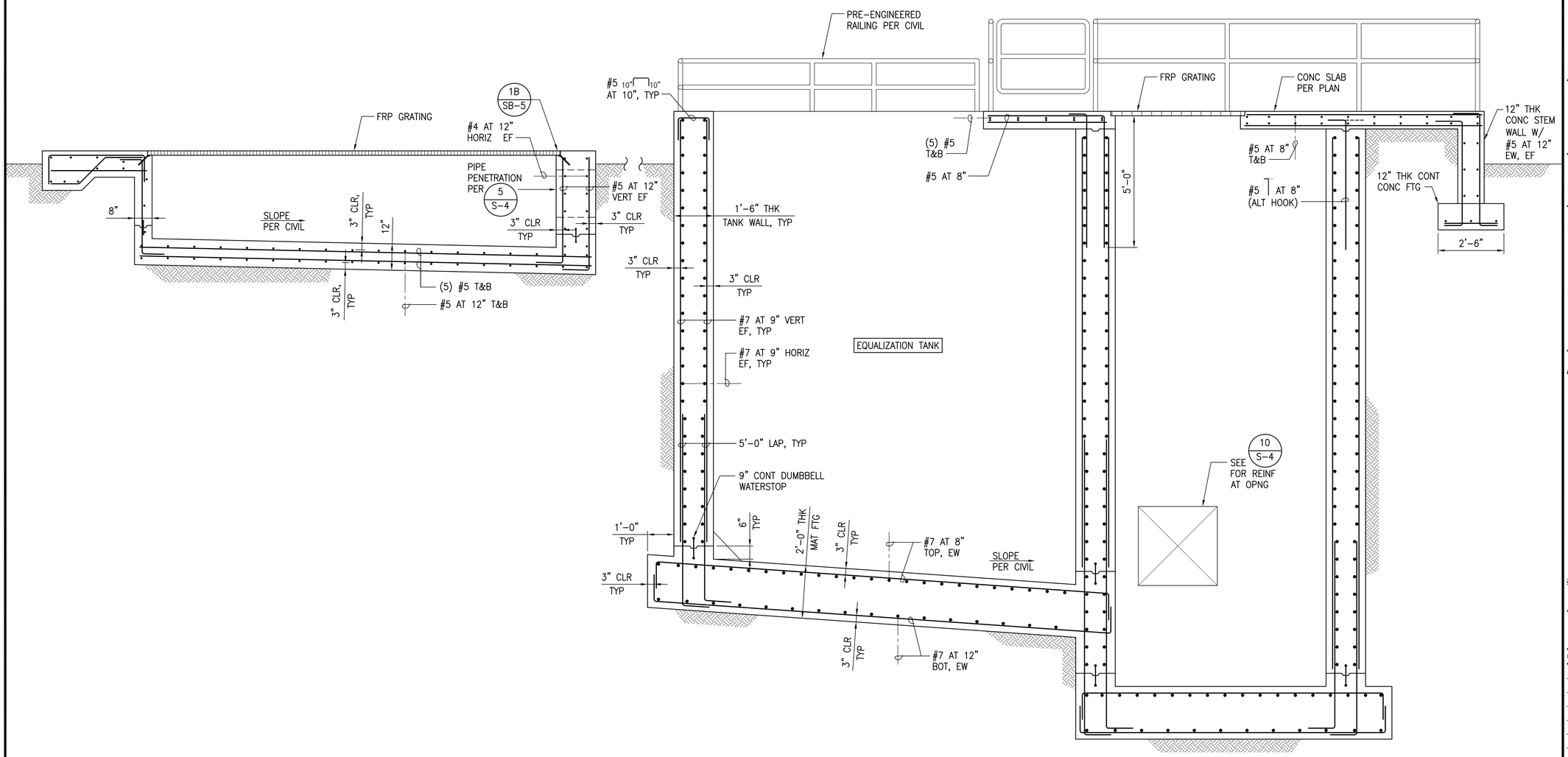

1 HEADWORKS AND EQUALIZATION TANK SECTION

SCALE: 1/2" = 1'-0"

GRAPHIC SCALE

0 6" 1' 2' 4' 6'

1/2"=1'-0"

AustinTsutsumi & ASSOCIATES, INC.
CIVIL ENGINEERS I SURVEYORS
HONOLULU I WAILUKU I HILO, HAWAII

501 SUMNER STREET, SUITE 521
HONOLULU, HAWAII 96817

PHONE: 808-533-3646
FAX: 808-526-1267

STATE OF HAWAII
DEPARTMENT OF
HAWAIIAN HOME LANDS

PULEHUNUI
REGIONAL
INFRASTRUCTURE

AUSTIN, TSUTSUMI & ASSOC., INC.
ENGINEERS, SUVEYORS • HONOLULU, HAWAII

GEORGE O. GUTIERREZ JR.
LICENSED PROFESSIONAL ENGINEER
NO. 12107-S
HAWAII, U.S.A.

This work was prepared by me or under my supervision and construction of this project will be under my observation. (Observation of construction as defined in Chapter 16-115 Subchapter 1 Definitions of the Hawaii Administrative Rules "Professional Engineers, Architects, Surveyors, and Landscape Architects.")

SIGNATURE — APRIL 30, 2020 EXP. DATE OF THE LICENSE

0 1 2
LINE IS 2 INCHES AT FULL SIZE
(If NOT 2-inches : Scale Accordingly)

REVISION	DATE	BRIEF	BY

Project No:	16-576
Scale:	AS NOTED
Date:	1/22/20
Designed By:	CK
Drawn By:	LL
Checked By:	GG

HEADWORKS AND EQUALIZATION TANK SECTION

DWG. NO.

SB-8

SHEET 151 OF 201

FILE	POCKET	FOLDER	NO.

JOB NO. O-11-056.004
FN: F:\19JOB.DWG\19060 DHHL PULEHUNUI\DWGS_19060\STRUCT_19060\DWGS_19060\DRAWINGS.DWG

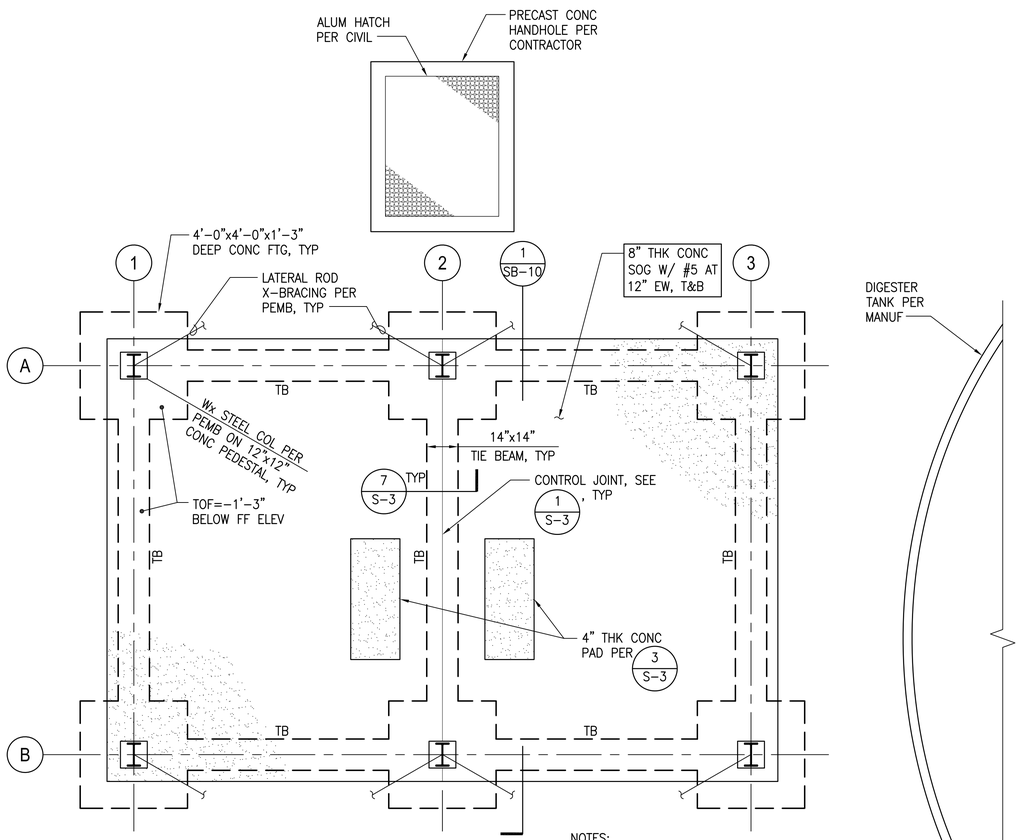

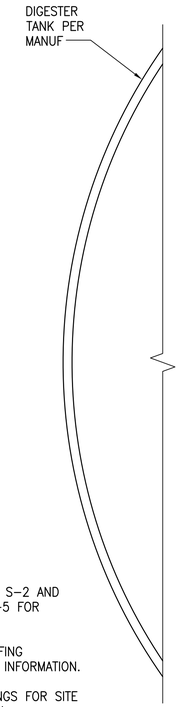

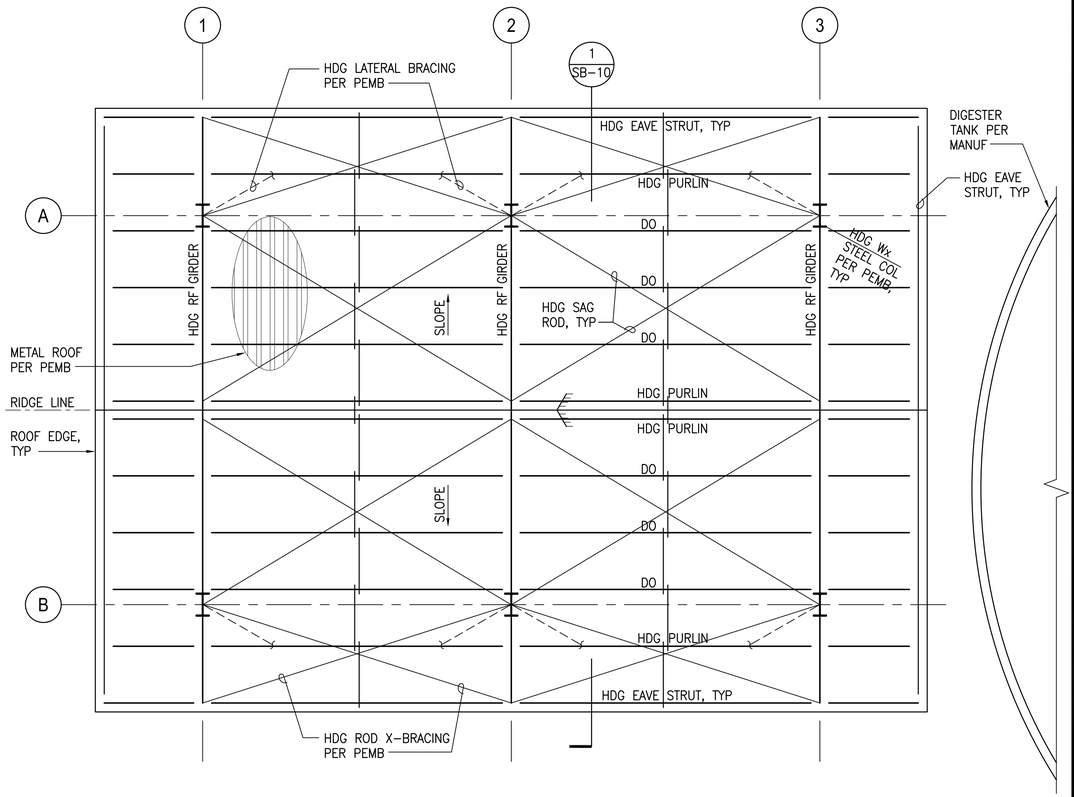

NOTES:

1. SEE GENERAL NOTES ON SHEET S-1 TO S-2 AND TYPICAL DETAILS ON SHEETS S-3 TO S-5 FOR ADDITIONAL INFORMATION.
2. SEE ARCHITECTURAL DRAWINGS FOR ROOFING GUTTERS, DOWNSPOUTS, AND ADDITIONAL INFORMATION.
3. REFER TO CIVIL AND MECHANICAL DRAWINGS FOR SITE PLAN, LOCATION OF STRUCTURES AND ALL INFORMATION AND DIMENSIONS NOT SHOWN ON STRUCTURAL DRAWINGS.
4. SEE 4 / S-3 FOR REQUIREMENTS AT EXCAVATIONS PARALLEL TO BUILDING FOUNDATION.

A UV DISINFECTION FOUNDATION PLAN
SCALE: 3/8" = 1'-0"

NORTH

B UV DISINFECTION ROOF FRAMING PLAN
SCALE: 3/8" = 1'-0"

NORTH

GRAPHIC SCALE

0 6" 1' 2' 4' 8'

3/8"=1'-0"

AustinTsutsumi & ASSOCIATES, INC.
CIVIL ENGINEERS I SURVEYORS
HONOLULU I WAILUKU I HILO, HAWAII

501 SUMNER STREET, SUITE 521
HONOLULU, HAWAII 96817

PHONE: 808-533-3646
FAX: 808-526-1267

STATE OF HAWAII
DEPARTMENT OF
HAWAIIAN HOME LANDS

PULEHUNUI
REGIONAL
INFRASTRUCTURE

AUSTIN, TSUTSUMI & ASSOC., INC.
ENGINEERS, SURVEYORS • HONOLULU, HAWAII

GEORGE O. GUTIERREZ JR.
LICENSED PROFESSIONAL ENGINEER
NO. 12107-S
HAWAII, U.S.A.

This work was prepared by me or under my supervision and construction of this project will be under my observation. (Observation of construction as defined in Chapter 16-115 Subchapter 1 Definitions of the Hawaii Administrative Rules "Professional Engineers, Architects, Surveyors, and Landscape Architects.")

SIGNATURE — APRIL 30, 2020 — EXP. DATE OF THE LICENSE

0 1 2
LINE IS 2 INCHES AT FULL SIZE
(If NOT 2-inches : Scale Accordingly)

REVISION	DATE	BRIEF	BY

Project No:	16-576
Scale:	AS NOTED
Date:	1/22/20
Designed By:	CK
Drawn By:	LL
Checked By:	GG

UV DISINFECTION FOUNDATION AND ROOF FRAMING PLANS

DWG. NO.
SB-9

SHEET 152 OF 201

FILE	POCKET	FOLDER	NO.

JOB NO. 0-11-056.004
FN: F:\19JOB.DWG\19060 DHHL PULEHUNUI\DWGS_19060\STRUCT_19060\DWGS_19060\DRAWINGS.DWG

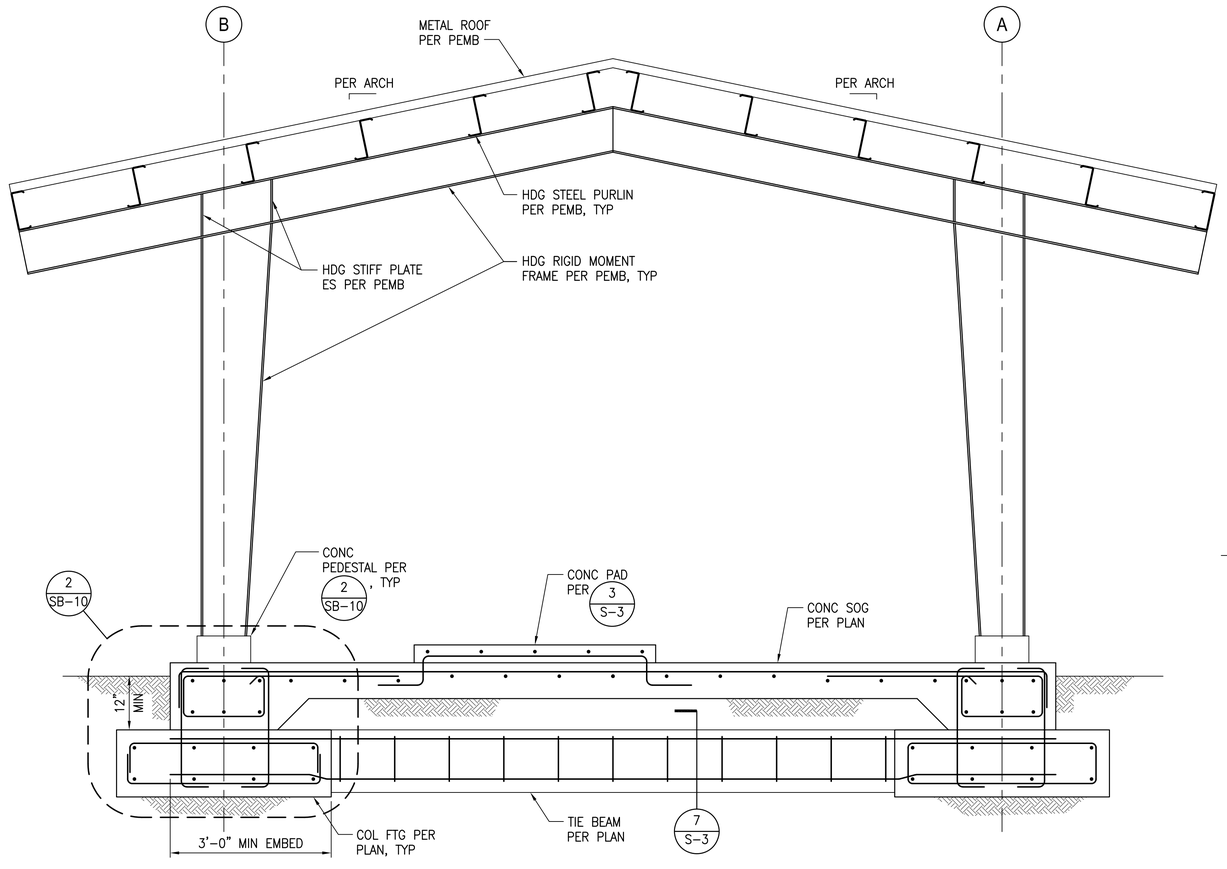

1 UV DISINFECTION SECTION

SCALE: 3/4" = 1'-0"

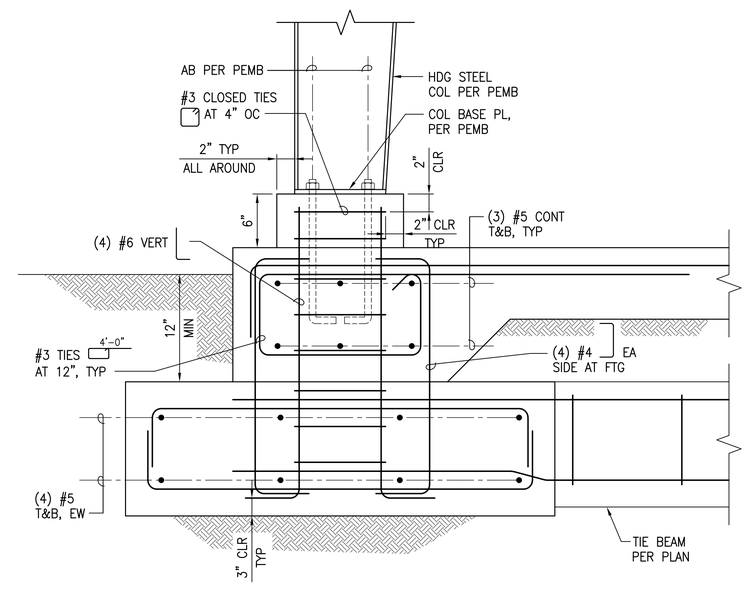

2 DETAIL - SECTION

SCALE: 1-1/2" = 1'-0"

GRAPHIC SCALE

0 6" 1' 2' 4'

3/4"=1'-0"

0 3" 6" 1' 2'

1-1/2"=1'-0"

AustinTsutsumi
& ASSOCIATES, INC.
CIVIL ENGINEERS I SURVEYORS
HONOLULU I WAILUKU I HILO, HAWAII

501 SUMNER STREET, SUITE 521
HONOLULU, HAWAII 96817

PHONE: 808-533-3646
FAX: 808-526-1267

STATE OF HAWAII
DEPARTMENT OF
HAWAIIAN HOME LANDS

PULEHUNUI
REGIONAL
INFRASTRUCTURE

AUSTIN, TSUTSUMI & ASSOC., INC.
ENGINEERS, SURVEYORS • HONOLULU, HAWAII

GEORGE O. GUTIERREZ JR.
LICENSED PROFESSIONAL ENGINEER
NO. 12107-S
HAWAII, U.S.A.

This work was prepared by me or under my supervision and construction of this project will be under my observation. (Observation of construction as defined in Chapter 16-115 Subchapter 1 Definitions of the Hawaii Administrative Rules "Professional Engineers, Architects, Surveyors, and Landscape Architects.")

SIGNATURE

APRIL 30, 2020
EXP. DATE OF THE LICENSE

0 1 2

LINE IS 2 INCHES AT FULL SIZE
(If NOT 2-inches : Scale Accordingly)

REVISION	DATE	BRIEF	BY

Project No:	16-576
Scale:	AS NOTED
Date:	1/22/20
Designed By:	CK
Drawn By:	LL
Checked By:	GG

UV DISINFECTION
SECTION

DWG. NO.

SB-10

SHEET 153 OF 201

FILE	POCKET	FOLDER	NO.

JOB NO. O-11-056.004
FN: F:\19.OB.DWG\19060 DHHL PULEHUNUI\DWGS_19060\STRUCT_19060\DWGS_19060\DRAWINGS.DWG

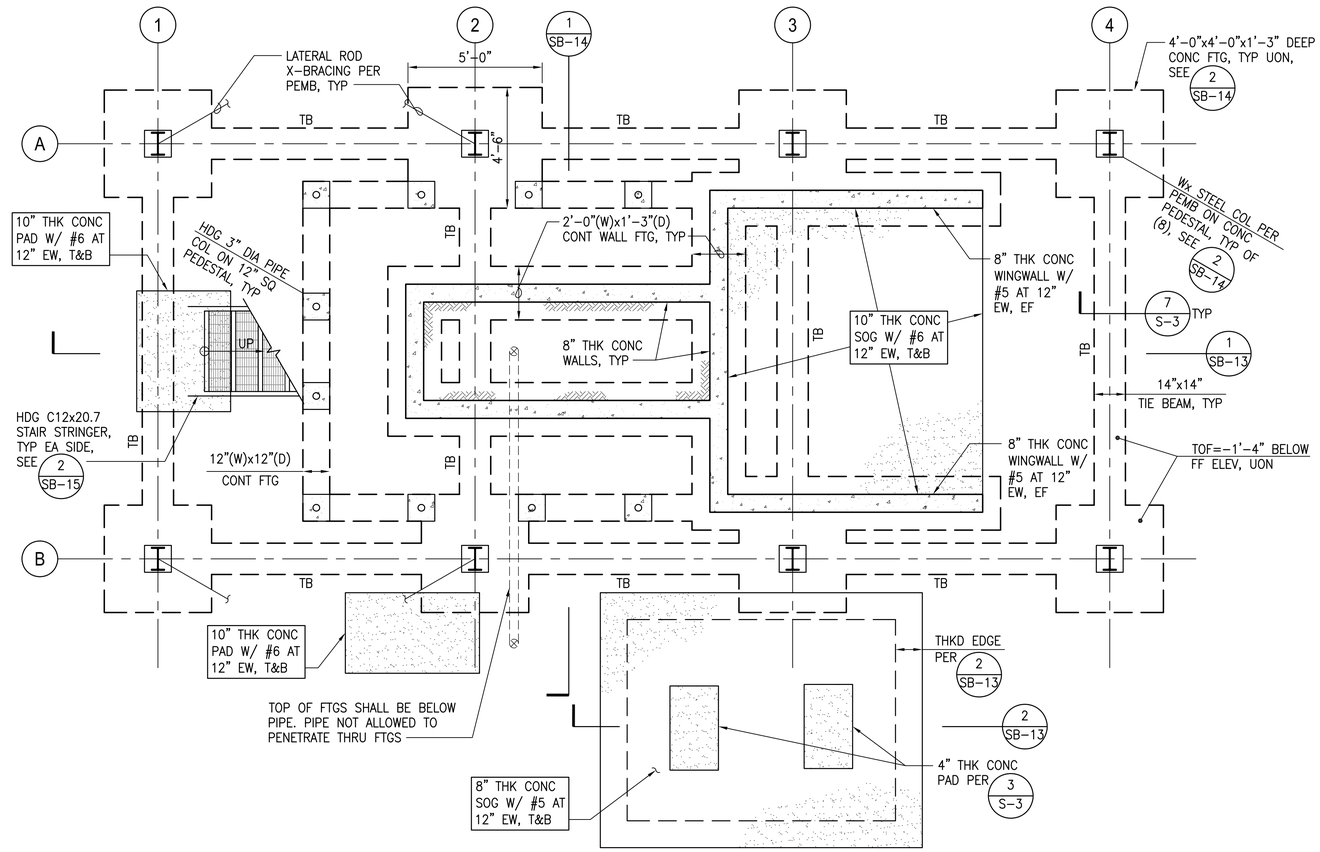

NOTES:

1. SEE GENERAL NOTES ON SHEET S-1 TO S-2 AND TYPICAL DETAILS ON SHEETS S-3 TO S-5 FOR ADDITIONAL INFORMATION.
2. REFER TO CIVIL AND MECHANICAL DRAWINGS FOR SITE PLAN, LOCATION OF STRUCTURES AND ALL INFORMATION AND DIMENSIONS NOT SHOWN ON STRUCTURAL DRAWINGS.
3. SEE (4 / S-3) FOR REQUIREMENTS AT EXCAVATIONS PARALLEL TO BUILDING FOUNDATION.

(A) SLUDGE DEWATERING FOUNDATION PLAN

SCALE: 3/8" = 1'-0"

NORTH

GRAPHIC SCALE

0 6" 1' 2' 4' 8'

3/8"=1'-0"

AustinTsutsumi
& ASSOCIATES, INC.
CIVIL ENGINEERS I SURVEYORS
HONOLULU I WAILUKU I HILO, HAWAII

501 SUMNER STREET, SUITE 521
HONOLULU, HAWAII 96817

PHONE: 808-533-3646
FAX: 808-526-1267

STATE OF HAWAII
DEPARTMENT OF
HAWAIIAN HOME LANDS

PULEHUNUI
REGIONAL
INFRASTRUCTURE

AUSTIN, TSUTSUMI & ASSOC., INC.
ENGINEERS, SUVEYORS • HONOLULU, HAWAII

GEORGE O. GUTIERREZ JR.
LICENSED PROFESSIONAL ENGINEER
NO. 12107-S
HAWAII, U.S.A.

This work was prepared by me or under my supervision and construction of this project will be under my observation. (Observation of construction as defined in Chapter 16-115 Subchapter 1 Definitions of the Hawaii Administrative Rules "Professional Engineers, Architects, Surveyors, and Landscape Architects.")

SIGNATURE — APRIL 30, 2020 EXP. DATE OF THE LICENSE

0 1 2
LINE IS 2 INCHES AT FULL SIZE
(If NOT 2-inches : Scale Accordingly)

REVISION	DATE	BRIEF	BY

Project No:	16-576
Scale:	AS NOTED
Date:	1/22/20
Designed By:	CK
Drawn By:	LL
Checked By:	GG

SLUDGE DEWATERING
FOUNDATION PLAN

DWG. NO.

SB-11

SHEET 154 OF 201

FILE	POCKET	FOLDER	NO.

JOB NO. O-11-056.004
FN: F:\19JOB.DWG\19060 DHHL PULEHUNUI\DWGS_19060\STRUCT_19060\DWGS_19060\DRAWINGS.DWG

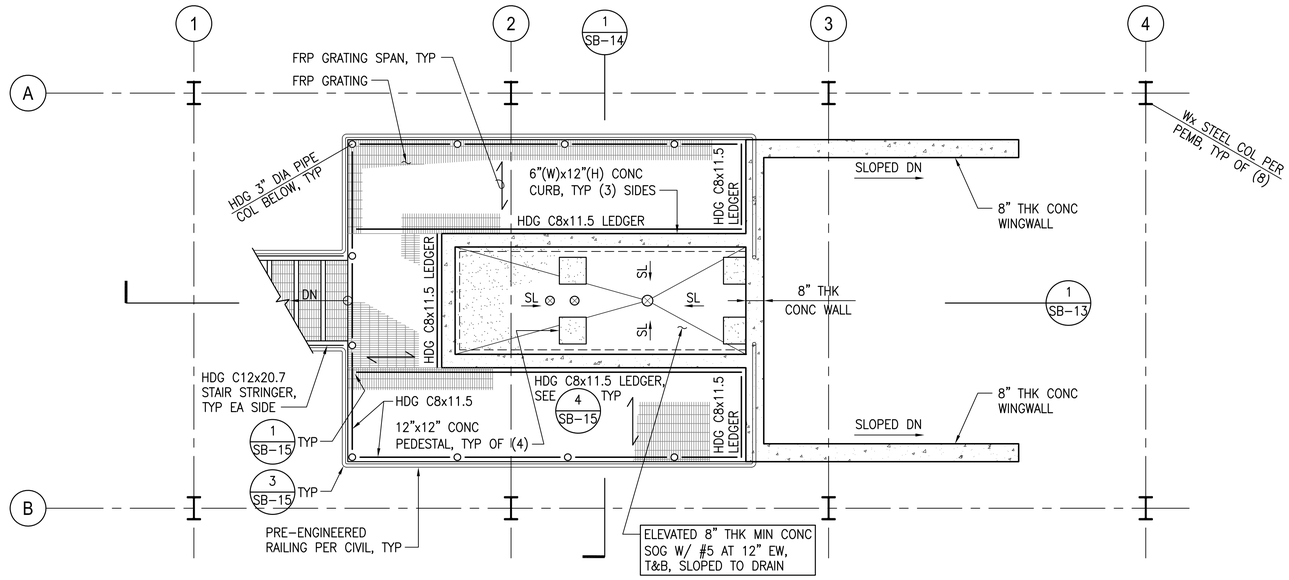

A SLUDGE DEWATERING PLATFORM FRAMING PLAN

SCALE: 3/8" = 1'-0"

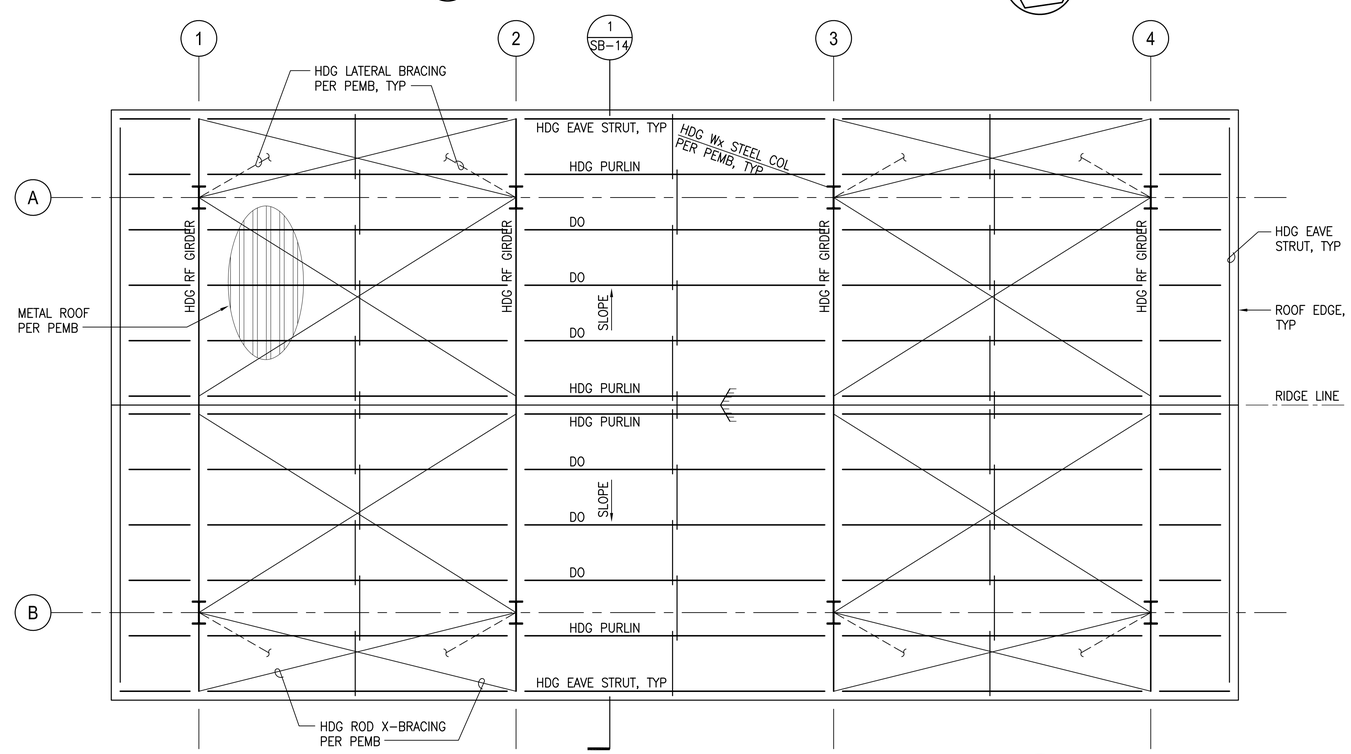

B SLUDGE DEWATERING ROOF FRAMING PLAN

SCALE: 3/8" = 1'-0"

NOTES:

1. SEE GENERAL NOTES ON SHEET S-1 TO S-2 AND TYPICAL DETAILS ON SHEETS S-3 TO S-5 FOR ADDITIONAL INFORMATION.
2. SEE ARCHITECTURAL DRAWINGS FOR ROOFING GUTTERS, DOWNSPOUTS, AND ADDITIONAL INFORMATION.
3. REFER TO CIVIL AND MECHANICAL DRAWINGS FOR SITE PLAN, LOCATION OF STRUCTURES AND ALL INFORMATION AND DIMENSIONS NOT SHOWN ON STRUCTURAL DRAWINGS.
4. SEE 4/S-3 FOR REQUIREMENTS AT EXCAVATIONS PARALLEL TO BUILDING FOUNDATION.

GRAPHIC SCALE

0 6" 1' 2' 4' 8'

3/8"=1'-0"

AustinTsutsumi & ASSOCIATES, INC.
CIVIL ENGINEERS I SURVEYORS
HONOLULU I WAILUKU I HILO, HAWAII

501 SUMNER STREET, SUITE 521
HONOLULU, HAWAII 96817

PHONE: 808-533-3646
FAX: 808-526-1267

STATE OF HAWAII
DEPARTMENT OF
HAWAIIAN HOME LANDS

PULEHUNUI
REGIONAL
INFRASTRUCTURE

AUSTIN, TSUTSUMI & ASSOC., INC.
ENGINEERS, SUVEYORS • HONOLULU, HAWAII

GEORGE O. GUTIERREZ JR.
LICENSED PROFESSIONAL ENGINEER
NO. 12107-S
HAWAII, U.S.A.

This work was prepared by me or under my supervision and construction of this project will be under my observation. (Observation of construction as defined in Chapter 16-115 Subchapter 1 Definitions of the Hawaii Administrative Rules "Professional Engineers, Architects, Surveyors, and Landscape Architects.")

SIGNATURE — APRIL 30, 2020 — EXP. DATE OF THE LICENSE

0 1 2
LINE IS 2 INCHES AT FULL SIZE
(IF NOT 2-inches : Scale Accordingly)

REVISION	DATE	BRIEF	BY

Project No:	16-576
Scale:	AS NOTED
Date:	1/22/20
Designed By:	CK
Drawn By:	LL
Checked By:	GG

SLUDGE DEWATERING PLATFORM AND ROOF FRAMING PLANS

DWG. NO.

SB-12

SHEET 155 OF 201

FILE	POCKET	FOLDER	NO.

JOB NO. 0-11-056.004
FN: F:\19JOB.DWG\19060 DHHL PULEHUNUI\DWGS_19060\STRUCT_19060\DWGS_19060\DRAWINGS.DWG

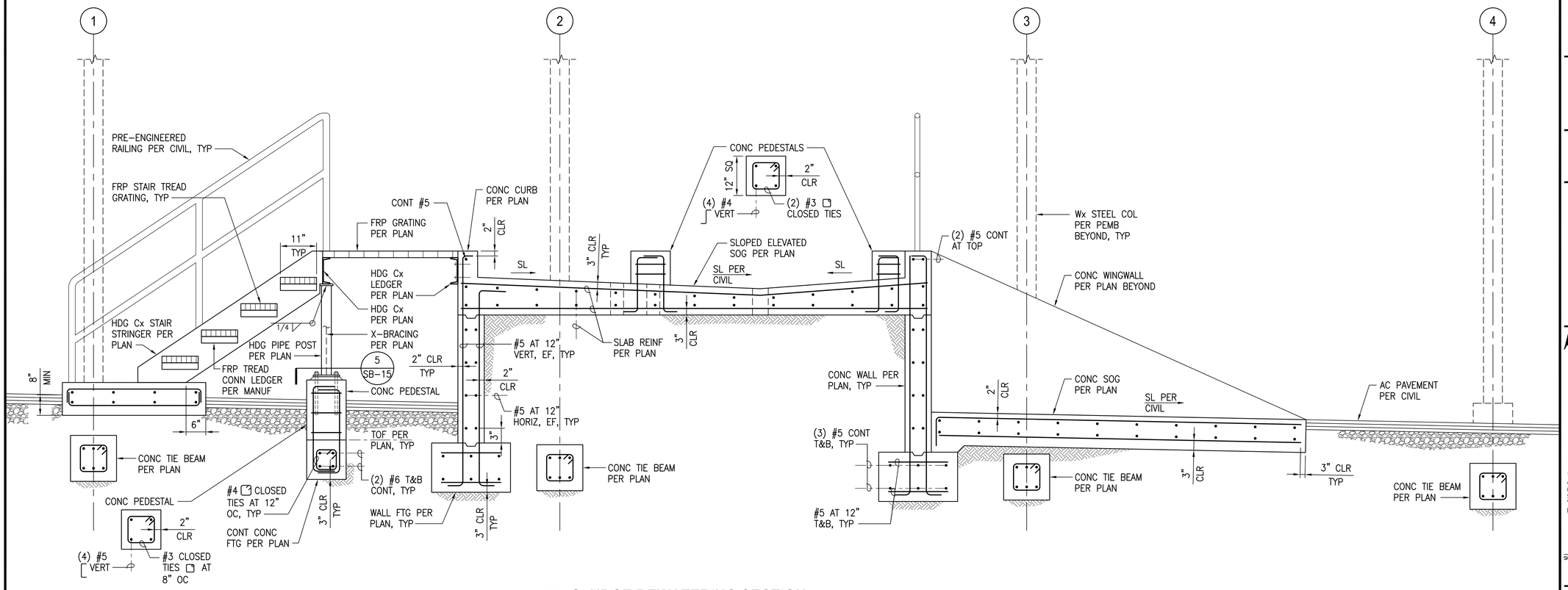

1 SLUDGE DEWATERING SECTION

SCALE: 3/4" = 1'-0"

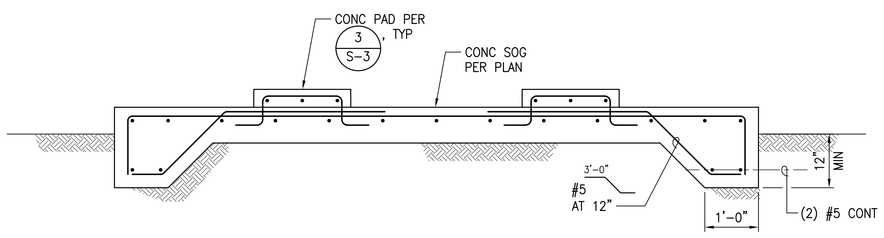

2 SLUDGE DEWATERING SECTION

SCALE: 3/4" = 1'-0"

GRAPHIC SCALE

0 6" 1' 2' 4'

3/4"=1'-0"

AustinTsutsumi & ASSOCIATES, INC.
CIVIL ENGINEERS I SURVEYORS
HONOLULU I WAILUKU I HILO, HAWAII

501 SUMNER STREET, SUITE 521
HONOLULU, HAWAII 96817

PHONE: 808-533-3646
FAX: 808-526-1267

STATE OF HAWAII
DEPARTMENT OF
HAWAIIAN HOME LANDS

PULEHUNUI
REGIONAL
INFRASTRUCTURE

AUSTIN, TSUTSUMI & ASSOC., INC.
ENGINEERS, SURVEYORS • HONOLULU, HAWAII

GEORGE O. GUTIERREZ JR.
LICENSED PROFESSIONAL ENGINEER
NO. 12107-S
HAWAII, U.S.A.

This work was prepared by me or under my supervision and construction of this project will be under my observation. (Observation of construction as defined in Chapter 16-115 Subchapter 1 Definitions of the Hawaii Administrative Rules "Professional Engineers, Architects, Surveyors, and Landscape Architects.")

SIGNATURE — APRIL 30, 2020 EXP. DATE OF THE LICENSE

0 1 2
LINE IS 2 INCHES AT FULL SIZE
(If NOT 2-inches : Scale Accordingly)

REVISION	DATE	BRIEF	BY

Project No:	16-576
Scale:	AS NOTED
Date:	1/22/20
Designed By:	CK
Drawn By:	LL
Checked By:	GG

SLUDGE DEWATERING SECTIONS

DWG. NO.

SB-13

SHEET 156 OF 201

FILE	POCKET	FOLDER	NO.

JOB NO. 0-11-056.004
FN: F:\19JOB.DWG\19060 DHHL PULEHUNUI\DWGS_19060\STRUCT_19060\DWGS_19060\DRAWINGS.DWG

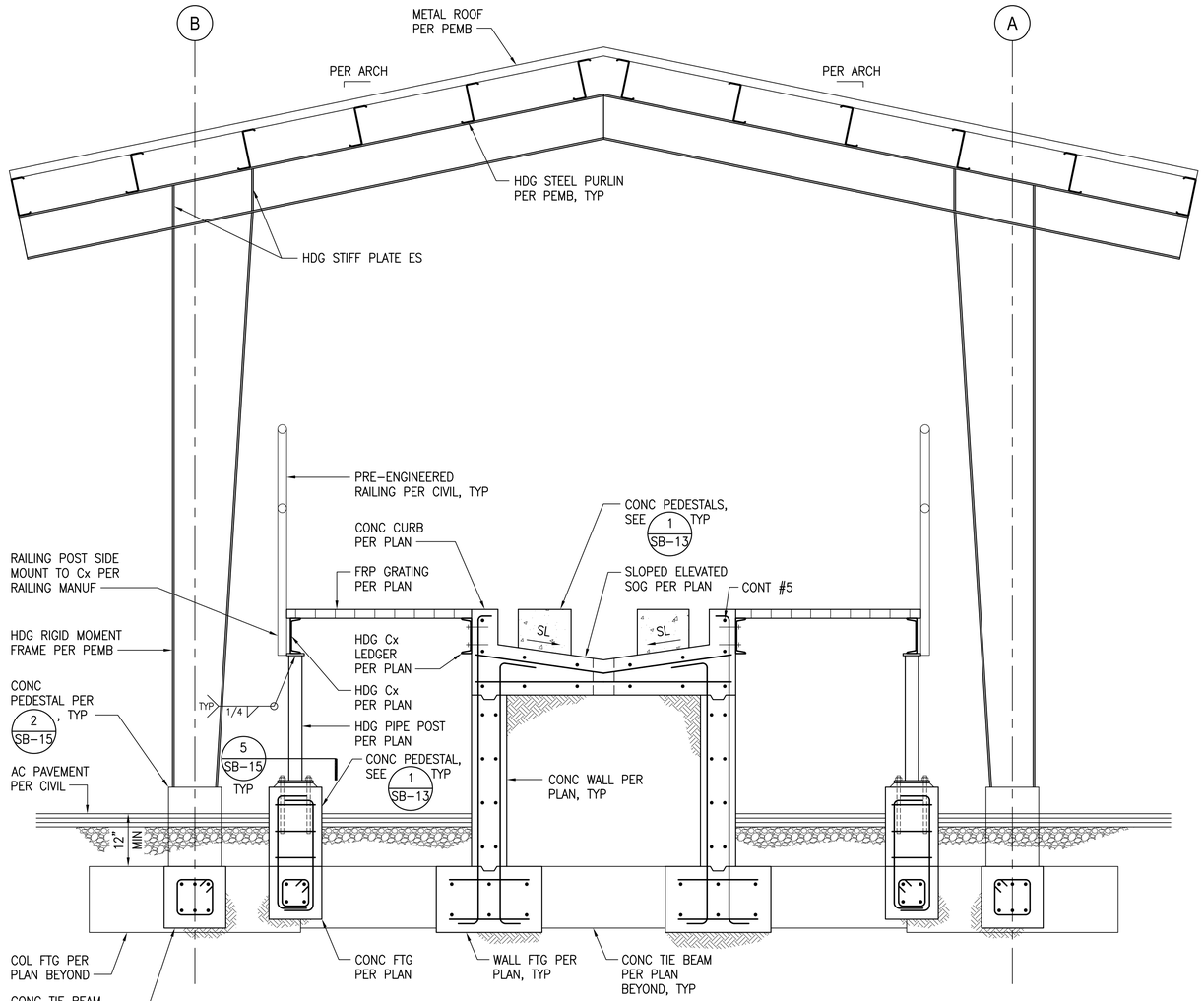

NOTE:
FOR BALANCE OF INFORMATION NOT SHOWN, SEE SHEET SB-13.

1 SLUDGE DEWATERING SECTION

SCALE: 3/4" = 1'-0"

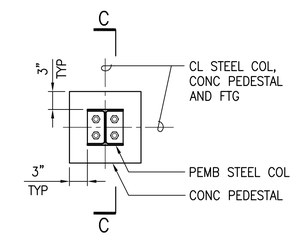

PLAN A–A

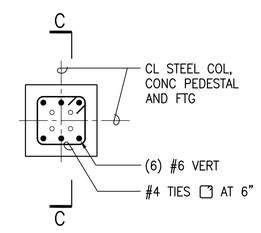

PLAN B–B
PEDESTAL SECTION

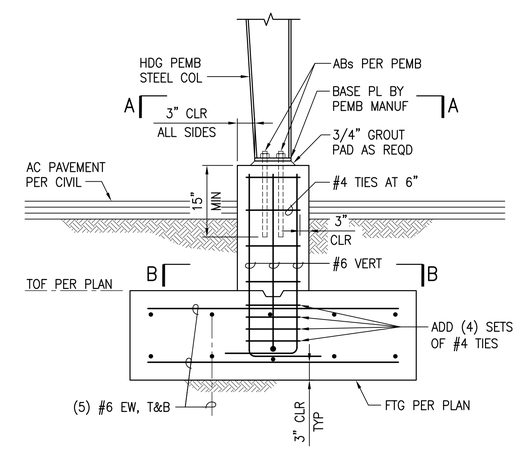

SECTION C–C

2 DETAIL - PEDESTAL AT PORTAL FRAME

SCALE: 1" = 1'-0"

GRAPHIC SCALE

0 6" 1' 2' 4'
3/4"=1'-0"

0 3" 6" 1' 2' 3'
1"=1'-0"

AustinTsutsumi
& ASSOCIATES, INC.
CIVIL ENGINEERS I SURVEYORS
HONOLULU I WAILUKU I HILO, HAWAII

501 SUMNER STREET, SUITE 521
HONOLULU, HAWAII 96817

PHONE: 808-533-3646
FAX: 808-526-1267

STATE OF HAWAII
DEPARTMENT OF
HAWAIIAN HOME LANDS

PULEHUNUI
REGIONAL
INFRASTRUCTURE

AUSTIN, TSUTSUMI & ASSOC., INC.
ENGINEERS, SUVEYORS • HONOLULU, HAWAII

GEORGE O. GUTIERREZ JR.
LICENSED PROFESSIONAL ENGINEER
NO. 12107-S
HAWAII, U.S.A.

This work was prepared by me or under my supervision and construction of this project will be under my observation. (Observation of construction as defined in Chapter 16-115 Subchapter 1 Definitions of the Hawaii Administrative Rules "Professional Engineers, Architects, Surveyors, and Landscape Architects.")

SIGNATURE — APRIL 30, 2020 EXP. DATE OF THE LICENSE

0 1 2
LINE IS 2 INCHES AT FULL SIZE
(If NOT 2-inches : Scale Accordingly)

REVISION	DATE	BRIEF	BY

Project No:	16-576
Scale:	AS NOTED
Date:	1/22/20
Designed By:	CK
Drawn By:	LL
Checked By:	GG

SLUDGE DEWATERING
SECTION AND DETAIL

DWG. NO.
SB-14

SHEET 157 OF 201

FILE	POCKET	FOLDER	NO.

JOB NO. 0-11-056.004
FN: F:\19JOB.DWG\19060 DHHL PULEHUNUI\DWGS_19060\STRUCT_19060\DWGS_19060\DRAWINGS.DWG

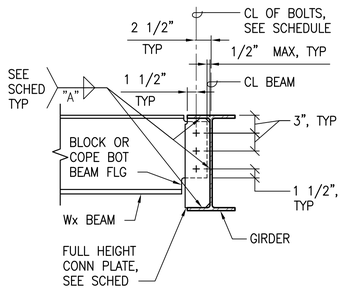

ONE SIDE BEAM TO BEAM

BEAM SHEAR CONNECTION SCHEDULE				
SHEAR PLATE CONNECTION				SLOTTED HOLES (NOTE 2)
MEMBER (DEPTH)	# OF BOLTS 7/8" DIA	CONN PL "t"	WELD SIZE "A"	
W6, C6, W8, C8	2	1/4"	1/4"	–
W10, C10	2	1/4"	1/4"	–
W12, C12	3	1/4"	1/4"	–

BEAM CONNECTION NOTES

1. ALL BOLTS: SEE S-1.
2. BEAM SHALL HAVE HORIZONTAL SHORT SLOTTED HOLES IN THE TOP MOST AND BOTTOM MOST BOLT HOLES FOR THE NUMBER NOTED IN THE CONNECTION SCHEDULE.

1 TYPICAL BEAM TO BEAM SHEAR CONNECTION DETAILS
NOT TO SCALE

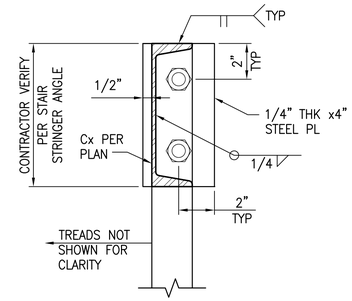

2 DETAIL - STAIR STRINGER ANCHORAGE
NOT TO SCALE

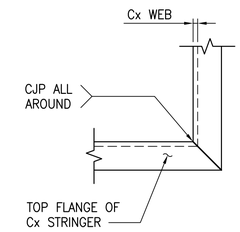

3 DETAIL - Cx CORNER
NOT TO SCALE

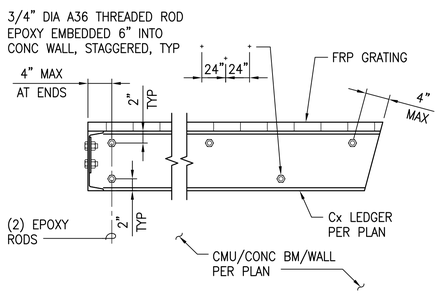

4 DETAIL - Cx LEDGER
NOT TO SCALE

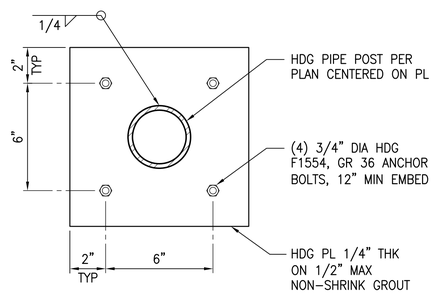

5 DETAIL - POST BASE PLATE
NOT TO SCALE

AustinTsutsumi & ASSOCIATES, INC.
CIVIL ENGINEERS I SURVEYORS
HONOLULU I WAILUKU I HILO, HAWAII

501 SUMNER STREET, SUITE 521
HONOLULU, HAWAII 96817

PHONE: 808-533-3646
FAX: 808-526-1267

STATE OF HAWAII
DEPARTMENT OF HAWAIIAN HOME LANDS

PULEHUNUI REGIONAL INFRASTRUCTURE

AUSTIN, TSUTSUMI & ASSOC., INC.
ENGINEERS, SUVEYORS • HONOLULU, HAWAII

GEORGE Q. GUTIERREZ JR.
LICENSED PROFESSIONAL ENGINEER
NO. 12107-S
HAWAII, U.S.A.

This work was prepared by me or under my supervision and construction of this project will be under my observation. (Observation of construction as defined in Chapter 16-115 Subchapter 1 Definitions of the Hawaii Administrative Rules "Professional Engineers, Architects, Surveyors, and Landscape Architects.")

SIGNATURE — APRIL 30, 2020 EXP. DATE OF THE LICENSE

0 1 2
LINE IS 2 INCHES AT FULL SIZE
(If NOT 2-inches : Scale Accordingly)

REVISION	DATE	BRIEF	BY

Project No:	16-576
Scale:	AS NOTED
Date:	1/22/20
Designed By:	CK
Drawn By:	LL
Checked By:	GG

DETAILS

DWG. NO.
SB-15

FILE	POCKET	FOLDER	NO.

JOB NO. O-11-056.004
FN: F:\19.OB.DWG\19060 DHHL PULEHUNUI\DWGS_19060\STRUCT_19060\DWGS_19060\DRAWINGS.DWG

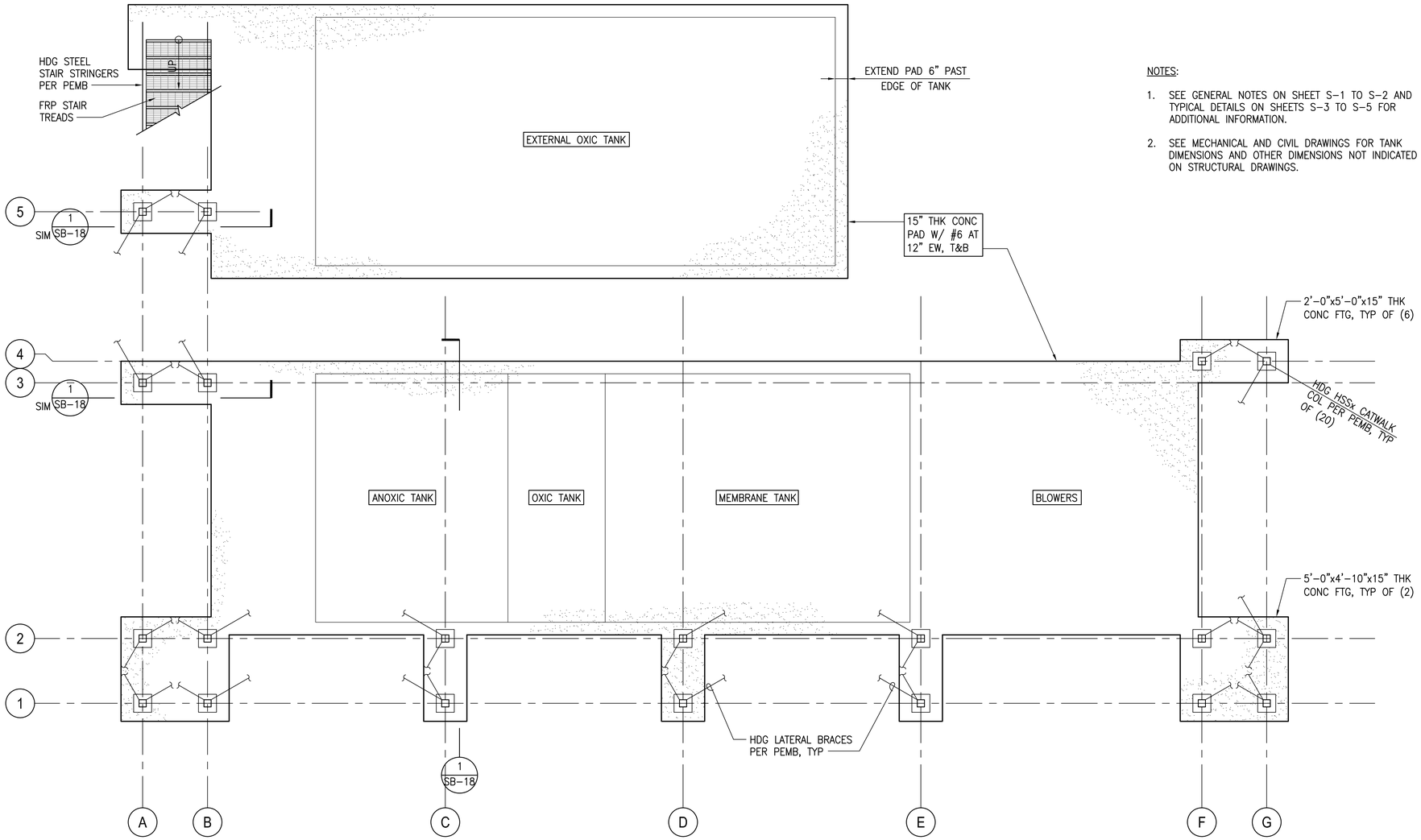

NOTES:

1. SEE GENERAL NOTES ON SHEET S-1 TO S-2 AND TYPICAL DETAILS ON SHEETS S-3 TO S-5 FOR ADDITIONAL INFORMATION.
2. SEE MECHANICAL AND CIVIL DRAWINGS FOR TANK DIMENSIONS AND OTHER DIMENSIONS NOT INDICATED ON STRUCTURAL DRAWINGS.

A MBR TANK FOUNDATION PLAN

SCALE: 3/8" = 1'-0"

NORTH

GRAPHIC SCALE

0 6" 1' 2' 4' 8'

3/8"=1'-0"

AustinTsutsumi
& ASSOCIATES, INC.
CIVIL ENGINEERS I SURVEYORS
HONOLULU I WAILUKU I HILO, HAWAII

501 SUMNER STREET, SUITE 521
HONOLULU, HAWAII 96817

PHONE: 808-533-3646
FAX: 808-526-1267

STATE OF HAWAII
DEPARTMENT OF
HAWAIIAN HOME LANDS

PULEHUNUI
REGIONAL
INFRASTRUCTURE

AUSTIN, TSUTSUMI & ASSOC., INC.
ENGINEERS, SUVEYORS • HONOLULU, HAWAII

GEORGE O. GUTIERREZ JR.
LICENSED PROFESSIONAL ENGINEER
NO. 12107-S
HAWAII, U.S.A.

This work was prepared by me or under my supervision and construction of this project will be under my observation. (Observation of construction as defined in Chapter 16-115 Subchapter 1 Definitions of the Hawaii Administrative Rules "Professional Engineers, Architects, Surveyors, and Landscape Architects.")

SIGNATURE

APRIL 30, 2020
EXP. DATE OF THE LICENSE

0 1 2
LINE IS 2 INCHES AT FULL SIZE
(If NOT 2-inches : Scale Accordingly)

REVISION	DATE	BRIEF	BY

Project No:	16-576
Scale:	AS NOTED
Date:	1/22/20
Designed By:	CK
Drawn By:	LL
Checked By:	GG

MBR TANK
FOUNDATION PLAN

DWG. NO.

SB-16

SHEET 159 OF 201

FILE	POCKET	FOLDER	NO.

JOB NO. 0-11-056.004
FN: F:\19JOB.DWG\19060 DHHL PULEHUNUI\DWGS_19060\STRUCT_19060\DWGS_19060\DRAWINGS.DWG

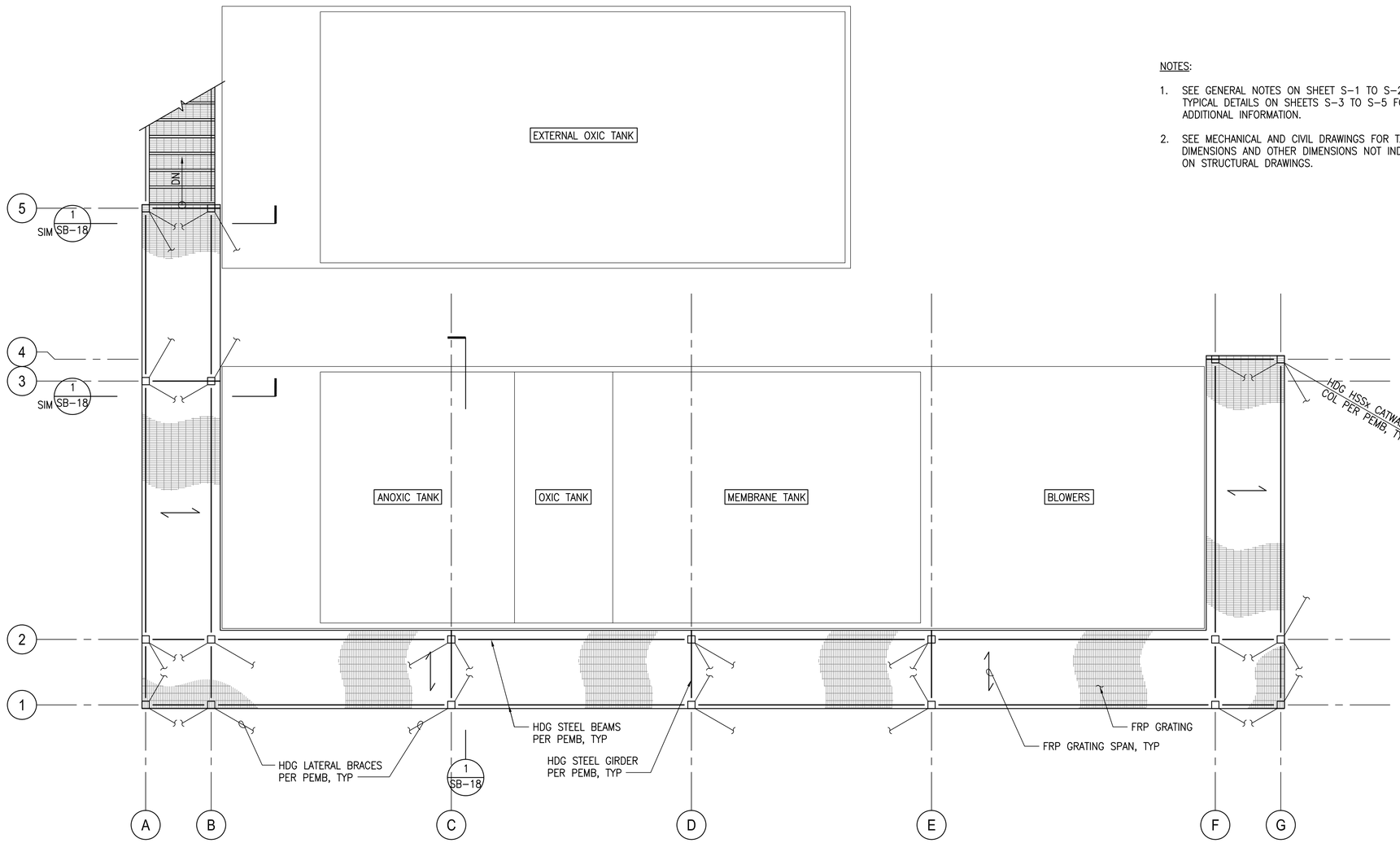

NOTES:

1. SEE GENERAL NOTES ON SHEET S-1 TO S-2 AND TYPICAL DETAILS ON SHEETS S-3 TO S-5 FOR ADDITIONAL INFORMATION.
2. SEE MECHANICAL AND CIVIL DRAWINGS FOR TANK DIMENSIONS AND OTHER DIMENSIONS NOT INDICATED ON STRUCTURAL DRAWINGS.

A MBR TANK CATWALK FRAMING PLAN

SCALE: 3/8" = 1'-0"

NORTH

GRAPHIC SCALE

0 6" 1' 2' 4' 8'

3/8"=1'-0"

AustinTsutsumi & ASSOCIATES, INC.
CIVIL ENGINEERS I SURVEYORS
HONOLULU I WAILUKU I HILO, HAWAII

501 SUMNER STREET, SUITE 521
HONOLULU, HAWAII 96817

PHONE: 808-533-3646
FAX: 808-526-1267

STATE OF HAWAII
DEPARTMENT OF
HAWAIIAN HOME LANDS

PULEHUNUI
REGIONAL
INFRASTRUCTURE

AUSTIN, TSUTSUMI & ASSOC., INC.
ENGINEERS, SUVEYORS • HONOLULU, HAWAII

GEORGE O. GUTIERREZ JR.
LICENSED PROFESSIONAL ENGINEER
NO. 12107-S
HAWAII, U.S.A.

This work was prepared by me or under my supervision and construction of this project will be under my observation. (Observation of construction as defined in Chapter 16-115 Subchapter 1 Definitions of the Hawaii Administrative Rules "Professional Engineers, Architects, Surveyors, and Landscape Architects.")

SIGNATURE

APRIL 30, 2020
EXP. DATE OF THE LICENSE

0 1 2
LINE IS 2 INCHES AT FULL SIZE
(If NOT 2-inches : Scale Accordingly)

REVISION	DATE	BRIEF	BY

Project No:	16-576
Scale:	AS NOTED
Date:	1/22/20
Designed By:	CK
Drawn By:	LL
Checked By:	GG

MBR TANK CATWALK
FRAMING PLAN

DWG. NO.

SB-17

SHEET 160 OF 201

FILE	POCKET	FOLDER	NO.

JOB NO. 0-11-056.004
FN: F:\19JOB.DWG\19060_DHHL_PULEHUNUI\DWGS_19060\STRUCT_19060\DWGS_19060\DRAWINGS.DWG

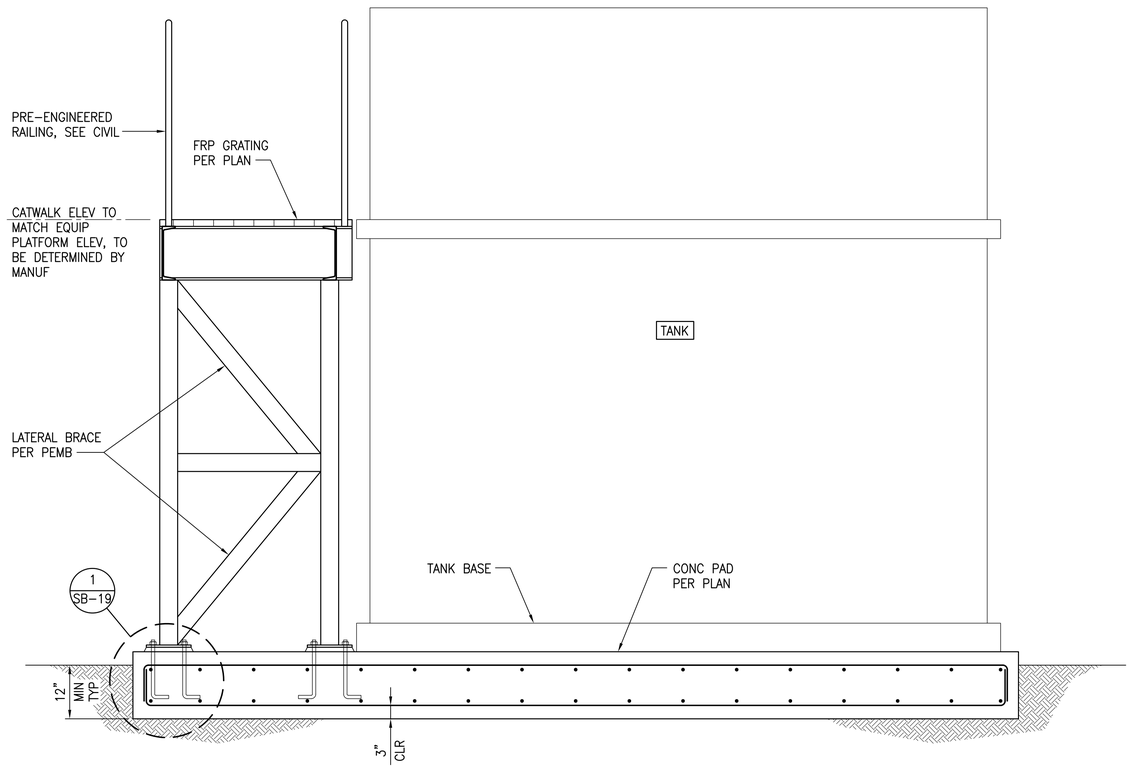

1 MBR TANK CATWALK SECTION

SCALE: 3/4" = 1'-0"

GRAPHIC SCALE

0 6" 1' 2' 4'

3/4"=1'-0"

AustinTsutsumi
& ASSOCIATES, INC.
CIVIL ENGINEERS I SURVEYORS
HONOLULU I WAILUKU I HILO, HAWAII

501 SUMNER STREET, SUITE 521
HONOLULU, HAWAII 96817

PHONE: 808-533-3646
FAX: 808-526-1267

STATE OF HAWAII
DEPARTMENT OF
HAWAIIAN HOME LANDS

PULEHUNUI
REGIONAL
INFRASTRUCTURE

AUSTIN, TSUTSUMI & ASSOC., INC.
ENGINEERS, SUVEYORS • HONOLULU, HAWAII

GEORGE O. GUTIERREZ JR.
LICENSED PROFESSIONAL ENGINEER
NO. 12107-S
HAWAII, U.S.A

This work was prepared by me or under my supervision and construction of this project will be under my observation. (Observation of construction as defined in Chapter 16-115 Subchapter 1 Definitions of the Hawaii Administrative Rules "Professional Engineers, Architects, Surveyors, and Landscape Architects.")

SIGNATURE — APRIL 30, 2020 EXP. DATE OF THE LICENSE

0 1 2
LINE IS 2 INCHES AT FULL SIZE
(IF NOT 2-inches : Scale Accordingly)

REVISION	DATE	BRIEF	BY

Project No:	16-576
Scale:	AS NOTED
Date:	1/22/20
Designed By:	CK
Drawn By:	LL
Checked By:	GG

MBR TANK
CATWALK SECTION

DWG. NO.

SB-18

SHEET 161 OF 201

FILE	POCKET	FOLDER	NO.

JOB NO. 0-11-056.004
FN: F:\19JOB.DWG\19060 DHHL PULEHUNUI\DWGS_19060\STRUCT_19060\DWGS_19060\DRAWINGS.DWG

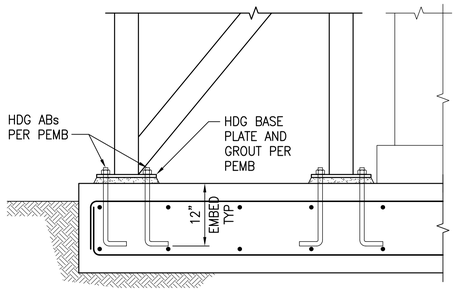

1 **CATWALK COLUMN ANCHORAGE**
SCALE: 1" = 1'-0"

GRAPHIC SCALE

0 3" 6" 1' 2' 3'
1"=1'-0"

AustinTsutsumi
& ASSOCIATES, INC.
CIVIL ENGINEERS I SURVEYORS
HONOLULU I WAILUKU I HILO, HAWAII

501 SUMNER STREET, SUITE 521
HONOLULU, HAWAII 96817

PHONE: 808-533-3646
FAX: 808-526-1267

STATE OF HAWAII
DEPARTMENT OF
HAWAIIAN HOME LANDS

PULEHUNUI
REGIONAL
INFRASTRUCTURE

AUSTIN, TSUTSUMI & ASSOC., INC.
ENGINEERS, SUVEYORS • HONOLULU, HAWAII

GEORGE O. GUTIERREZ JR.
LICENSED
PROFESSIONAL
ENGINEER
NO. 12107-S
HAWAII, U.S.A

This work was prepared by me or under my supervision and construction of this project will be under my observation. (Observation of construction as defined in Chapter 16-115 Subchapter 1 Definitions of the Hawaii Administrative Rules "Professional Engineers, Architects, Surveyors, and Landscape Architects.")

SIGNATURE — APRIL 30, 2020 EXP. DATE OF THE LICENSE

0 1 2
LINE IS 2 INCHES AT FULL SIZE
(If NOT 2-inches : Scale Accordingly)

REVISION	DATE	BRIEF	BY

Project No:	16-576
Scale:	AS NOTED
Date:	1/22/20
Designed By:	CK
Drawn By:	LL
Checked By:	GG

DETAILS

DWG. NO.
SB-19

SHEET 162 OF 201

FILE	POCKET	FOLDER	NO.

JOB NO. 0-11-056.004
F/N: F:\19JOB.DWG\19060 DHHL PULEHUNUI\DWGS_19060\STRUCT_19060\DWGS_19060\DRAWINGS.DWG

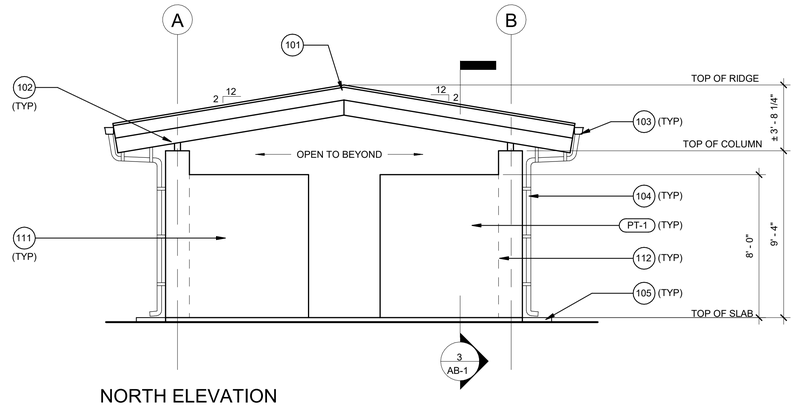

NORTH ELEVATION

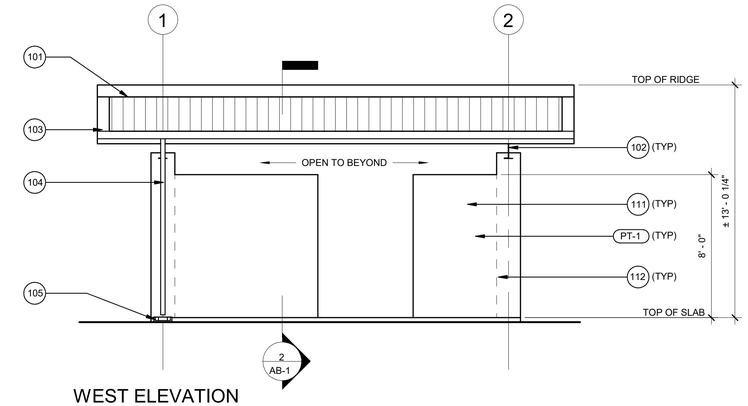

WEST ELEVATION

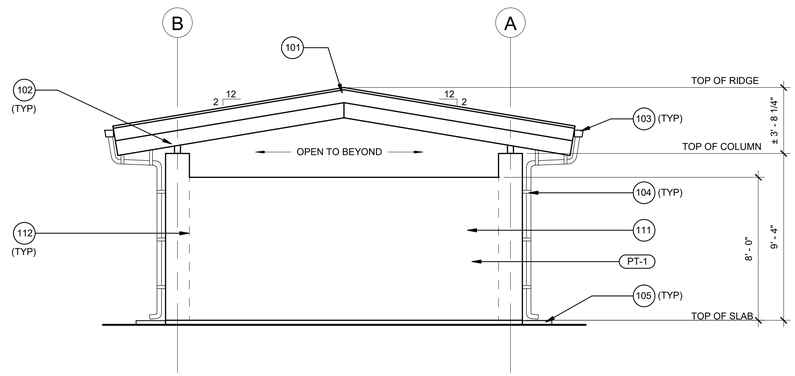

SOUTH ELEVATION

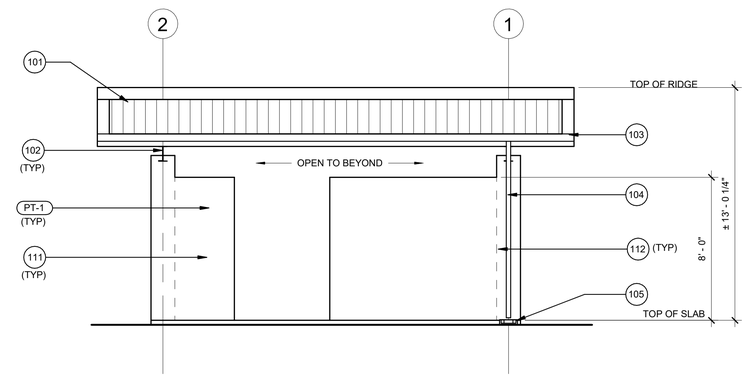

EAST ELEVATION

1 BLOWER AND MCC EXTERIOR ELEVATIONS
SCALE: 1/4" = 1'-0"

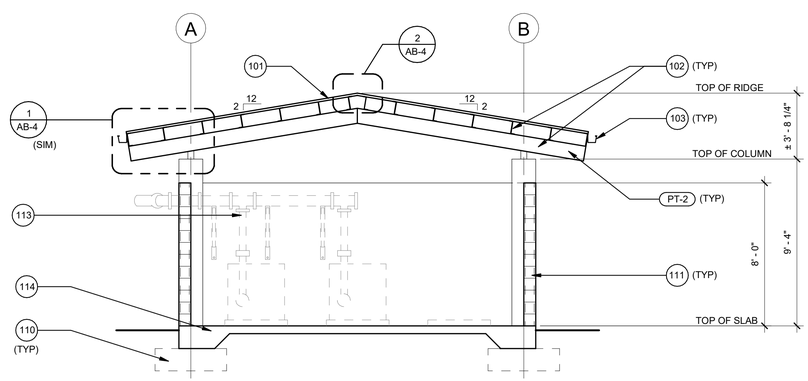

2 BLOWER AND MCC CROSS SECTION
SCALE: 1/4" = 1'-0"

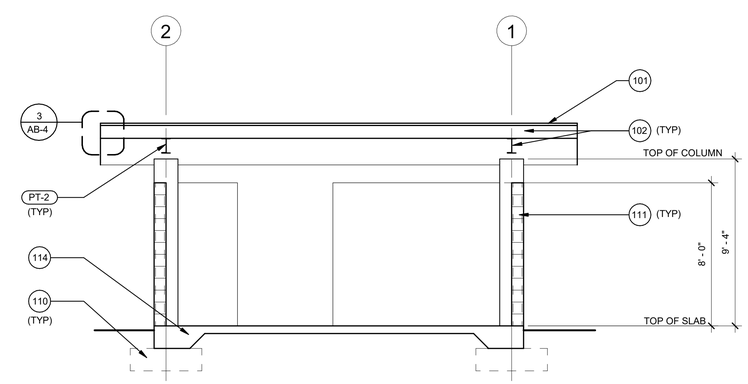

3 BLOWER AND MCC LONGITUDINAL SECTION
SCALE: 1/4" = 1'-0"

KEYNOTES

KEY	DESCRIPTION
101	PRE-FINISHED METAL ROOF & FLASHING
102	PRE-ENGINEERED METAL BUILDING (SEE STRUCTURAL DRAWINGS)
103	PRE-FINISHED METAL GUTTER
104	3" DIA PRE-FINISHED METAL DOWNSPOUT W/ S.S. DOWNSPOUT BRACKETS @ 4'0" O.C. (MAX)
105	PRE-CAST SPLASH BLOCK
106	PRE-ENGINEERED RAILING (SEE CIVIL DRAWINGS)
107	CROSS BRACING (SEE STRUCTURAL DRAWINGS)
108	CONCRETE WALL (SEE STRUCTURAL DRAWINGS)
109	CONCRETE TIE BEAM (SEE STRUCTURAL DRAWINGS)
110	CONCRETE FOOTING (SEE STRUCTURAL DRAWINGS)
111	CMU WALL (SEE STRUCTURAL DRAWINGS)
112	COLUMN BEYOND (SEE STRUCTURAL DRAWINGS)
113	EQUIPMENT (SEE CIVIL DRAWINGS)
114	CONCRETE SLAB (SEE STRUCTURAL DRAWINGS)
115	AC PAVEMENT (SEE CIVIL DRAWINGS)

Austin Tsutsumi
& ASSOCIATES, INC.
CIVIL ENGINEERS I SURVEYORS
HONOLULU I WAILUKU I HILO, HAWAII

501 SUMNER STREET, SUITE 521
HONOLULU, HAWAII 96817

PHONE: 808-533-3646
FAX: 808-526-1267

STATE OF HAWAII
DEPARTMENT OF
HAWAIIAN HOME LANDS

PULEHUNUI
REGIONAL
INFRASTRUCTURE

AUSTIN, TSUTSUMI & ASSOC., INC.
ENGINEERS, SURVEYORS · HONOLULU, HAWAII

ANN A. KUTAKA
LICENSED
PROFESSIONAL
ARCHITECT
No. 6239
HAWAII, U.S.A.

This work was prepared by me or under my supervision and construction of this project will be under my observation. (Observation of construction as defined in Chapter 16-115 Subchapter 1 Definitions of the Hawaii Administrative Rules "Professional Engineers, Architects, Surveyors, and Landscape Architects.")

SIGNATURE APRIL 30, 2020
EXP. DATE OF THE LICENSE

0 1 2
LINE IS 2 INCHES AT FULL SIZE
(IF NOT 2-inches : Scale Accordingly)

REVISION	DATE	BRIEF	BY

Project No:	16-576
Scale:	AS NOTED
Date:	1/29/20
Designed By:	BHK
Drawn By:	BHK
Checked By:	

BLOWER AND MCC
ELEVATION &
SECTION

DWG. NO.

AB-1

SHEET 163 OF 200

FILE	POCKET	FOLDER	NO.

JOB NO. 0-11-056.004
C:\Users\dropsd\Documents\19-003-VA0_Pulehunui_B2G-C_Civil_FSI.rvt

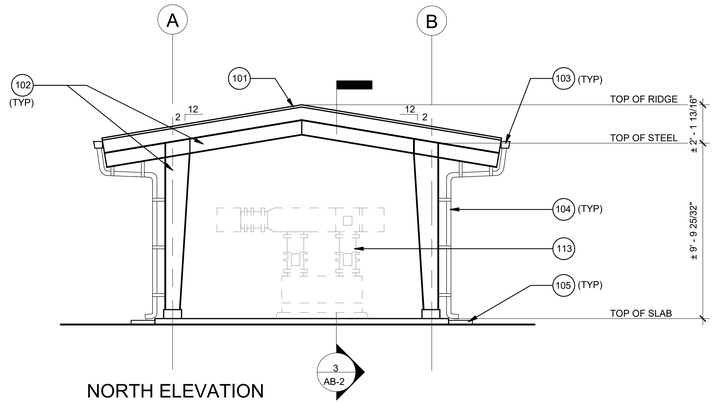

NORTH ELEVATION

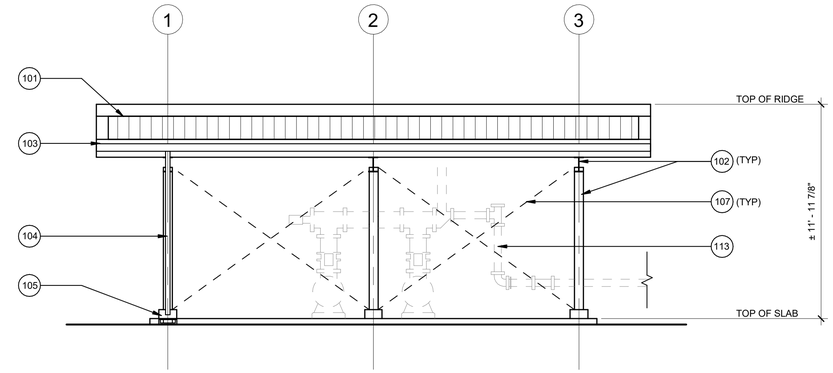

WEST ELEVATION

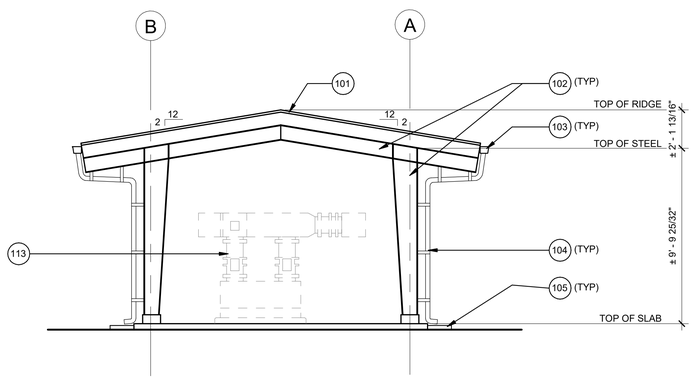

SOUTH ELEVATION

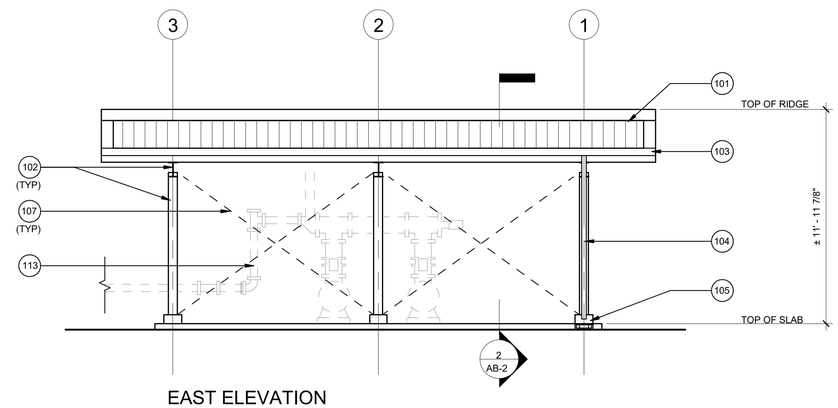

EAST ELEVATION

1 AEROBIC DIGESTER EXTERIOR ELEVATIONS
SCALE: 1/4" = 1'-0"

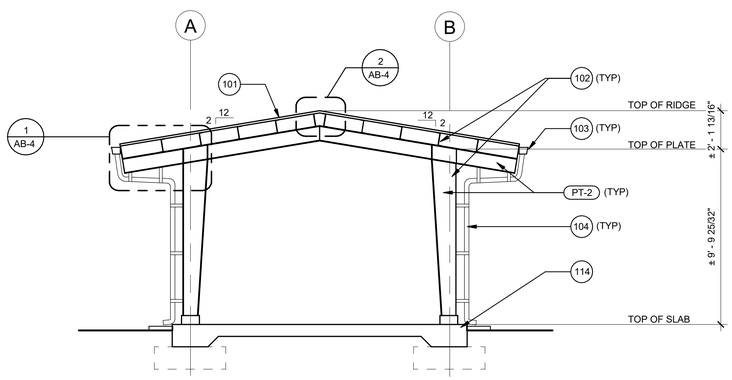

2 AEROBIC DIGESTER CROSS SECTION
SCALE: 1/4" = 1'-0"

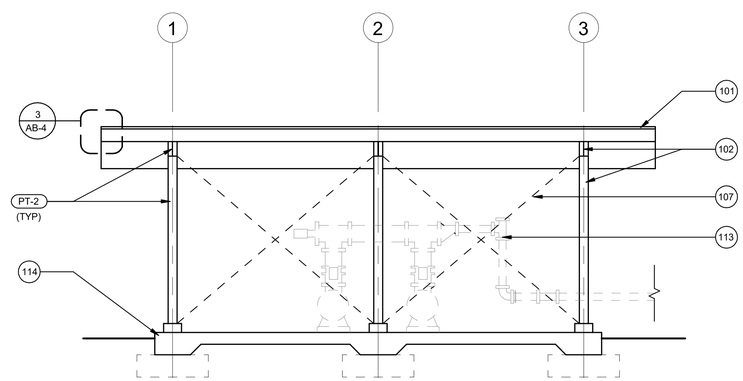

3 AEROBIC DIGESTER LONGITUDINAL SECTION
SCALE: 1/4" = 1'-0"

KEYNOTES

KEY	DESCRIPTION
101	PRE-FINISHED METAL ROOF & FLASHING
102	PRE-ENGINEERED METAL BUILDING (SEE STRUCTURAL DRAWINGS)
103	PRE-FINISHED METAL GUTTER
104	3" DIA PRE-FINISHED METAL DOWNSPOUT W/ S.S. DOWNSPOUT BRACKETS @ 4'0" O.C. (MAX)
105	PRE-CAST SPLASH BLOCK
106	PRE-ENGINEERED RAILING (SEE CIVIL DRAWINGS)
107	CROSS BRACING (SEE STRUCTURAL DRAWINGS)
108	CONCRETE WALL (SEE STRUCTURAL DRAWINGS)
109	CONCRETE TIE BEAM (SEE STRUCTURAL DRAWINGS)
110	CONCRETE FOOTING (SEE STRUCTURAL DRAWINGS)
111	CMU WALL (SEE STRUCTURAL DRAWINGS)
112	COLUMN BEYOND (SEE STRUCTURAL DRAWINGS)
113	EQUIPMENT (SEE CIVIL DRAWINGS)
114	CONCRETE SLAB (SEE STRUCTURAL DRAWINGS)
115	AC PAVEMENT (SEE CIVIL DRAWINGS)

Austin Tsutsumi
& ASSOCIATES, INC.
CIVIL ENGINEERS I SURVEYORS
HONOLULU I WAILUKU I HILO, HAWAII

501 SUMNER STREET, SUITE 521
HONOLULU, HAWAII 96817

PHONE: 808-533-3646
FAX: 808-526-1267

STATE OF HAWAII
DEPARTMENT OF
HAWAIIAN HOME LANDS

PULEHUNUI
REGIONAL
INFRASTRUCTURE

AUSTIN, TSUTSUMI & ASSOC., INC.
ENGINEERS, SURVEYORS · HONOLULU, HAWAII

ANN A. KUTAKA
LICENSED PROFESSIONAL ARCHITECT
No. 6239
HAWAII, U.S.A.

This work was prepared by me or under my supervision and construction of this project will be under my observation. (Observation of construction as defined in Chapter 16-115 Subchapter 1 Definitions of the Hawaii Administrative Rules "Professional Engineers, Architects, Surveyors, and Landscape Architects.")

APRIL 30, 2020
SIGNATURE EXP. DATE OF THE LICENSE

0 1 2
LINE IS 2 INCHES AT FULL SIZE
(If NOT 2-inches : Scale Accordingly)

REVISION	DATE	BRIEF	BY

Project No:	16-576
Scale:	AS NOTED
Date:	1/29/20
Designed By:	BHK
Drawn By:	BHK
Checked By:	

AEROBIC
DIGESTER
ELEVATION &
SECTION

DWG. NO.

AB-2

SHEET 164 OF 200

FILE	POCKET	FOLDER	NO.

JOB NO. 0-11-056.004
C:\Users\dropes\Documents\19-060-00_Pulehunui_R20-C_Calo_IFD.rvt

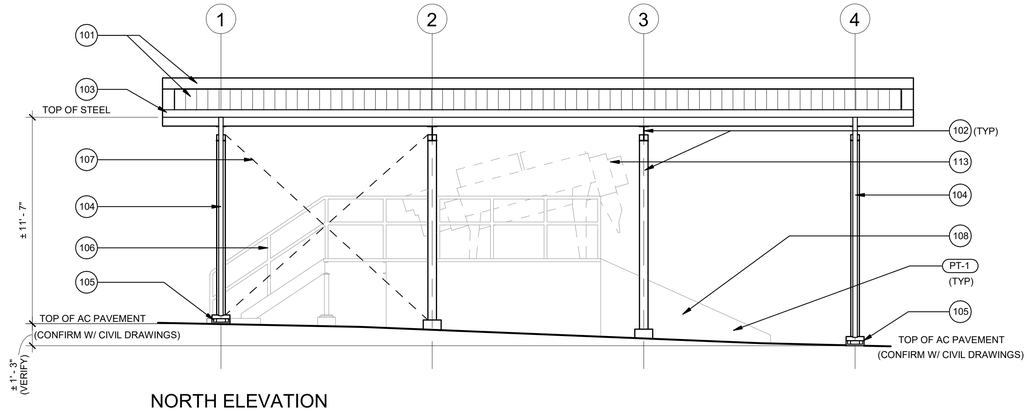

NORTH ELEVATION

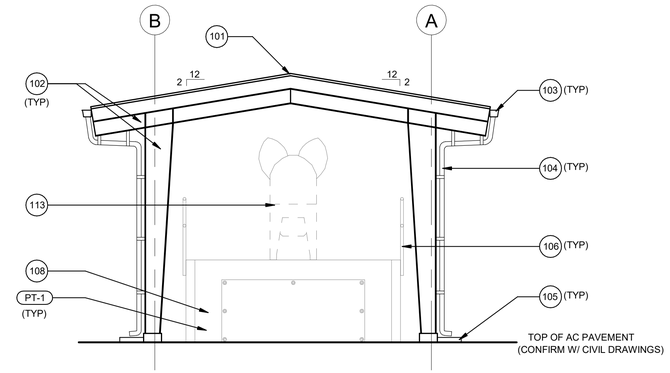

WEST ELEVATION

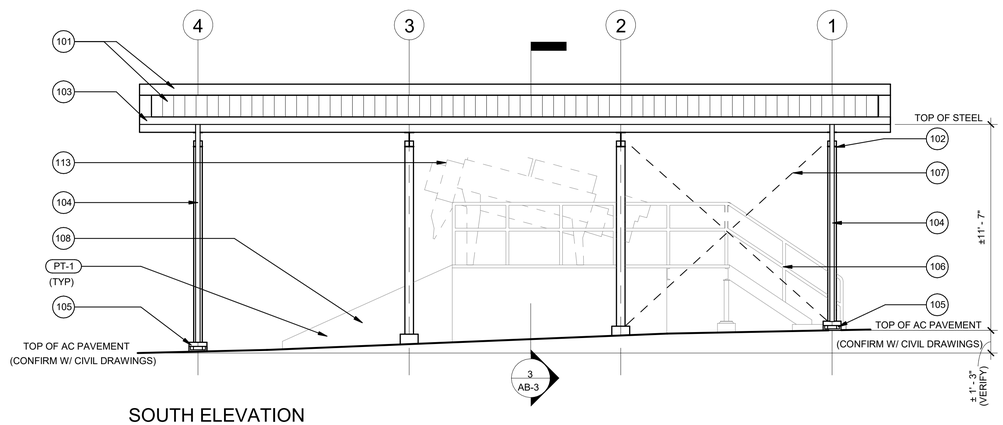

SOUTH ELEVATION

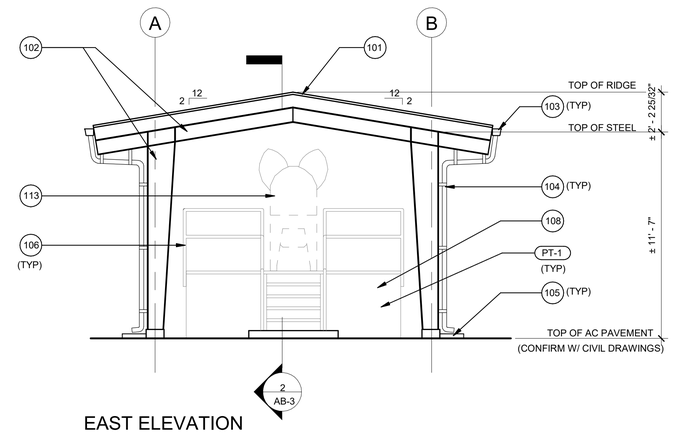

EAST ELEVATION

1 SOLIDS DEWATERING EXTERIOR ELEVATIONS
SCALE: 1/4" = 1'-0"

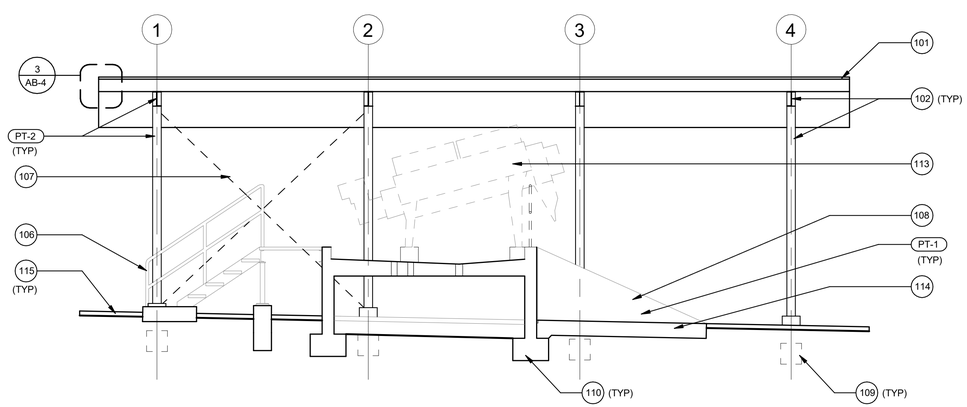

2 SOLIDS DEWATERING LONGITUDINAL SECTION
SCALE: 1/4" = 1'-0"

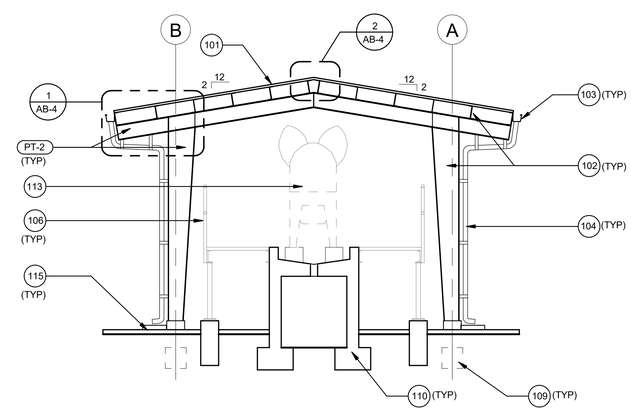

3 SOLIDS DEWATERING CROSS SECTION
SCALE: 1/4" = 1'-0"

KEYNOTES

KEY	DESCRIPTION
101	PRE-FINISHED METAL ROOF & FLASHING
102	PRE-ENGINEERED METAL BUILDING (SEE STRUCTURAL DRAWINGS)
103	PRE-FINISHED METAL GUTTER
104	3" DIA PRE-FINISHED METAL DOWNSPOUT W/ S.S. DOWNSPOUT BRACKETS @ 4'0" O.C. (MAX)
105	PRE-CAST SPLASH BLOCK
106	PRE-ENGINEERED RAILING (SEE CIVIL DRAWINGS)
107	CROSS BRACING (SEE STRUCTURAL DRAWINGS)
108	CONCRETE WALL (SEE STRUCTURAL DRAWINGS)
109	CONCRETE TIE BEAM (SEE STRUCTURAL DRAWINGS)
110	CONCRETE FOOTING (SEE STRUCTURAL DRAWINGS)
111	CMU WALL (SEE STRUCTURAL DRAWINGS)
112	COLUMN BEYOND (SEE STRUCTURAL DRAWINGS)
113	EQUIPMENT (SEE CIVIL DRAWINGS)
114	CONCRETE SLAB (SEE STRUCTURAL DRAWINGS)
115	AC PAVEMENT (SEE CIVIL DRAWINGS)

Austin Tsutsumi
& ASSOCIATES, INC.
CIVIL ENGINEERS I SURVEYORS
HONOLULU I WAILUKU I HILO, HAWAII

501 SUMNER STREET, SUITE 521
HONOLULU, HAWAII 96817

PHONE: 808-533-3646
FAX: 808-526-1267

STATE OF HAWAII
DEPARTMENT OF
HAWAIIAN HOME LANDS

PULEHUNUI
REGIONAL
INFRASTRUCTURE

AUSTIN, TSUTSUMI & ASSOC., INC.
ENGINEERS, SURVEYORS - HONOLULU, HAWAII

ANN A. KUTAKA
LICENSED
PROFESSIONAL
ARCHITECT
No. 6239
HAWAII, U.S.A.

This work was prepared by me or under my supervision and construction of this project will be under my observation. (Observation of construction as defined in Chapter 16-115 Subchapter 1 Definitions of the Hawaii Administrative Rules "Professional Engineers, Architects, Surveyors, and Landscape Architects.")

APRIL 30, 2020
SIGNATURE EXP. DATE OF THE LICENSE

0 1 2
LINE IS 2 INCHES AT FULL SIZE
(IF NOT 2-inches : Scale Accordingly)

REVISION	DATE	BRIEF	BY

Project No:	16-576
Scale:	AS NOTED
Date:	1/29/20
Designed By:	BHK
Drawn By:	BHK
Checked By:	

SOLIDS DEWATERING ELEVATION AND SECTION

DWG. NO.

AB-3

SHEET 165 OF 200

FILE	POCKET	FOLDER	NO.

JOB NO. 0-11-056.004
C:\Users\bryan\Documents\19-003-00_Pulehunui_B30-C_Civil_JFD.rvt

MATERIAL SCHEDULE

MARK	DESCRIPTION	LOCATION	COLOR	FINISH	MANUFACTURER	COMMENTS
PT-1	EXTERIOR PAINT	CMU WALLS	TBD	GLOSS	-	-
PT-2	EXTERIOR PAINT	PRE-ENGINEERED METAL COLUMNS, BEAMS, POSTS, PURLINS, X-BRACING, & FRAMES	TBD	GLOSS	-	-

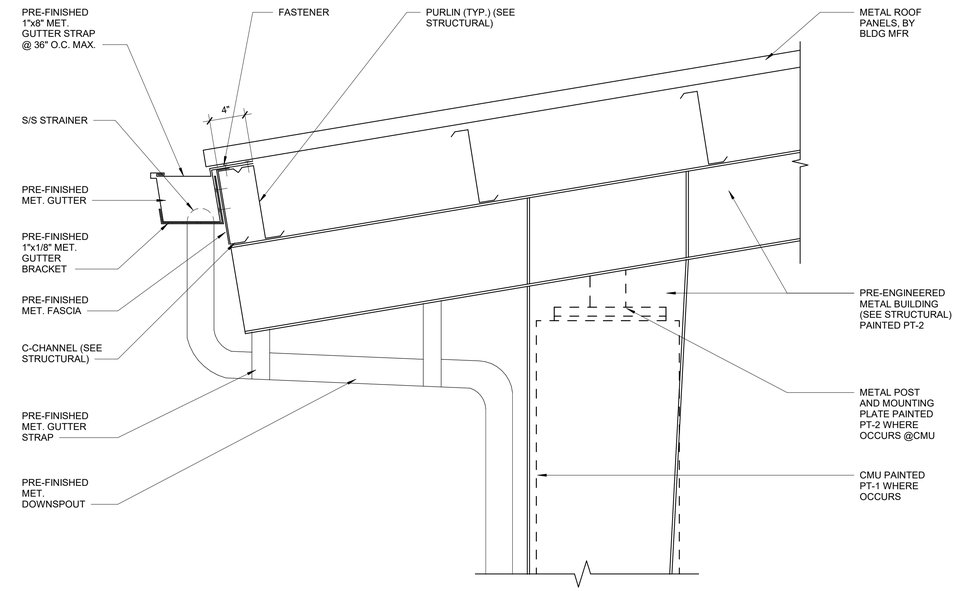

1 GUTTER DETAIL
SCALE: 1 1/2" = 1'-0"

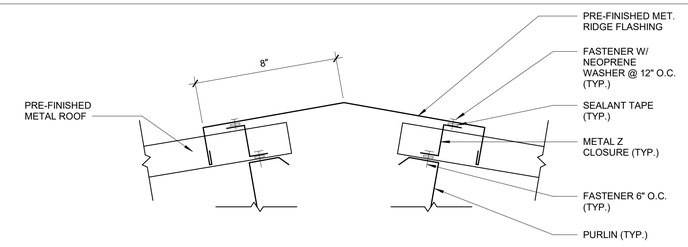

2 RIDGE FLASHING DETAIL
SCALE: 3" = 1'-0"

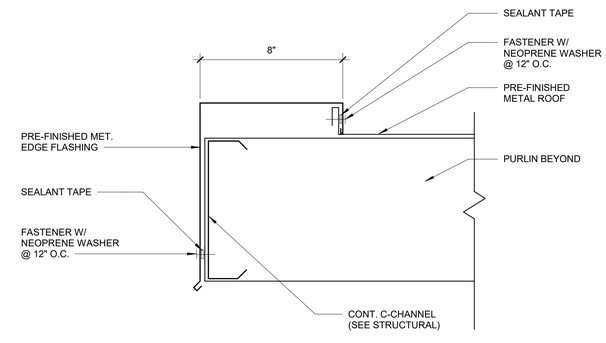

3 RAKE FLASHING DETAIL
SCALE: 3" = 1'-0"

Austin Tsutsumi & ASSOCIATES, INC.
CIVIL ENGINEERS | SURVEYORS
HONOLULU | WAILUKU | HILO, HAWAII

501 SUMNER STREET, SUITE 521
HONOLULU, HAWAII 96817

PHONE: 808-533-3646
FAX: 808-526-1267

STATE OF HAWAII
DEPARTMENT OF HAWAIIAN HOME LANDS

PULEHUNUI REGIONAL INFRASTRUCTURE

AUSTIN, TSUTSUMI & ASSOC., INC.
ENGINEERS, SURVEYORS · HONOLULU, HAWAII

ANN A. KUTAKA
LICENSED PROFESSIONAL ARCHITECT
No. 6239
HAWAII, U.S.A.

This work was prepared by me or under my supervision and construction of this project will be under my observation. (Observation of construction as defined in Chapter 16-115 Subchapter 1 Definitions of the Hawaii Administrative Rules "Professional Engineers, Architects, Surveyors, and Landscape Architects.")

APRIL 30, 2020
SIGNATURE EXP. DATE OF THE LICENSE

0 1 2
LINE IS 2 INCHES AT FULL SIZE
(If NOT 2-inches : Scale Accordingly)

REVISION	DATE	BRIEF	BY

Project No:	16-576
Scale:	AS NOTED
Date:	1/29/20
Designed By:	BHK
Drawn By:	BHK
Checked By:	

DETAILS & MATERIAL SCHEDULE

DWG. NO.

AB-4

SHEET 166 OF 200

FILE	POCKET	FOLDER	NO.

JOB NO. 0-11-056.004
C:\Users\dropes\Documents\19-000-00_Pulehunui_R20-C_Calo_IFD.rvt

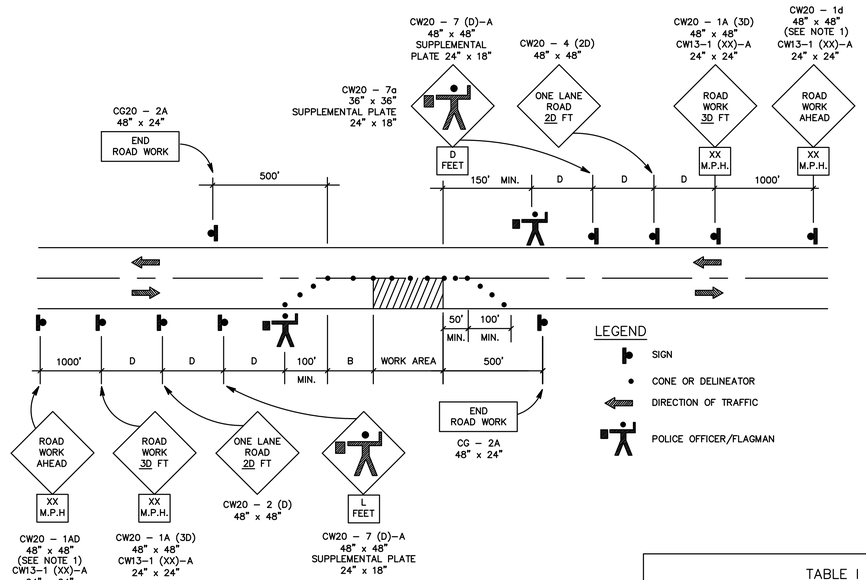

NOTES:

1. CW–20–1AD SIGN REQUIRED FOR POSTED SPEED LIMIT OF 45 M.P.H. OR GREATER.
2. SEE TABLE 1 FOR ADDITIONAL DIMENSIONS.
3. ONE LANE ROAD (CW–20–4) AND FLAGGER AHEAD (CW20–7) SIGNS SHALL BE REMOVED OR COVERED WHEN NO WORK IS BEING PREFORMED AND LANE IS NOT CLOSED.
4. THE ADVISORY SPEED (XX) SHALL BE DETERMINED BY THE ENGINEER.
5. CONES OR DELINEATORS SHALL BE INSTALLED AT 25' O.C. MAX. ON TAPERS.

TWO-LANE HIGHWAY - ONE LANE CLOSED
FIGURE I - TRAFFIC CONTROL PLAN

GENERAL NOTES:

1. PLANS SUBJECT TO REVIEW AND APPROVAL OF UTILITY COMPANIES.
2. THE CONTRACTOR/UTILITY COMPANY SHALL CONTACT THE DEPARTMENT OF WATER SUPPLY AT PHONE # 270–7340 ONE (1) WEEK PRIOR TO COMMENCEMENT OF WORK.
3. THE CONTRACTOR/UTILITY COMPANY SHALL BE RESPONSIBLE TO VERIFY THE EXACT DEPTH AND LOCATION OF EXISTING WATERLINES IN THE PROJECT AREA PRIOR TO COMMENCEMENT OF WORK AND SHALL MEET WITH THE DEPARTMENT OF WATER SUPPLY PERSONNEL OUT IN THE FIELD TO HELP LOCATE THE EXISTING WATERLINES IN THE PROJECT AREA IF NECESSARY.
4. MAINTAIN A MINIMUM OF THREE (3) FEET CLEAR HORIZONTAL SEPARATION BETWEEN EXISTING WATERLINES AND INSTALLED UTILITIES.
5. MAINTAIN A MINIMUM OF SIX (6) INCHES CLEAR VERTICAL SEPARATION BETWEEN EXISTING WATERLINES AND INSTALLED UTILITIES AT ALL CROSSINGS.
6. ANY INSTALLED UTILITY CROSSING AN EXISTING WATERLINE SHALL BE CONCRETE JACKETED A MINIMUM OF FIVE (5) FEET ON BOTH SIDES OF THE CROSSING.

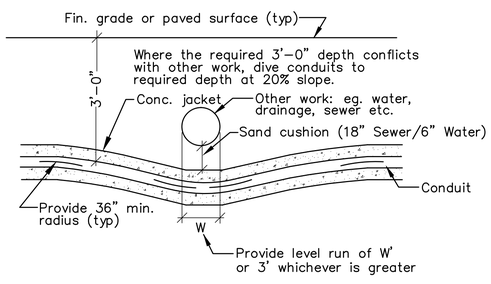

TYPICAL DUCTS CROSSING UNDER OTHER WORK
NOT TO SCALE

GENERAL NOTES FOR TRAFFIC CONTROL PLAN

1. THE PERMITTEE SHALL MAKE MINOR ADJUSTMENTS AT INTERSECTIONS, DRIVE–WAYS, BRIDGES, STRUCTURES, ETC., TO FIT FIELD CONDITIONS.
2. CONES OR DELINEATORS SHALL BE EXTENDED TO A POINT WHERE THEY ARE VISIBLE TO APPROACHING TRAFFIC.
3. TRAFFIC CONTROL DEVICES SHALL BE INSTALLED SUCH THAT THE SIGN OR DEVICE FARTHEST FROM THE WORK AREA SHALL BE PLACED FIRST. THE OTHERS SHALL THEN BE PLACED PROGRESSIVELY TOWARD THE WORK AREA.
4. REGULATORY AND WARNING SIGNS WITHIN THE CONSTRUCTION ZONE THAT ARE IN CONFLICT WITH THE TRAFFIC CONTROL PLANS SHALL BE REMOVED OR COVERED.
5. ALL SIGNS SHALL BE RESTORED UPON COMPLETION OF THE WORK.
6. FLAGGERS AND/OR POLICE OFFICERS SHALL BE IN SIGHT OF EACH OTHER OR IN DIRECT COMMUNICATIONS AT ALL TIMES.
7. WHEN REQUIRED BY THE ISSUING OFFICE, THE PERMITEE SHALL INSTALL A FLASHING ARROW SIGNAL AS SHOWN ON THE TRAFFIC CONTROL PLANS.
8. SIGNS SPACING (L), TAPER LENGTHS (T) AND SPACINGS OF CONES OR DELINEATORS SHALL BE AS SHOWN IN TABLE 1, UNLESS OTHERWISE NOTED ON THE TRAFFIC CONTROL PLANS.
9. ALL TRAFFIC LANES SHALL BE A MINIMUM OF 10 FEET WIDE.
10. ALL CONSTRUCTION WARNING SIGNS SHALL BE PROMPTLY REMOVED OR COVERED WHENEVER THE MESSAGE IS NOT APPLICABLE OR NOT IN USE.
11. THE BACKS OF ALL SIGNS USED FOR TRAFFIC CONTROL SHALL BE APPROPRIATELY COVERED TO PRECLUDE THE DISPLAY OF INAPPLICABLE SIGN MESSAGES (i.e. WHEN SIGNS HAVE MESSAGES ON BOTH FACES).
12. AT THE END OF EACH DAY'S WORK OR AS SOON AS THE WORK IS COMPLETED, THE PERMITTEE SHALL REMOVE ALL TRAFFICE CONTROL DEVICES NO LONGER NEEDED TO PERMIT FREE AND SAFE PASSAGE OF PUBLIC TRAFFIC. REMOVAL SHALL BE IN THE REVERSE ORDER OR INSTALLATION.
13. REPLACE PERMANENT PAVEMENT MARKINGS AND TRAFFIC SIGNS UPON COMPLETION OF WORK.

TABLE I FOR TRAFFIC CONTROL PLAN

POSTED SPEED LIMIT (M.P.H.)	SIGN SPACING (D) FEET	TAPER LENGTH (T) (FEET)		LONGITUDINAL BUFFER SPACE (B) (FEET)	SPACING OF CONES OR DELINEATORS (FEET)		
		W = 12' OR LESS ①	W = GREATER THAN 12' ①		TAPER	TANGENT	WORK AREA
20	250	200	W x 17	35	20	20	10
25	250	200	W x 17	55	25	25	10
30	250	250	W x 20	85	30	30	10
35	250	250	W x 20	120	35	35	10
40	500	350	W x 30	170	40	40	10
45	500	550	W x 45	220	45	45	10
50	1000	600	W x 50	280	50	50	10
55	1000	700	W x 55	335	55	55	10

NOTES:

① W = WIDTH OF LANE, SHOULDER, OR OFFSET

TRAFFIC CONTROL PLAN
NOT TO SCALE

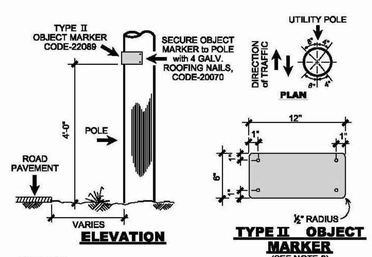

NOTES:

1. **THE TYPE II OBJECT MARKER (OM2-2H, 12"x6", per MUTCD 2003) shall be made of HIGH INTENSITY AMBER REFLECTIVE SHEETING MATERIAL OVERLAYED on 0.020" ALUMINUM SHEETING.**
2. **INSTALL TWO(2) OBJECT MARKERS: ONE ON EACH SIDE OF POLE FACING ONCOMING TRAFFIC AS SHOWN ON THIS PLAN VIEW.**

COUNTY REQUIRED TYPE II MARKER

CONTRUCTION NOTES WITHIN COUNTY RIGHT–OF–WAY

1. CONTRACTOR SHALL OBTAIN A PERMIT TO PERFORM WORK ON COUNTY HIGHWAYS FROM THE DEVELOPMENT SERVICES ADMINISTRATION TWO WEEKS PRIOR TO THE COMMENCEMENT OF WORK.
2. STANDARD DETAIL DRAWINGS AND STANDARD SPECIFICATIONS OF THE DEPARTMENT OF PUBLIC WORKS SHALL BE INCLUDED AS PART OF THE CONSTRUCTION PLANS.
3. ALL CONSTRUCTION WORK SHALL STRICTLY CONFORM TO THE LATEST VERSION OF THE HAWAII STANDARD SPECIFICATIONS FOR ROAD AND BRIDGE PUBLIC WORKS CONSTRUCTION, AND THE SEPTEMBER 1984 "STANDARD DETAILS" FOR PUBLIC WORKS CONSTRUCTION OF THE DEPARTMENT OF PUBLIC WORKS, AS AMENDED.
4. IF EXISTING UTILITIES, WHETHER OR NOT SHOWN ON PLANS, ARE DAMAGED DURING CONSTRUCTION, THE CONTRACTOR SHALL AT HIS OWN EXPENSE BE REQUIRED TO REPAIR SUCH UTILITIES.
5. CONTRACTOR SHALL PROVIDE, INSTALL AND MAINTAIN ALL NECESSARY SIGNS, LIGHTS, FLARES, BARRICADES, AND OTHER PROTECTIVE DEVICES FOR THE PROTECTION, SAFETY AND CONVENIENCE OF THE PUBLIC, ACCORDING TO THE LATEST VERSION OF THE "MANUAL ON UNIFORM TRAFFIC CONTROL DEVICE FOR STREETS AND HIGHWAYS", AND TO THE RULES AND REGULATIONS GOVERNING THE USE OF TRAFFIC CONTROL DEVICES AT WORKSITES AND/OR ADJACENT TO PUBLIC STREETS AND HIGHWAYS ADOPTED BY THE HIGHWAY SAFETY COORDINATOR AND THE U.S. FEDERAL HIGHWAY ADMINISTRATION "MANUAL ON UNIFORM TRAFFIC CONTROL DEVICES FOR HIGHWAY CONSTRUCTION AND MAINTENANCE OPERATIONS".
6. THE DIRECTOR PUBLIC WORKS AND/OR THE DIRECTOR OF THE DEPARTMENT OF WATER SUPPLY HAS THE RIGHT TO STOP CONSTRUCTION SHOULD ANY WORK BE FOUND CONTRARY TO THE APPROVED CONSTRUCTION PLAN OR DETRIMENTAL TO THE PUBLIC'S INTEREST.
7. THE CONTRACTOR SHALL SCHEDULE A PRE–CONSTRUCTION MEETING WITH THE DEVELOPMENT SERVICES ADMINISTRATION FIVE (5) DAYS PRIOR TO COMMENCEMENT OF CONSTRUCTION.
8. THE CONTRACTOR SHALL, AT HIS OWN EXPENSE, KEEP THE PROJECT AREA AND SURROUNDING AREA FREE FROM DUST NUISANCE. THE WORK SHALL BE IN CONFORMANCE WITH AIR POLLUTION CONTROL STANDARDS AND REGULATIONS OF THE STATE DEPARTMENT OF HEALTH AND COUNTY GRADING ORDINANCE.
9. THE CONTRACTOR SHALL REMOVE ALL SILT AND DEBRIS RESULTING FROM HIS WORK AND DEPOSITED IN DRAINAGE FACILITIES, ROADWAYS AND OTHER AREAS. THE COST INCURRED FOR ANY NECESSARY REMEDIAL ACTION ORDERED BY THE DIRECTOR OF PUBLIC WORKS SHALL BE PAID BY THE CONTRACTOR.
10. CONSTRUCTION DEBRIS AND WASTES SHALL BE DEPOSITED AT AN APPROPRIATE WORK SITE. THE CONTRACTOR SHALL INFORM THE DIRECTOR OF PUBLIC WORKS OF THE LOCATION OF THE DISPOSAL SITES. THE DISPOSAL SITE MUST FULFILL THE REQUIREMENTS OF THE GRADING ORDINANCE.
11. THE CONTRACTOR SHALL SUBMIT A TIFF AND FIVE (5) COPIES OF THE "AS–BUILT" DRAWINGS PRIOR TO THE FINAL APPROVAL OF THE IMPROVEMENTS.
12. IF THE CLEARANCE BETWEEN A WASTEWATER LINE AND A NEW OR EXISTING WATERLINE IS EIGHTEEN INCHES (18") OR LESS, THE WASTEWATER LINE SHALL BE CONCRETE–JACKETED IN ACCORDANCE WITH THE STANDARD DETAILS OF PUBLIC WORKS CONSTRUCTION DATED SEPTEMBER 1984, AS AMENDED.
13. SHOULD HISTORIC SITES SUCH AS WALLS, PLATFORMS, PAVEMENTS, OR MOUNDS, OR REMAINS SUCH AS ARTIFACTS BURIALS, CONCENTRATION OF SHELL OR CHARCOAL BE ENCOUNTERED DURING CONSTRUCTION ACTIVITIES, WORK SHALL CEASE IMMEDIATELY IN THE IMMEDIATE VICINITY OF THE FIND AND THE FIND SHALL BE PROTECTED FROM FURTHER DAMAGE. THE CONTRACTOR AND/OR LANDOWNER SHALL IMMEDIATELY CONTACT THE STATE HISTORIC PRESERVATION DIVISION (692–8015), WHICH WILL ASSESS THE SIGNIFICANCE OF THE FIND AND RECOMMEND AN APPROPRIATE MITIGATION MEASURE, IF NECESSARY.
14. PURSUANT OF MAUI COUNTY CODE SECTION 3.44.015(C), THE COUNTY OF MAUI IS NOT RESPONSIBLE FOR ANY PARK, ROADWAY, EASEMENT (INCLUDING BUT NOT LIMITED TO DRAINAGE, SEWER, ACCESS, RECLAIMED WATER, OR AVIGATION EASEMENT), OR ANY OTHER INTEREST IN REAL PROPERTY SHOWN ON THIS MAP OR SHOWN ON THESE PLANS, UNLESS THE MAUI COUNTY COUNCIL HAS ACCEPTED ITS DEDICATION BY A RESOLUTION APPROVED BY A MAJORITY OF COUNCIL'S MEMBERS AT A REGULAR OR SPECIAL MEETING OF THE MAUI COUNTY COUNCIL.
15. STEEL PLATE WARNING SIGNS ARE REQUIRED FOR ALL STEEL PLATES IN THE RIGHT–OF–WAY.
16. WHEELCHAIR RAMP INSPECTION/CERTIFICATION FORMS SHALL BE REQUIRED FOR ALL NEWLY CONSTRUCTED RAMPS.
17. ALL STRIPING AND PAVEMENT MARKINGS SHALL BE OF THERMOPLASTIC MATERIAL.
18. COMPACTION REQUIREMENTS
    a. TESTING OF MATERIALS SHALL BE CONDUCTED BY AN APPROVED INDEPENDENT TESTING AGENCY IN ACCORDANCE WITH ASTM STANDARD METHODS OR AS SPECIFIED BY THE DEPARTMENT OF PUBLIC WORKS, ENGINEERING DIVISION, AS FOLLOWS:
       i. EMBANKMENT/SELECT BORROW AND SUBGRADE MATERIALS: ONE (1) COMPACTION TEST PER 600 SQUARE YARDS PER LIFT;
       ii. AGGREGATE SUBBASE COURSE: ONE (1) COMPACTION TEST PER 400 SQUARE YARDS; ONE (1) GRADATION AND SAND EQUIVALENT TEST PER LIFT PER PROJECT;
       iii. AGGREGATE BASE COURSE: ONE (1) COMPACTION TEST PER 300 SQUARE YARDS; ONE (1) GRADATION AND SAND EQUIVALENT TEST PER LIFT PER PROJECT;
       iv. ASPHALT CONCRETE PAVEMENT OR ASPHALT TREATED BASE COURSE; THREE (3) A.C. CORES FOR THICKNESS AN DENSITY TESTS PER PROJECT;
       v. TRENCH BACKFILL MATERIAL: ONE (1) TEST FOR EACH 300 LINEAL FEET OF TRENCH PER LIFT OF MATERIAL.
    b. CONTRACTOR SHALL SUBMIT ALL TESTING REPORTS INCLUDING RESULTS TO THE COUNTY'S INSPECTION AGENCY FOR REVIEW AND APPROVAL PRIOR TO COUNTY'S ACCEPTANCE OF WORK.
    c. THE CONTRACTOR SHALL BE REQUIRED TO NOTIFY THE COUNTY OF ANY TESTING FAILURES AND CORRECT EACH FAILURE PRIOR TO PROCEEDING TO THE NEXT PHASE OF CONSTRUCTION.

DEPARTMENT OF WATER SUPPLY NOTES:

1. THE CONTRACTOR SHALL CONTACT THE DWS (PH# 243-7633) PRIOR TO COMMENCEMENT OF WORK.
2. THE CONTRACTOR SHALL CONTACT THE DWS FOR THE EXACT DEPTH AND LOCATION OF EXISTING WATERLINES. SERVICE LATERALS, AND APPURTENANCES TO BE DETERMINED IN THE FIELD.
3. IT SHALL BE THE CONTRACTOR'S RESPONSIBILITY TO LOCATE SAME (ITEM #2) PRIOR TO TRENCHING. FACILITIES DAMAGED BY THE CONTRACTOR'S OPERATION SHALL BE REPAIRED IMMEDIATELY BY THE CONTRACTOR AT HIS/HER EXPENSE.
4. KEEP 3 FEET MINIMUM HORIZONTAL CLEARENCE AND / OR 6 INCH MINIMUM VERTICAL CLEARANCE BETWEEN EXISTING WATER SYSTEM IMPROVEMENTS AND ELECTRICAL UTILITIES.
5. ANY ELECTRICAL CONDUIT, WHEN INDEPENDENTLY INSTALLED AND CROSSING AN EXISTING WATERLINE, GAS, OIL, OR OTHER PIPE SYSTEMS, SHALL BE CONCRETE JACKETED 5 FEET OF BOTH SIDES OF CROSSING IF IT IS SEPARATED BY LESS THAN 6 INCHES.

APPROVALS:

DIRECTOR – DEPARTMENT OF PUBLIC WORKS (APPROVAL FOR WORK WITHIN COUNTY RIGHT OF WAY ONLY) — DATE

DIRECTOR – DEPARTMENT OF ENVIRONMENTAL MANAGEMENT (APPROVAL FOR WORK WITHIN COUNTY RIGHT OF WAY ONLY) — DATE

DIRECTOR – DEPARTMENT OF WATER SUPPLY. COUNTY OF MAUI (APPROVAL LIMITED TO WATER IMPROVEMENTS WHICH WILL BE DEDICATED TO THE DEPARTMENT OF WATER SUPPLY) — DATE

AustinTsutsumi & ASSOCIATES, INC.
CIVIL ENGINEERS I SURVEYORS
HONOLULU I WAILUKU I HILO, HAWAII
501 SUMNER STREET, SUITE 521
HONOLULU, HAWAII 96817
PHONE: 808-533-3646
FAX: 808-526-1267

STATE OF HAWAII
DEPARTMENT OF
HAWAIIAN HOME LANDS

PULEHUNUI
REGIONAL
INFRASTRUCTURE

AUSTIN, TSUTSUMI & ASSOC., INC.
ENGINEERS, SUVEYORS • HONOLULU, HAWAII

MARK P. RICKARD
LICENSED PROFESSIONAL ENGINEER
No. 8991–E
HAWAII, U.S.A.

This work was prepared by me or under my supervision and construction of this project will be under my observation. (Observation of construction as defined in Chapter 16-115 Subchapter 1 Definitions of the Hawaii Administrative Rules "Professional Engineers, Architects, Surveyors, and Landscape Architects.")

SIGNATURE — APRIL 30, 2020 EXP. DATE OF THE LICENSE

0 1 2
LINE IS 2 INCHES AT FULL SIZE
(IF NOT 2–inches : Scale Accordingly)

REVISION	DATE	BRIEF	BY

Project No:	16-576
Scale:	AS NOTED
Date:	1/22/19
Designed By:	MPR
Drawn By:	AKK
Checked By:	MPR

PHASE A1 – DHHL
NORTH PUMP
STAION
NOTES & DETAILS

DWG. NO.
EA1-1
SHEET OF XX

FILE	POCKET	FOLDER	NO.

JOB NO. 0–11–056.004
FN: H:\ACAD2\2019–60 PULEHUNUI NORTH AND SOUTH PUMP STATIONS\NORTH PUMP STATION\E–0.DWG

SYMBOL LEGEND

- NEW 3Ø PRIMARY OVERHEAD LINE
- EXISTING OVERHEAD LINE
- NEW POLE MOUNTED TRANSFORMER BANK (3PH)
- EXISTING UTILITY POLE
- NEW UTILITY POLE
- EXISTING UTILITY ANCHOR
- NEW UTILITY ANCHOR
- NEW DUCTS
- T — TELEPHONE DUCTS, QTY. AND SIZE AS INDICATED
- ES — ELECTRICAL DUCTS, QTY AND SIZE AS INDICATED
- NEW METERING EQUIPMENT (SEE SHEET E-4)

GENERAL NOTES:

1. PLANS SUBJECT TO REVIEW AND APPROVAL OF UTILITY COMPANIES.
2. ALL NEW POLE & ANCHOR LOCATIONS ARE TO BE STAKED OUT BY THE DEVELOPER'S SURVEYOR. COORDINATION REQUIRED WITH MECO'S ASSIGNED PLANNER.
3. DEVELOPER SHALL BE RESPONSIBLE FOR THE FULL COST TO RELOCATE MECO FACILITIES IF REQUIRED TO ADEQUATELY CLEAR ALL DRIVEWAYS & THEIR RESPECTIVE APPROACHES WHICH ARE NOT INDICATED ON THIS PLAN.
4. THE UTILITY COMPANY SHALL BE RESPONSIBLE TO VERIFY THE EXACT DEPTH AND LOCATION OF EXISTING WATERLINES IN THE PROJECT AREA PRIOR TO COMMENCEMENT OF WORK AND SHALL MEET WITH THE DEPARTMENT OF WATER SUPPLY PERSONNEL OUT IN THE FIELD TO HELP LOCATE THE EXISTING WATERLINES IN THE PROJECT AREA IF NECESSARY.
5. THE DEVELOPER OR ITS CONTRACTOR WILL BE RESPONSIBLE IN SUBMITTING LANDSCAPE PLANS IN THE PROXIMITY OF THE PROPOSED ELECTRICAL INFRASTRUCTURES AND/OR FACILITIES TO MECO-ENGINEERING FOR ITS REVIEW PRIOR TO THEIR ACCEPTANCE OF SAID INFRASTRUCTURES AND/OR FACILITIES.

PLAN NOTES:

1. EASEMENT REQUIRED FOR FACILITIES LOCATED IN PRIVATE PROPERTY (REFER TO MECO DWG.).
2. NEW UTILITY POLE.
3. NEW UTILITY RISERS.
4. NEW OVERHEAD UTILITY LINE EXTENSION.
5. EXISTING UTILITY POLES.

N

LOCATION MAP
NOT TO SCALE

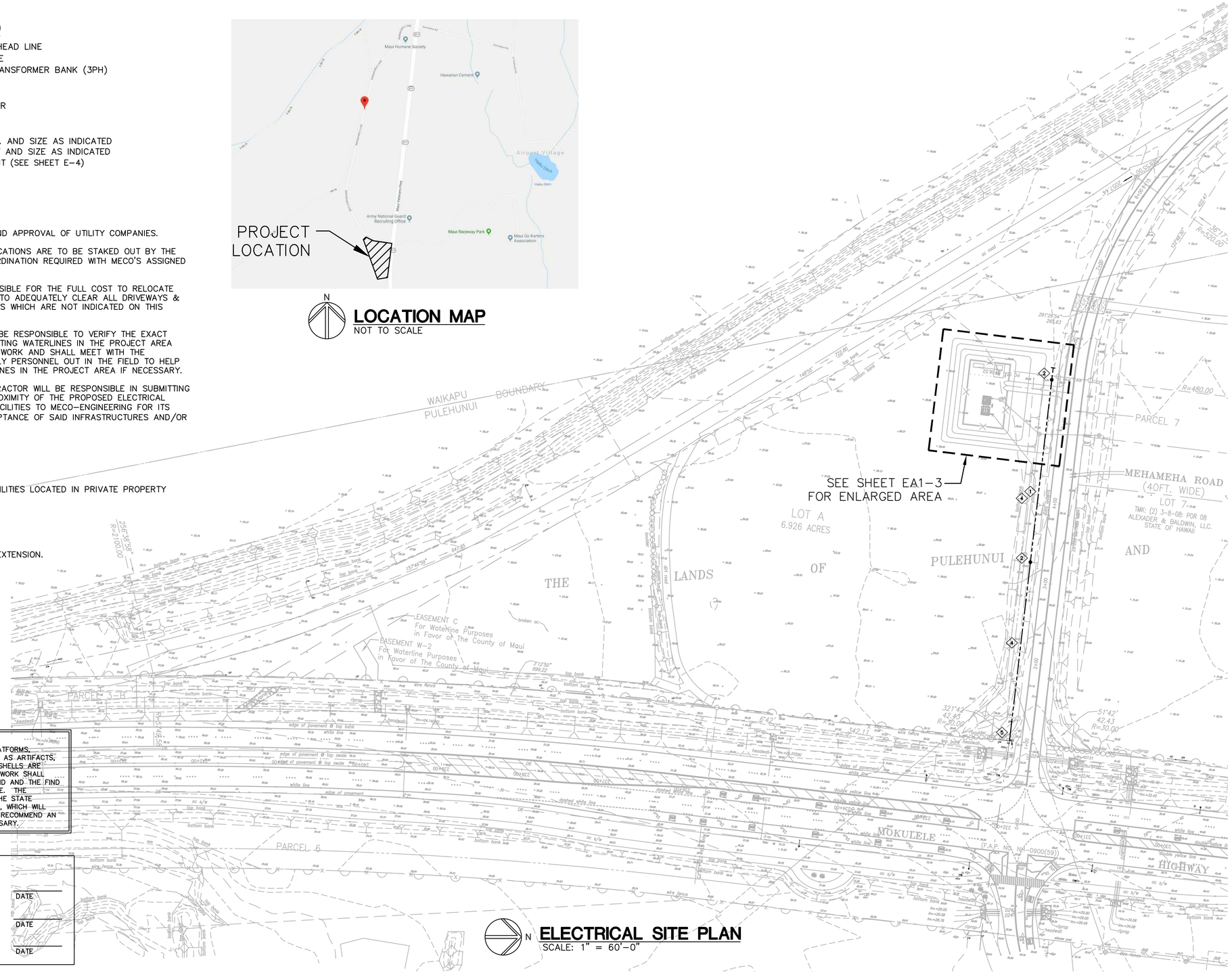

N

ELECTRICAL SITE PLAN
SCALE: 1" = 60'-0"

NOTE:
SHOULD HISTORIC SITES SUCH AS WALLS, PLATFORMS, PAVEMENTS AND MOUNDS, OR REMAINS SUCH AS ARTIFACTS, BURIALS, CONCENTRATION OF CHARCOAL OR SHELLS ARE ENCOUNTERED DURING CONSTRUCTION WORK, WORK SHALL CEASE IN THE IMMEDIATE VICINITY OF THE FIND AND THE FIND SHALL BE PROTECTED FROM FURTHER DAMAGE. THE CONTRACTOR SHALL IMMEDIATELY CONTACT THE STATE HISTORIC PRESERVATION DIVISION (692-8023), WHICH WILL ASSESS THE SIGNIFICANCE OF THE FIND AND RECOMMEND AN APPROPRIATE MITIGATION MEASURE, IF NECESSARY.

APPROVALS:

MAUI ELECTRIC COMPANY	DATE
HAWAIIAN TELCOM	DATE
SPECTRUM	DATE

NOTE: PLAN NOT FOR CONSTRUCTION UNLESS APPROVED

JOB NO. O-11-056.004
FN: H:\ACAD2\2019-60 PULEHUNUI NORTH AND SOUTH PUMP STATIONS\NORTH PUMP STATION\E-1.DWG

AustinTsutsumi & ASSOCIATES, INC.
CIVIL ENGINEERS I SURVEYORS
HONOLULU I WAILUKU I HILO, HAWAII
501 SUMNER STREET, SUITE 521
HONOLULU, HAWAII 96817
PHONE: 808-533-3646
FAX: 808-526-1267

STATE OF HAWAII
DEPARTMENT OF
HAWAIIAN HOME LANDS

PULEHUNUI
REGIONAL
INFRASTRUCTURE

AUSTIN, TSUTSUMI & ASSOC., INC.
ENGINEERS, SUVEYORS • HONOLULU, HAWAII

MARK P. RICKARD
LICENSED PROFESSIONAL ENGINEER
No. 8991-E
HAWAII, U.S.A.

This work was prepared by me or under my supervision and construction of this project will be under my observation. (Observation of construction as defined in Chapter 16-115 Subchapter 1 Definitions of the Hawaii Administrative Rules "Professional Engineers, Architects, Surveyors, and Landscape Architects.")

SIGNATURE — APRIL 30, 2020 EXP. DATE OF THE LICENSE

0 1 2
LINE IS 2 INCHES AT FULL SIZE
(if NOT 2-inches : Scale Accordingly)

REVISION	DATE	BRIEF	BY

Project No:	16-576
Scale:	AS NOTED
Date:	1/22/19
Designed By:	MPR
Drawn By:	AKK
Checked By:	MPR

NORTH PUMP STATION
ELECTRICAL SITE PLAN,
SYMBOL LEGEND,
NOTES

DWG. NO.
EA1-2
SHEET OF XX

FILE	POCKET	FOLDER	NO.

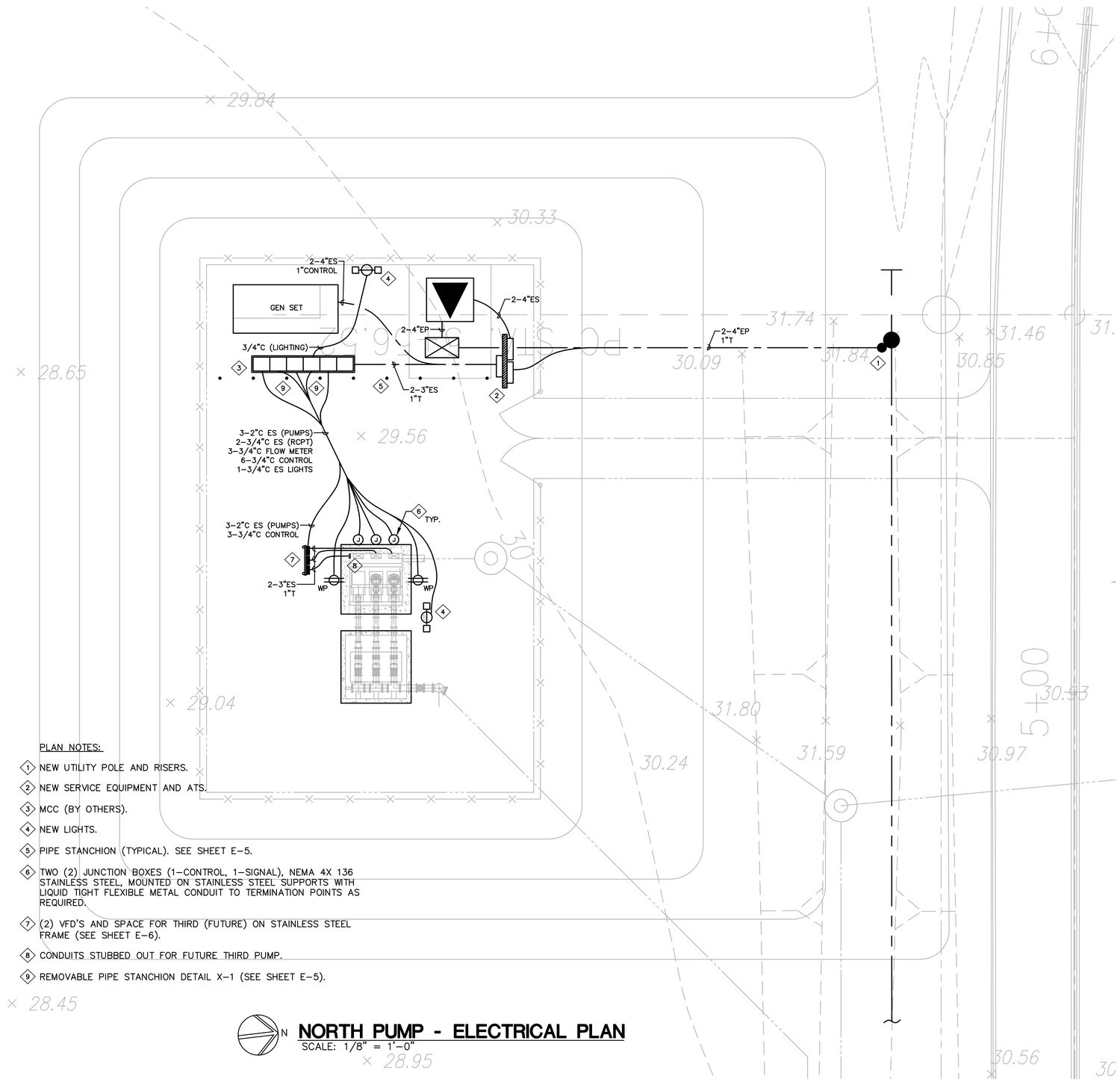

PLAN NOTES:

1. NEW UTILITY POLE AND RISERS.
2. NEW SERVICE EQUIPMENT AND ATS.
3. MCC (BY OTHERS).
4. NEW LIGHTS.
5. PIPE STANCHION (TYPICAL). SEE SHEET E-5.
6. TWO (2) JUNCTION BOXES (1-CONTROL, 1-SIGNAL), NEMA 4X 136 STAINLESS STEEL, MOUNTED ON STAINLESS STEEL SUPPORTS WITH LIQUID TIGHT FLEXIBLE METAL CONDUIT TO TERMINATION POINTS AS REQUIRED.
7. (2) VFD'S AND SPACE FOR THIRD (FUTURE) ON STAINLESS STEEL FRAME (SEE SHEET E-6).
8. CONDUITS STUBBED OUT FOR FUTURE THIRD PUMP.
9. REMOVABLE PIPE STANCHION DETAIL X-1 (SEE SHEET E-5).

N

NORTH PUMP - ELECTRICAL PLAN

SCALE: 1/8" = 1'-0"

COUNTY OF MAUI
MAUI COUNTY CODE, CHAPTER 16.16B ENERGY CODE
(2015 IECC) COMMERCIAL PROVISIONS

COMPLIANCE METHOD
Check applicable method

☐	C401.2(1) ANSI/ASHRAE/IESNA 90.1
X	C401.2(2) Section C405
☐	C401.2(3) Sections C405.2, 405.3, C405.4, C405.6 & C407
☐	C102.1 Alternative

To the best of my knowledge, this project's design substantially conforms to the Energy Code.

Signature: _____ Date: _____
Name: MARK P. RICKARD
Title: PROJECT ENGINEER
License No.: 8891-E

MAUI COUNTY CODE CHAPTER 20.35
OUTDOOR LIGHTING

THE ELECTRICAL OUTDOOR LIGHTING SYSTEM AND EQUIPMENT HAVE BEEN REVIEWED BY ME AN TO THE BEST OF MY KNOWLEDGE, THIS DESIGN SUBSTANTIALLY CONFORMS TO THE REQUIREMENTS SPECIFIED IN MAUI COUNTY CODE CHAPTER 20.35 OUTDOOR LIGHTING.

SIGNATURE	PROJECT ENGINEER TITLE
MARK P. RICKARD NAME (PRINT)	8991-E STATE OF HAWAII P.E. LICENSE NUMBER

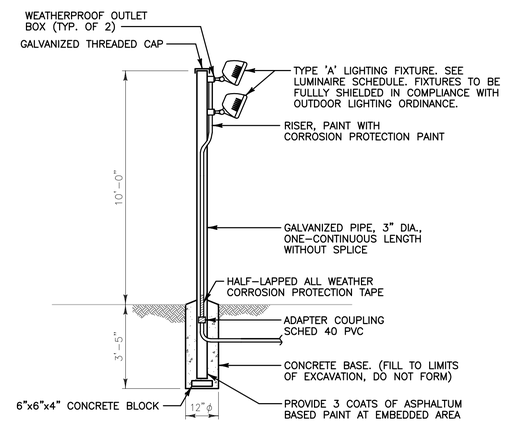

FLOODLIGHT DETAIL

NOT TO SCALE

AustinTsutsumi
& ASSOCIATES, INC.
CIVIL ENGINEERS I SURVEYORS
HONOLULU I WAILUKU I HILO, HAWAII

501 SUMNER STREET, SUITE 521
HONOLULU, HAWAII 96817

PHONE: 808-533-3646
FAX: 808-526-1267

STATE OF HAWAII
DEPARTMENT OF
HAWAIIAN HOME LANDS

PULEHUNUI
REGIONAL
INFRASTRUCTURE

AUSTIN, TSUTSUMI & ASSOC., INC.
ENGINEERS, SUVEYORS • HONOLULU, HAWAII

MARK P. RICKARD
LICENSED PROFESSIONAL ENGINEER
No. 8991-E
HAWAII, U.S.A.

This work was prepared by me or under my supervision and construction of this project will be under my observation. (Observation of construction as defined in Chapter 16-115 Subchapter 1 Definitions of the Hawaii Administrative Rules "Professional Engineers, Architects, Surveyors, and Landscape Architects.")

SIGNATURE — APRIL 30, 2020 EXP. DATE OF THE LICENSE

0 1 2
LINE IS 2 INCHES AT FULL SIZE
(If NOT 2-inches : Scale Accordingly)

REVISION	DATE	BRIEF	BY

Project No:	16-576
Scale:	AS NOTED
Date:	1/22/19
Designed By:	MPR
Drawn By:	AKK
Checked By:	MPR

NORTH PUMP STATION
ELECTRICAL PLAN

DWG. NO.
EA1-3
SHEET OF XX

FILE	POCKET	FOLDER	NO.

JOB NO. C-11-056.004
FN: H:\ACAD2\2019-60 PULEHUNUI NORTH AND SOUTH PUMP STATIONS\NORTH PUMP STATION\E-2.DWG

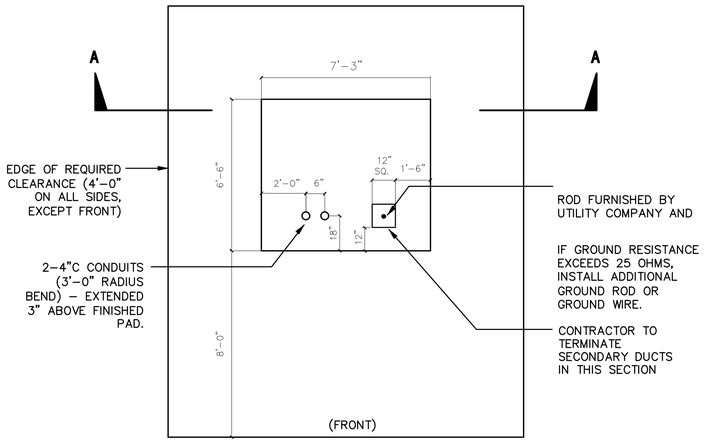

PLAN VIEW

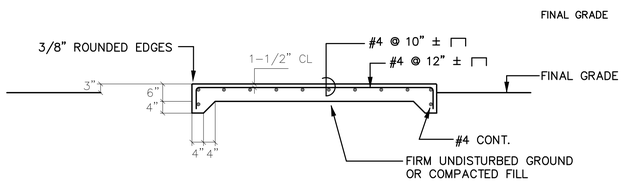

SECTION "A-A"

THREE PHASE TRANSFORMER PAD

NOT TO SCALE

CONTRACTOR NOTES:

1. THE CONTRACTOR IS TO FURNISH MATERIALS AND CONSTRUCT THE FACILITIES FOR THE PADMOUNT TRANSFORMER INCLUDING THE CONCRETE PAD. PRIMARY AND SECONDARY DUCTS AND ANCHOR BOLTS. CONCRETE CURB AND ROCK FILL AROUND THE PAD, WHEN REQUIRED, SHALL ALSO BE FURNISHED AND INSTALLED BY THE CONTRACTOR.
2. MECO SHALL HAVE 24-HOUR ACCESS TO THE TRANSFORMER WITHOUT GOING THROUGH LOCKED AREAS.
3. MECO SHALL HAVE A MINIMUM OF 10 FEET WIDE VEHICULAR ACCESS TO THE TRANSFORMER INSTALLATION.
4. BENDS DUE TO CHANGES OF GRADE ARE TO HAVE MINIMUM RADIUS OF 20 FEET. THE DUCT IS TO BE PVC SCHEDULE 40 PIPE. THE CONTRACTOR IS TO INSTALL DUCT FROM THE PAD TO THE RISER POLE OR HANDHOLE AS DESIGNATED ON THE PLAN.
5. ONE COPPER WELD GROUND ROD 5/8 INCH DIAM. X 8 FEET LONG IS TO BE PROVIDED AND INSTALLED BY THE CONTRACTOR. THE ROD IS TO EXTEND 6 INCHES ABOVE THE FINISHED PAD. TIE THE ROD TO A WATER PIPE WITH #1/0 COPPER WIRE. THIS TIE MAY BE ELIMINATED WHERE THE WATER PIPE IS MORE THAN 25 FEET AWAY.
6. NO PERMANENT OR TEMPORARY STRUCTURE OR OBJECT SHALL BE ERECTED OR PLACED WITHIN FOUR FEET OF THE EDGE OF THE CONCRETE TRANSFORMER PAD AND 8 FEET IN FRONT, UNLESS APPROVED BY MECO.
7. WHEN THE CONCRETE PAD IS LOCATED IN THE VICINITY OF EXISTING OR FUTURE COMBUSTIBLE MATERIAL, COMBUSTIBLE BUILDINGS, THE CONTRACTOR SHALL PROVIDE SAFEGUARDS A OUTLINED IN THE NEC LATEST REVISION SUBJECT TO THE APPROVAL OF THE CITY & COUNTY BUILDING INSPECTORS.
8. THE FRONT SIDE OF THE CONCRETE PAD SHALL ALWAYS BE LOCATED TO FACE THE VEHICULAR ACCESS AND SHALL BE FREE OF ANY OBSTRUCTIONS AT ALL TIMES.
9. WHEN PARTS OF BUILDING STRUCTURES ARE LOCATED DIRECTLY OVER THE CONCRETE PAD, A MINIMUM CLEARANCE OF 9 FEET FROM THE PAD GRADE IS REQUIRED. THE CUSTOMER SHALL PROVIDE ADEQUATE SAFEGUARDS AS OUTLINED IN THE NEC, LATEST REVISION, AND IS SUBJECT TO APPROVAL OF THE CITY & COUNTY BUILDING INSPECTORS.
10. ALL DUCTLINES SHALL CONTAIN A "MULE TAPE" PULL LINE (WESCO CAT. #072592000 OR EQUIVALENT).
11. AFTER THE CONDUITS ARE INSTALLED, THE CONTRACTOR SHALL PASS A SMOOTH BULLET-SHAPED WOODEN TEST MANDREL THROUGH THE ENTIRE LENGTH OF EACH CONDUIT TO TEST FRO FREEDOM OF BURRS AND OBSTRUCTIONS.
12. A UTILITY STAND-BY MAN IS REQUIRED TO BE AT THE SITE AT THE TIME ANY NON-UTILITY CO. PERSONNEL WILL BE BREAKING INTO OR ENTERING ANY FACILITIES THAT CONTAIN ENERGIZED UTILITY EQUIPMENT OR CABLES. CALL MECO - PHONE 871-777.

LOAD CALCULATIONS:

SERVICE: 480/277V, 3 PHASE, 4 WIRE

PUMPS (3-160HP) 1 @ 125% & 2 @ 100%	=	617.5 KVA
MISC. LIGHTS/RCPT.	=	10 KVA
TOTAL LOAD	=	627.5 KVA
	=	754.7 AMPS @ 480V, 3PH

PANEL A (IN MCC)

A.I.C. RATING: 10K

VOLTAGE: 120/240V PHASE: 1 WIRE: 3WSN CIRCUITS: 18

MOUNTING: SURFACE MAIN BRKR: 2P30 BREAKER: BOLT ON MAIN BUS: 30A

CKT	DESCRIPTION	PHASE A	PHASE B	BRKR	WIRE	CKT	DESCRIPTION	PHASE A	PHASE B	BRKR	WIRE
1	L: ENCL/EXT LIGHTS	0.6		1P20	#12	2	SPARE			1P20	
3	R: RECEPTACLE		0.2	1P20	#12	4	SPARE			1P20	
5	SCADA	1.0		1P20	#12	6	SPARE			1P20	
7	HEATER - MCC		0.4	1P20	#12	8	PFB				
9	FANS	0.1		1P20	#12	10	PFB				
11	HEATER - PUMPS		0.5	1P20	#12	12	PFB				
13	R: SCADA RCPT	0.2		1P20	#12	14	PFB				
15	R: SCADA RCPT		0.2	1P20	#12	16	PFB				
17	R: PUMP RCPT	0.2		1P20	#12	18	PFB				
	TOTALS	2.1	1.1				TOTALS	0.0	0.0		

TOTAL CONNECTED LOAD: 3.2 KVA
ESTIMATED DEMAND: 1.0
TOTAL EST. DEMAND LOAD: 3.2 KVA 13 A @ V =240V

R: DENOTES RECEPTACLE LOAD
L: DENOTES LIGHTING LOAD

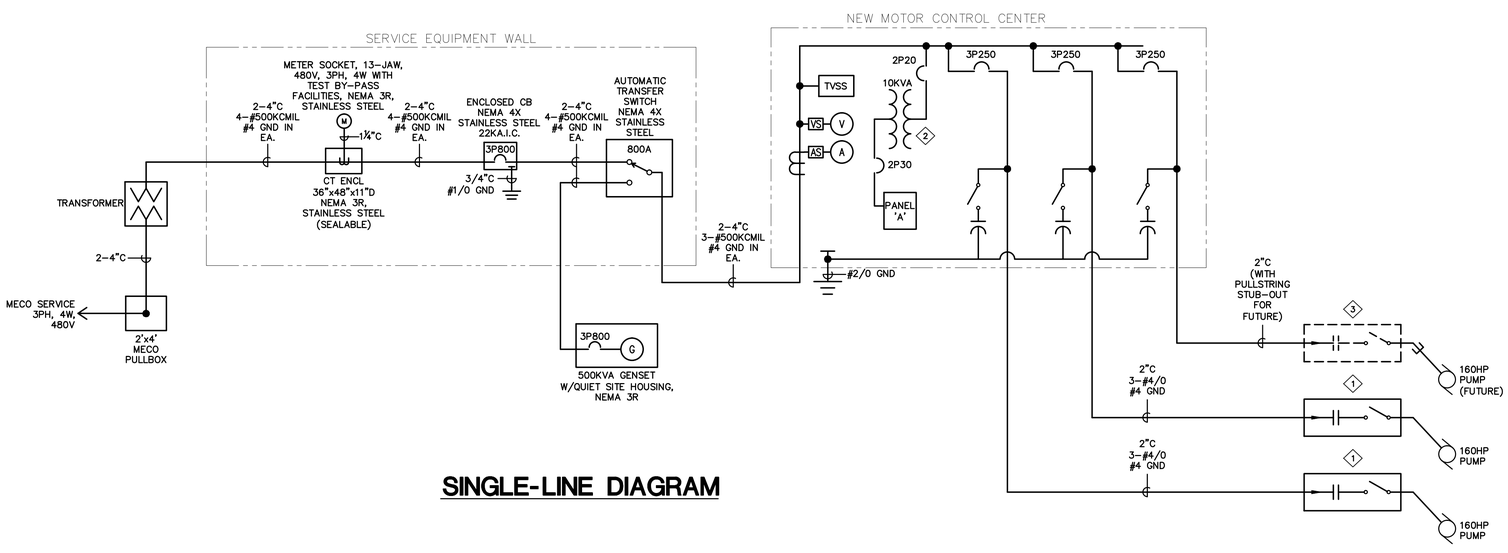

SINGLE-LINE DIAGRAM

GENERAL NOTES:

1. ALL EQUIPMENT TO BE NEMA 4X.
2. ALL EQUIPMENT SHALL BE CAPABLE OF BEING LOCKED OUT AND TAGGED OUT.
3. ALL EQUIPMENT SHALL BE SQUARE D OR CUTLER HAMMER

NOTES:

1. VFD MOTOR STARTER WITH DISCONNECT, PROVIDED BY PUMP SUPPLIER).
2. 10 KVA MINI POWER ZONE TRANSFORMER AND INTERGRAL PANEL. 480V PRI, 120/240V SECONDARY, 1 PHASE, 3 WIRE, 10 SPACE PANEL, NEMA 3R (SQUARE D MPZ 10S40F).
3. FUTURE VFD.

AustinTsutsumi & ASSOCIATES, INC.
CIVIL ENGINEERS I SURVEYORS
HONOLULU I WAILUKU I HILO, HAWAII
501 SUMNER STREET, SUITE 521
HONOLULU, HAWAII 96817
PHONE: 808-533-3646
FAX: 808-526-1267

STATE OF HAWAII
DEPARTMENT OF
HAWAIIAN HOME LANDS

PULEHUNUI
REGIONAL
INFRASTRUCTURE

AUSTIN, TSUTSUMI & ASSOC., INC.
ENGINEERS, SUVEYORS • HONOLULU, HAWAII

MARK P. RICKARD
LICENSED PROFESSIONAL ENGINEER
No. 8991-E
HAWAII, U.S.A.

This work was prepared by me or under my supervision and construction of this project will be under my observation. (Observation of construction as defined in Chapter 16-115 Subchapter 1 Definitions of the Hawaii Administrative Rules "Professional Engineers, Architects, Surveyors, and Landscape Architects.")

SIGNATURE APRIL 30, 2020
EXP. DATE OF THE LICENSE

0 1 2
LINE IS 2 INCHES AT FULL SIZE
(If NOT 2-inches : Scale Accordingly)

REVISION	DATE	BRIEF	BY

Project No:	16-576
Scale:	AS NOTED
Date:	1/22/19
Designed By:	MPR
Drawn By:	AKK
Checked By:	MPR

NORTH PUMP STATION DETAILS

DWG. NO.
EA1-4
SHEET OF XX

FILE	POCKET	FOLDER	NO.

JOB NO. O-11-056.004
FN: H:\ACAD2\2019-60 PULEHUNUI NORTH AND SOUTH PUMP STATIONS\NORTH PUMP STATION\E-3.DWG

DUCTLINE NOTES

1. REFER TO ELECTRICAL PLAN FOR DUCT SIZES AND QUANTITIES.
2. DIRECT BURIED AND CONCRETE ENCASED ELECTRICAL AND CONDUITS SHALL BE PVC SCHEDULE 40 CONDUITS.
3. DIRECT BURIED CONDUITS OF LIKE USE SHALL BE SEPARATED BY A MINIMUM OF 3". A MINIMUM SEPARATION OF 12" MUST BE MAINTAINED BETWEEN ELECTRICAL CONDUITS AND TELEMETRY CONDUITS.

   CONCRETE ENCASED CONDUITS OF LIKE USE MAY BE SEPARATED BY 1-1/2". CONDUITS OF UNLIKE USES MUST BE SEPARATED BY 3".
4. CONTRACTOR SHALL COORDINATE DUCTLINE AND TRENCHING DETAILS WITH UTILITY COMPANIES.
5. UPON COMPLETION OF ALL DUCTLINES, THE CONTRACTOR SHALL PASS A BULLET SHAPED, WOODEN TEST MANDREL 1/2" SMALLER IN DIAMETER THAN THE CONDUITS, THROUGH THE ENTIRE LENGTH OF EACH DUCT SECTION TO TEST FOR FREEDOM OF BURRS AND OBSTRUCTIONS. THE CONTRACTOR SHALL REMOVE ALL BURRS, OBSTRUCTION AND FOREIGN MATTER TO THE SATISFACTION OF THE UTILITY COMPANIES' INSPECTORS.

   UPON COMPLETION OF THE TELEMETRY DUCTLINE, THE CONTRACTOR SHALL PASS A BLOCKED SHAPED, WOODEN TEST MANDREL, 12" LONG AND 1/4" SMALLER IN DIAMETER THAN THE CONDUIT THROUGH THE ENTIRE LENGTH OF EACH DUCT SECTION. THE DUCTS SHALL BE SWABBED AND CLEARED OF ALL BURRS, OBSTRUCTIONS AND FOREIGN MATERIAL.
6. THE UTILITY COMPANIES' INSPECTORS SHALL INSPECT THE UNDERGROUND DUCTLINES AND STRUCTURES PRIOR TO AND DURING ALL CONCRETE POUR AND BACKFILL OPERATIONS.
7. ALL HORIZONTAL AND VERTICAL BENDS SHALL HAVE A MINIMUM RADIUS OF 20'-0".
8. CONCRETE COMPRESS STRENGTH SHALL BE 3,000 PSI IN 28 DAYS.
9. THE CONTRACTOR SHALL INSTALL A WARNING TAPE OVER DUCTLINE AS SHOWN THE TAPE SHALL BE 4" WIDE AND 8 MILS THICK, YELLOW IN COLOR WITH BLACK IMPRINTED WARNING MESSAGE.

GENERAL NOTES:

1. PROVIDE A COMPLETE AND OPERATING ELECTRICAL SYSTEM. PROVIDE SHALL MEAN "FURNISH AND INSTALL". WORK INCLUDES INSTALLATION OF ALL ELECTRICAL EQUIPMENT AND SYSTEMS, INCLUDING ANY FURNISHED BY OWNER, COMPLETE AND OPERATIONAL TO DOCUMENTS.
2. THE CONTRACTOR SHALL COMPLY WITH THE CONSTRUCTION PRACTICES AND REQUIREMENTS OF THE LATEST EDITION OF THE NATIONAL ELECTRIC CODE (NFPA 70), NATIONAL ELECTRICAL SAFETY CODE, AMERICAN ELECTRICIANS HANDBOOK BY CROFT EDISON ELECTRIC INSTITUTE, APPLICABLE INSTRUCTIONS OF MANUFACTURERS OF EQUIPMENT AND MATERIALS SUPPLIED FOR THE PROJECT, AND ALL ORDINANCES, RULES AND POLICIES OF THE STATE AND COUNTY IN WHICH THE WORK IS TO BE PERFORMED.
3. THE CONTRACTOR SHALL OBTAIN AND PAY FOR ALL FEES, PERMITS, LICENSES AND INSPECTIONS REQUIRED FOR THIS WORK.
4. ALL CONDUIT SHALL BE MINIMUM SIZE 3/4 INCH. EMT SHALL BE USED INDOORS. GALVANIZED RIGID STEEL SHALL BE USED IN EXPOSED OUTDOOR LOCATIONS. CONDUIT BELOW GRADE SHALL BE SCHEDULE 40 PVC. TRANSFORM ALL PVC CONDUIT TO RIGID GALVANIZED STEEL BEFORE PENETRATING SLAB.
5. FITTINGS FOR EMT CONDUIT SHALL BE COMPRESSION TYPE. SET SCREW FITTINGS SHALL NOT BE ALLOWED.
6. CONDUITS SIZES CALLED OUT ON THE DRAWINGS ARE NOT NECESSARILY BASED ON THE MINIMUM SIZE ALLOWED BY THE NATIONAL ELECTRICAL CODE AND MAY BE PURPOSELY OVERSIZED FOR FUTURE CONDUCTORS OR TO AVOID EXCESS CONDUIT HEATING. CONDUIT SIZES NOT CALLED OUT ON THE DRAWINGS SHALL BE SIZED BY THE CONTRACTOR BASED ON THE ACTUAL NUMBER OF CONDUCTORS TO BE INSTALLED, USING THE NATIONAL ELECTRICAL CODE AS A GUIDE. IN NO CASE SHALL CONDUIT SIZES BE SMALLER THAN IS REQUIRED BY THE NATIONAL ELECTRICAL CODE.
7. ALL CIRCUITS SHALL INCLUDE AN INSULATED GREEN GROUNDING CONDUCTOR, SIZED PER TABLE 250-122 OF THE NATIONAL ELECTRICAL CODE. THIS CONDUCTOR SHALL BE CARRIED IN ALL RACEWAYS INCLUDING THOSE INSTALLED FOR SWITCH LEGS AND SHALL BE ATTACHED TO THE DEVICE OR EQUIPMENT HOUSING USING A SUITABLE GROUNDING LUG.
8. THE CONTRACTOR SHALL PROVIDE AND INSTALL ALL JUNCTION AND PULL BOXES REQUIRED FOR THE INSTALLATION OF ELECTRICAL DEVICES AND EQUIPMENT, WHETHER OR NOT SPECIFICALLY INDICATED ON THE PLANS. SIZING OF THESE BOXES SHALL BE PER THE NATIONAL ELECTRICAL CODE.
9. THE CONTRACTOR SHALL FURNISH ALL EQUIPMENT FOR TEMPORARY CONSTRUCTION POWER AS REQUIRED.
10. SHOULD PROJECT CONDITIONS REQUIRE REARRANGEMENT OF WORK, THE CONTRACTOR SHALL MARK SUCH CHANGES ON THE FIELD POSTED DRAWINGS. IF THESE CHANGES REQUIRE ALTERNATE METHODS TO THOSE SPECIFIED IN THE CONTRACT DOCUMENTS, THE CONTRACTOR SHALL SUBMIT DRAWINGS SHOWING THE PROPOSED ALTERNATE METHODS TO THE CONTRACTING OFFICER. THE CONTRACTOR SHALL NOT PROCEED UNTIL APPROVAL IS OBTAINED. REARRANGEMENT OF WORK FOR THE PURPOSE OF COORDINATION SHALL NOT BE CONSIDERED AN ITEM FOR EXTRA COST.
11. THE CONTRACTOR SHALL BE RESPONSIBLE FOR COORDINATING AND DETAILED SCHEDULING OF THE SITE INSPECTION WORK BY UTILITY COMPANIES AND ALL OTHER CONCERNED PARTIES AND AGENCIES.
12. PROVIDE PROTECTION FOR MATERIAL AND EQUIPMENT FROM LOSS, DAMAGE, CORROSION AND EFFECTS OF MOISTURE. REPAIR OR REPLACE DAMAGED ITEMS AT NO ADDITIONAL COST TO THE OWNER.
13. VISIT PROJECT SITE PRIOR TO BID SUBMITTAL TO ASCERTAIN CONDITIONS AND COST ALLOWANCES THAT AFFECT THE PROPOSED WORK.
14. INSTALL MATERIALS AND EQUIPMENT IN WORKMANLIKE MANNER AND IN STRICT ACCORDANCE WITH MANUFACTURER'S RECOMMENDATIONS, UNLESS OTHERWISE SPECIFIED OR DIRECTED BY THE ENGINEER.
15. MATERIALS AND WORKMANSHIP SUBJECT TO INSPECTION AT ANY TIME BY THE OWNER OR HIS REPRESENTATIVE; CORRECT ANY WORK OR MATERIALS NOT IN ACCORDANCE WITH DRAWINGS OR FOUND TO BE DEFICIENT OR DEFECTIVE IN A MANNER SATISFACTORY TO THE OWNER AT NO ADDITIONAL COST.
16. PROVIDE ALL FIRST QUALITY, NEW MATERIALS, FREE FROM DEFECTS SUITABLE FOR SPACE PROVIDED AND APPROVED BY UL WHERE STANDARDS HAVE BEEN PROVIDED BY THAT AGENCY.
17. PROVIDE STANDARD MATERIALS AND EQUIPMENT OF MANUFACTURER'S REGULARLY ENGAGED IN THE PRODUCTION OF THESE PRODUCTS. PROVIDE PRODUCTS OF A SINGLE MANUFACTURER WHERE TWO OR MORE UNITS OF THE SAME CALL ARE REQUIRED.
18. ALL WIRING TO BE STRANDED TYPE THWN COPPER UNLESS NOTED OTHERWISE, #12 AWG MINIMUM, ALL WIRING SHALL BE IN CONDUIT, 3/4" MINIMUM. THHN IS ALLOWABLE FOR #10 AND SMALLER.

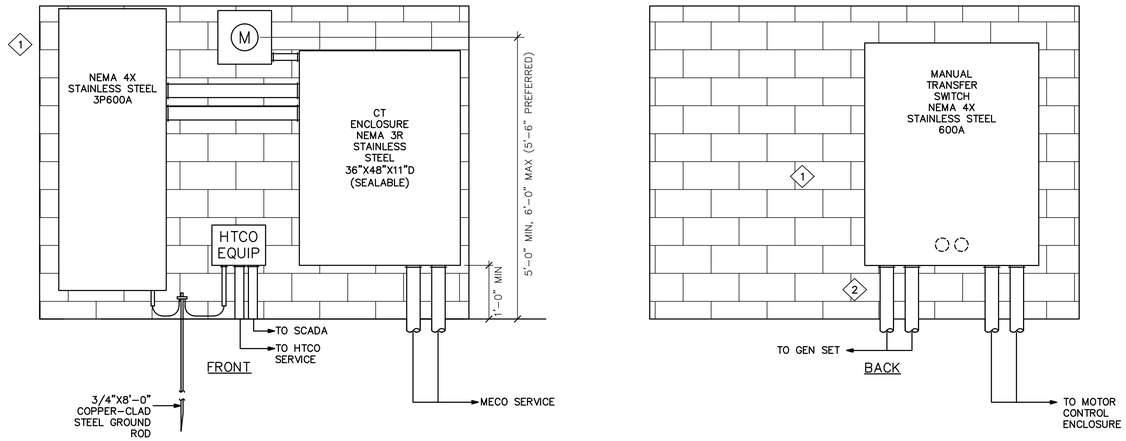

SERVICE EQUIPMENT WALL ELEVATION

SCALE: 3/4" = 1'-0"

PLAN NOTES:

1. SEE SERVICE EQUIPMENT WALL DETAILS.
2. STUB WITH CAP.

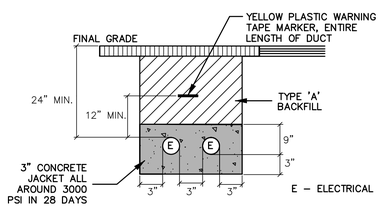

DUCT SECTION - MECO SERVICE FEED

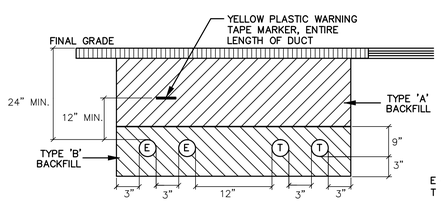

TYPE "A" - BEACH SAND, EARTH, OR EARTH AND GRAVEL. IF EARTH AND GRAVEL, THE MAXIMUM ROCK SHALL BE 1" AND THE MIXTURE SHALL CONTAIN NOT MORE THAN 50% BY VOLUME OF ROCK PARTICLES.

TYPE "B" - BEACH SAND, EARTH, OR EARTH AND GRAVEL. IF EARTH AND GRAVEL, THE MIXTURE MUST PASS A 1/2" MESH SCREEN AND CONTAIN NOT MORE THAN 20% BY VOLUME OF ROCK PARTICLES. CORAL OR CORAL WASTE WILL NOT BE ACCEPTABLE.

E - ELECTRICAL
T - TELEMETRY (IF APPLICABLE)

TYPICAL DUCT SECTION

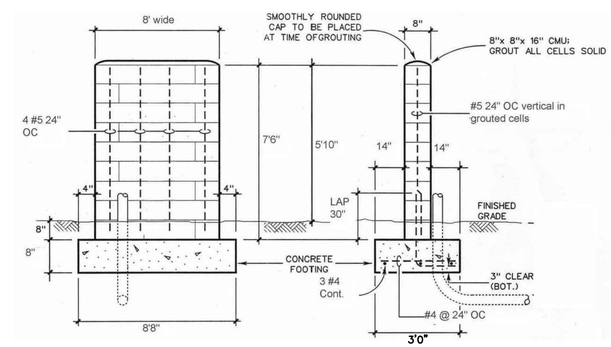

FRONT VIEW

SIDE VIEW

SERVICE EQUIPMENT WALL DETAILS

NOT TO SCALE

AustinTsutsumi
& ASSOCIATES, INC.
CIVIL ENGINEERS I SURVEYORS
HONOLULU I WAILUKU I HILO, HAWAII

501 SUMNER STREET, SUITE 521
HONOLULU, HAWAII 96817

PHONE: 808-533-3646
FAX: 808-526-1267

STATE OF HAWAII
DEPARTMENT OF
HAWAIIAN HOME LANDS

PULEHUNUI
REGIONAL
INFRASTRUCTURE

AUSTIN, TSUTSUMI & ASSOC., INC.
ENGINEERS, SURVEYORS • HONOLULU, HAWAII

MARK P. RICKARD
LICENSED
PROFESSIONAL
ENGINEER
No. 8991-E
HAWAII, U.S.A.

This work was prepared by me or under my supervision and construction of this project will be under my observation. (Observation of construction as defined in Chapter 16-115 Subchapter 1 Definitions of the Hawaii Administrative Rules "Professional Engineers, Architects, Surveyors, and Landscape Architects.")

SIGNATURE — APRIL 30, 2020 EXP. DATE OF THE LICENSE

0 1 2
LINE IS 2 INCHES AT FULL SIZE
(If NOT 2-inches : Scale Accordingly)

REVISION	DATE	BRIEF	BY

Project No:	16-576
Scale:	AS NOTED
Date:	1/22/19
Designed By:	MPR
Drawn By:	AKK
Checked By:	MPR

NORTH PUMP STATION
DETAILS

DWG. NO.

EA1-5

SHEET OF XX

FILE	POCKET	FOLDER	NO.

JOB NO. 0-11-056.004
FN: H:\ACAD2\2019-60 PULEHUNUI NORTH AND SOUTH PUMP STATIONS\NORTH PUMP STATION\E-4.DWG

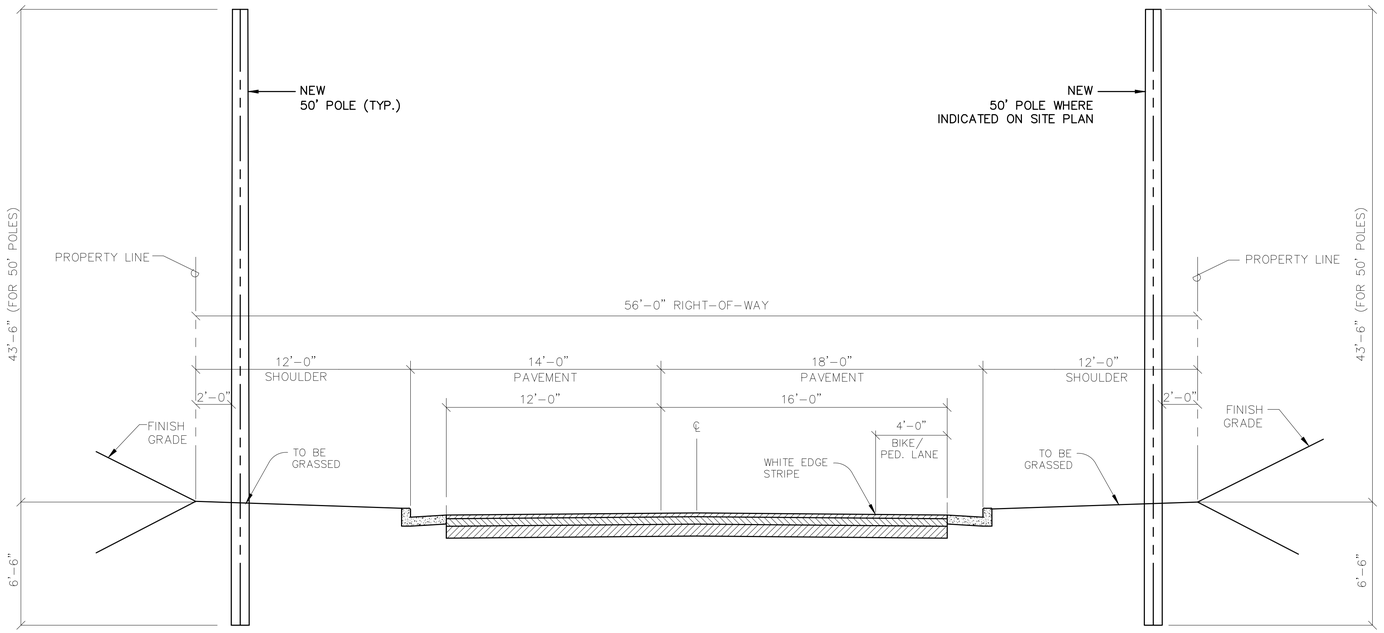

POLE DETAIL @ TYPICAL SECTION - 56 FT. RIGHT-OF-WAY

NOT TO SCALE

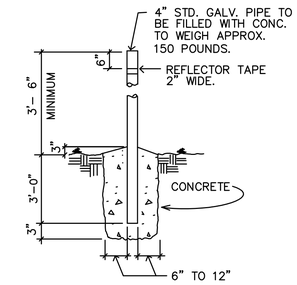

NOTE:

BARRIER POSTS ARE TO BE PAINTED YELLOW ACCORDING TO ANSI SPEC Z535.1 TO COMPLY WITH OSHA STANDARD 1910.144 FOR COLORING CODE. A 2" WIDE STRIPE OF REFLECTIVE TAPE MUST BE PLACED 6" BELOW THE TOP OF THE POST.

UG-30-5000

DETAIL "X"

NOT TO SCALE

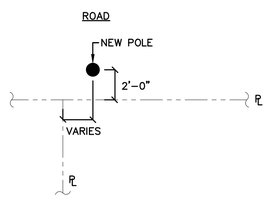

TYPICAL POLE LOCATION IN R-O-W

NOT TO SCALE

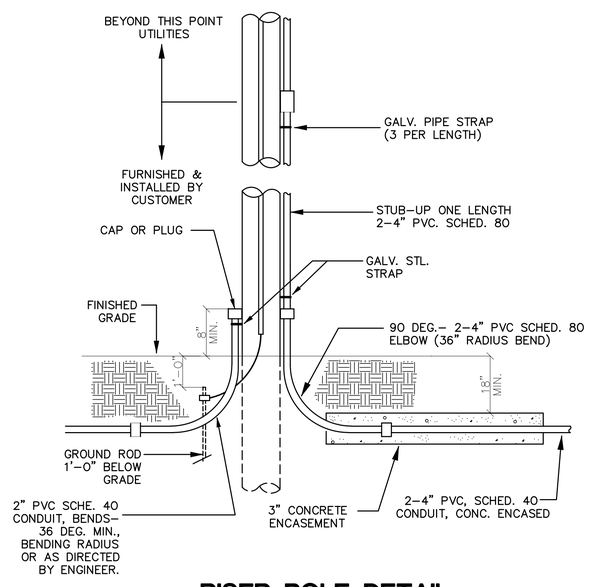

RISER POLE DETAIL

NOT TO SCALE

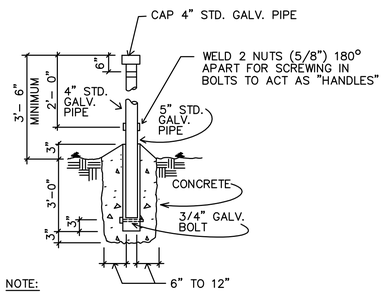

NOTE:

BARRIER POSTS ARE TO BE PAINTED YELLOW ACCORDING TO ANSI SPEC Z535.1 TO COMPLY WITH OSHA STANDARD 1910.144 FOR COLORING CODE. A 2" WIDE STRIPE OF REFLECTIVE TAPE MUST BE PLACED 6" BELOW THE TOP OF THE POST.

THE PIPE THAT IS TO BE PLACED DIRECTLY IN FRONT OF THE DOORS SHALL NOT BE FILLED WITH CONCRETE. THE PIPE SHALL BE CAPPED AND THE WELDED NUTS USED TO SCREW IN BOLTS TO ACT AS HANDLES FOR LIFTING. THE BOLTS ARE TO BE REMOVED AFTER INSTALLATION.

UG-30-5000

DETAIL "X-1"

NOT TO SCALE

AustinTsutsumi
& ASSOCIATES, INC.
CIVIL ENGINEERS I SURVEYORS
HONOLULU I WAILUKU I HILO, HAWAII

501 SUMNER STREET, SUITE 521
HONOLULU, HAWAII 96817

PHONE: 808-533-3646
FAX: 808-526-1267

STATE OF HAWAII
DEPARTMENT OF
HAWAIIAN HOME LANDS

PULEHUNUI
REGIONAL
INFRASTRUCTURE

AUSTIN, TSUTSUMI & ASSOC., INC.
ENGINEERS, SUVEYORS • HONOLULU, HAWAII

MARK P. RICKARD
LICENSED
PROFESSIONAL
ENGINEER
No. 8991-E
HAWAII, U.S.A.

This work was prepared by me or under my supervision and construction of this project will be under my observation. (Observation of construction as defined in Chapter 16-115 Subchapter 1 Definitions of the Hawaii Administrative Rules "Professional Engineers, Architects, Surveyors, and Landscape Architects.")

SIGNATURE — APRIL 30, 2020 EXP. DATE OF THE LICENSE

0 1 2
LINE IS 2 INCHES AT FULL SIZE
(If NOT 2-inches : Scale Accordingly)

REVISION	DATE	BRIEF	BY

Project No:	16-576
Scale:	AS NOTED
Date:	1/22/19
Designed By:	MPR
Drawn By:	AKK
Checked By:	MPR

NORTH PUMP STATION
DETAILS

DWG. NO.

EA1-6

SHEET OF XX

FILE	POCKET	FOLDER	NO.

JOB NO. O-11-056.004
FN: H:\ACAD2\2019-60 PULEHUNUI NORTH AND SOUTH PUMP STATIONS\NORTH PUMP STATION\E-5.DWG

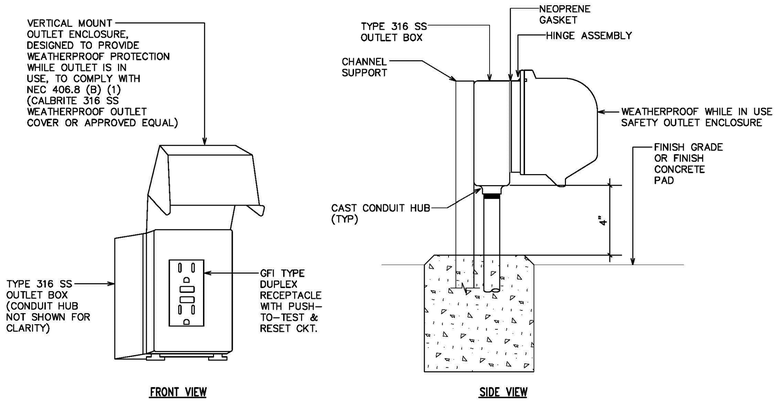

WEATHERPROOF RECEPTACLE DETAIL

NOT TO SCALE

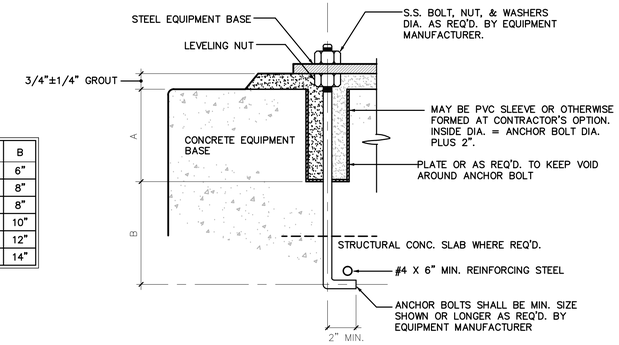

BOLT DIA.	A	B
3/4"	6"	6"
7/8"	6"	8"
1"	8"	8"
1-1/8"	8"	10"
1-1/4"	8"	12"
1-1/2"	10"	14"

ANCHOR BOLT DETAIL

NOT TO SCALE

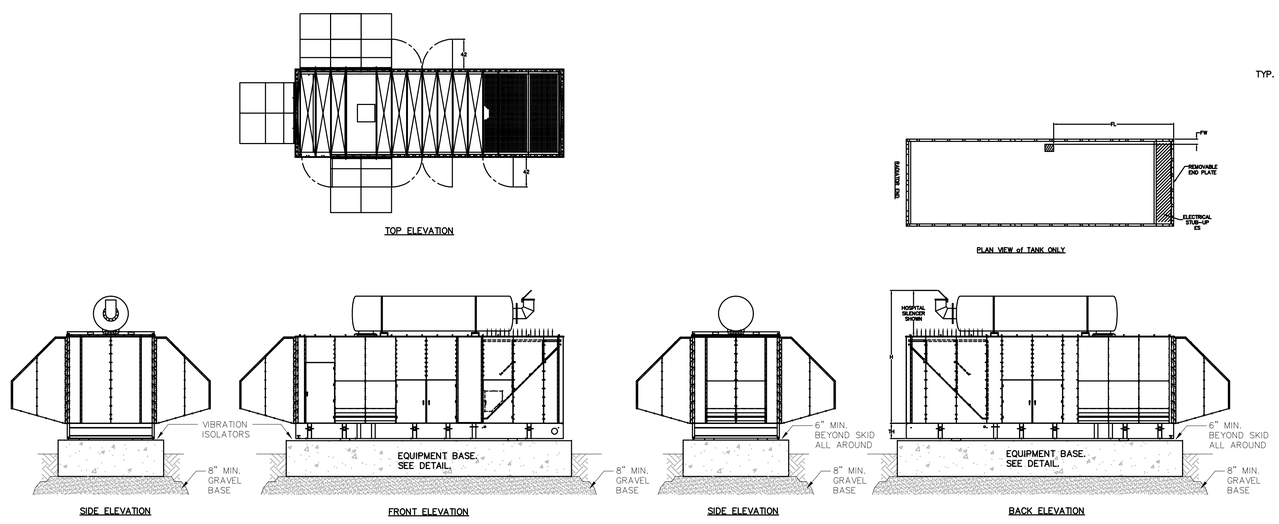

GENERATOR SET ELEVATIONS

NOT TO SCALE

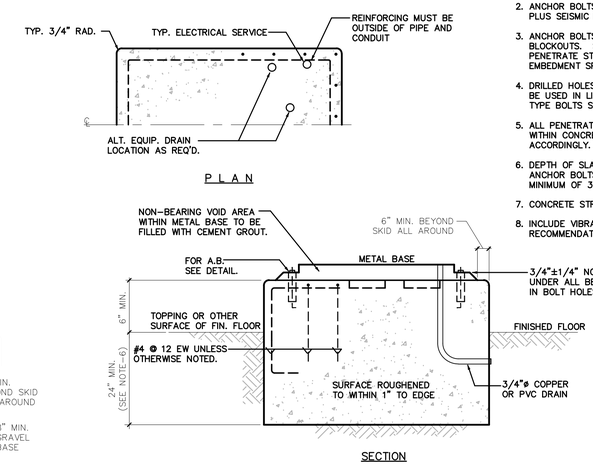

EQUIPMENT BASE DETAIL

NOT TO SCALE

NOTES:

1. ALL EQUIPMENT, INCLUDING TANKS, SHALL HAVE A CONCRETE EQUIPMENT BASE TO SUIT.
2. ANCHOR BOLTS SHALL BE SIZED FOR THE EQUIPMENT LOAD PLUS SEISMIC LOADS (ZONE 2006IBC SEISMIC DESIGN CATEGORY D).
3. ANCHOR BOLTS SHALL BE SET IN POCKETS, EITHER PIPE OR BLOCKOUTS. SEE ANCHOR BOLT DETAIL. ANCHOR BOLT SHALL PENETRATE STRUCTURAL SLAB AS REQ'D TO MEET MINIMUM EMBEDMENT SPECIFIED.
4. DRILLED HOLES WITH A.B. SET IN NON-SHRINK GROUT MAY BE USED IN LIEU OF HOOKED BOLTS. EXPANSION SHIELD TYPE BOLTS SHALL NOT BE USED.
5. ALL PENETRATIONS FOR CONDUIT AND PIPING SHALL BE WITHIN CONCRETE EQUIPMENT PAD. PAD TO BE CONFIGURED ACCORDINGLY.
6. DEPTH OF SLAB TO BE AT MINIMUM THE LENGTH OF ANCHOR BOLTS. PLUS 6". SLAB DEPTH TO BE A MINIMUM OF 30", VERIFY MANUFACTURER'S RECOMMENDATIONS.
7. CONCRETE STRENGTH SHOULD BE MIN. 4000 PSI, IN 28 DAYS.
8. INCLUDE VIBRATION ISOLATORS PER MANUFACTURER'S RECOMMENDATIONS.

AustinTsutsumi & ASSOCIATES, INC.
CIVIL ENGINEERS I SURVEYORS
HONOLULU I WAILUKU I HILO, HAWAII
501 SUMNER STREET, SUITE 521
HONOLULU, HAWAII 96817
PHONE: 808-533-3646
FAX: 808-526-1267

STATE OF HAWAII
DEPARTMENT OF
HAWAIIAN HOME LANDS

PULEHUNUI
REGIONAL
INFRASTRUCTURE

AUSTIN, TSUTSUMI & ASSOC., INC.
ENGINEERS, SUVEYORS • HONOLULU, HAWAII

MARK P. RICKARD
LICENSED PROFESSIONAL ENGINEER
No. 8991-E
HAWAII, U.S.A.

This work was prepared by me or under my supervision and construction of this project will be under my observation. (Observation of construction as defined in Chapter 16-115 Subchapter 1 Definitions of the Hawaii Administrative Rules "Professional Engineers, Architects, Surveyors, and Landscape Architects.")

SIGNATURE — APRIL 30, 2020 EXP. DATE OF THE LICENSE

0 1 2
LINE IS 2 INCHES AT FULL SIZE
(If NOT 2-inches : Scale Accordingly)

REVISION	DATE	BRIEF	BY

Project No:	16-576
Scale:	AS NOTED
Date:	1/22/19
Designed By:	MPR
Drawn By:	AKK
Checked By:	MPR

NORTH PUMP STATION DETAILS

DWG. NO.

EA1-7

SHEET OF XX

FILE	POCKET	FOLDER	NO.

JOB NO. O-11-056.004
FN: H:\ACAD2\2019-60 PULEHUNUI NORTH AND SOUTH PUMP STATIONS\NORTH PUMP STATION\E-6.DWG

NAMEPLATE FEATURES

NAMEPLATE COLOR IS BLACK / WHITE LETTERS
NAMEPLATE ATTACHED WITH STAINLESS STEEL SELF TAPING SCREWS.
1", 3 LINE NAMEPLATE IS SUPPLIED AS STANDARD. 2", 5 LINE SUPPLIED WHEN LINES 4 & 5 HAVE VALUES.
STANDARD CHARACTERS HEIGHT IS 0.1875 [4.76].
17 CHARACTERS MAXIMUM ON LINES 1, 3, 4 & 5 (STANDARD HEIGHT).
15 CHARACTERS MAXIMUM ON LINE 2 (STANDARD HEIGHT).

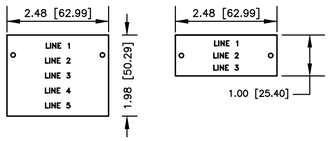

MCC UNIT SCHEDULE

ID		DEVICE INFORMATION			
SECTION NUMBER	CELL	CIRCUIT NAMEPLATE	DEVICE TYPE	DEVICE MOUNTING (SEE NOTES)	DEVICE SIZE
1	C	TVSS	TRANSIENT VOLTAGE SURGE SUPPRESSOR (TVSS)	D	200 kA
1	E				
1	H		DOOR (BLANK)		
1	M		MAIN LUGS (MLO)		
2	D		DOOR (BLANK)		
2	F	PANEL-A	PANELBOARD (PNLBD)	F	100A
2	H		DOOR (BLANK)		
2	M	1 PHASE 5 KVA	DISTRIBUTION TRANSFORMER (XFMR)	F	5 kVA
3	M	PUMP NO. 1	CIRCUIT BREAKER	D	250A
4	M	PUMP NO. 2	CIRCUIT BREAKER	D	250A
5	M	PUMP NO. 3	CIRCUIT BREAKER	D	250A
6	M	SCADA	RELAY STRUCTURE (RLYSTR)		

NOTES:

1. DEVICE MOUNTING: D = DRAWOUT, F = FIXED

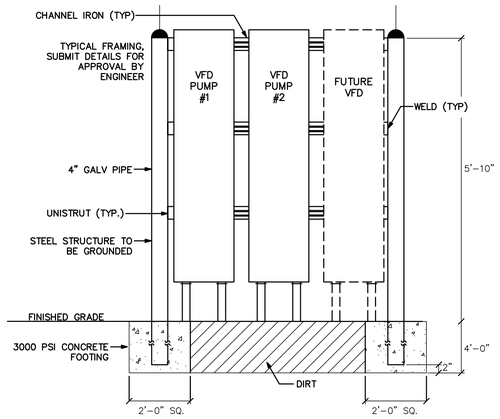

FRAMING DETAIL

VFD EQUIPMENT ELEVATION

NOT TO SCALE

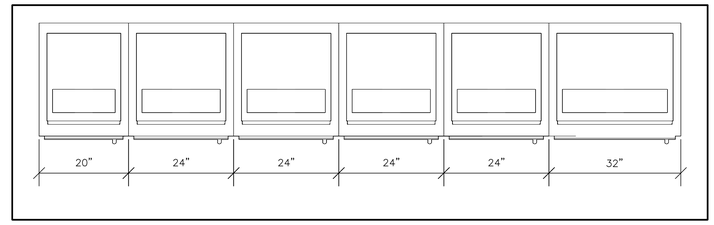

TOP

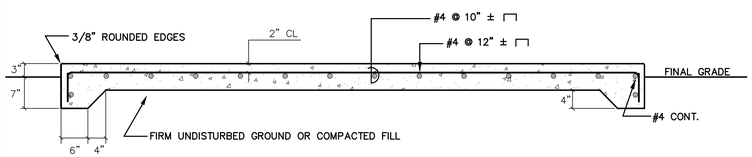

MOTOR CONTROL ENCLOSURE PAD DETAILS

SCALE: 3/4" = 1'-0"

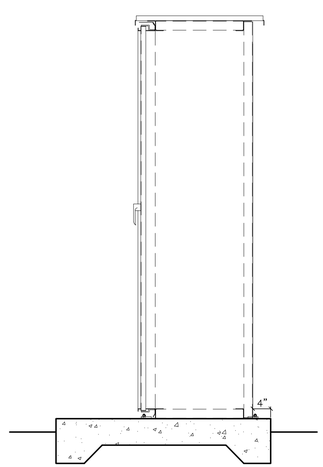

SIDE

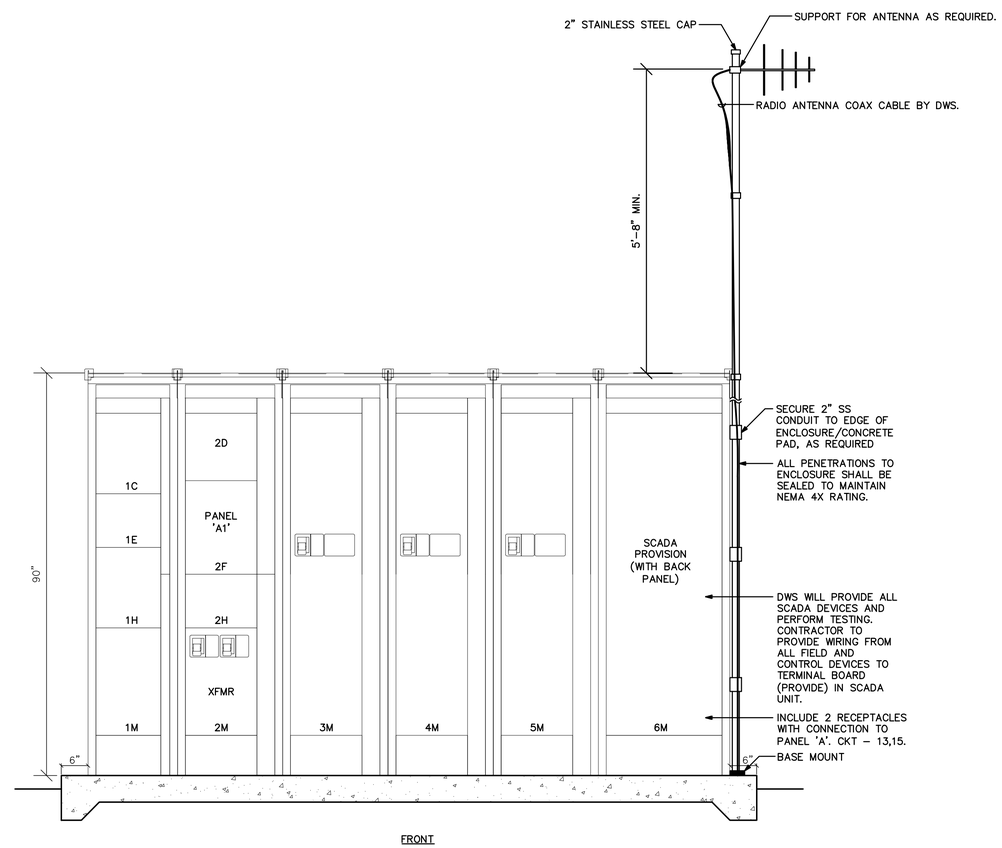

FRONT

MOTOR CONTROL ENCLOSURE DETAILS

SCALE: 3/4" = 1'-0"

JOB NO. 0-11-056.004
FN: H:\ACAD2\2019-60 PULEHUNUI NORTH AND SOUTH PUMP STATIONS\NORTH PUMP STATION\E-7.DWG

AustinTsutsumi
& ASSOCIATES, INC.
CIVIL ENGINEERS I SURVEYORS
HONOLULU I WAILUKU I HILO, HAWAII

501 SUMNER STREET, SUITE 521
HONOLULU, HAWAII 96817

PHONE: 808-533-3646
FAX: 808-526-1267

STATE OF HAWAII
DEPARTMENT OF
HAWAIIAN HOME LANDS

PULEHUNUI
REGIONAL
INFRASTRUCTURE

AUSTIN, TSUTSUMI & ASSOC., INC.
ENGINEERS, SUVEYORS • HONOLULU, HAWAII

MARK P. RICKARD
LICENSED PROFESSIONAL ENGINEER
No. 8991-E
HAWAII, U.S.A.

This work was prepared by me or under my supervision and construction of this project will be under my observation. (Observation of construction as defined in Chapter 16-115 Subchapter 1 Definitions of the Hawaii Administrative Rules "Professional Engineers, Architects, Surveyors, and Landscape Architects.")

SIGNATURE — APRIL 30, 2020 EXP. DATE OF THE LICENSE

0 1 2
LINE IS 2 INCHES AT FULL SIZE
(If NOT 2-inches : Scale Accordingly)

REVISION	DATE	BRIEF	BY

Project No:	16-576
Scale:	AS NOTED
Date:	1/22/19
Designed By:	MPR
Drawn By:	AKK
Checked By:	MPR

NORTH PUMP STATION DETAILS

DWG. NO.

EA1-8

SHEET OF XX

FILE	POCKET	FOLDER	NO.

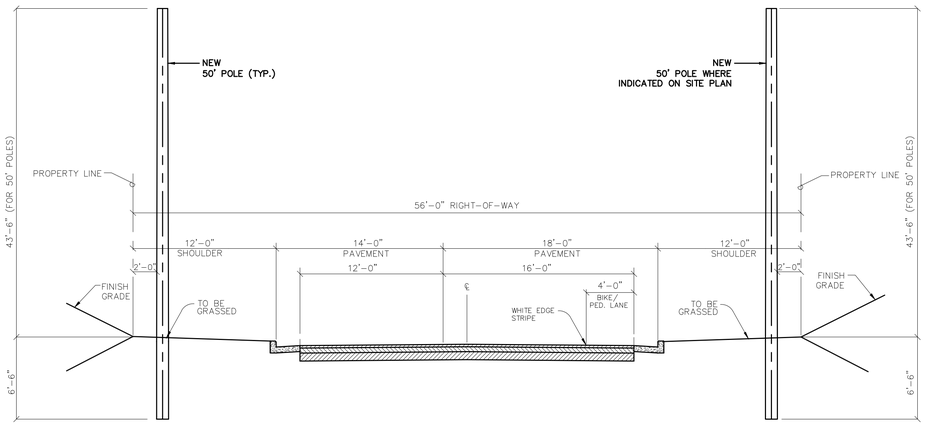

POLE DETAIL @ TYPICAL SECTION - 56 FT. RIGHT-OF-WAY

NOT TO SCALE

GENERAL NOTES:

1. PLANS SUBJECT TO REVIEW AND APPROVAL OF UTILITY COMPANIES.
2. THE CONTRACTOR/UTILITY COMPANY SHALL CONTACT THE DEPARTMENT OF WATER SUPPLY AT PHONE # 270-7340 ONE (1) WEEK PRIOR TO COMMENCEMENT OF WORK.
3. THE CONTRACTOR/UTILITY COMPANY SHALL BE RESPONSIBLE TO VERIFY THE EXACT DEPTH AND LOCATION OF EXISTING WATERLINES IN THE PROJECT AREA PRIOR TO COMMENCEMENT OF WORK AND SHALL MEET WITH THE DEPARTMENT OF WATER SUPPLY PERSONNEL OUT IN THE FIELD TO HELP LOCATE THE EXISTING WATERLINES IN THE PROJECT AREA IF NECESSARY.
4. MAINTAIN A MINIMUM OF THREE (3) FEET CLEAR HORIZONTAL SEPARATION BETWEEN EXISTING WATERLINES AND INSTALLED UTILITIES.
5. MAINTAIN A MINIMUM OF SIX (6) INCHES CLEAR VERTICAL SEPARATION BETWEEN EXISTING WATERLINES AND INSTALLED UTILITIES AT ALL CROSSINGS.
6. ANY INSTALLED UTILITY CROSSING AN EXISTING WATERLINE SHALL BE CONCRETE JACKETED A MINIMUM OF FIVE (5) FEET ON BOTH SIDES OF THE CROSSING.

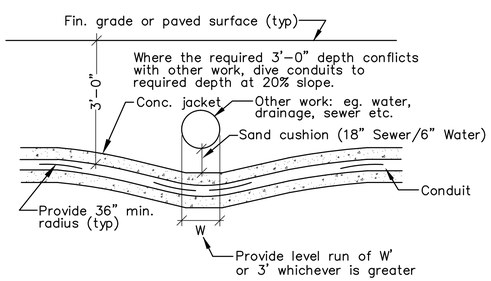

TYPICAL DUCTS CROSSING UNDER OTHER WORK

NOT TO SCALE

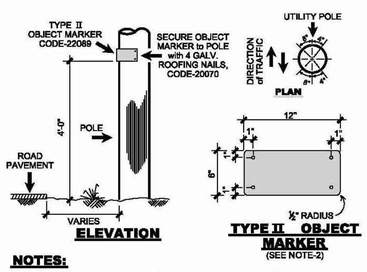

NOTES:

1. THE TYPE II OBJECT MARKER (OM2-2H, 12"x6", per MUTCD 2003) shall be made of HIGH INTENSITY AMBER REFLECTIVE SHEETING MATERIAL OVERLAYED on 0.020" ALUMINUM SHEETING.
2. INSTALL TWO(2) OBJECT MARKERS: ONE ON EACH SIDE OF POLE FACING ONCOMING TRAFFIC AS SHOWN ON THIS PLAN VIEW.

COUNTY REQUIRED TYPE II MARKER

DEPARTMENT OF WATER SUPPLY NOTES:

1. THE CONTRACTOR SHALL CONTACT THE DWS (PH# 243-7633) PRIOR TO COMMENCEMENT OF WORK.
2. THE CONTRACTOR SHALL CONTACT THE DWS FOR THE EXACT DEPTH AND LOCATION OF EXISTING WATERLINES. SERVICE LATERALS, AND APPURTENANCES TO BE DETERMINED IN THE FIELD.
3. IT SHALL BE THE CONTRACTOR'S RESPONSIBILITY TO LOCATE SAME (ITEM #2) PRIOR TO TRENCHING. FACILITIES DAMAGED BY THE CONTRACTOR'S OPERATION SHALL BE REPAIRED IMMEDIATELY BY THE CONTRACTOR AT HIS/HER EXPENSE.
4. KEEP 3 FEET MINIMUM HORIZONTAL CLEARENCE AND / OR 6 INCH MINIMUM VERTICAL CLEARANCE BETWEEN EXISTING WATER SYSTEM IMPROVEMENTS AND ELECTRICAL UTILITIES.
5. ANY ELECTRICAL CONDUIT, WHEN INDEPENDENTLY INSTALLED AND CROSSING AN EXISTING WATERLINE, GAS, OIL, OR OTHER PIPE SYSTEMS, SHALL BE CONCRETE JACKETED 5 FEET OF BOTH SIDES OF CROSSING IF IT IS SEPARATED BY LESS THAN 6 INCHES.

CONTRUCTION NOTES

1. CONTRACTOR SHALL OBTAIN A PERMIT TO PERFORM WORK ON COUNTY HIGHWAYS FROM THE DEVELOPMENT SERVICES ADMINISTRATION TWO WEEKS PRIOR TO THE COMMENCEMENT OF WORK.
2. STANDARD DETAIL DRAWINGS AND STANDARD SPECIFICATIONS OF THE DEPARTMENT OF PUBLIC WORKS SHALL BE INCLUDED AS PART OF THE CONSTRUCTION PLANS.
3. ALL CONSTRUCTION WORK SHALL STRICTLY CONFORM TO THE LATEST VERSION OF THE HAWAII STANDARD SPECIFICATIONS FOR ROAD AND BRIDGE PUBLIC WORKS CONSTRUCTION, AND THE SEPTEMBER 1984 "STANDARD DETAILS" FOR PUBLIC WORKS CONSTRUCTION OF THE DEPARTMENT OF PUBLIC WORKS, AS AMENDED.
4. IF EXISTING UTILITIES, WHETHER OR NOT SHOWN ON PLANS, ARE DAMAGED DURING CONSTRUCTION, THE CONTRACTOR SHALL AT HIS OWN EXPENSE BE REQUIRED TO REPAIR SUCH UTILITIES.
5. THE DIRECTOR PUBLIC WORKS AND/OR THE DIRECTOR OF THE DEPARTMENT OF WATER SUPPLY HAS THE RIGHT TO STOP CONSTRUCTION SHOULD ANY WORK BE FOUND CONTRARY TO THE APPROVED CONSTRUCTION PLAN OR DETRIMENTAL TO THE PUBLIC'S INTEREST.
6. THE CONTRACTOR SHALL SCHEDULE A PRE-CONSTRUCTION MEETING WITH THE DEVELOPMENT SERVICES ADMINISTRATION FIVE (5) DAYS PRIOR TO COMMENCEMENT OF CONSTRUCTION.
7. THE CONTRACTOR SHALL, AT HIS OWN EXPENSE, KEEP THE PROJECT AREA AND SURROUNDING AREA FREE FROM DUST NUISANCE. THE WORK SHALL BE IN CONFORMANCE WITH AIR POLLUTION CONTROL STANDARDS AND REGULATIONS OF THE STATE DEPARTMENT OF HEALTH AND COUNTY GRADING ORDINANCE.
8. THE CONTRACTOR SHALL REMOVE ALL SILT AND DEBRIS RESULTING FROM HIS WORK AND DEPOSITED IN DRAINAGE FACILITIES, ROADWAYS AND OTHER AREAS. THE COST INCURRED FOR ANY NECESSARY REMEDIAL ACTION ORDERED BY THE DIRECTOR OF PUBLIC WORKS SHALL BE PAID BY THE CONTRACTOR.
9. CONSTRUCTION DEBRIS AND WASTES SHALL BE DEPOSITED AT AN APPROPRIATE WORK SITE. THE CONTRACTOR SHALL INFORM THE DIRECTOR OF PUBLIC WORKS OF THE LOCATION OF THE DISPOSAL SITES. THE DISPOSAL SITE MUST FULFILL THE REQUIREMENTS OF THE GRADING ORDINANCE.
10. THE CONTRACTOR SHALL SUBMIT A TIFF AND FIVE (5) COPIES OF THE "AS-BUILT" DRAWINGS PRIOR TO THE FINAL APPROVAL OF THE IMPROVEMENTS.
11. IF THE CLEARANCE BETWEEN A WASTEWATER LINE AND A NEW OR EXISTING WATERLINE IS EIGHTEEN INCHES (18") OR LESS, THE WASTEWATER LINE SHALL BE CONCRETE-JACKETED IN ACCORDANCE WITH THE STANDARD DETAILS OF PUBLIC WORKS CONSTRUCTION DATED SEPTEMBER 1984, AS AMENDED.
12. SHOULD HISTORIC SITES SUCH AS WALLS, PLATFORMS, PAVEMENTS, OR MOUNDS, OR REMAINS SUCH AS ARTIFACTS BURIALS, CONCENTRATION OF SHELL OR CHARCOAL BE ENCOUNTERED DURING CONSTRUCTION ACTIVITIES, WORK SHALL CEASE IMMEDIATELY IN THE IMMEDIATE VICINITY OF THE FIND AND THE FIND SHALL BE PROTECTED FROM FURTHER DAMAGE. THE CONTRACTOR AND/OR LANDOWNER SHALL IMMEDIATELY CONTACT THE STATE HISTORIC PRESERVATION DIVISION (692-8015), WHICH WILL ASSESS THE SIGNIFICANCE OF THE FIND AND RECOMMEND AN APPROPRIATE MITIGATION MEASURE, IF NECESSARY.
13. PURSUANT OF MAUI COUNTY CODE SECTION 3.44.015(C), THE COUNTY OF MAUI IS NOT RESPONSIBLE FOR ANY PARK, ROADWAY, EASEMENT (INCLUDING BUT NOT LIMITED TO DRAINAGE, SEWER, ACCESS, RECLAIMED WATER, OR AVIGATION EASEMENT), OR ANY OTHER INTEREST IN REAL PROPERTY SHOWN ON THIS MAP OR SHOWN ON THESE PLANS, UNLESS THE MAUI COUNTY COUNCIL HAS ACCEPTED ITS DEDICATION BY A RESOLUTION APPROVED BY A MAJORITY OF COUNCIL'S MEMBERS AT A REGULAR OR SPECIAL MEETING OF THE MAUI COUNTY COUNCIL.
14. STEEL PLATE WARNING SIGNS ARE REQUIRED FOR ALL STEEL PLATES IN THE RIGHT-OF-WAY.
15. WHEELCHAIR RAMP INSPECTION/CERTIFICATION FORMS SHALL BE REQUIRED FOR ALL NEWLY CONSTRUCTED RAMPS.
16. ALL STRIPING AND PAVEMENT MARKINGS SHALL BE OF THERMOPLASTIC MATERIAL.
17. COMPACTION REQUIREMENTS
    a. TESTING OF MATERIALS SHALL BE CONDUCTED BY AN APPROVED INDEPENDENT TESTING AGENCY IN ACCORDANCE WITH ASTM STANDARD METHODS OR AS SPECIFIED BY THE DEPARTMENT OF PUBLIC WORKS, ENGINEERING DIVISION, AS FOLLOWS:
    i. EMBANKMENT/SELECT BORROW AND SUBGRADE MATERIALS: ONE (1) COMPACTION TEST PER 600 SQUARE YARDS PER LIFT;
    ii. AGGREGATE SUBBASE COURSE: ONE (1) COMPACTION TEST PER 400 SQUARE YARDS; ONE (1) GRADATION AND SAND EQUIVALENT TEST PER LIFT PER PROJECT;
    iii. AGGREGATE BASE COURSE: ONE (1) COMPACTION TEST PER 300 SQUARE YARDS; ONE (1) GRADATION AND SAND EQUIVALENT TEST PER LIFT PER PROJECT;
    iv. ASPHALT CONCRETE PAVEMENT OR ASPHALT TREATED BASE COURSE; THREE (3) A.C. CORES FOR THICKNESS AN DENSITY TESTS PER PROJECT;
    v. TRENCH BACKFILL MATERIAL: ONE (1) TEST FOR EACH 300 LINEAL FEET OF TRENCH PER LIFT OF MATERIAL.
    b. CONTRACTOR SHALL SUBMIT ALL TESTING REPORTS INCLUDING RESULTS TO THE COUNTY'S INSPECTION AGENCY FOR REVIEW AND APPROVAL PRIOR TO COUNTY'S ACCEPTANCE OF WORK.
    c. THE CONTRACTOR SHALL BE REQUIRED TO NOTIFY THE COUNTY OF ANY TESTING FAILURES AND CORRECT EACH FAILURE PRIOR TO PROCEEDING TO THE NEXT PHASE OF CONSTRUCTION.

APPROVALS:

DIRECTOR – DEPARTMENT OF PUBLIC WORKS (APPROVAL FOR WORK WITHIN COUNTY RIGHT OF WAY ONLY) — DATE

DIRECTOR – DEPARTMENT OF ENVIRONMENTAL MANAGEMENT (APPROVAL FOR WORK WITHIN COUNTY RIGHT OF WAY ONLY) — DATE

DIRECTOR – DEPARTMENT OF WATER SUPPLY. COUNTY OF MAUI (APPROVAL LIMITED TO WATER IMPROVEMENTS WHICH WILL BE DEDICATED TO THE DEPARTMENT OF WATER SUPPLY) — DATE

AustinTsutsumi
& ASSOCIATES, INC.
CIVIL ENGINEERS I SURVEYORS
HONOLULU I WAILUKU I HILO, HAWAII

501 SUMNER STREET, SUITE 521
HONOLULU, HAWAII 96817

PHONE: 808-533-3646
FAX: 808-526-1267

STATE OF HAWAII
DEPARTMENT OF
HAWAIIAN HOME LANDS

PULEHUNUI
REGIONAL
INFUSTRUCTURE

AUSTIN, TSUTSUMI & ASSOC., INC.
ENGINEERS, SUVEYORS • HONOLULU, HAWAII

MARK P. RICKARD
LICENSED
PROFESSIONAL
ENGINEER
No. 8991-E
HAWAII, U.S.A.

This work was prepared by me or under my supervision and construction of this project will be under my observation. (Observation of construction as defined in Chapter 16-115 Subchapter 1 Definitions of the Hawaii Administrative Rules "Professional Engineers, Architects, Surveyors, and Landscape Architects.")

SIGNATURE — APRIL 30, 2020 EXP. DATE OF THE LICENSE

0 1 2
LINE IS 2 INCHES AT FULL SIZE
(If NOT 2-inches : Scale Accordingly)

REVISION	DATE	BRIEF	BY

Project No:	16-576
Scale:	AS NOTED
Date:	1/22/19
Designed By:	MPR
Drawn By:	AKK
Checked By:	MPR

PHASE A3 – DHHL
WWTF ACCESS ROAD
NOTES & DETAILS

DWG. NO.

EA3-1

SHEET OF XX

FILE	POCKET	FOLDER	NO.

JOB NO. 0-11-056.004
FN: H:\ACAD2\2019-60.01 PULEHUNUI GRAVITY SEWER WWTP\DRAWINGS\PHASE A3\E-0.DWG

SYMBOL LEGEND

- NEW MECO 150W HPS ST. LIGHT ON WOOD POLE, FULLY CUT-OFF
- NEW 3ø PRIMARY OVERHEAD LINE
- EXISTING OVERHEAD LINE
- NEW POLE MOUNTED TRANSFORMER BANK (3PH)
- EXISTING UTILITY POLE
- NEW UTILITY POLE
- EXISTING UTILITY ANCHOR
- NEW UTILITY ANCHOR
- NEW DUCTS
- T — TELEPHONE DUCTS, QTY. AND SIZE AS INDICATED
- ES — ELECTRICAL DUCTS, QTY AND SIZE AS INDICATED
- NEW METERING EQUIPMENT (SEE SHEET E-4)

GENERAL NOTES:

1. PLANS SUBJECT TO REVIEW AND APPROVAL OF UTILITY COMPANIES.
2. ALL NEW POLE & ANCHOR LOCATIONS ARE TO BE STAKED OUT BY THE DEVELOPER'S SURVEYOR. COORDINATION REQUIRED WITH MECO'S ASSIGNED PLANNER.
3. DEVELOPER SHALL BE RESPONSIBLE FOR THE FULL COST TO RELOCATE MECO FACILITIES IF REQUIRED TO ADEQUATELY CLEAR ALL DRIVEWAYS & THEIR RESPECTIVE APPROACHES WHICH ARE NOT INDICATED ON THIS PLAN.
4. THE UTILITY COMPANY SHALL BE RESPONSIBLE TO VERIFY THE EXACT DEPTH AND LOCATION OF EXISTING WATERLINES IN THE PROJECT AREA PRIOR TO COMMENCEMENT OF WORK AND SHALL MEET WITH THE DEPARTMENT OF WATER SUPPLY PERSONNEL OUT IN THE FIELD TO HELP LOCATE THE EXISTING WATERLINES IN THE PROJECT AREA IF NECESSARY.
5. THE DEVELOPER OR ITS CONTRACTOR WILL BE RESPONSIBLE IN SUBMITTING LANDSCAPE PLANS IN THE PROXIMITY OF THE PROPOSED ELECTRICAL INFRASTRUCTURES AND/OR FACILITIES TO MECO-ENGINEERING FOR ITS REVIEW PRIOR TO THEIR ACCEPTANCE OF SAID INFRASTRUCTURES AND/OR FACILITIES.

PLAN NOTES:

1. EASEMENT REQUIRED FOR FACILITIES LOCATED IN PRIVATE PROPERTY (REFER TO MECO DWG.).
2. NEW UTILITY RISER POLE.
3. NEW POLE-MOUNTED TRANSFORMERS AND UTILITY RISERS.
4. NEW OVERHEAD LINE EXTENSION.
5. EXISTING UTILITY POLES TO REMAIN.

A UTILITY CO. STANDBY MAN IS REQUIRED TO BE AT THE SITE AT THE TIME ANY NON-UTILITY CO. PERSONNEL WILL BE BREAKING INTO OR ENTERING ANY FACILITIES THAT CONTAIN ENERGIZED UTILITY CO. EQUIPMENT OR CABLES.

THREE WORKING DAYS ADVANCE NOTICE IS REQUIRED BY THE UTILITY CO. FOR ANY INSPECTION SERVICE OR STANDBY MAN.

CALL MECO -- PH: 871-7777

NOTE:
SHOULD HISTORIC SITES SUCH AS WALLS, PLATFORMS, PAVEMENTS AND MOUNDS, OR REMAINS SUCH AS ARTIFACTS, BURIALS, CONCENTRATION OF CHARCOAL OR SHELLS ARE ENCOUNTERED DURING CONSTRUCTION WORK, WORK SHALL CEASE IN THE IMMEDIATE VICINITY OF THE FIND AND THE FIND SHALL BE PROTECTED FROM FURTHER DAMAGE. THE CONTRACTOR SHALL IMMEDIATELY CONTACT THE STATE HISTORIC PRESERVATION DIVISION (692-8023), WHICH WILL ASSESS THE SIGNIFICANCE OF THE FIND AND RECOMMEND AN APPROPRIATE MITIGATION MEASURE, IF NECESSARY.

APPROVALS:

MAUI ELECTRIC COMPANY	DATE
HAWAIIAN TELCOM	DATE
SPECTRUM	DATE

NOTE: PLAN NOT FOR CONSTRUCTION UNLESS APPROVED

N
LOCATION MAP
NOT TO SCALE

COUNTY OF MAUI
MAUI COUNTY CODE, CHAPTER 16.16B ENERGY CODE
RESIDENTIAL PROVISIONS

COMPLIANCE METHOD
Check applicable method

☐	R401.2(1) R401.3 through R404 (Prescriptive)
☒	R401.2(2) R405 (Simulated PERFORMANCE ALTERNATIVE)
☐	R401.2(3) R406 (Energy Rating Index Compliance Alternative)
☐	R401.2(4) R401.2.1 (Tropical Zone)
☐	R102.1 (Alternative)

To the best of my knowledge, this project's design substantially conforms to the Energy Code.

Signature: _____ Date: 06-27-19
Name: MARK P. RICKARD
Title: PROJECT ENGINEER
License No.: 8991-E

MAUI COUNTY CODE CHAPTER 20.35
OUTDOOR LIGHTING

THE ELECTRICAL OUTDOOR LIGHTING SYSTEM AND EQUIPMENT HAVE BEEN REVIEWED BY ME AN TO THE BEST OF MY KNOWLEDGE, THIS DESIGN SUBSTANTIALLY CONFORMS TO THE REQUIREMENTS SPECIFIED IN MAUI COUNTY CODE CHAPTER 20.35 OUTDOOR LIGHTING.

SIGNATURE	PROJECT ENGINEER TITLE
MARK P. RICKARD NAME (PRINT)	8991-E STATE OF HAWAII P.E. LICENSE NUMBER

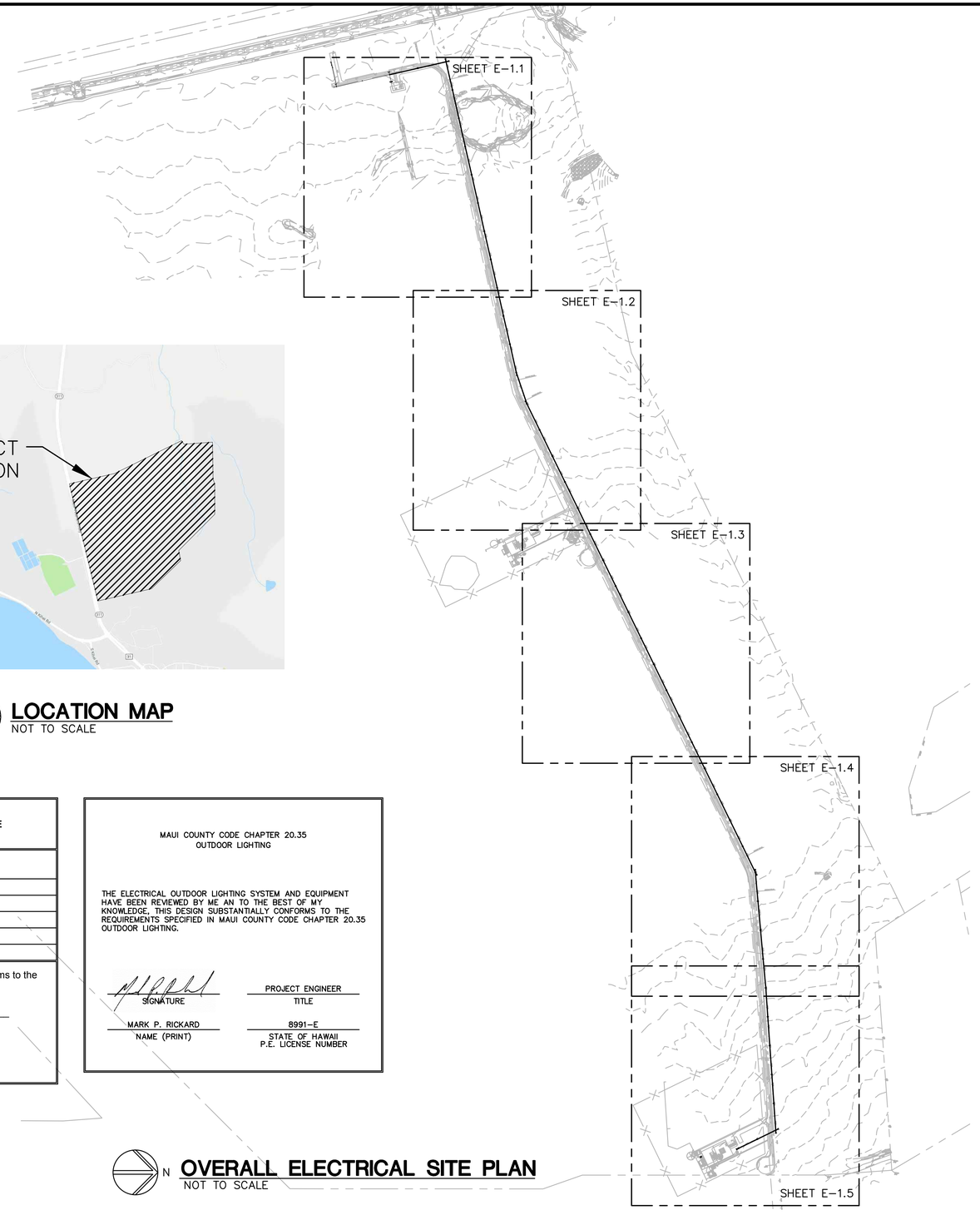

N
OVERALL ELECTRICAL SITE PLAN
NOT TO SCALE

AustinTsutsumi
& ASSOCIATES, INC.
CIVIL ENGINEERS I SURVEYORS
HONOLULU I WAILUKU I HILO, HAWAII
501 SUMNER STREET, SUITE 521
HONOLULU, HAWAII 96817
PHONE: 808-533-3646
FAX: 808-526-1267

STATE OF HAWAII
DEPARTMENT OF
HAWAIIAN HOME LANDS

PULEHUNUI
REGIONAL
INFUSTRUCTURE

AUSTIN, TSUTSUMI & ASSOC., INC.
ENGINEERS, SUVEYORS • HONOLULU, HAWAII

MARK P. RICKARD
LICENSED PROFESSIONAL ENGINEER
No. 8991-E
HAWAII, U.S.A.

This work was prepared by me or under my supervision and construction of this project will be under my observation. (Observation of construction as defined in Chapter 16-115 Subchapter 1 Definitions of the Hawaii Administrative Rules "Professional Engineers, Architects, Surveyors, and Landscape Architects.")

SIGNATURE — APRIL 30, 2020 EXP. DATE OF THE LICENSE

0 1 2
LINE IS 2 INCHES AT FULL SIZE
(If NOT 2-inches : Scale Accordingly)

REVISION	DATE	BRIEF	BY

Project No:	16-576
Scale:	AS NOTED
Date:	1/22/19
Designed By:	MPR
Drawn By:	AKK
Checked By:	MPR

WWTF ACCESS ROAD
OVERALL ELECTRICAL
SITE PLAN, SYMBOL
LEGEND, NOTES

DWG. NO.
EA3-2
SHEET OF XX

FILE	POCKET	FOLDER	NO.

JOB NO. 0-11-056.004
FN: H:\ACAD2\2019-60.01 PULEHUNUI GRAVITY SEWER WWTP\DRAWINGS\PHASE A3\E-1.DWG

SYMBOL LEGEND

- NEW MECO 150W HPS ST. LIGHT ON WOOD POLE, FULLY CUT-OFF
- NEW 3Ø PRIMARY OVERHEAD LINE
- EXISTING OVERHEAD LINE
- NEW POLE MOUNTED TRANSFORMER BANK (3PH)
- EXISTING UTILITY POLE
- NEW UTILITY POLE
- EXISTING UTILITY ANCHOR
- NEW UTILITY ANCHOR
- NEW DUCTS
- T — TELEPHONE DUCTS, QTY. AND SIZE AS INDICATED
- ES — ELECTRICAL DUCTS, QTY AND SIZE AS INDICATED
- NEW METERING EQUIPMENT (SEE SHEET E-4)

GENERAL NOTES:

1. PLANS SUBJECT TO REVIEW AND APPROVAL OF UTILITY COMPANIES.
2. ALL NEW POLE & ANCHOR LOCATIONS ARE TO BE STAKED OUT BY THE DEVELOPER'S SURVEYOR. COORDINATION REQUIRED WITH MECO'S ASSIGNED PLANNER.
3. DEVELOPER SHALL BE RESPONSIBLE FOR THE FULL COST TO RELOCATE MECO FACILITIES IF REQUIRED TO ADEQUATELY CLEAR ALL DRIVEWAYS & THEIR RESPECTIVE APPROACHES WHICH ARE NOT INDICATED ON THIS PLAN.
4. THE UTILITY COMPANY SHALL BE RESPONSIBLE TO VERIFY THE EXACT DEPTH AND LOCATION OF EXISTING WATERLINES IN THE PROJECT AREA PRIOR TO COMMENCEMENT OF WORK AND SHALL MEET WITH THE DEPARTMENT OF WATER SUPPLY PERSONNEL OUT IN THE FIELD TO HELP LOCATE THE EXISTING WATERLINES IN THE PROJECT AREA IF NECESSARY.
5. THE DEVELOPER OR ITS CONTRACTOR WILL BE RESPONSIBLE IN SUBMITTING LANDSCAPE PLANS IN THE PROXIMITY OF THE PROPOSED ELECTRICAL INFRASTRUCTURES AND/OR FACILITIES TO MECO-ENGINEERING FOR ITS REVIEW PRIOR TO THEIR ACCEPTANCE OF SAID INFRASTRUCTURES AND/OR FACILITIES.

PLAN NOTES:

1. EASEMENT REQUIRED FOR FACILITIES LOCATED IN PRIVATE PROPERTY (REFER TO MECO DWG.).
2. NEW UTILITY RISER POLE.
3. NEW POLE-MOUNTED TRANSFORMERS AND UTILITY RISERS.
4. NEW OVERHEAD LINE EXTENSION.
5. EXISTING UTILITY POLES TO REMAIN.

N **PARTIAL ELECTRICAL SITE PLAN-1**
SCALE: 1" = 60'-0"

JOB NO. O-11-056.004
FN: H:\ACAD2\2019-60.01 PULEHUNUI GRAVITY SEWER WWTP\DRAWINGS\PHASE A3\E-1.1.DWG

AustinTsutsumi
& ASSOCIATES, INC.
CIVIL ENGINEERS I SURVEYORS
HONOLULU I WAILUKU I HILO, HAWAII

501 SUMNER STREET, SUITE 521
HONOLULU, HAWAII 96817

PHONE: 808-533-3646
FAX: 808-526-1267

STATE OF HAWAII
DEPARTMENT OF
HAWAIIAN HOME LANDS

PULEHUNUI
REGIONAL
INFUSTRUCTURE

AUSTIN, TSUTSUMI & ASSOC., INC.
ENGINEERS, SUVEYORS • HONOLULU, HAWAII

MARK P. RICKARD
LICENSED PROFESSIONAL ENGINEER
No. 8991-E
HAWAII, U.S.A.

This work was prepared by me or under my supervision and construction of this project will be under my observation. (Observation of construction as defined in Chapter 16-115 Subchapter 1 Definitions of the Hawaii Administrative Rules "Professional Engineers, Architects, Surveyors, and Landscape Architects.")

SIGNATURE — APRIL 30, 2020 EXP. DATE OF THE LICENSE

0 1 2
LINE IS 2 INCHES AT FULL SIZE
(If NOT 2-inches : Scale Accordingly)

REVISION	DATE	BRIEF	BY

Project No:	16-576
Scale:	AS NOTED
Date:	1/22/19
Designed By:	MPR
Drawn By:	AKK
Checked By:	MPR

WWTF ACCESS ROAD
PARTIAL ELECTRICAL
SITE PLAN-1

DWG. NO.
EA3-3
SHEET OF XX

FILE	POCKET	FOLDER	NO.

SYMBOL LEGEND

- NEW MECO 150W HPS ST. LIGHT ON WOOD POLE, FULLY CUT-OFF
- NEW 3ø PRIMARY OVERHEAD LINE
- EXISTING OVERHEAD LINE
- NEW POLE MOUNTED TRANSFORMER BANK (3PH)
- EXISTING UTILITY POLE
- NEW UTILITY POLE
- EXISTING UTILITY ANCHOR
- NEW UTILITY ANCHOR
- NEW DUCTS
- T — TELEPHONE DUCTS, QTY. AND SIZE AS INDICATED
- ES — ELECTRICAL DUCTS, QTY AND SIZE AS INDICATED
- NEW METERING EQUIPMENT (SEE SHEET E-4)

GENERAL NOTES:

1. PLANS SUBJECT TO REVIEW AND APPROVAL OF UTILITY COMPANIES.
2. ALL NEW POLE & ANCHOR LOCATIONS ARE TO BE STAKED OUT BY THE DEVELOPER'S SURVEYOR. COORDINATION REQUIRED WITH MECO'S ASSIGNED PLANNER.
3. DEVELOPER SHALL BE RESPONSIBLE FOR THE FULL COST TO RELOCATE MECO FACILITIES IF REQUIRED TO ADEQUATELY CLEAR ALL DRIVEWAYS & THEIR RESPECTIVE APPROACHES WHICH ARE NOT INDICATED ON THIS PLAN.
4. THE UTILITY COMPANY SHALL BE RESPONSIBLE TO VERIFY THE EXACT DEPTH AND LOCATION OF EXISTING WATERLINES IN THE PROJECT AREA PRIOR TO COMMENCEMENT OF WORK AND SHALL MEET WITH THE DEPARTMENT OF WATER SUPPLY PERSONNEL OUT IN THE FIELD TO HELP LOCATE THE EXISTING WATERLINES IN THE PROJECT AREA IF NECESSARY.
5. THE DEVELOPER OR ITS CONTRACTOR WILL BE RESPONSIBLE IN SUBMITTING LANDSCAPE PLANS IN THE PROXIMITY OF THE PROPOSED ELECTRICAL INFRASTRUCTURES AND/OR FACILITIES TO MECO-ENGINEERING FOR ITS REVIEW PRIOR TO THEIR ACCEPTANCE OF SAID INFRASTRUCTURES AND/OR FACILITIES.

PLAN NOTES:

1. EASEMENT REQUIRED FOR FACILITIES LOCATED IN PRIVATE PROPERTY (REFER TO MECO DWG.).
2. NEW UTILITY RISER POLE.
3. NEW POLE-MOUNTED TRANSFORMERS AND UTILITY RISERS.
4. NEW OVERHEAD LINE EXTENSION.
5. EXISTING UTILITY POLES TO REMAIN.

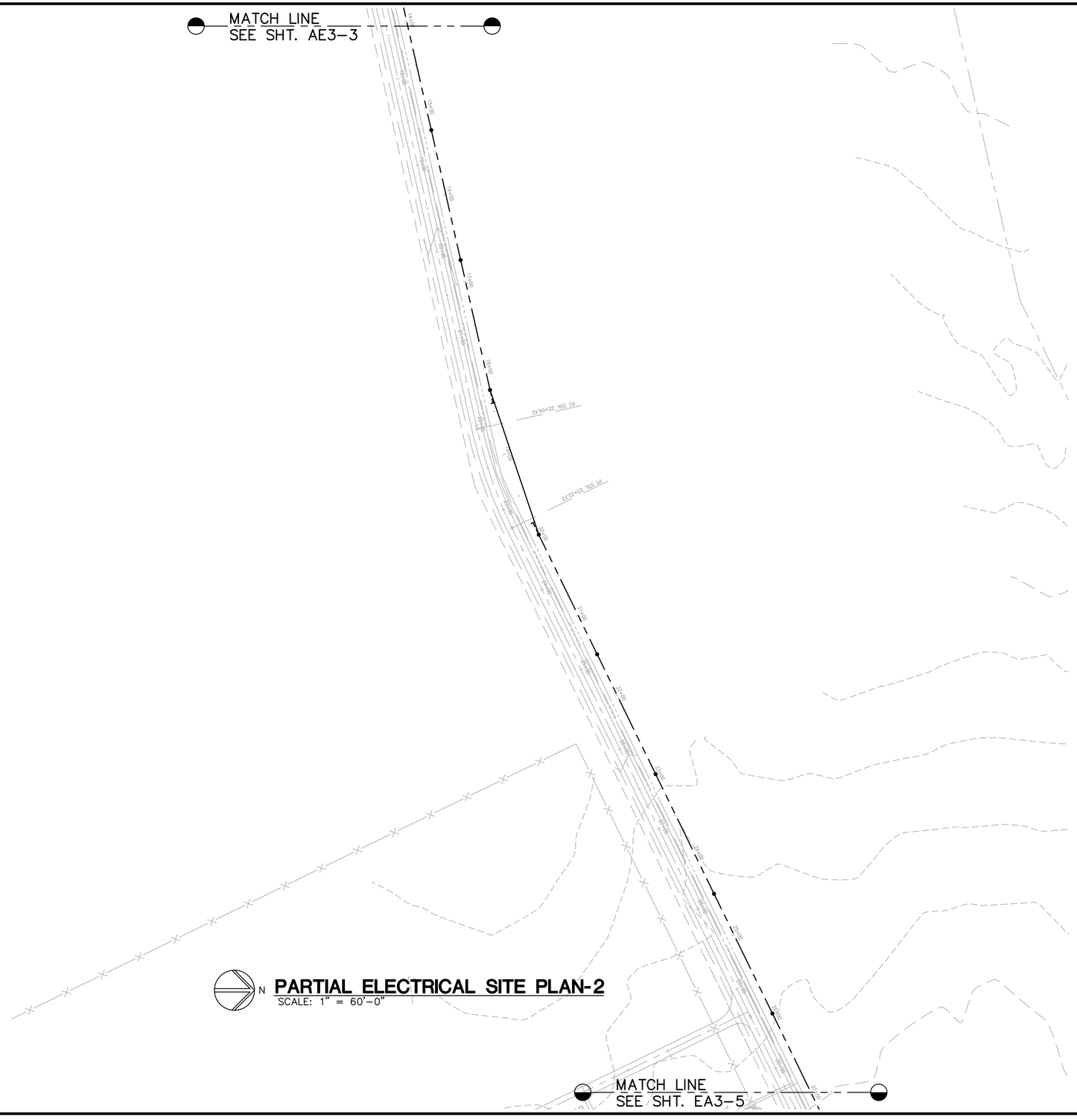

N **PARTIAL ELECTRICAL SITE PLAN-2**
SCALE: 1" = 60'-0"

JOB NO. O-11-056.004
FN: H:\ACAD2\2019-60.01 PULEHUNUI GRAVITY SEWER WWTP\DRAWINGS\PHASE A3\E-1.1.DWG

AustinTsutsumi
& ASSOCIATES, INC.
CIVIL ENGINEERS I SURVEYORS
HONOLULU I WAILUKU I HILO, HAWAII

501 SUMNER STREET, SUITE 521
HONOLULU, HAWAII 96817

PHONE: 808-533-3646
FAX: 808-526-1267

STATE OF HAWAII
DEPARTMENT OF
HAWAIIAN HOME LANDS

PULEHUNUI
REGIONAL
INFUSTRUCTURE

AUSTIN, TSUTSUMI & ASSOC., INC.
ENGINEERS, SUVEYORS • HONOLULU, HAWAII

MARK P. RICKARD
LICENSED PROFESSIONAL ENGINEER
No. 8991-E
HAWAII, U.S.A.

This work was prepared by me or under my supervision and construction of this project will be under my observation. (Observation of construction as defined in Chapter 16-115 Subchapter 1 Definitions of the Hawaii Administrative Rules "Professional Engineers, Architects, Surveyors, and Landscape Architects.")

SIGNATURE — APRIL 30, 2020 — EXP. DATE OF THE LICENSE

0 1 2
LINE IS 2 INCHES AT FULL SIZE
(If NOT 2-inches : Scale Accordingly)

REVISION	DATE	BRIEF	BY

Project No:	16-576
Scale:	AS NOTED
Date:	1/22/19
Designed By:	MPR
Drawn By:	AKK
Checked By:	MPR

WWTF ACCESS ROAD
PARTIAL ELECTRICAL
SITE PLAN-2

DWG. NO.
EA3-4
SHEET OF XX

FILE	POCKET	FOLDER	NO.

SYMBOL LEGEND

- NEW MECO 150W HPS ST. LIGHT ON WOOD POLE, FULLY CUT-OFF
- NEW 3Ø PRIMARY OVERHEAD LINE
- EXISTING OVERHEAD LINE
- NEW POLE MOUNTED TRANSFORMER BANK (3PH)
- EXISTING UTILITY POLE
- NEW UTILITY POLE
- EXISTING UTILITY ANCHOR
- NEW UTILITY ANCHOR
- NEW DUCTS
- T — TELEPHONE DUCTS, QTY. AND SIZE AS INDICATED
- ES — ELECTRICAL DUCTS, QTY AND SIZE AS INDICATED
- NEW METERING EQUIPMENT (SEE SHEET E-4)

GENERAL NOTES:

1. PLANS SUBJECT TO REVIEW AND APPROVAL OF UTILITY COMPANIES.
2. ALL NEW POLE & ANCHOR LOCATIONS ARE TO BE STAKED OUT BY THE DEVELOPER'S SURVEYOR. COORDINATION REQUIRED WITH MECO'S ASSIGNED PLANNER.
3. DEVELOPER SHALL BE RESPONSIBLE FOR THE FULL COST TO RELOCATE MECO FACILITIES IF REQUIRED TO ADEQUATELY CLEAR ALL DRIVEWAYS & THEIR RESPECTIVE APPROACHES WHICH ARE NOT INDICATED ON THIS PLAN.
4. THE UTILITY COMPANY SHALL BE RESPONSIBLE TO VERIFY THE EXACT DEPTH AND LOCATION OF EXISTING WATERLINES IN THE PROJECT AREA PRIOR TO COMMENCEMENT OF WORK AND SHALL MEET WITH THE DEPARTMENT OF WATER SUPPLY PERSONNEL OUT IN THE FIELD TO HELP LOCATE THE EXISTING WATERLINES IN THE PROJECT AREA IF NECESSARY.
5. THE DEVELOPER OR ITS CONTRACTOR WILL BE RESPONSIBLE IN SUBMITTING LANDSCAPE PLANS IN THE PROXIMITY OF THE PROPOSED ELECTRICAL INFRASTRUCTURES AND/OR FACILITIES TO MECO-ENGINEERING FOR ITS REVIEW PRIOR TO THEIR ACCEPTANCE OF SAID INFRASTRUCTURES AND/OR FACILITIES.

PLAN NOTES:

1. EASEMENT REQUIRED FOR FACILITIES LOCATED IN PRIVATE PROPERTY (REFER TO MECO DWG.).
2. NEW UTILITY RISER POLE.
3. NEW POLE-MOUNTED TRANSFORMERS AND UTILITY RISERS.
4. NEW OVERHEAD LINE EXTENSION.
5. EXISTING UTILITY POLES TO REMAIN.

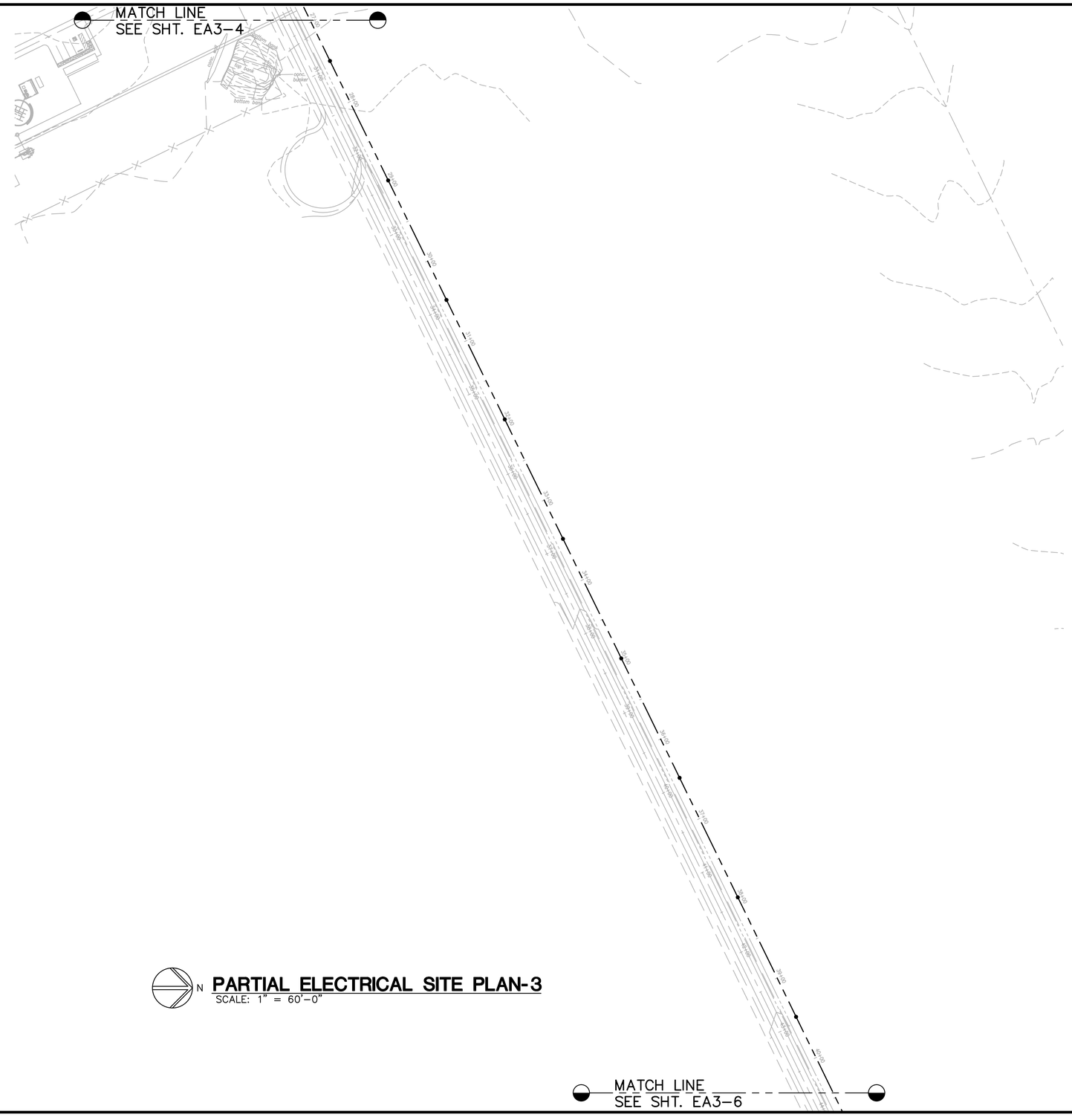

N **PARTIAL ELECTRICAL SITE PLAN-3**
SCALE: 1" = 60'-0"

JOB NO. O-11-056.004
FN: H:\ACAD2\2019-60.01 PULEHUNUI GRAVITY SEWER WWTP\DRAWINGS\PHASE A3\E-1.1.DWG

AustinTsutsumi
& ASSOCIATES, INC.
CIVIL ENGINEERS I SURVEYORS
HONOLULU I WAILUKU I HILO, HAWAII

501 SUMNER STREET, SUITE 521
HONOLULU, HAWAII 96817

PHONE: 808-533-3646
FAX: 808-526-1267

STATE OF HAWAII
DEPARTMENT OF
HAWAIIAN HOME LANDS

PULEHUNUI
REGIONAL
INFUSTRUCTURE

AUSTIN, TSUTSUMI & ASSOC., INC.
ENGINEERS, SUVEYORS • HONOLULU, HAWAII

MARK P. RICKARD
LICENSED PROFESSIONAL ENGINEER
No. 8991-E
HAWAII, U.S.A.

This work was prepared by me or under my supervision and construction of this project will be under my observation. (Observation of construction as defined in Chapter 16-115 Subchapter 1 Definitions of the Hawaii Administrative Rules "Professional Engineers, Architects, Surveyors, and Landscape Architects.")

SIGNATURE — APRIL 30, 2020 EXP. DATE OF THE LICENSE

0 1 2
LINE IS 2 INCHES AT FULL SIZE
(If NOT 2-inches : Scale Accordingly)

REVISION	DATE	BRIEF	BY

Project No:	16-576
Scale:	AS NOTED
Date:	1/22/19
Designed By:	MPR
Drawn By:	AKK
Checked By:	MPR

WWTF ACCESS ROAD
PARTIAL ELECTRICAL
SITE PLAN-3

DWG. NO.
EA3-5
SHEET OF XX

FILE	POCKET	FOLDER	NO.

SYMBOL LEGEND

- NEW MECO 150W HPS ST. LIGHT ON WOOD POLE, FULLY CUT-OFF
- NEW 3Ø PRIMARY OVERHEAD LINE
- EXISTING OVERHEAD LINE
- NEW POLE MOUNTED TRANSFORMER BANK (3PH)
- EXISTING UTILITY POLE
- NEW UTILITY POLE
- EXISTING UTILITY ANCHOR
- NEW UTILITY ANCHOR
- NEW DUCTS
- T — TELEPHONE DUCTS, QTY. AND SIZE AS INDICATED
- ES — ELECTRICAL DUCTS, QTY AND SIZE AS INDICATED
- NEW METERING EQUIPMENT (SEE SHEET E-4)

GENERAL NOTES:

1. PLANS SUBJECT TO REVIEW AND APPROVAL OF UTILITY COMPANIES.
2. ALL NEW POLE & ANCHOR LOCATIONS ARE TO BE STAKED OUT BY THE DEVELOPER'S SURVEYOR. COORDINATION REQUIRED WITH MECO'S ASSIGNED PLANNER.
3. DEVELOPER SHALL BE RESPONSIBLE FOR THE FULL COST TO RELOCATE MECO FACILITIES IF REQUIRED TO ADEQUATELY CLEAR ALL DRIVEWAYS & THEIR RESPECTIVE APPROACHES WHICH ARE NOT INDICATED ON THIS PLAN.
4. THE UTILITY COMPANY SHALL BE RESPONSIBLE TO VERIFY THE EXACT DEPTH AND LOCATION OF EXISTING WATERLINES IN THE PROJECT AREA PRIOR TO COMMENCEMENT OF WORK AND SHALL MEET WITH THE DEPARTMENT OF WATER SUPPLY PERSONNEL OUT IN THE FIELD TO HELP LOCATE THE EXISTING WATERLINES IN THE PROJECT AREA IF NECESSARY.
5. THE DEVELOPER OR ITS CONTRACTOR WILL BE RESPONSIBLE IN SUBMITTING LANDSCAPE PLANS IN THE PROXIMITY OF THE PROPOSED ELECTRICAL INFRASTRUCTURES AND/OR FACILITIES TO MECO-ENGINEERING FOR ITS REVIEW PRIOR TO THEIR ACCEPTANCE OF SAID INFRASTRUCTURES AND/OR FACILITIES.

PLAN NOTES:

1. EASEMENT REQUIRED FOR FACILITIES LOCATED IN PRIVATE PROPERTY (REFER TO MECO DWG.).
2. NEW UTILITY RISER POLE.
3. NEW POLE-MOUNTED TRANSFORMERS AND UTILITY RISERS.
4. NEW OVERHEAD LINE EXTENSION.
5. EXISTING UTILITY POLES TO REMAIN.

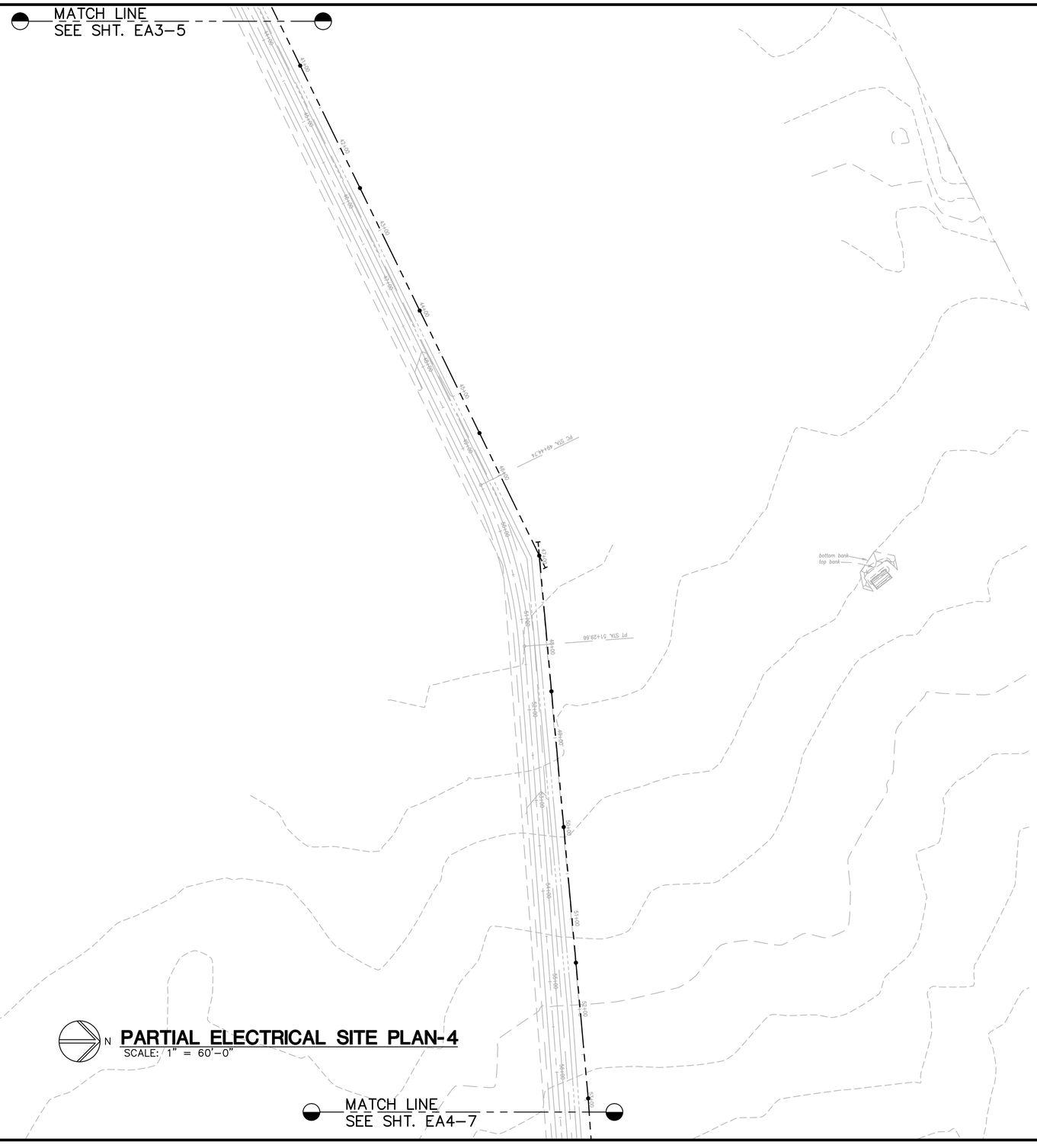

N **PARTIAL ELECTRICAL SITE PLAN-4**
SCALE: 1" = 60'-0"

JOB NO. O-11-056.004
FN: H:\ACAD2\2019-60.01 PULEHUNUI GRAVITY SEWER WWTP\DRAWINGS\PHASE A3\E-1.1.DWG

AustinTsutsumi & ASSOCIATES, INC.
CIVIL ENGINEERS I SURVEYORS
HONOLULU I WAILUKU I HILO, HAWAII
501 SUMNER STREET, SUITE 521
HONOLULU, HAWAII 96817
PHONE: 808-533-3646
FAX: 808-526-1267

STATE OF HAWAII
DEPARTMENT OF
HAWAIIAN HOME LANDS

PULEHUNUI
REGIONAL
INFUSTRUCTURE

AUSTIN, TSUTSUMI & ASSOC., INC.
ENGINEERS, SUVEYORS • HONOLULU, HAWAII

MARK P. RICKARD
LICENSED PROFESSIONAL ENGINEER
No. 8991-E
HAWAII, U.S.A.

This work was prepared by me or under my supervision and construction of this project will be under my observation. (Observation of construction as defined in Chapter 16-115 Subchapter 1 Definitions of the Hawaii Administrative Rules "Professional Engineers, Architects, Surveyors, and Landscape Architects.")

SIGNATURE — APRIL 30, 2020 EXP. DATE OF THE LICENSE

0 1 2
LINE IS 2 INCHES AT FULL SIZE
(If NOT 2-inches : Scale Accordingly)

REVISION	DATE	BRIEF	BY

Project No:	16-576
Scale:	AS NOTED
Date:	1/22/19
Designed By:	MPR
Drawn By:	AKK
Checked By:	MPR

WWTF ACCESS ROAD
PARTIAL ELECTRICAL
SITE PLAN-4

DWG. NO.
EA3-6
SHEET OF XX

FILE	POCKET	FOLDER	NO.

SYMBOL LEGEND

- NEW MECO 150W HPS ST. LIGHT ON WOOD POLE, FULLY CUT-OFF
- NEW 3ø PRIMARY OVERHEAD LINE
- EXISTING OVERHEAD LINE
- NEW POLE MOUNTED TRANSFORMER BANK (3PH)
- EXISTING UTILITY POLE
- NEW UTILITY POLE
- EXISTING UTILITY ANCHOR
- NEW UTILITY ANCHOR
- NEW DUCTS
- T — TELEPHONE DUCTS, QTY. AND SIZE AS INDICATED
- ES — ELECTRICAL DUCTS, QTY AND SIZE AS INDICATED
- NEW METERING EQUIPMENT (SEE SHEET E-4)

GENERAL NOTES:

1. PLANS SUBJECT TO REVIEW AND APPROVAL OF UTILITY COMPANIES.
2. ALL NEW POLE & ANCHOR LOCATIONS ARE TO BE STAKED OUT BY THE DEVELOPER'S SURVEYOR. COORDINATION REQUIRED WITH MECO'S ASSIGNED PLANNER.
3. DEVELOPER SHALL BE RESPONSIBLE FOR THE FULL COST TO RELOCATE MECO FACILITIES IF REQUIRED TO ADEQUATELY CLEAR ALL DRIVEWAYS & THEIR RESPECTIVE APPROACHES WHICH ARE NOT INDICATED ON THIS PLAN.
4. THE UTILITY COMPANY SHALL BE RESPONSIBLE TO VERIFY THE EXACT DEPTH AND LOCATION OF EXISTING WATERLINES IN THE PROJECT AREA PRIOR TO COMMENCEMENT OF WORK AND SHALL MEET WITH THE DEPARTMENT OF WATER SUPPLY PERSONNEL OUT IN THE FIELD TO HELP LOCATE THE EXISTING WATERLINES IN THE PROJECT AREA IF NECESSARY.
5. THE DEVELOPER OR ITS CONTRACTOR WILL BE RESPONSIBLE IN SUBMITTING LANDSCAPE PLANS IN THE PROXIMITY OF THE PROPOSED ELECTRICAL INFRASTRUCTURES AND/OR FACILITIES TO MECO-ENGINEERING FOR ITS REVIEW PRIOR TO THEIR ACCEPTANCE OF SAID INFRASTRUCTURES AND/OR FACILITIES.

PLAN NOTES:

1. EASEMENT REQUIRED FOR FACILITIES LOCATED IN PRIVATE PROPERTY (REFER TO MECO DWG.).
2. NEW UTILITY RISER POLE.
3. NEW POLE-MOUNTED TRANSFORMERS AND UTILITY RISERS.
4. NEW OVERHEAD LINE EXTENSION.
5. EXISTING UTILITY POLES TO REMAIN.

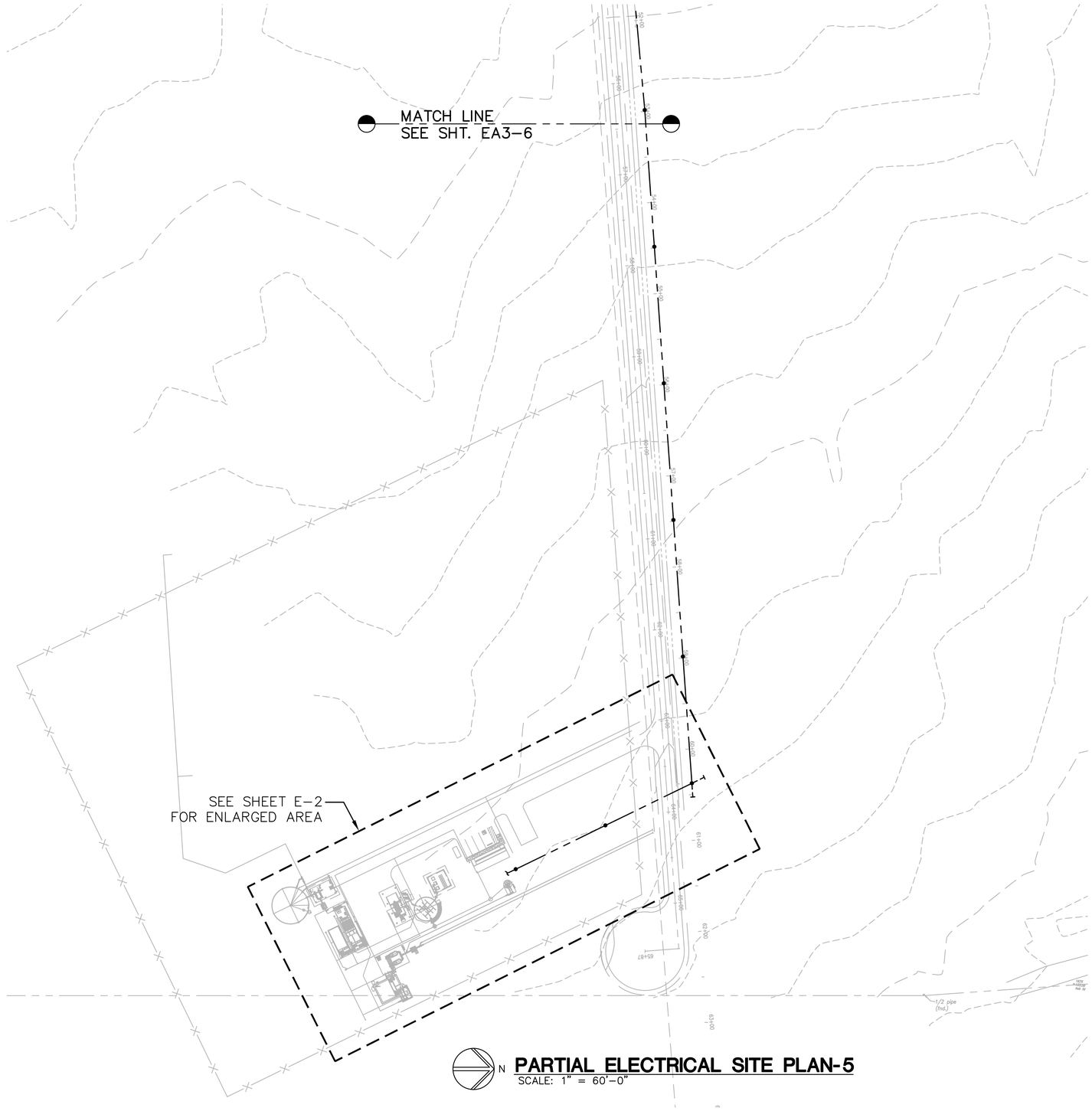

N **PARTIAL ELECTRICAL SITE PLAN-5**
SCALE: 1" = 60'-0"

JOB NO. O-11-056.004
FN: H:\ACAD2\2019-60.01 PULEHUNUI GRAVITY SEWER WWTP\DRAWINGS\PHASE A3\E-1.1R.DWG

AustinTsutsumi
& ASSOCIATES, INC.
CIVIL ENGINEERS I SURVEYORS
HONOLULU I WAILUKU I HILO, HAWAII

501 SUMNER STREET, SUITE 521
HONOLULU, HAWAII 96817

PHONE: 808-533-3646
FAX: 808-526-1267

STATE OF HAWAII
DEPARTMENT OF
HAWAIIAN HOME LANDS

PULEHUNUI
REGIONAL
INFUSTRUCTURE

AUSTIN, TSUTSUMI & ASSOC., INC.
ENGINEERS, SUVEYORS • HONOLULU, HAWAII

MARK P. RICKARD
LICENSED PROFESSIONAL ENGINEER
No. 8991-E
HAWAII, U.S.A.

This work was prepared by me or under my supervision and construction of this project will be under my observation. (Observation of construction as defined in Chapter 16-115 Subchapter 1 Definitions of the Hawaii Administrative Rules "Professional Engineers, Architects, Surveyors, and Landscape Architects.")

SIGNATURE — APRIL 30, 2020 — EXP. DATE OF THE LICENSE

0 1 2
LINE IS 2 INCHES AT FULL SIZE
(If NOT 2-inches : Scale Accordingly)

REVISION	DATE	BRIEF	BY

Project No:	16-576
Scale:	AS NOTED
Date:	1/22/19
Designed By:	MPR
Drawn By:	AKK
Checked By:	MPR

WWTF ACCESS ROAD
PARTIAL ELECTRICAL
SITE PLAN-5

DWG. NO.
EA3-7
SHEET OF XX

FILE	POCKET	FOLDER	NO.

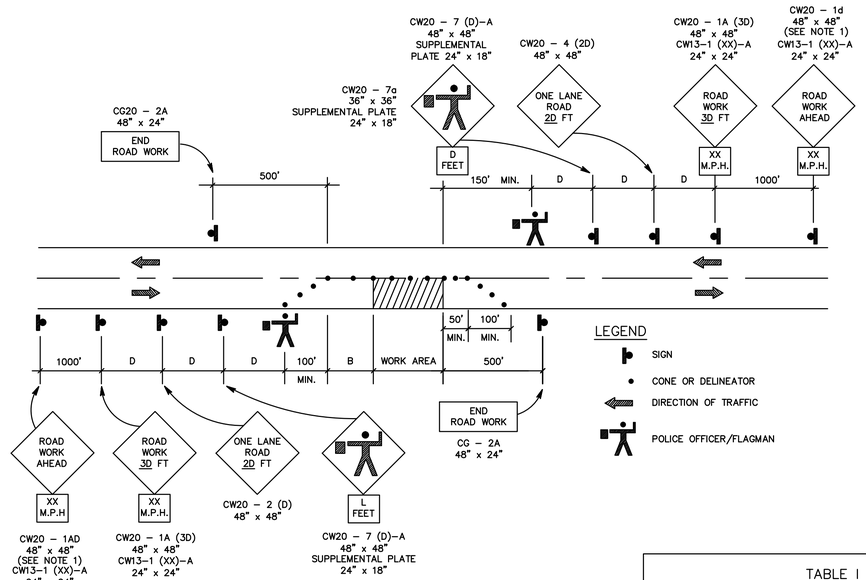

NOTES:

1. CW–20–1AD SIGN REQUIRED FOR POSTED SPEED LIMIT OF 45 M.P.H. OR GREATER.
2. SEE TABLE 1 FOR ADDITIONAL DIMENSIONS.
3. ONE LANE ROAD (CW–20–4) AND FLAGGER AHEAD (CW20–7) SIGNS SHALL BE REMOVED OR COVERED WHEN NO WORK IS BEING PREFORMED AND LANE IS NOT CLOSED.
4. THE ADVISORY SPEED (XX) SHALL BE DETERMINED BY THE ENGINEER.
5. CONES OR DELINEATORS SHALL BE INSTALLED AT 25' O.C. MAX. ON TAPERS.

TWO-LANE HIGHWAY - ONE LANE CLOSED
FIGURE I - TRAFFIC CONTROL PLAN

GENERAL NOTES FOR TRAFFIC CONTROL PLAN

1. THE PERMITTEE SHALL MAKE MINOR ADJUSTMENTS AT INTERSECTIONS, DRIVE–WAYS, BRIDGES, STRUCTURES, ETC., TO FIT FIELD CONDITIONS.
2. CONES OR DELINEATORS SHALL BE EXTENDED TO A POINT WHERE THEY ARE VISIBLE TO APPROACHING TRAFFIC.
3. TRAFFIC CONTROL DEVICES SHALL BE INSTALLED SUCH THAT THE SIGN OR DEVICE FARTHEST FROM THE WORK AREA SHALL BE PLACED FIRST. THE OTHERS SHALL THEN BE PLACED PROGRESSIVELY TOWARD THE WORK AREA.
4. REGULATORY AND WARNING SIGNS WITHIN THE CONSTRUCTION ZONE THAT ARE IN CONFLICT WITH THE TRAFFIC CONTROL PLANS SHALL BE REMOVED OR COVERED.
5. ALL SIGNS SHALL BE RESTORED UPON COMPLETION OF THE WORK.
6. FLAGGERS AND/OR POLICE OFFICERS SHALL BE IN SIGHT OF EACH OTHER OR IN DIRECT COMMUNICATIONS AT ALL TIMES.
7. WHEN REQUIRED BY THE ISSUING OFFICE, THE PERMITEE SHALL INSTALL A FLASHING ARROW SIGNAL AS SHOWN ON THE TRAFFIC CONTROL PLANS.
8. SIGNS SPACING (L), TAPER LENGTHS (T) AND SPACINGS OF CONES OR DELINEATORS SHALL BE AS SHOWN IN TABLE 1, UNLESS OTHERWISE NOTED ON THE TRAFFIC CONTROL PLANS.
9. ALL TRAFFIC LANES SHALL BE A MINIMUM OF 10 FEET WIDE.
10. ALL CONSTRUCTION WARNING SIGNS SHALL BE PROMPTLY REMOVED OR COVERED WHENEVER THE MESSAGE IS NOT APPLICABLE OR NOT IN USE.
11. THE BACKS OF ALL SIGNS USED FOR TRAFFIC CONTROL SHALL BE APPROPRIATELY COVERED TO PRECLUDE THE DISPLAY OF INAPPLICABLE SIGN MESSAGES (i.e. WHEN SIGNS HAVE MESSAGES ON BOTH FACES).
12. AT THE END OF EACH DAY'S WORK OR AS SOON AS THE WORK IS COMPLETED, THE PERMITTEE SHALL REMOVE ALL TRAFFICE CONTROL DEVICES NO LONGER NEEDED TO PERMIT FREE AND SAFE PASSAGE OF PUBLIC TRAFFIC. REMOVAL SHALL BE IN THE REVERSE ORDER OR INSTALLATION.
13. REPLACE PERMANENT PAVEMENT MARKINGS AND TRAFFIC SIGNS UPON COMPLETION OF WORK.

TABLE I FOR TRAFFIC CONTROL PLAN

POSTED SPEED LIMIT (M.P.H.)	SIGN SPACING (D) FEET	TAPER LENGTH (T) (FEET)		LONGITUDINAL BUFFER SPACE (B) (FEET)	SPACING OF CONES OR DELINEATORS (FEET)		
		W = 12' OR LESS ①	W = GREATER THAN 12' ①		TAPER	TANGENT	WORK AREA
20	250	200	W x 17	35	20	20	10
25	250	200	W x 17	55	25	25	10
30	250	250	W x 20	85	30	30	10
35	250	250	W x 20	120	35	35	10
40	500	350	W x 30	170	40	40	10
45	500	550	W x 45	220	45	45	10
50	1000	600	W x 50	280	50	50	10
55	1000	700	W x 55	335	55	55	10

NOTES:

① W = WIDTH OF LANE, SHOULDER, OR OFFSET

TRAFFIC CONTROL PLAN
NOT TO SCALE

CONTRUCTION NOTES WITHIN COUNTY RIGHT–OF–WAY

1. CONTRACTOR SHALL OBTAIN A PERMIT TO PERFORM WORK ON COUNTY HIGHWAYS FROM THE DEVELOPMENT SERVICES ADMINISTRATION TWO WEEKS PRIOR TO THE COMMENCEMENT OF WORK.
2. STANDARD DETAIL DRAWINGS AND STANDARD SPECIFICATIONS OF THE DEPARTMENT OF PUBLIC WORKS SHALL BE INCLUDED AS PART OF THE CONSTRUCTION PLANS.
3. ALL CONSTRUCTION WORK SHALL STRICTLY CONFORM TO THE LATEST VERSION OF THE HAWAII STANDARD SPECIFICATIONS FOR ROAD AND BRIDGE PUBLIC WORKS CONSTRUCTION, AND THE SEPTEMBER 1984 "STANDARD DETAILS" FOR PUBLIC WORKS CONSTRUCTION OF THE DEPARTMENT OF PUBLIC WORKS, AS AMENDED.
4. IF EXISTING UTILITIES, WHETHER OR NOT SHOWN ON PLANS, ARE DAMAGED DURING CONSTRUCTION, THE CONTRACTOR SHALL AT HIS OWN EXPENSE BE REQUIRED TO REPAIR SUCH UTILITIES.
5. CONTRACTOR SHALL PROVIDE, INSTALL AND MAINTAIN ALL NECESSARY SIGNS, LIGHTS, FLARES, BARRICADES, AND OTHER PROTECTIVE DEVICES FOR THE PROTECTION, SAFETY AND CONVENIENCE OF THE PUBLIC, ACCORDING TO THE LATEST VERSION OF THE "MANUAL ON UNIFORM TRAFFIC CONTROL DEVICE FOR STREETS AND HIGHWAYS", AND TO THE RULES AND REGULATIONS GOVERNING THE USE OF TRAFFIC CONTROL DEVICES AT WORKSITES AND/OR ADJACENT TO PUBLIC STREETS AND HIGHWAYS ADOPTED BY THE HIGHWAY SAFETY COORDINATOR AND THE U.S. FEDERAL HIGHWAY ADMINISTRATION "MANUAL ON UNIFORM TRAFFIC CONTROL DEVICES FOR HIGHWAY CONSTRUCTION AND MAINTENANCE OPERATIONS".
6. THE DIRECTOR PUBLIC WORKS AND/OR THE DIRECTOR OF THE DEPARTMENT OF WATER SUPPLY HAS THE RIGHT TO STOP CONSTRUCTION SHOULD ANY WORK BE FOUND CONTRARY TO THE APPROVED CONSTRUCTION PLAN OR DETRIMENTAL TO THE PUBLIC'S INTEREST.
7. THE CONTRACTOR SHALL SCHEDULE A PRE–CONSTRUCTION MEETING WITH THE DEVELOPMENT SERVICES ADMINISTRATION FIVE (5) DAYS PRIOR TO COMMENCEMENT OF CONSTRUCTION.
8. THE CONTRACTOR SHALL, AT HIS OWN EXPENSE, KEEP THE PROJECT AREA AND SURROUNDING AREA FREE FROM DUST NUISANCE. THE WORK SHALL BE IN CONFORMANCE WITH AIR POLLUTION CONTROL STANDARDS AND REGULATIONS OF THE STATE DEPARTMENT OF HEALTH AND COUNTY GRADING ORDINANCE.
9. THE CONTRACTOR SHALL REMOVE ALL SILT AND DEBRIS RESULTING FROM HIS WORK AND DEPOSITED IN DRAINAGE FACILITIES, ROADWAYS AND OTHER AREAS. THE COST INCURRED FOR ANY NECESSARY REMEDIAL ACTION ORDERED BY THE DIRECTOR OF PUBLIC WORKS SHALL BE PAID BY THE CONTRACTOR.
10. CONSTRUCTION DEBRIS AND WASTES SHALL BE DEPOSITED AT AN APPROPRIATE WORK SITE. THE CONTRACTOR SHALL INFORM THE DIRECTOR OF PUBLIC WORKS OF THE LOCATION OF THE DISPOSAL SITES. THE DISPOSAL SITE MUST FULFILL THE REQUIREMENTS OF THE GRADING ORDINANCE.
11. THE CONTRACTOR SHALL SUBMIT A TIFF AND FIVE (5) COPIES OF THE "AS–BUILT" DRAWINGS PRIOR TO THE FINAL APPROVAL OF THE IMPROVEMENTS.
12. IF THE CLEARANCE BETWEEN A WASTEWATER LINE AND A NEW OR EXISTING WATERLINE IS EIGHTEEN INCHES (18") OR LESS, THE WASTEWATER LINE SHALL BE CONCRETE–JACKETED IN ACCORDANCE WITH THE STANDARD DETAILS OF PUBLIC WORKS CONSTRUCTION DATED SEPTEMBER 1984, AS AMENDED.
13. SHOULD HISTORIC SITES SUCH AS WALLS, PLATFORMS, PAVEMENTS, OR MOUNDS, OR REMAINS SUCH AS ARTIFACTS BURIALS, CONCENTRATION OF SHELL OR CHARCOAL BE ENCOUNTERED DURING CONSTRUCTION ACTIVITIES, WORK SHALL CEASE IMMEDIATELY IN THE IMMEDIATE VICINITY OF THE FIND AND THE FIND SHALL BE PROTECTED FROM FURTHER DAMAGE. THE CONTRACTOR AND/OR LANDOWNER SHALL IMMEDIATELY CONTACT THE STATE HISTORIC PRESERVATION DIVISION (692–8015), WHICH WILL ASSESS THE SIGNIFICANCE OF THE FIND AND RECOMMEND AN APPROPRIATE MITIGATION MEASURE, IF NECESSARY.
14. PURSUANT OF MAUI COUNTY CODE SECTION 3.44.015(C), THE COUNTY OF MAUI IS NOT RESPONSIBLE FOR ANY PARK, ROADWAY, EASEMENT (INCLUDING BUT NOT LIMITED TO DRAINAGE, SEWER, ACCESS, RECLAIMED WATER, OR AVIGATION EASEMENT), OR ANY OTHER INTEREST IN REAL PROPERTY SHOWN ON THIS MAP OR SHOWN ON THESE PLANS, UNLESS THE MAUI COUNTY COUNCIL HAS ACCEPTED ITS DEDICATION BY A RESOLUTION APPROVED BY A MAJORITY OF COUNCIL'S MEMBERS AT A REGULAR OR SPECIAL MEETING OF THE MAUI COUNTY COUNCIL.
15. STEEL PLATE WARNING SIGNS ARE REQUIRED FOR ALL STEEL PLATES IN THE RIGHT–OF–WAY.
16. WHEELCHAIR RAMP INSPECTION/CERTIFICATION FORMS SHALL BE REQUIRED FOR ALL NEWLY CONSTRUCTED RAMPS.
17. ALL STRIPING AND PAVEMENT MARKINGS SHALL BE OF THERMOPLASTIC MATERIAL.
18. COMPACTION REQUIREMENTS
    a. TESTING OF MATERIALS SHALL BE CONDUCTED BY AN APPROVED INDEPENDENT TESTING AGENCY IN ACCORDANCE WITH ASTM STANDARD METHODS OR AS SPECIFIED BY THE DEPARTMENT OF PUBLIC WORKS, ENGINEERING DIVISION, AS FOLLOWS:
    i. EMBANKMENT/SELECT BORROW AND SUBGRADE MATERIALS: ONE (1) COMPACTION TEST PER 600 SQUARE YARDS PER LIFT;
    ii. AGGREGATE SUBBASE COURSE: ONE (1) COMPACTION TEST PER 400 SQUARE YARDS; ONE (1) GRADATION AND SAND EQUIVALENT TEST PER LIFT PER PROJECT;
    iii. AGGREGATE BASE COURSE: ONE (1) COMPACTION TEST PER 300 SQUARE YARDS; ONE (1) GRADATION AND SAND EQUIVALENT TEST PER LIFT PER PROJECT;
    iv. ASPHALT CONCRETE PAVEMENT OR ASPHALT TREATED BASE COURSE; THREE (3) A.C. CORES FOR THICKNESS AN DENSITY TESTS PER PROJECT;
    v. TRENCH BACKFILL MATERIAL: ONE (1) TEST FOR EACH 300 LINEAL FEET OF TRENCH PER LIFT OF MATERIAL.
    b. CONTRACTOR SHALL SUBMIT ALL TESTING REPORTS INCLUDING RESULTS TO THE COUNTY'S INSPECTION AGENCY FOR REVIEW AND APPROVAL PRIOR TO COUNTY'S ACCEPTANCE OF WORK.
    c. THE CONTRACTOR SHALL BE REQUIRED TO NOTIFY THE COUNTY OF ANY TESTING FAILURES AND CORRECT EACH FAILURE PRIOR TO PROCEEDING TO THE NEXT PHASE OF CONSTRUCTION.

GENERAL NOTES:

1. PLANS SUBJECT TO REVIEW AND APPROVAL OF UTILITY COMPANIES.
2. THE CONTRACTOR/UTILITY COMPANY SHALL CONTACT THE DEPARTMENT OF WATER SUPPLY AT PHONE # 270–7340 ONE (1) WEEK PRIOR TO COMMENCEMENT OF WORK.
3. THE CONTRACTOR/UTILITY COMPANY SHALL BE RESPONSIBLE TO VERIFY THE EXACT DEPTH AND LOCATION OF EXISTING WATERLINES IN THE PROJECT AREA PRIOR TO COMMENCEMENT OF WORK AND SHALL MEET WITH THE DEPARTMENT OF WATER SUPPLY PERSONNEL OUT IN THE FIELD TO HELP LOCATE THE EXISTING WATERLINES IN THE PROJECT AREA IF NECESSARY.
4. MAINTAIN A MINIMUM OF THREE (3) FEET CLEAR HORIZONTAL SEPARATION BETWEEN EXISTING WATERLINES AND INSTALLED UTILITIES.
5. MAINTAIN A MINIMUM OF SIX (6) INCHES CLEAR VERTICAL SEPARATION BETWEEN EXISTING WATERLINES AND INSTALLED UTILITIES AT ALL CROSSINGS.
6. ANY INSTALLED UTILITY CROSSING AN EXISTING WATERLINE SHALL BE CONCRETE JACKETED A MINIMUM OF FIVE (5) FEET ON BOTH SIDES OF THE CROSSING.

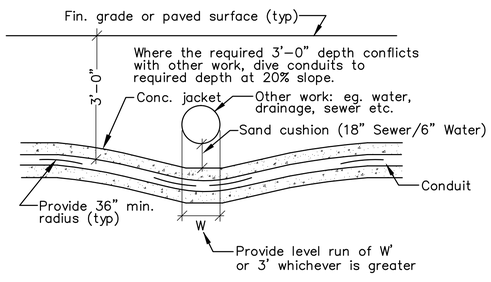

TYPICAL DUCTS CROSSING UNDER OTHER WORK
NOT TO SCALE

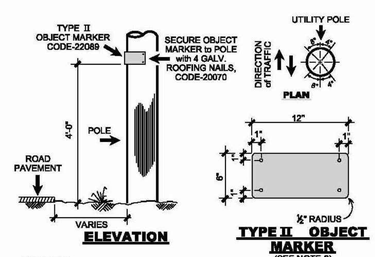

NOTES:

1. THE TYPE II OBJECT MARKER (OM2-2H, 12"x6", per MUTCD 2003) shall be made of HIGH INTENSITY AMBER REFLECTIVE SHEETING MATERIAL OVERLAYED on 0.020" ALUMINUM SHEETING.
2. INSTALL TWO(2) OBJECT MARKERS: ONE ON EACH SIDE OF POLE FACING ONCOMING TRAFFIC AS SHOWN ON THIS PLAN VIEW.

COUNTY REQUIRED TYPE II MARKER

DEPARTMENT OF WATER SUPPLY NOTES:

1. THE CONTRACTOR SHALL CONTACT THE DWS (PH# 243-7633) PRIOR TO COMMENCEMENT OF WORK.
2. THE CONTRACTOR SHALL CONTACT THE DWS FOR THE EXACT DEPTH AND LOCATION OF EXISTING WATERLINES. SERVICE LATERALS, AND APPURTENANCES TO BE DETERMINED IN THE FIELD.
3. IT SHALL BE THE CONTRACTOR'S RESPONSIBILITY TO LOCATE SAME (ITEM #2) PRIOR TO TRENCHING. FACILITIES DAMAGED BY THE CONTRACTOR'S OPERATION SHALL BE REPAIRED IMMEDIATELY BY THE CONTRACTOR AT HIS/HER EXPENSE.
4. KEEP 3 FEET MINIMUM HORIZONTAL CLEARENCE AND / OR 6 INCH MINIMUM VERTICAL CLEARANCE BETWEEN EXISTING WATER SYSTEM IMPROVEMENTS AND ELECTRICAL UTILITIES.
5. ANY ELECTRICAL CONDUIT, WHEN INDEPENDENTLY INSTALLED AND CROSSING AN EXISTING WATERLINE, GAS, OIL, OR OTHER PIPE SYSTEMS, SHALL BE CONCRETE JACKETED 5 FEET OF BOTH SIDES OF CROSSING IF IT IS SEPARATED BY LESS THAN 6 INCHES.

APPROVALS:

DIRECTOR – DEPARTMENT OF PUBLIC WORKS (APPROVAL FOR WORK WITHIN COUNTY RIGHT OF WAY ONLY) — DATE

DIRECTOR – DEPARTMENT OF ENVIRONMENTAL MANAGEMENT (APPROVAL FOR WORK WITHIN COUNTY RIGHT OF WAY ONLY) — DATE

DIRECTOR – DEPARTMENT OF WATER SUPPLY. COUNTY OF MAUI (APPROVAL LIMITED TO WATER IMPROVEMENTS WHICH WILL BE DEDICATED TO THE DEPARTMENT OF WATER SUPPLY) — DATE

AustinTsutsumi & ASSOCIATES, INC.
CIVIL ENGINEERS I SURVEYORS
HONOLULU I WAILUKU I HILO, HAWAII
501 SUMNER STREET, SUITE 521
HONOLULU, HAWAII 96817
PHONE: 808-533-3646
FAX: 808-526-1267

STATE OF HAWAII
DEPARTMENT OF
HAWAIIAN HOME LANDS

PULEHUNUI
REGONIAL
INFUSTRUCTURE

AUSTIN, TSUTSUMI & ASSOC., INC.
ENGINEERS, SUVEYORS • HONOLULU, HAWAII

MARK P. RICKARD
LICENSED PROFESSIONAL ENGINEER
No. 8991–E
HAWAII, U.S.A.

This work was prepared by me or under my supervision and construction of this project will be under my observation. (Observation of construction as defined in Chapter 16-115 Subchapter 1 Definitions of the Hawaii Administrative Rules "Professional Engineers, Architects, Surveyors, and Landscape Architects.")

SIGNATURE — APRIL 30, 2020 EXP. DATE OF THE LICENSE

0 1 2
LINE IS 2 INCHES AT FULL SIZE
(If NOT 2–inches : Scale Accordingly)

REVISION	DATE	BRIEF	BY

Project No:	16-576
Scale:	AS NOTED
Date:	1/22/19
Designed By:	MPR
Drawn By:	RMB
Checked By:	MPR

PHASE A4 – DHHL
SOUTH PUMP
STATION
NOTES & DETAILS

DWG. NO.
EA4-1
SHEET OF XX

FILE	POCKET	FOLDER	NO.

JOB NO. 0–11–056.004
FN: H:\ACAD2\2019–60 PULEHUNUI NORTH AND SOUTH PUMP STATIONS\SOUTH PUMP STATION\E–0.DWG

SYMBOL LEGEND

- NEW MECO 150W HPS ST. LIGHT ON WOOD POLE, FULLY CUT-OFF
- NEW 3ø PRIMARY OVERHEAD LINE
- EXISTING OVERHEAD LINE
- NEW POLE MOUNTED TRANSFORMER BANK (3PH)
- EXISTING UTILITY POLE
- NEW UTILITY POLE
- EXISTING UTILITY ANCHOR
- NEW UTILITY ANCHOR
- NEW DUCTS
- T — TELEPHONE DUCTS, QTY. AND SIZE AS INDICATED
- ES — ELECTRICAL DUCTS, QTY AND SIZE AS INDICATED
- NEW METERING EQUIPMENT (SEE SHEET E-4)

GENERAL NOTES:

1. PLANS SUBJECT TO REVIEW AND APPROVAL OF UTILITY COMPANIES.
2. ALL NEW POLE & ANCHOR LOCATIONS ARE TO BE STAKED OUT BY THE DEVELOPER'S SURVEYOR. COORDINATION REQUIRED WITH MECO'S ASSIGNED PLANNER.
3. DEVELOPER SHALL BE RESPONSIBLE FOR THE FULL COST TO RELOCATE MECO FACILITIES IF REQUIRED TO ADEQUATELY CLEAR ALL DRIVEWAYS & THEIR RESPECTIVE APPROACHES WHICH ARE NOT INDICATED ON THIS PLAN.
4. THE UTILITY COMPANY SHALL BE RESPONSIBLE TO VERIFY THE EXACT DEPTH AND LOCATION OF EXISTING WATERLINES IN THE PROJECT AREA PRIOR TO COMMENCEMENT OF WORK AND SHALL MEET WITH THE DEPARTMENT OF WATER SUPPLY PERSONNEL OUT IN THE FIELD TO HELP LOCATE THE EXISTING WATERLINES IN THE PROJECT AREA IF NECESSARY.
5. THE DEVELOPER OR ITS CONTRACTOR WILL BE RESPONSIBLE IN SUBMITTING LANDSCAPE PLANS IN THE PROXIMITY OF THE PROPOSED ELECTRICAL INFRASTRUCTURES AND/OR FACILITIES TO MECO-ENGINEERING FOR ITS REVIEW PRIOR TO THEIR ACCEPTANCE OF SAID INFRASTRUCTURES AND/OR FACILITIES.

PLAN NOTES:

1. EASEMENT REQUIRED FOR FACILITIES LOCATED IN PRIVATE PROPERTY (REFER TO MECO DWG.).
2. NEW UTILITY RISER POLE.
3. NEW POLE-MOUNTED TRANSFORMERS AND UTILITY RISERS.
4. NEW OVERHEAD LINE EXTENSION.
5. EXISTING UTILITY POLES TO REMAIN.

A UTILITY CO. STANDBY MAN IS REQUIRED TO BE AT THE SITE AT THE TIME ANY NON-UTILITY CO. PERSONNEL WILL BE BREAKING INTO OR ENTERING ANY FACILITIES THAT CONTAIN ENERGIZED UTILITY CO. EQUIPMENT OR CABLES.

THREE WORKING DAYS ADVANCE NOTICE IS REQUIRED BY THE UTILITY CO. FOR ANY INSPECTION SERVICE OR STANDBY MAN.

CALL MECO -- PH: 871-7777

NOTE:
SHOULD HISTORIC SITES SUCH AS WALLS, PLATFORMS, PAVEMENTS AND MOUNDS, OR REMAINS SUCH AS ARTIFACTS, BURIALS, CONCENTRATION OF CHARCOAL OR SHELLS ARE ENCOUNTERED DURING CONSTRUCTION WORK, WORK SHALL CEASE IN THE IMMEDIATE VICINITY OF THE FIND AND THE FIND SHALL BE PROTECTED FROM FURTHER DAMAGE. THE CONTRACTOR SHALL IMMEDIATELY CONTACT THE STATE HISTORIC PRESERVATION DIVISION (692-8023), WHICH WILL ASSESS THE SIGNIFICANCE OF THE FIND AND RECOMMEND AN APPROPRIATE MITIGATION MEASURE, IF NECESSARY.

APPROVALS:

MAUI ELECTRIC COMPANY	DATE
HAWAIIAN TELCOM	DATE
SPECTRUM	DATE

NOTE: PLAN NOT FOR CONSTRUCTION UNLESS APPROVED

N **LOCATION MAP**
NOT TO SCALE

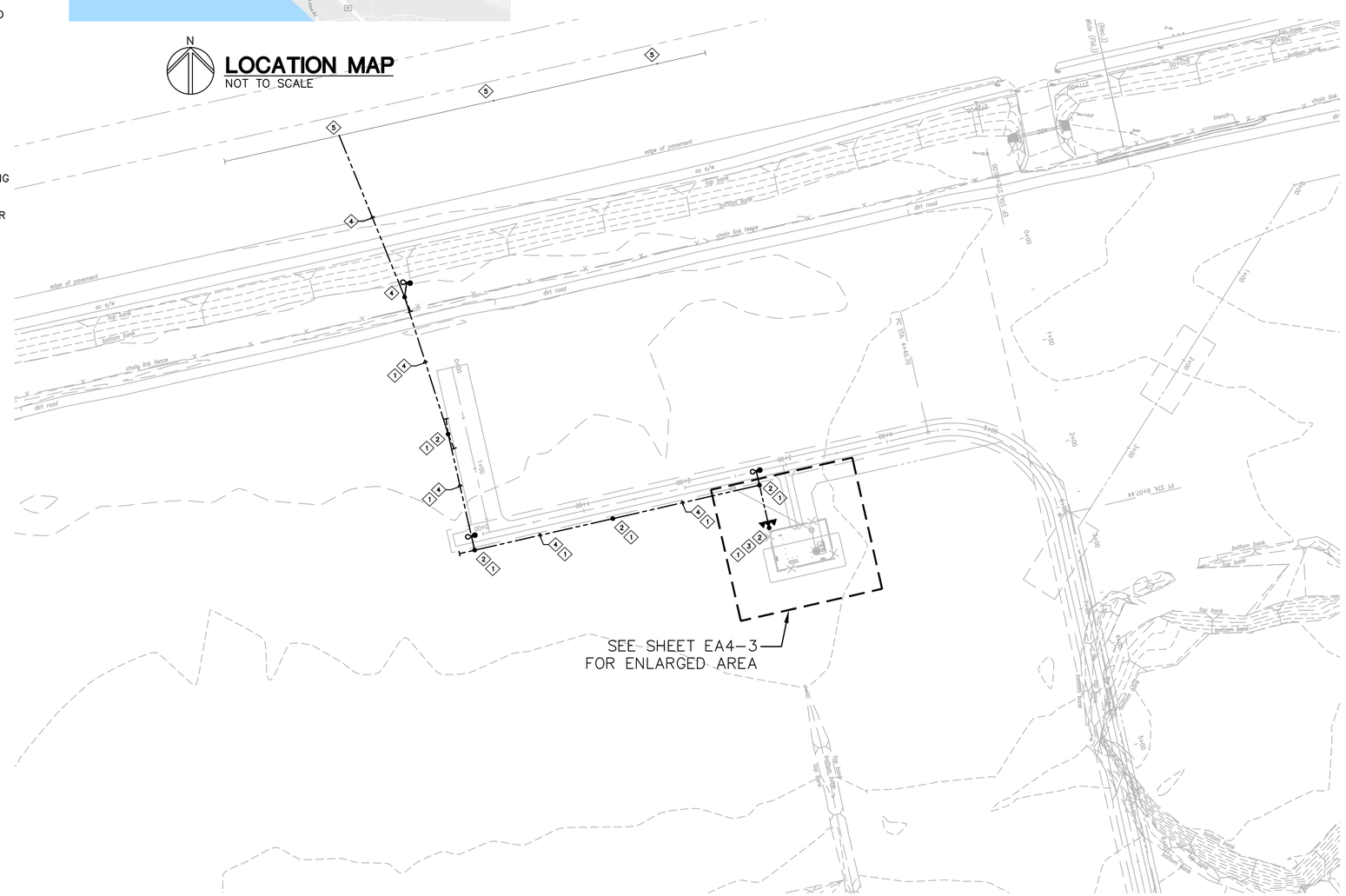

N **ELECTRICAL SITE PLAN**
SCALE: 1" = 60'-0"

AustinTsutsumi & ASSOCIATES, INC.
CIVIL ENGINEERS I SURVEYORS
HONOLULU I WAILUKU I HILO, HAWAII
501 SUMNER STREET, SUITE 521
HONOLULU, HAWAII 96817
PHONE: 808-533-3646
FAX: 808-526-1267

STATE OF HAWAII
DEPARTMENT OF
HAWAIIAN HOME LANDS

PULEHUNUI
REGONIAL
INFUSTRUCTURE

AUSTIN, TSUTSUMI & ASSOC., INC.
ENGINEERS, SUVEYORS • HONOLULU, HAWAII

MARK P. RICKARD
LICENSED PROFESSIONAL ENGINEER
No. 8991-E
HAWAII, U.S.A.

This work was prepared by me or under my supervision and construction of this project will be under my observation. (Observation of construction as defined in Chapter 16-115 Subchapter 1 Definitions of the Hawaii Administrative Rules "Professional Engineers, Architects, Surveyors, and Landscape Architects.")

SIGNATURE — APRIL 30, 2020 EXP. DATE OF THE LICENSE

0 1 2
LINE IS 2 INCHES AT FULL SIZE
(If NOT 2-inches : Scale Accordingly)

REVISION	DATE	BRIEF	BY

Project No:	16-576
Scale:	AS NOTED
Date:	1/22/19
Designed By:	MPR
Drawn By:	RMB
Checked By:	MPR

SOUTH PUMP STATION ELECTRICAL SITE PLAN, SYMBOL LEGEND, NOTES

DWG. NO.
EA4-2
SHEET OF XX

FILE	POCKET	FOLDER	NO.

JOB NO. 0-11-056.004
FN: H:\ACAD2\2019-60 PULEHUNUI NORTH AND SOUTH PUMP STATIONS\SOUTH PUMP STATION\E-1.DWG

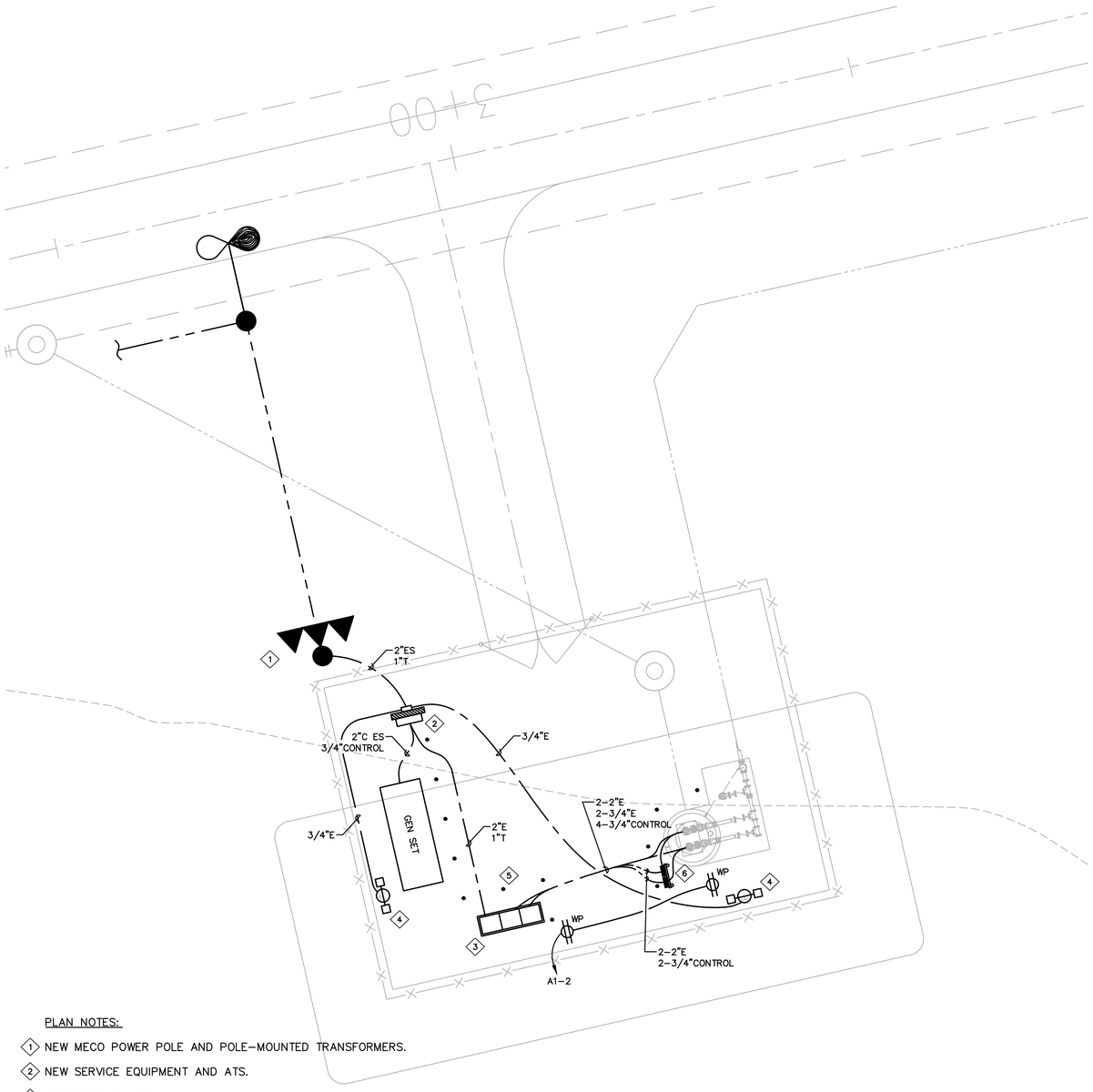

PLAN NOTES:

1. NEW MECO POWER POLE AND POLE-MOUNTED TRANSFORMERS.
2. NEW SERVICE EQUIPMENT AND ATS.
3. MCC (BY OTHERS).
4. NEW LIGHTS.
5. PIPE STANCHIONS (TYPICAL).
6. (2) VFD ON STAINLESS STEEL FRAME.

N

SOUTH PUMP - ELECTRICAL PLAN

SCALE: 1" = 60'-0"

COUNTY OF MAUI
MAUI COUNTY CODE, CHAPTER 16.16B ENERGY CODE
(2015 IECC) COMMERCIAL PROVISIONS

COMPLIANCE METHOD
Check applicable method

☐	C401.2(1) ANSI/ASHRAE/IESNA 90.1
☒	C401.2(2) Section C405
☐	C401.2(3) Sections C405.2, 405.3, C405.4, C405.6 & C407
☐	C102.1 Alternative

To the best of my knowledge, this project's design substantially conforms to the Energy Code.

Signature: _____ Date: _____
Name: MARK P. RICKARD
Title: PROJECT ENGINEER
License No.: 8891-E

MAUI COUNTY CODE CHAPTER 20.35
OUTDOOR LIGHTING

THE ELECTRICAL OUTDOOR LIGHTING SYSTEM AND EQUIPMENT HAVE BEEN REVIEWED BY ME AN TO THE BEST OF MY KNOWLEDGE, THIS DESIGN SUBSTANTIALLY CONFORMS TO THE REQUIREMENTS SPECIFIED IN MAUI COUNTY CODE CHAPTER 20.35 OUTDOOR LIGHTING.

SIGNATURE	PROJECT ENGINEER TITLE
MARK P. RICKARD NAME (PRINT)	8991-E STATE OF HAWAII P.E. LICENSE NUMBER

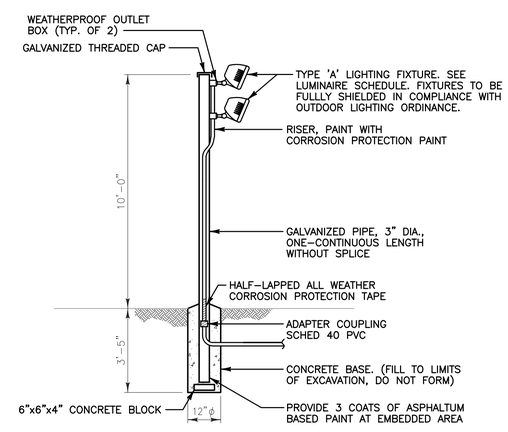

FLOODLIGHT DETAIL

NOT TO SCALE

AustinTsutsumi
& ASSOCIATES, INC.
CIVIL ENGINEERS I SURVEYORS
HONOLULU I WAILUKU I HILO, HAWAII

501 SUMNER STREET, SUITE 521
HONOLULU, HAWAII 96817

PHONE: 808-533-3646
FAX: 808-526-1267

STATE OF HAWAII
DEPARTMENT OF
HAWAIIAN HOME LANDS

PULEHUNUI
REGONIAL
INFUSTRUCTURE

AUSTIN, TSUTSUMI & ASSOC., INC.
ENGINEERS, SUVEYORS • HONOLULU, HAWAII

MARK P. RICKARD
LICENSED PROFESSIONAL ENGINEER
No. 8991-E
HAWAII, U.S.A.

This work was prepared by me or under my supervision and construction of this project will be under my observation. (Observation of construction as defined in Chapter 16-115 Subchapter 1 Definitions of the Hawaii Administrative Rules "Professional Engineers, Architects, Surveyors, and Landscape Architects.")

SIGNATURE — APRIL 30, 2020 EXP. DATE OF THE LICENSE

0 1 2
LINE IS 2 INCHES AT FULL SIZE
(If NOT 2-inches : Scale Accordingly)

REVISION	DATE	BRIEF	BY

Project No:	16-576
Scale:	AS NOTED
Date:	1/22/19
Designed By:	MPR
Drawn By:	RMB
Checked By:	MPR

SOUTH PUMP STATION
ELECTRICAL PLAN

DWG. NO.
EA4-3
SHEET OF XX

FILE	POCKET	FOLDER	NO.

JOB NO. 0-11-056.004
FN: H:\ACAD2\2019-60 PULEHUNUI NORTH AND SOUTH PUMP STATIONS\SOUTH PUMP STATION\E-2.DWG

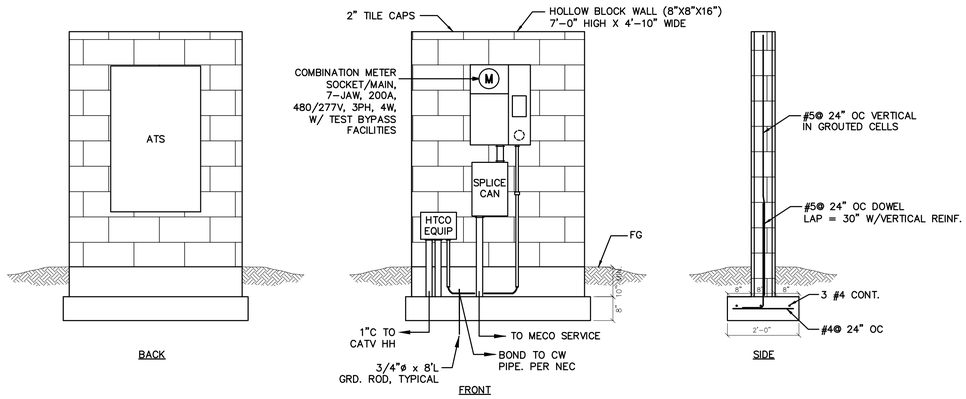

GENERAL ARRANGEMENT OF SERVICE CONTROL PANEL EQUIPMENT (IRRIGATION)

SCALE: = 1/2" = 1'-0"

LOAD CALCULATIONS:
SERVICE: 480/277V, 3 PHASE, 4 WIRE

PUMPS (2-72HP) 1 @ 125% & 1 @ 100%	=	146 KVA
MISC. LIGHTS/RCPT.	=	10 KVA
TOTAL LOAD	=	156 KVA
	=	187.6 AMPS @ 480V, 3PH

PANEL A (IN MCC)

A.I.C. RATING: 10K

VOLTAGE: 120/240V PHASE: 1 WIRE: 3WSN CIRCUITS: 18

MOUNTING: SURFACE MAIN BRKR: 2P30 BREAKER: BOLT ON MAIN BUS: 30A

CKT	DESCRIPTION	PHASE A	PHASE B	BRKR	WIRE	CKT	DESCRIPTION	PHASE A	PHASE B	BRKR	WIRE
1	L: ENCL/EXT LIGHTS	0.6		1P20	#12	2	SPARE			1P20	
3	R: RECEPTACLE		0.2	1P20	#12	4	SPARE			1P20	
5	SCADA	1.0		1P20	#12	6	SPARE			1P20	
7	HEATER - MCC		0.4	1P20	#12	8	PFB				
9	FANS	0.1		1P20	#12	10	PFB				
11	HEATER - PUMPS		0.5	1P20	#12	12	PFB				
13	R: SCADA RCPT	0.2		1P20	#12	14	PFB				
15	R: SCADA RCPT		0.2	1P20	#12	16	PFB				
17	R: PUMP RCPT	0.2		1P20	#12	18	PFB				
	TOTALS	2.1	1.1				TOTALS	0.0	0.0		

TOTAL CONNECTED LOAD: 3.2 KVA
ESTIMATED DEMAND: 1.0
TOTAL EST. DEMAND LOAD: 3.2 KVA 13 A @ V =240V

R: DENOTES RECEPTACLE LOAD
L: DENOTES LIGHTING LOAD

LIGHT FIXTURE SCHEDULE

TYPE	SYMBOL	DESCRIPTION	MANUFACTURER	LAMP
A	▷	COMPACT FLOOD, DIE CAST ALUMINUM, WET LOCATION, CORROSION RESISTANT, BRONZE FINISH, POLYCARBONATE SHIELD	HUBBELL LFS-12LD-5K-M-BZ-SPC OR APPROVED EQUAL	15W LED 5000K

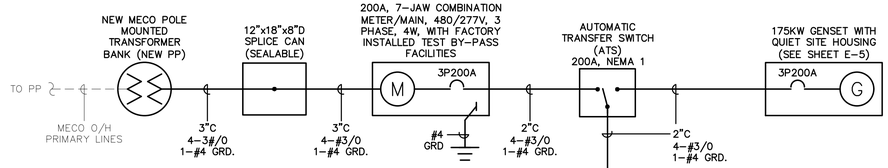

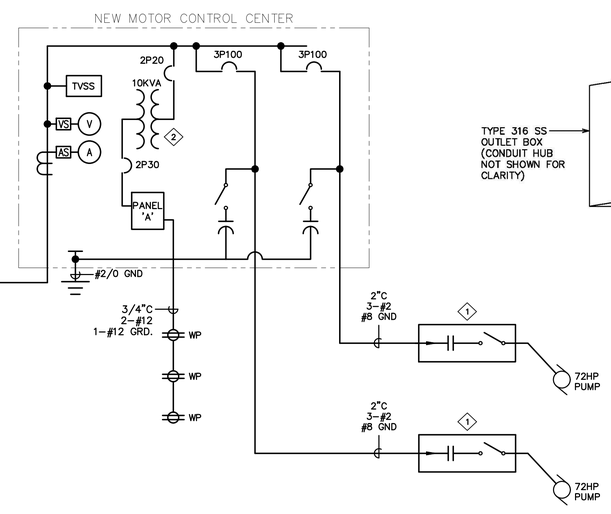

GENERAL NOTES:

1. ALL EQUIPMENT TO BE NEMA 4X.
2. ALL EQUIPMENT SHALL BE CAPABLE OF BEING LOCKED OUT AND TAGGED OUT.
3. ALL EQUIPMENT SHALL BE SQUARE D OR CUTLER HAMMER

NOTES:

1. VFD MOTOR STARTER WITH DISCONNECT, PROVIDED BY PUMP SUPPLIER).
2. 10 KVA MINI POWER ZONE TRANSFORMER AND INTERGRAL PANEL. 480V PRI, 120/240V SECONDARY, 1 PHASE, 3 WIRE, 10 SPACE PANEL, NEMA 3R (SQUARE D MPZ 10S40F).

SINGLE-LINE DIAGRAM

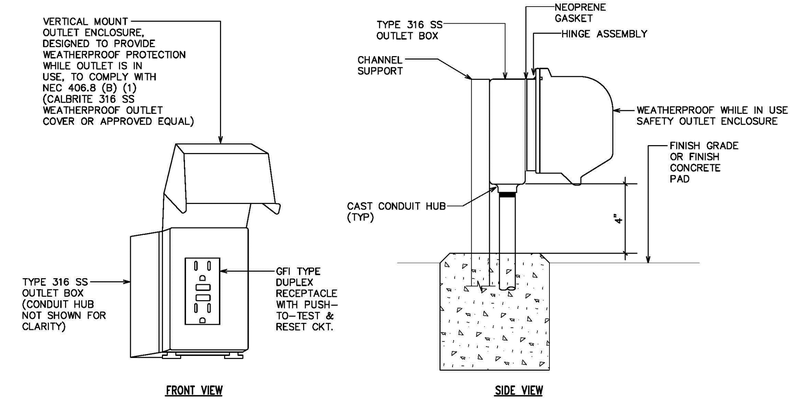

WEATHERPROOF RECEPTACLE DETAIL

NOT TO SCALE

AustinTsutsumi & ASSOCIATES, INC.
CIVIL ENGINEERS I SURVEYORS
HONOLULU I WAILUKU I HILO, HAWAII

501 SUMNER STREET, SUITE 521
HONOLULU, HAWAII 96817

PHONE: 808-533-3646
FAX: 808-526-1267

STATE OF HAWAII
DEPARTMENT OF
HAWAIIAN HOME LANDS

PULEHUNUI
REGONIAL
INFUSTRUCTURE

AUSTIN, TSUTSUMI & ASSOC., INC.
ENGINEERS, SUVEYORS • HONOLULU, HAWAII

MARK P. RICKARD
LICENSED PROFESSIONAL ENGINEER
No. 8991-E
HAWAII, U.S.A.

This work was prepared by me or under my supervision and construction of this project will be under my observation. (Observation of construction as defined in Chapter 16-115 Subchapter 1 Definitions of the Hawaii Administrative Rules "Professional Engineers, Architects, Surveyors, and Landscape Architects.")

SIGNATURE APRIL 30, 2020
EXP. DATE OF THE LICENSE

0 1 2
LINE IS 2 INCHES AT FULL SIZE
(If NOT 2-inches : Scale Accordingly)

REVISION	DATE	BRIEF	BY

Project No:	16-576
Scale:	AS NOTED
Date:	1/22/19
Designed By:	MPR
Drawn By:	RMB
Checked By:	MPR

SOUTH PUMP STAION DETAILS

DWG. NO.
EA4-4
SHEET OF XX

FILE	POCKET	FOLDER	NO.

JOB NO. 0-11-056.004
FN: H:\ACAD2\2019-60 PULEHUNUI NORTH AND SOUTH PUMP STATIONS\SOUTH PUMP STATION\E-3.DWG

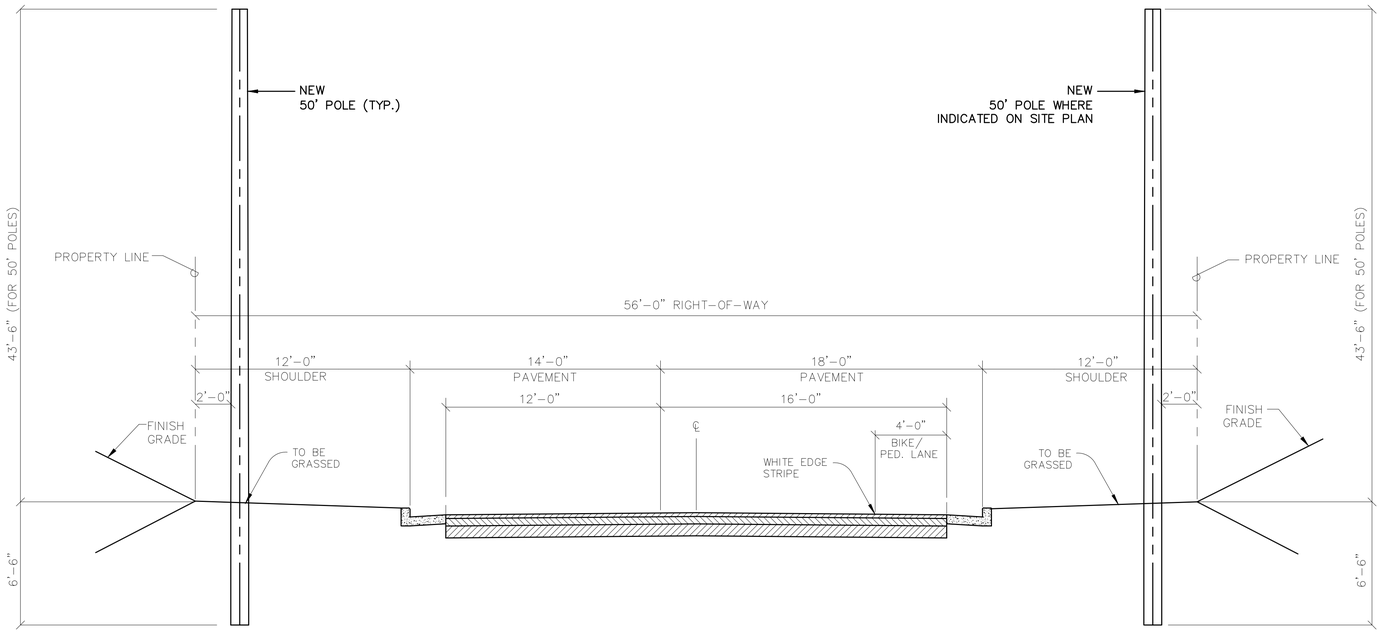

POLE DETAIL @ TYPICAL SECTION - 56 FT. RIGHT-OF-WAY

NOT TO SCALE

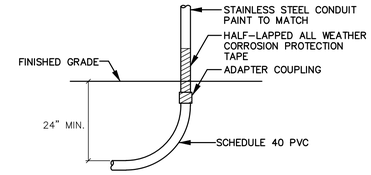

(CUSTOMER SIDE)

CONDUIT TRANSITION DETAIL

NOT TO SCALE

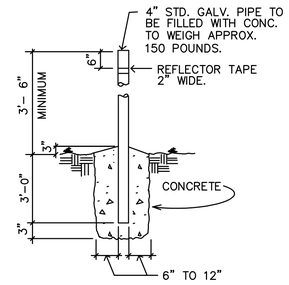

NOTE:

BARRIER POSTS ARE TO BE PAINTED YELLOW ACCORDING TO ANSI SPEC Z535.1 TO COMPLY WITH OSHA STANDARD 1910.144 FOR COLORING CODE. A 2" WIDE STRIPE OF REFLECTIVE TAPE MUST BE PLACED 6" BELOW THE TOP OF THE POST.

UG-30-5000

DETAIL "X"

NOT TO SCALE

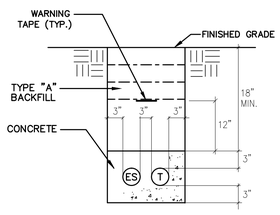

TYPICAL SERVICE LATERAL STREET CROSSING SECTION

DUCTLINE NOTES:

1. REFER TO ELECTRICAL PLAN FOR DUCT SIZES AND QUANTITIES.
2. CONCRETE ENCASED CONDUITS SHALL BE PVC SCHED. 40 PVC.
3. CONCRETE ENCASED CONDUITS OF LIKE USE MAY BE SEPARATED BY 1 1/2".
4. CONCRETE COMPREHENSIVE STRENGTH SHALL BE 2,500 PSI IN 28 DAYS.
5. DUCTLINE TRENCHES MAY BE BACKFILLED 24 HOURS AFTER CONCRETE IS POURED.
6. CONTRACTOR SHALL COORDINATE DUCTLINE AND TRENCHING.

TYPICAL DUCTLINE and TRENCHING DETAILS

NOT TO SCALE

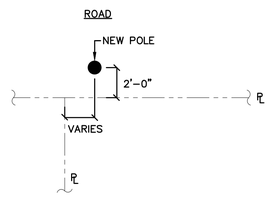

TYPICAL POLE LOCATION IN R-O-W

NOT TO SCALE

DUCT NOTES

1. ALL CONDUITS TO BE PVC SCHEDULE 40.
2. ALL CONDUITS TO CONTAIN A "MULE TAPE" PULL LINE (WESCO CAT. #0725-92000 OR EQUIVALENT).
3. AFTER THE CONDUITS ARE INSTALLED, THE CUSTOMER SHALL PASS A SMOOTH BULLET-SHAPED WOODEN TEST MANDREL THROUGH THE ENTIRE LENGTH OF EACH CONDUIT TO TEST FOR FREEDOM OF BURRS AND OBSTRUCTIONS.
4. BACKFILL LEGEND:

TYPE "A" BACKFILL:
BEACH SAND, EARTH, OR EARTH AND GRAVEL. IF EARTH AND GRAVEL, THE MAXIMUM ROCK SIZE SHALL BE 1" AND THE MIXTURE SHALL CONTAIN NOT MORE THAN 50% BY VOLUME OF ROCK PARTICLES.

TYPE "B" BACKFILL:
BEACH SAND, EARTH, OR EARTH AND GRAVEL. IF EARTH AND GRAVEL, THE MIXTURE MUST PASS A 1/2 " MESH SCREEN AND CONTAIN NOT MORE THAN 20% BY VOLUME OF ROCK PARTICLES.

NOTE:
IF THE NORMAL MATERIAL IN THE BOTTOM OF THE TRENCH IS NOT TYPE "B", AN ADDITIONAL 3" SHALL BE EXCAVATED AND TYPE "B" BACKFILL SHALL BE PROVIDED.

CONCRETE ENCASEMENT
STRENGTH: 2500 PSI IN 28 DAYS
MAXIMUM AGREGATE: 3/4 "

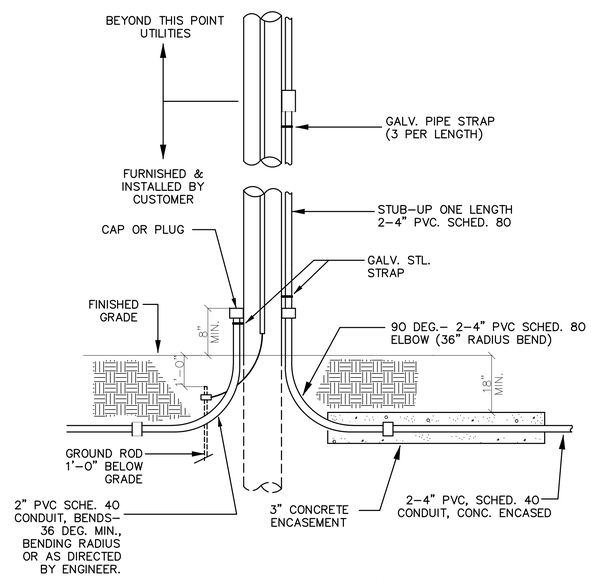

RISER POLE DETAIL

NOT TO SCALE

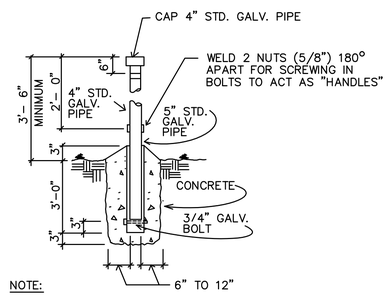

NOTE:

BARRIER POSTS ARE TO BE PAINTED YELLOW ACCORDING TO ANSI SPEC Z535.1 TO COMPLY WITH OSHA STANDARD 1910.144 FOR COLORING CODE. A 2" WIDE STRIPE OF REFLECTIVE TAPE MUST BE PLACED 6" BELOW THE TOP OF THE POST.

THE PIPE THAT IS TO BE PLACED DIRECTLY IN FRONT OF THE DOORS SHALL NOT BE FILLED WITH CONCRETE. THE PIPE SHALL BE CAPPED AND THE WELDED NUTS USED TO SCREW IN BOLTS TO ACT AS HANDLES FOR LIFTING. THE BOLTS ARE TO BE REMOVED AFTER INSTALLATION.

UG-30-5000

DETAIL "X-1"

NOT TO SCALE

AustinTsutsumi
& ASSOCIATES, INC.
CIVIL ENGINEERS I SURVEYORS
HONOLULU I WAILUKU I HILO, HAWAII

501 SUMNER STREET, SUITE 521
HONOLULU, HAWAII 96817

PHONE: 808-533-3646
FAX: 808-526-1267

STATE OF HAWAII
DEPARTMENT OF
HAWAIIAN HOME LANDS

PULEHUNUI
GRAVITY SEWER
NORTH PUMP SITE

AUSTIN, TSUTSUMI & ASSOC., INC.
ENGINEERS, SUVEYORS • HONOLULU, HAWAII

MARK P. RICKARD
LICENSED
PROFESSIONAL
ENGINEER
No. 8991-E
HAWAII, U.S.A.

This work was prepared by me or under my supervision and construction of this project will be under my observation. (Observation of construction as defined in Chapter 16-115 Subchapter 1 Definitions of the Hawaii Administrative Rules "Professional Engineers, Architects, Surveyors, and Landscape Architects.")

SIGNATURE — APRIL 30, 2020 — EXP. DATE OF THE LICENSE

0 1 2
LINE IS 2 INCHES AT FULL SIZE
(If NOT 2-inches : Scale Accordingly)

REVISION	DATE	BRIEF	BY

Project No:	16-576
Scale:	AS NOTED
Date:	1/22/19
Designed By:	MPR
Drawn By:	AKK
Checked By:	MPR

SOUTH PUMP STAION
DETAILS

DWG. NO.

EA4-5

SHEET OF XX

FILE	POCKET	FOLDER	NO.

JOB NO. 0-11-056.004
FN: H:\ACAD2\2019-60 PULEHUNUI NORTH AND SOUTH PUMP STATIONS\SOUTH PUMP STATION\E-4.DWG

BOLT DIA.	A	B
3/4"	6"	6"
7/8"	6"	8"
1"	8"	8"
1-1/8"	8"	10"
1-1/4"	8"	12"
1-1/2"	10"	14"

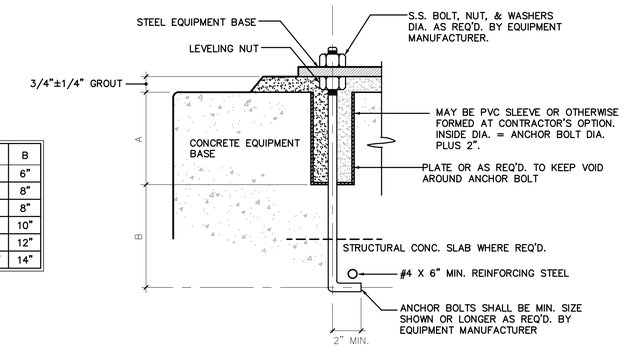

ANCHOR BOLT DETAIL

NOT TO SCALE

NOTES:

1. ALL EQUIPMENT, INCLUDING TANKS, SHALL HAVE A CONCRETE EQUIPMENT BASE TO SUIT.
2. ANCHOR BOLTS SHALL BE SIZED FOR THE EQUIPMENT LOAD PLUS SEISMIC LOADS (ZONE 2006IBC SEISMIC DESIGN CATEGORY D).
3. ANCHOR BOLTS SHALL BE SET IN POCKETS, EITHER PIPE OR BLOCKOUTS. SEE ANCHOR BOLT DETAIL. ANCHOR BOLT SHALL PENETRATE STRUCTURAL SLAB AS REQ'D TO MEET MINIMUM EMBEDMENT SPECIFIED.
4. DRILLED HOLES WITH A.B. SET IN NON-SHRINK GROUT MAY BE USED IN LIEU OF HOOKED BOLTS. EXPANSION SHIELD TYPE BOLTS SHALL NOT BE USED.
5. ALL PENETRATIONS FOR CONDUIT AND PIPING SHALL BE WITHIN CONCRETE EQUIPMENT PAD. PAD TO BE CONFIGURED ACCORDINGLY.
6. DEPTH OF SLAB TO BE AT MINIMUM THE LENGTH OF ANCHOR BOLTS. PLUS 6". SLAB DEPTH TO BE A MINIMUM OF 30", VERIFY MANUFACTURER'S RECOMMENDATIONS.
7. CONCRETE STRENGTH SHOULD BE MIN. 4000 PSI, IN 28 DAYS.
8. INCLUDE VIBRATION ISOLATORS PER MANUFACTURER'S RECOMMENDATIONS.

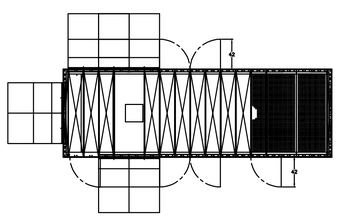

TOP ELEVATION

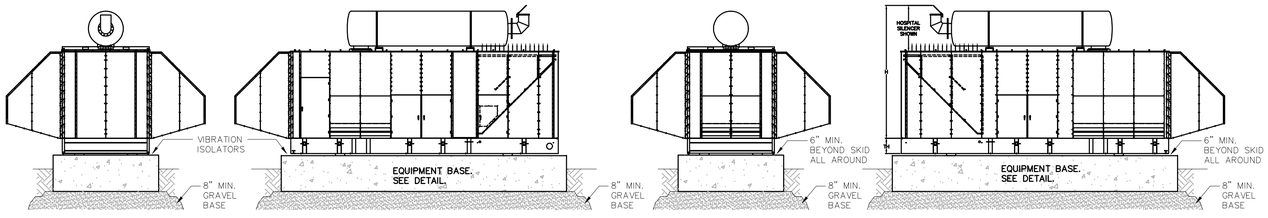

SIDE ELEVATION | FRONT ELEVATION | SIDE ELEVATION | BACK ELEVATION

GENERATOR SET ELEVATIONS

NOT TO SCALE

NOTES:

1. 175KW GENSET W/ QUIET SITE HOUSING AND SKID MOUNTED DAY TANK (CUMMINGS C175D6D).

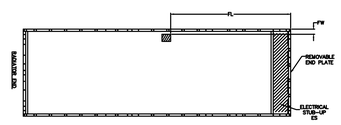

PLAN VIEW of TANK ONLY

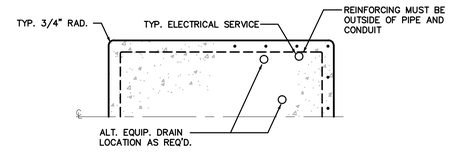

PLAN

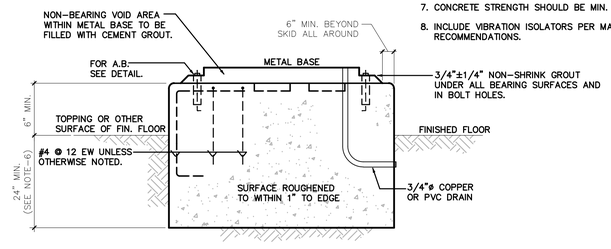

SECTION

EQUIPMENT BASE DETAIL

NOT TO SCALE

JOB NO. O-11-056.004
FN: H:\ACAD2\2019-60 PULEHUNUI NORTH AND SOUTH PUMP STATIONS\SOUTH PUMP STATION\E-5.DWG

AustinTsutsumi
& ASSOCIATES, INC.
CIVIL ENGINEERS I SURVEYORS
HONOLULU I WAILUKU I HILO, HAWAII

501 SUMNER STREET, SUITE 521
HONOLULU, HAWAII 96817

PHONE: 808-533-3646
FAX: 808-526-1267

STATE OF HAWAII
DEPARTMENT OF
HAWAIIAN HOME LANDS

PULEHUNUI
REGONIAL
INFUSTRUCTURE

AUSTIN, TSUTSUMI & ASSOC., INC.
ENGINEERS, SUVEYORS • HONOLULU, HAWAII

MARK P. RICKARD
LICENSED PROFESSIONAL ENGINEER
No. 8991-E
HAWAII, U.S.A.

This work was prepared by me or under my supervision and construction of this project will be under my observation. (Observation of construction as defined in Chapter 16-115 Subchapter 1 Definitions of the Hawaii Administrative Rules "Professional Engineers, Architects, Surveyors, and Landscape Architects.")

SIGNATURE APRIL 30, 2020
EXP. DATE OF THE LICENSE

0 1 2
LINE IS 2 INCHES AT FULL SIZE
(If NOT 2-inches : Scale Accordingly)

REVISION	DATE	BRIEF	BY

Project No:	16-576
Scale:	AS NOTED
Date:	1/22/19
Designed By:	MPR
Drawn By:	RMB
Checked By:	MPR

SOUTH PUMP STATION
DETAILS

DWG. NO.

EA4-6

SHEET OF XX

FILE	POCKET	FOLDER	NO.

MCC UNIT SCHEDULE

ID		DEVICE INFORMATION			
SECTION NUMBER	CELL	CIRCUIT NAMEPLATE	DEVICE TYPE	DEVICE MOUNTING (SEE NOTES)	DEVICE SIZE
1	C	TVSS	TRANSIENT VOLTAGE SURGE SUPPRESSOR (TVSS)	D	200 kA
1	E				
1	H		DOOR (BLANK)		
1	M		MAIN LUGS (MLO)		
2	D		DOOR (BLANK)		
2	F	PANEL-A	PANELBOARD (PNLBD)	F	100A
2	H		DOOR (BLANK)		
2	M	1 PHASE 5 KVA	DISTRIBUTION TRANSFORMER (XFMR)	F	5 kVA
3	F	PUMP NO. 1	CIRCUIT BREAKER	D	100A
3	M	PUMP NO. 2	CIRCUIT BREAKER	D	100A
4	M	SCADA	RELAY STRUCTURE (RLYSTR)		

NOTES:

1. DEVICE MOUNTING: D = DRAWOUT, F = FIXED

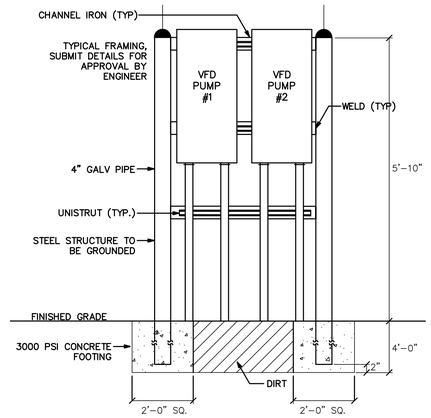

FRAMING DETAIL

VFD EQUIPMENT ELEVATION

NOT TO SCALE

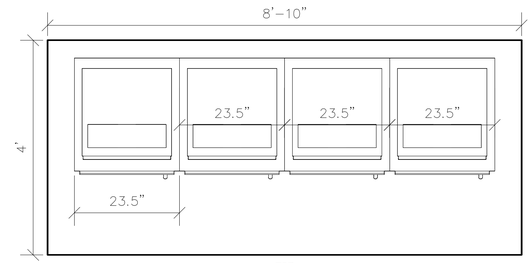

TOP

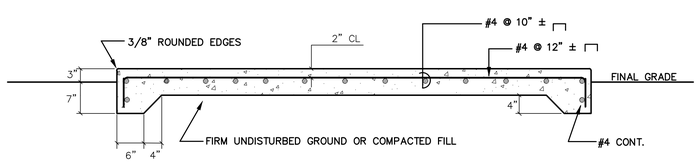

MOTOR CONTROL ENCLOSURE PAD DETAILS

SCALE: 3/4" = 1'-0"

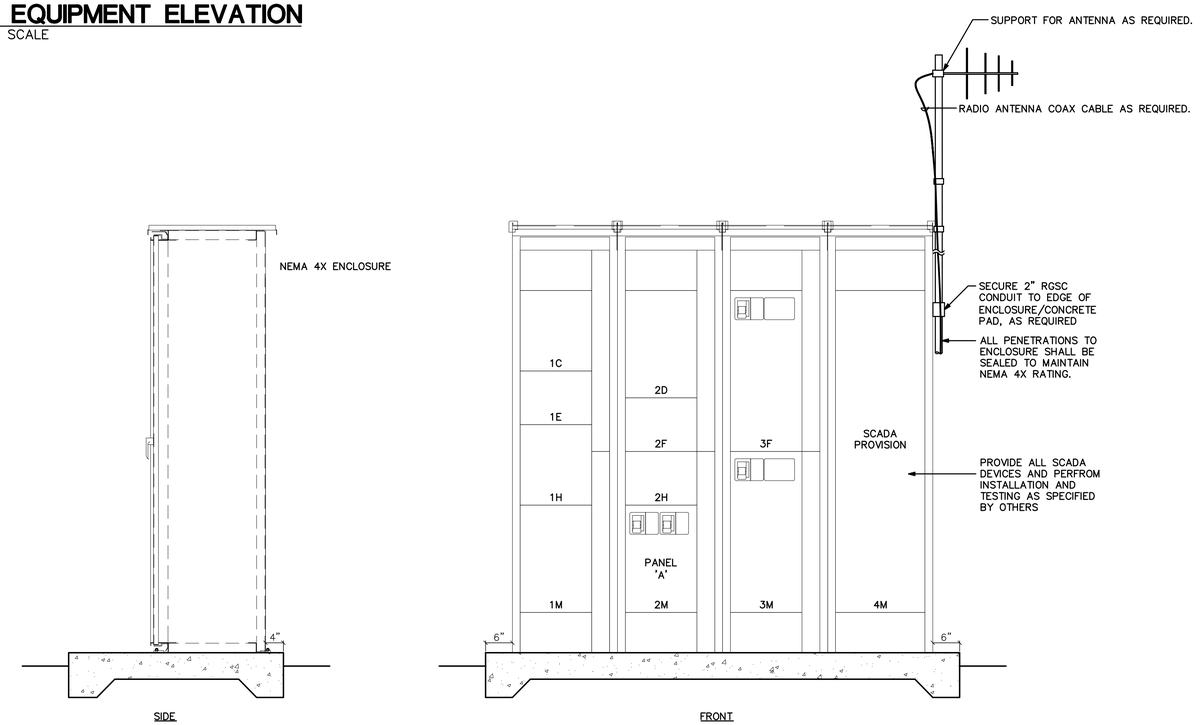

MOTOR CONTROL ENCLOSURE DETAILS (BY OTHERS)

SCALE: 3/4" = 1'-0"

0 1 1.5 3
GRAPHIC SCALE

AustinTsutsumi
& ASSOCIATES, INC.
CIVIL ENGINEERS I SURVEYORS
HONOLULU I WAILUKU I HILO, HAWAII

501 SUMNER STREET, SUITE 521
HONOLULU, HAWAII 96817

PHONE: 808-533-3646
FAX: 808-526-1267

STATE OF HAWAII
DEPARTMENT OF
HAWAIIAN HOME LANDS

PULEHUNUI
REGONIAL
INFUSTRUCTURE

AUSTIN, TSUTSUMI & ASSOC., INC.
ENGINEERS, SUVEYORS • HONOLULU, HAWAII

MARK P. RICKARD
LICENSED PROFESSIONAL ENGINEER
No. 8991-E
HAWAII, U.S.A.

This work was prepared by me or under my supervision and construction of this project will be under my observation. (Observation of construction as defined in Chapter 16-115 Subchapter 1 Definitions of the Hawaii Administrative Rules "Professional Engineers, Architects, Surveyors, and Landscape Architects.")

SIGNATURE — APRIL 30, 2020 EXP. DATE OF THE LICENSE

0 1 2
LINE IS 2 INCHES AT FULL SIZE
(If NOT 2-inches : Scale Accordingly)

REVISION	DATE	BRIEF	BY

Project No:	16-576
Scale:	AS NOTED
Date:	1/22/19
Designed By:	MPR
Drawn By:	RMB
Checked By:	MPR

SOUTH PUMP STATION DETAILS

DWG. NO.

EA4-7

SHEET OF XX

FILE	POCKET	FOLDER	NO.

JOB NO. 0-11-056.004
FN: H:\ACAD2\2019-60 PULEHUNUI NORTH AND SOUTH PUMP STATIONS\SOUTH PUMP STATION\E-6.DWG

COUNTY OF MAUI
MAUI COUNTY CODE, CHAPTER 16.16B ENERGY CODE
RESIDENTIAL PROVISIONS

COMPLIANCE METHOD
Check applicable method

☐	R401.2(1) R401.3 through R404 (Prescriptive)
☒	R401.2(2) R405 (Simulated PERFORMANCE ALTERNATIVE)
☐	R401.2(3) R406 (Energy Rating Index Compliance Alternative)
☐	R401.2(4) R401.2.1 (Tropical Zone)
☐	R102.1 (Alternative)

To the best of my knowledge, this project's design substantially conforms to the Energy Code.

Signature: _____ Date: 06-27-19

Name: MARK P. RICKARD

Title: PROJECT ENGINEER

License No.: 8991-E

MAUI COUNTY CODE CHAPTER 20.35
OUTDOOR LIGHTING

THE ELECTRICAL OUTDOOR LIGHTING SYSTEM AND EQUIPMENT HAVE BEEN REVIEWED BY ME AN TO THE BEST OF MY KNOWLEDGE, THIS DESIGN SUBSTANTIALLY CONFORMS TO THE REQUIREMENTS SPECIFIED IN MAUI COUNTY CODE CHAPTER 20.35 OUTDOOR LIGHTING.

SIGNATURE	PROJECT ENGINEER TITLE
MARK P. RICKARD NAME (PRINT)	8991-E STATE OF HAWAII P.E. LICENSE NUMBER

EXTERIOR LIGHTING CALCULATIONS		
APPLICATION	ACTUAL WATTS	ALLOWED WATTS
BASE ALLOWANCE, ZONE 1	268	500

INTERIOR LIGHTING CALCULATIONS				
SPACE	AREA SQFT	POWER ALLOWANCE (W/SQFT)	ACTUAL WATTS	ALLOWED WATTS
PULEHUNUI WWTP	400	1.0	92	400

GENERAL NOTES:

1. PLANS SUBJECT TO REVIEW AND APPROVAL OF UTILITY COMPANIES.
2. THE CONTRACTOR/UTILITY COMPANY SHALL CONTACT THE DEPARTMENT OF WATER SUPPLY AT PHONE # 270-7340 ONE (1) WEEK PRIOR TO COMMENCEMENT OF WORK.
3. THE CONTRACTOR/UTILITY COMPANY SHALL BE RESPONSIBLE TO VERIFY THE EXACT DEPTH AND LOCATION OF EXISTING WATERLINES IN THE PROJECT AREA PRIOR TO COMMENCEMENT OF WORK AND SHALL MEET WITH THE DEPARTMENT OF WATER SUPPLY PERSONNEL OUT IN THE FIELD TO HELP LOCATE THE EXISTING WATERLINES IN THE PROJECT AREA IF NECESSARY.
4. MAINTAIN A MINIMUM OF THREE (3) FEET CLEAR HORIZONTAL SEPARATION BETWEEN EXISTING WATERLINES AND INSTALLED UTILITIES.
5. MAINTAIN A MINIMUM OF SIX (6) INCHES CLEAR VERTICAL SEPARATION BETWEEN EXISTING WATERLINES AND INSTALLED UTILITIES AT ALL CROSSINGS.
6. ANY INSTALLED UTILITY CROSSING AN EXISTING WATERLINE SHALL BE CONCRETE JACKETED A MINIMUM OF FIVE (5) FEET ON BOTH SIDES OF THE CROSSING.

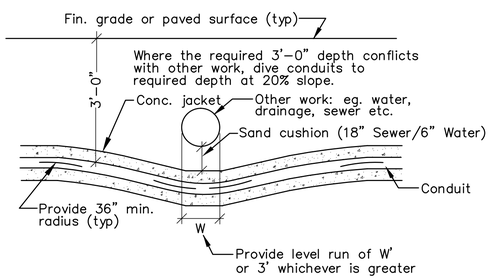

TYPICAL DUCTS CROSSING UNDER OTHER WORK

NOT TO SCALE

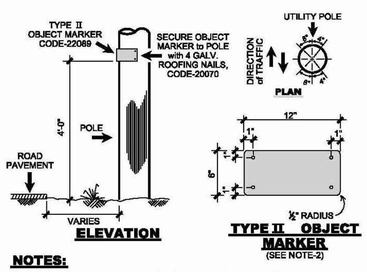

NOTES:

1. THE TYPE II OBJECT MARKER (OM2-2H, 12"x6", per MUTCD 2003) shall be made of HIGH INTENSITY AMBER REFLECTIVE SHEETING MATERIAL OVERLAYED on 0.020" ALUMINUM SHEETING.
2. INSTALL TWO(2) OBJECT MARKERS: ONE ON EACH SIDE OF POLE FACING ONCOMING TRAFFIC AS SHOWN ON THIS PLAN VIEW.

COUNTY REQUIRED TYPE II MARKER

DEPARTMENT OF WATER SUPPLY NOTES:

1. THE CONTRACTOR SHALL CONTACT THE DWS (PH# 243-7633) PRIOR TO COMMENCEMENT OF WORK.
2. THE CONTRACTOR SHALL CONTACT THE DWS FOR THE EXACT DEPTH AND LOCATION OF EXISTING WATERLINES. SERVICE LATERALS, AND APPURTENANCES TO BE DETERMINED IN THE FIELD.
3. IT SHALL BE THE CONTRACTOR'S RESPONSIBILITY TO LOCATE SAME (ITEM #2) PRIOR TO TRENCHING. FACILITIES DAMAGED BY THE CONTRACTOR'S OPERATION SHALL BE REPAIRED IMMEDIATELY BY THE CONTRACTOR AT HIS/HER EXPENSE.
4. KEEP 3 FEET MINIMUM HORIZONTAL CLEARENCE AND / OR 6 INCH MINIMUM VERTICAL CLEARANCE BETWEEN EXISTING WATER SYSTEM IMPROVEMENTS AND ELECTRICAL UTILITIES.
5. ANY ELECTRICAL CONDUIT, WHEN INDEPENDENTLY INSTALLED AND CROSSING AN EXISTING WATERLINE, GAS, OIL, OR OTHER PIPE SYSTEMS, SHALL BE CONCRETE JACKETED 5 FEET OF BOTH SIDES OF CROSSING IF IT IS SEPARATED BY LESS THAN 6 INCHES.

CONTRUCTION NOTES

1. CONTRACTOR SHALL OBTAIN A PERMIT TO PERFORM WORK ON COUNTY HIGHWAYS FROM THE DEVELOPMENT SERVICES ADMINISTRATION TWO WEEKS PRIOR TO THE COMMENCEMENT OF WORK.
2. STANDARD DETAIL DRAWINGS AND STANDARD SPECIFICATIONS OF THE DEPARTMENT OF PUBLIC WORKS SHALL BE INCLUDED AS PART OF THE CONSTRUCTION PLANS.
3. ALL CONSTRUCTION WORK SHALL STRICTLY CONFORM TO THE LATEST VERSION OF THE HAWAII STANDARD SPECIFICATIONS FOR ROAD AND BRIDGE PUBLIC WORKS CONSTRUCTION, AND THE SEPTEMBER 1984 "STANDARD DETAILS" FOR PUBLIC WORKS CONSTRUCTION OF THE DEPARTMENT OF PUBLIC WORKS, AS AMENDED.
4. IF EXISTING UTILITIES, WHETHER OR NOT SHOWN ON PLANS, ARE DAMAGED DURING CONSTRUCTION, THE CONTRACTOR SHALL AT HIS OWN EXPENSE BE REQUIRED TO REPAIR SUCH UTILITIES.
5. THE DIRECTOR PUBLIC WORKS AND/OR THE DIRECTOR OF THE DEPARTMENT OF WATER SUPPLY HAS THE RIGHT TO STOP CONSTRUCTION SHOULD ANY WORK BE FOUND CONTRARY TO THE APPROVED CONSTRUCTION PLAN OR DETRIMENTAL TO THE PUBLIC'S INTEREST.
6. THE CONTRACTOR SHALL SCHEDULE A PRE-CONSTRUCTION MEETING WITH THE DEVELOPMENT SERVICES ADMINISTRATION FIVE (5) DAYS PRIOR TO COMMENCEMENT OF CONSTRUCTION.
7. THE CONTRACTOR SHALL, AT HIS OWN EXPENSE, KEEP THE PROJECT AREA AND SURROUNDING AREA FREE FROM DUST NUISANCE. THE WORK SHALL BE IN CONFORMANCE WITH AIR POLLUTION CONTROL STANDARDS AND REGULATIONS OF THE STATE DEPARTMENT OF HEALTH AND COUNTY GRADING ORDINANCE.
8. THE CONTRACTOR SHALL REMOVE ALL SILT AND DEBRIS RESULTING FROM HIS WORK AND DEPOSITED IN DRAINAGE FACILITIES, ROADWAYS AND OTHER AREAS. THE COST INCURRED FOR ANY NECESSARY REMEDIAL ACTION ORDERED BY THE DIRECTOR OF PUBLIC WORKS SHALL BE PAID BY THE CONTRACTOR.
9. CONSTRUCTION DEBRIS AND WASTES SHALL BE DEPOSITED AT AN APPROPRIATE WORK SITE. THE CONTRACTOR SHALL INFORM THE DIRECTOR OF PUBLIC WORKS OF THE LOCATION OF THE DISPOSAL SITES. THE DISPOSAL SITE MUST FULFILL THE REQUIREMENTS OF THE GRADING ORDINANCE.
10. THE CONTRACTOR SHALL SUBMIT A TIFF AND FIVE (5) COPIES OF THE "AS-BUILT" DRAWINGS PRIOR TO THE FINAL APPROVAL OF THE IMPROVEMENTS.
11. IF THE CLEARANCE BETWEEN A WASTEWATER LINE AND A NEW OR EXISTING WATERLINE IS EIGHTEEN INCHES (18") OR LESS, THE WASTEWATER LINE SHALL BE CONCRETE-JACKETED IN ACCORDANCE WITH THE STANDARD DETAILS OF PUBLIC WORKS CONSTRUCTION DATED SEPTEMBER 1984, AS AMENDED.
12. SHOULD HISTORIC SITES SUCH AS WALLS, PLATFORMS, PAVEMENTS, OR MOUNDS, OR REMAINS SUCH AS ARTIFACTS BURIALS, CONCENTRATION OF SHELL OR CHARCOAL BE ENCOUNTERED DURING CONSTRUCTION ACTIVITIES, WORK SHALL CEASE IMMEDIATELY IN THE IMMEDIATE VICINITY OF THE FIND AND THE FIND SHALL BE PROTECTED FROM FURTHER DAMAGE. THE CONTRACTOR AND/OR LANDOWNER SHALL IMMEDIATELY CONTACT THE STATE HISTORIC PRESERVATION DIVISION (692-8015), WHICH WILL ASSESS THE SIGNIFICANCE OF THE FIND AND RECOMMEND AN APPROPRIATE MITIGATION MEASURE, IF NECESSARY.
13. PURSUANT OF MAUI COUNTY CODE SECTION 3.44.015(C), THE COUNTY OF MAUI IS NOT RESPONSIBLE FOR ANY PARK, ROADWAY, EASEMENT (INCLUDING BUT NOT LIMITED TO DRAINAGE, SEWER, ACCESS, RECLAIMED WATER, OR AVIGATION EASEMENT), OR ANY OTHER INTEREST IN REAL PROPERTY SHOWN ON THIS MAP OR SHOWN ON THESE PLANS, UNLESS THE MAUI COUNTY COUNCIL HAS ACCEPTED ITS DEDICATION BY A RESOLUTION APPROVED BY A MAJORITY OF COUNCIL'S MEMBERS AT A REGULAR OR SPECIAL MEETING OF THE MAUI COUNTY COUNCIL.
14. STEEL PLATE WARNING SIGNS ARE REQUIRED FOR ALL STEEL PLATES IN THE RIGHT-OF-WAY.
15. WHEELCHAIR RAMP INSPECTION/CERTIFICATION FORMS SHALL BE REQUIRED FOR ALL NEWLY CONSTRUCTED RAMPS.
16. ALL STRIPING AND PAVEMENT MARKINGS SHALL BE OF THERMOPLASTIC MATERIAL.
17. COMPACTION REQUIREMENTS
    a. TESTING OF MATERIALS SHALL BE CONDUCTED BY AN APPROVED INDEPENDENT TESTING AGENCY IN ACCORDANCE WITH ASTM STANDARD METHODS OR AS SPECIFIED BY THE DEPARTMENT OF PUBLIC WORKS, ENGINEERING DIVISION, AS FOLLOWS:
    i. EMBANKMENT/SELECT BORROW AND SUBGRADE MATERIALS: ONE (1) COMPACTION TEST PER 600 SQUARE YARDS PER LIFT;
    ii. AGGREGATE SUBBASE COURSE: ONE (1) COMPACTION TEST PER 400 SQUARE YARDS; ONE (1) GRADATION AND SAND EQUIVALENT TEST PER LIFT PER PROJECT;
    iii. AGGREGATE BASE COURSE: ONE (1) COMPACTION TEST PER 300 SQUARE YARDS; ONE (1) GRADATION AND SAND EQUIVALENT TEST PER LIFT PER PROJECT;
    iv. ASPHALT CONCRETE PAVEMENT OR ASPHALT TREATED BASE COURSE; THREE (3) A.C. CORES FOR THICKNESS AN DENSITY TESTS PER PROJECT;
    v. TRENCH BACKFILL MATERIAL: ONE (1) TEST FOR EACH 300 LINEAL FEET OF TRENCH PER LIFT OF MATERIAL.
    b. CONTRACTOR SHALL SUBMIT ALL TESTING REPORTS INCLUDING RESULTS TO THE COUNTY'S INSPECTION AGENCY FOR REVIEW AND APPROVAL PRIOR TO COUNTY'S ACCEPTANCE OF WORK.
    c. THE CONTRACTOR SHALL BE REQUIRED TO NOTIFY THE COUNTY OF ANY TESTING FAILURES AND CORRECT EACH FAILURE PRIOR TO PROCEEDING TO THE NEXT PHASE OF CONSTRUCTION.

APPROVALS:

DIRECTOR – DEPARTMENT OF PUBLIC WORKS (APPROVAL FOR WORK WITHIN COUNTY RIGHT OF WAY ONLY)	DATE
DIRECTOR – DEPARTMENT OF ENVIRONMENTAL MANAGEMENT (APPROVAL FOR WORK WITHIN COUNTY RIGHT OF WAY ONLY)	DATE
DIRECTOR – DEPARTMENT OF WATER SUPPLY. COUNTY OF MAUI (APPROVAL LIMITED TO WATER IMPROVEMENTS WHICH WILL BE DEDICATED TO THE DEPARTMENT OF WATER SUPPLY)	DATE

AustinTsutsumi
& ASSOCIATES, INC.
CIVIL ENGINEERS I SURVEYORS
HONOLULU I WAILUKU I HILO, HAWAII
501 SUMNER STREET, SUITE 521
HONOLULU, HAWAII 96817
PHONE: 808-533-3646
FAX: 808-526-1267

STATE OF HAWAII
DEPARTMENT OF
HAWAIIAN HOME LANDS

PULEHUNUI
REGIONAL
INFUSTRUCTURE

AUSTIN, TSUTSUMI & ASSOC., INC.
ENGINEERS, SUVEYORS • HONOLULU, HAWAII

MARK P. RICKARD
LICENSED PROFESSIONAL ENGINEER
No. 8991-E
HAWAII, U.S.A.

This work was prepared by me or under my supervision and construction of this project will be under my observation. (Observation of construction as defined in Chapter 16-115 Subchapter 1 Definitions of the Hawaii Administrative Rules "Professional Engineers, Architects, Surveyors, and Landscape Architects.")

SIGNATURE APRIL 30, 2020
EXP. DATE OF THE LICENSE

0 1 2
LINE IS 2 INCHES AT FULL SIZE
(If NOT 2-inches : Scale Accordingly)

REVISION	DATE	BRIEF	BY

Project No:	16-576
Scale:	AS NOTED
Date:	1/22/19
Designed By:	MPR
Drawn By:	AKK
Checked By:	MPR

PHASE B – DHHL
REGIONAL WWTF
NOTES & DETAILS

DWG. NO.
EB-1
SHEET OF XX

FILE	POCKET	FOLDER	NO.

JOB NO. 0-11-056.004
FN: H:\ACAD2\2019-60.01 PULEHUNUI GRAVITY SEWER WWTP\DRAWINGS\PHASE B\E-0.DWG

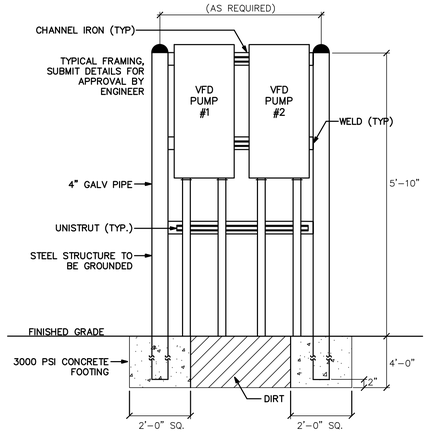

FRAMING DETAIL

TYPICAL VFD EQUIPMENT ELEVATION

NOT TO SCALE

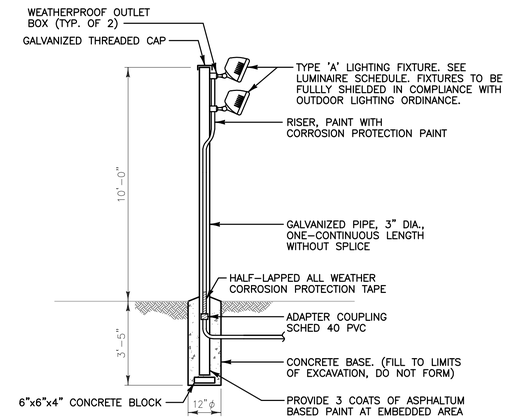

FLOODLIGHT DETAIL

NOT TO SCALE

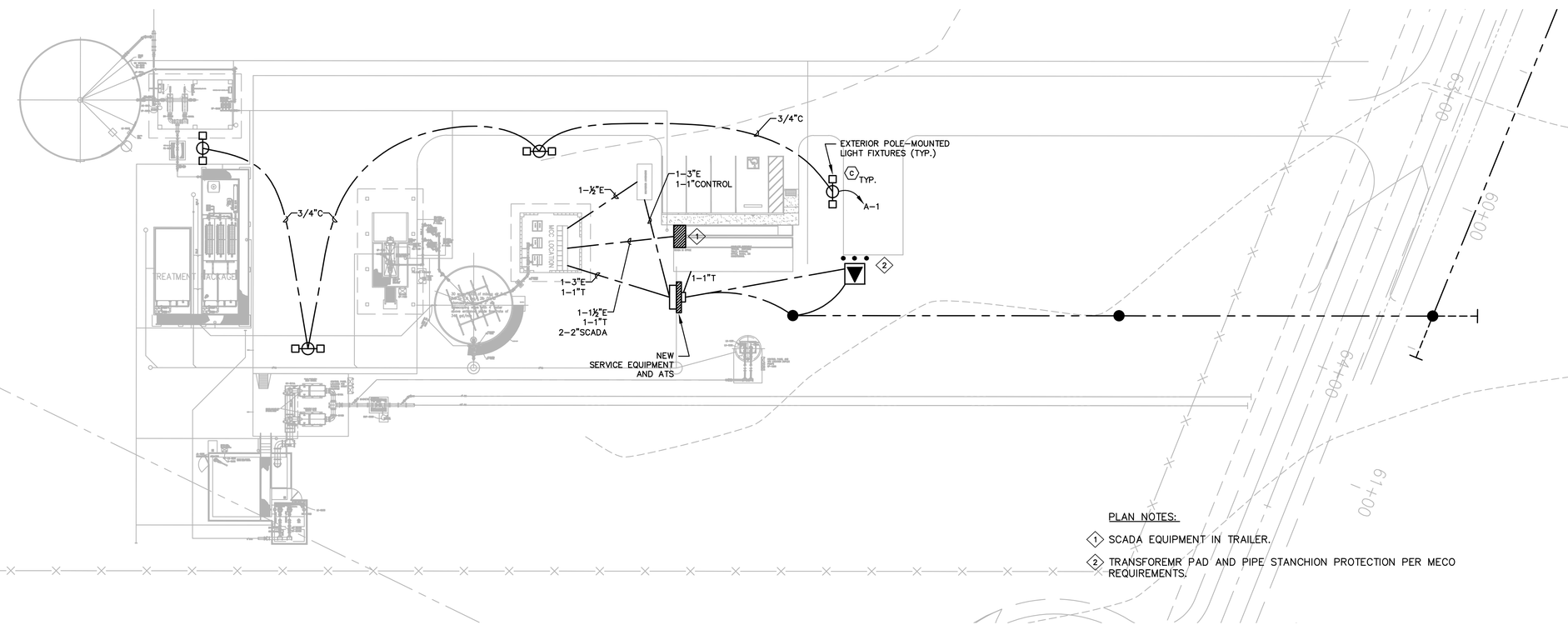

PLAN NOTES:

1. SCADA EQUIPMENT IN TRAILER.
2. TRANSFOREMR PAD AND PIPE STANCHION PROTECTION PER MECO REQUIREMENTS.

N

WWTP - OVERALL SITE PLAN

SCALE: 1" = 20'-0"

JOB NO. 0-11-056.004
FN: H:\ACAD2\2019-60.01 PULEHUNUI GRAVITY SEWER WWTP\DRAWINGS\PHASE B\E-2R.DWG

AustinTsutsumi
& ASSOCIATES, INC.
CIVIL ENGINEERS I SURVEYORS
HONOLULU I WAILUKU I HILO, HAWAII

501 SUMNER STREET, SUITE 521
HONOLULU, HAWAII 96817

PHONE: 808-533-3646
FAX: 808-526-1267

STATE OF HAWAII
DEPARTMENT OF
HAWAIIAN HOME LANDS

PULEHUNUI
REGIONAL
INFUSTRUCTURE

AUSTIN, TSUTSUMI & ASSOC., INC.
ENGINEERS, SUVEYORS • HONOLULU, HAWAII

MARK P. RICKARD
LICENSED PROFESSIONAL ENGINEER
No. 8991-E
HAWAII, U.S.A.

This work was prepared by me or under my supervision and construction of this project will be under my observation. (Observation of construction as defined in Chapter 16-115 Subchapter 1 Definitions of the Hawaii Administrative Rules "Professional Engineers, Architects, Surveyors, and Landscape Architects.")

SIGNATURE — APRIL 30, 2020 — EXP. DATE OF THE LICENSE

0 1 2
LINE IS 2 INCHES AT FULL SIZE
(If NOT 2-inches : Scale Accordingly)

REVISION	DATE	BRIEF	BY

Project No:	16-576
Scale:	AS NOTED
Date:	1/22/19
Designed By:	MPR
Drawn By:	AKK
Checked By:	MPR

REGIONAL WWTP – OVERALL SITE PLAN

DWG. NO.

EB-2

SHEET OF XX

FILE	POCKET	FOLDER	NO.

DUCTLINE NOTES

1. REFER TO ELECTRICAL PLAN FOR DUCT SIZES AND QUANTITIES.
2. DIRECT BURIED AND CONCRETE ENCASED ELECTRICAL AND CONDUITS SHALL BE PVC SCHEDULE 40 CONDUITS.
3. DIRECT BURIED CONDUITS OF LIKE USE SHALL BE SEPARATED BY A MINIMUM OF 3". A MINIMUM SEPARATION OF 12" MUST BE MAINTAINED BETWEEN ELECTRICAL CONDUITS AND TELEMETRY CONDUITS.

   CONCRETE ENCASED CONDUITS OF LIKE USE MAY BE SEPARATED BY 1-1/2". CONDUITS OF UNLIKE USES MUST BE SEPARATED BY 3".
4. CONTRACTOR SHALL COORDINATE DUCTLINE AND TRENCHING DETAILS WITH UTILITY COMPANIES.
5. UPON COMPLETION OF ALL DUCTLINES, THE CONTRACTOR SHALL PASS A BULLET SHAPED, WOODEN TEST MANDREL 1/2" SMALLER IN DIAMETER THAN THE CONDUITS, THROUGH THE ENTIRE LENGTH OF EACH DUCT SECTION TO TEST FOR FREEDOM OF BURRS AND OBSTRUCTIONS. THE CONTRACTOR SHALL REMOVE ALL BURRS, OBSTRUCTION AND FOREIGN MATTER TO THE SATISFACTION OF THE UTILITY COMPANIES' INSPECTORS.

   UPON COMPLETION OF THE TELEMETRY DUCTLINE, THE CONTRACTOR SHALL PASS A BLOCKED SHAPED, WOODEN TEST MANDREL, 12" LONG AND 1/4" SMALLER IN DIAMETER THAN THE CONDUIT THROUGH THE ENTIRE LENGTH OF EACH DUCT SECTION. THE DUCTS SHALL BE SWABBED AND CLEARED OF ALL BURRS, OBSTRUCTIONS AND FOREIGN MATERIAL.
6. THE UTILITY COMPANIES' INSPECTORS SHALL INSPECT THE UNDERGROUND DUCTLINES AND STRUCTURES PRIOR TO AND DURING ALL CONCRETE POUR AND BACKFILL OPERATIONS.
7. ALL HORIZONTAL AND VERTICAL BENDS SHALL HAVE A MINIMUM RADIUS OF 20'-0".
8. CONCRETE COMPRESS STRENGTH SHALL BE 3,000 PSI IN 28 DAYS.
9. THE CONTRACTOR SHALL INSTALL A WARNING TAPE OVER DUCTLINE AS SHOWN THE TAPE SHALL BE 4" WIDE AND 8 MILS THICK, YELLOW IN COLOR WITH BLACK IMPRINTED WARNING MESSAGE.

GENERAL NOTES:

1. PROVIDE A COMPLETE AND OPERATING ELECTRICAL SYSTEM. PROVIDE SHALL MEAN "FURNISH AND INSTALL". WORK INCLUDES INSTALLATION OF ALL ELECTRICAL EQUIPMENT AND SYSTEMS, INCLUDING ANY FURNISHED BY OWNER, COMPLETE AND OPERATIONAL TO DOCUMENTS.
2. THE CONTRACTOR SHALL COMPLY WITH THE CONSTRUCTION PRACTICES AND REQUIREMENTS OF THE LATEST EDITION OF THE NATIONAL ELECTRIC CODE (NFPA 70), NATIONAL ELECTRICAL SAFETY CODE, AMERICAN ELECTRICIANS HANDBOOK BY CROFT EDISON ELECTRIC INSTITUTE, APPLICABLE INSTRUCTIONS OF MANUFACTURERS OF EQUIPMENT AND MATERIALS SUPPLIED FOR THE PROJECT, AND ALL ORDINANCES, RULES AND POLICIES OF THE STATE AND COUNTY IN WHICH THE WORK IS TO BE PERFORMED.
3. THE CONTRACTOR SHALL OBTAIN AND PAY FOR ALL FEES, PERMITS, LICENSES AND INSPECTIONS REQUIRED FOR THIS WORK.
4. ALL CONDUIT SHALL BE MINIMUM SIZE 3/4 INCH. EMT SHALL BE USED INDOORS. GALVANIZED RIGID STEEL SHALL BE USED IN EXPOSED OUTDOOR LOCATIONS. CONDUIT BELOW GRADE SHALL BE SCHEDULE 40 PVC. TRANSFORM ALL PVC CONDUIT TO RIGID GALVANIZED STEEL BEFORE PENETRATING SLAB.
5. FITTINGS FOR EMT CONDUIT SHALL BE COMPRESSION TYPE. SET SCREW FITTINGS SHALL NOT BE ALLOWED.
6. CONDUITS SIZES CALLED OUT ON THE DRAWINGS ARE NOT NECESSARILY BASED ON THE MINIMUM SIZE ALLOWED BY THE NATIONAL ELECTRICAL CODE AND MAY BE PURPOSELY OVERSIZED FOR FUTURE CONDUCTORS OR TO AVOID EXCESS CONDUIT HEATING. CONDUIT SIZES NOT CALLED OUT ON THE DRAWINGS SHALL BE SIZED BY THE CONTRACTOR BASED ON THE ACTUAL NUMBER OF CONDUCTORS TO BE INSTALLED, USING THE NATIONAL ELECTRICAL CODE AS A GUIDE. IN NO CASE SHALL CONDUIT SIZES BE SMALLER THAN IS REQUIRED BY THE NATIONAL ELECTRICAL CODE.
7. ALL CIRCUITS SHALL INCLUDE AN INSULATED GREEN GROUNDING CONDUCTOR, SIZED PER TABLE 250-122 OF THE NATIONAL ELECTRICAL CODE. THIS CONDUCTOR SHALL BE CARRIED IN ALL RACEWAYS INCLUDING THOSE INSTALLED FOR SWITCH LEGS AND SHALL BE ATTACHED TO THE DEVICE OR EQUIPMENT HOUSING USING A SUITABLE GROUNDING LUG.
8. THE CONTRACTOR SHALL PROVIDE AND INSTALL ALL JUNCTION AND PULL BOXES REQUIRED FOR THE INSTALLATION OF ELECTRICAL DEVICES AND EQUIPMENT, WHETHER OR NOT SPECIFICALLY INDICATED ON THE PLANS. SIZING OF THESE BOXES SHALL BE PER THE NATIONAL ELECTRICAL CODE.
9. THE CONTRACTOR SHALL FURNISH ALL EQUIPMENT FOR TEMPORARY CONSTRUCTION POWER AS REQUIRED.
10. SHOULD PROJECT CONDITIONS REQUIRE REARRANGEMENT OF WORK, THE CONTRACTOR SHALL MARK SUCH CHANGES ON THE FIELD POSTED DRAWINGS. IF THESE CHANGES REQUIRE ALTERNATE METHODS TO THOSE SPECIFIED IN THE CONTRACT DOCUMENTS, THE CONTRACTOR SHALL SUBMIT DRAWINGS SHOWING THE PROPOSED ALTERNATE METHODS TO THE CONTRACTING OFFICER. THE CONTRACTOR SHALL NOT PROCEED UNTIL APPROVAL IS OBTAINED. REARRANGEMENT OF WORK FOR THE PURPOSE OF COORDINATION SHALL NOT BE CONSIDERED AN ITEM FOR EXTRA COST.
11. THE CONTRACTOR SHALL BE RESPONSIBLE FOR COORDINATING AND DETAILED SCHEDULING OF THE SITE INSPECTION WORK BY UTILITY COMPANIES AND ALL OTHER CONCERNED PARTIES AND AGENCIES.
12. PROVIDE PROTECTION FOR MATERIAL AND EQUIPMENT FROM LOSS, DAMAGE, CORROSION AND EFFECTS OF MOISTURE. REPAIR OR REPLACE DAMAGED ITEMS AT NO ADDITIONAL COST TO THE OWNER.
13. VISIT PROJECT SITE PRIOR TO BID SUBMITTAL TO ASCERTAIN CONDITIONS AND COST ALLOWANCES THAT AFFECT THE PROPOSED WORK.
14. INSTALL MATERIALS AND EQUIPMENT IN WORKMANLIKE MANNER AND IN STRICT ACCORDANCE WITH MANUFACTURER'S RECOMMENDATIONS, UNLESS OTHERWISE SPECIFIED OR DIRECTED BY THE ENGINEER.
15. MATERIALS AND WORKMANSHIP SUBJECT TO INSPECTION AT ANY TIME BY THE OWNER OR HIS REPRESENTATIVE; CORRECT ANY WORK OR MATERIALS NOT IN ACCORDANCE WITH DRAWINGS OR FOUND TO BE DEFICIENT OR DEFECTIVE IN A MANNER SATISFACTORY TO THE OWNER AT NO ADDITIONAL COST.
16. PROVIDE ALL FIRST QUALITY, NEW MATERIALS, FREE FROM DEFECTS SUITABLE FOR SPACE PROVIDED AND APPROVED BY UL WHERE STANDARDS HAVE BEEN PROVIDED BY THAT AGENCY.
17. PROVIDE STANDARD MATERIALS AND EQUIPMENT OF MANUFACTURER'S REGULARLY ENGAGED IN THE PRODUCTION OF THESE PRODUCTS. PROVIDE PRODUCTS OF A SINGLE MANUFACTURER WHERE TWO OR MORE UNITS OF THE SAME CALL ARE REQUIRED.
18. ALL WIRING TO BE STRANDED TYPE THWN COPPER UNLESS NOTED OTHERWISE, #12 AWG MINIMUM, ALL WIRING SHALL BE IN CONDUIT, 3/4" MINIMUM. THHN IS ALLOWABLE FOR #10 AND SMALLER.

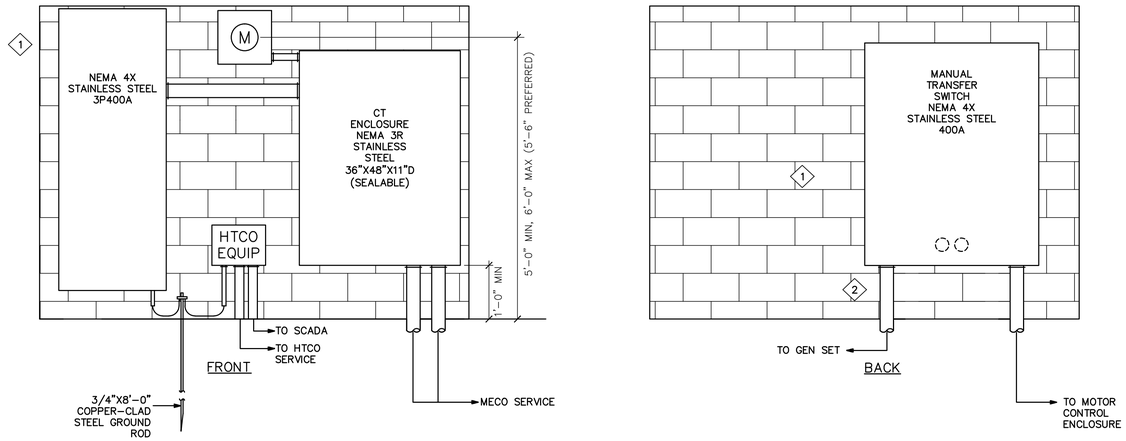

SERVICE EQUIPMENT WALL ELEVATION

SCALE: 3/4" = 1'-0"

PLAN NOTES:

1. SEE SERVICE EQUIPMENT WALL DETAILS.
2. STUB WITH CAP.

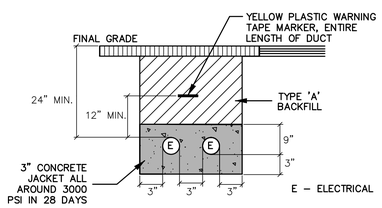

DUCT SECTION - MECO SERVICE FEED

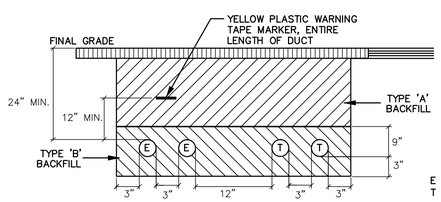

TYPE "A" - BEACH SAND, EARTH, OR EARTH AND GRAVEL. IF EARTH AND GRAVEL, THE MAXIMUM ROCK SHALL BE 1" AND THE MIXTURE SHALL CONTAIN NOT MORE THAN 50% BY VOLUME OF ROCK PARTICLES.

TYPE "B" - BEACH SAND, EARTH, OR EARTH AND GRAVEL. IF EARTH AND GRAVEL, THE MIXTURE MUST PASS A 1/2" MESH SCREEN AND CONTAIN NOT MORE THAN 20% BY VOLUME OF ROCK PARTICLES. CORAL OR CORAL WASTE WILL NOT BE ACCEPTABLE.

E - ELECTRICAL
T - TELEMETRY (IF APPLICABLE)

TYPICAL DUCT SECTION

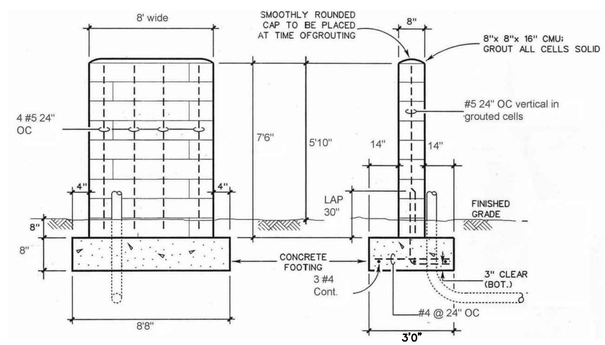

FRONT VIEW

SIDE VIEW

SERVICE EQUIPMENT WALL DETAILS

NOT TO SCALE

AustinTsutsumi
& ASSOCIATES, INC.
CIVIL ENGINEERS I SURVEYORS
HONOLULU I WAILUKU I HILO, HAWAII

501 SUMNER STREET, SUITE 521
HONOLULU, HAWAII 96817

PHONE: 808-533-3646
FAX: 808-526-1267

STATE OF HAWAII
DEPARTMENT OF
HAWAIIAN HOME LANDS

PULEHUNUI
REGIONAL
INFUSTRUCTURE

AUSTIN, TSUTSUMI & ASSOC., INC.
ENGINEERS, SUVEYORS • HONOLULU, HAWAII

MARK P. RICKARD
LICENSED
PROFESSIONAL
ENGINEER
No. 8991-E
HAWAII, U.S.A.

This work was prepared by me or under my supervision and construction of this project will be under my observation. (Observation of construction as defined in Chapter 16-115 Subchapter 1 Definitions of the Hawaii Administrative Rules "Professional Engineers, Architects, Surveyors, and Landscape Architects.")

SIGNATURE — APRIL 30, 2020 EXP. DATE OF THE LICENSE

0 1 2
LINE IS 2 INCHES AT FULL SIZE
(If NOT 2-inches : Scale Accordingly)

REVISION	DATE	BRIEF	BY

Project No:	16-576
Scale:	AS NOTED
Date:	1/22/19
Designed By:	MPR
Drawn By:	AKK
Checked By:	MPR

REGIONAL WWTP
DETAILS

DWG. NO.

EB-3.1

SHEET OF XX

FILE	POCKET	FOLDER	NO.

JOB NO. 0-11-056.004
FN: H:\ACAD2\2019-60.01 PULEHUNUI GRAVITY SEWER WWTP\DRAWINGS\PHASE B\EB-3.1R.DWG

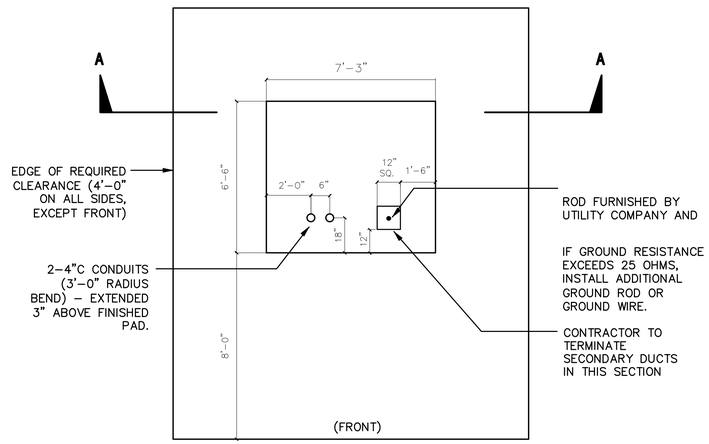

PLAN VIEW

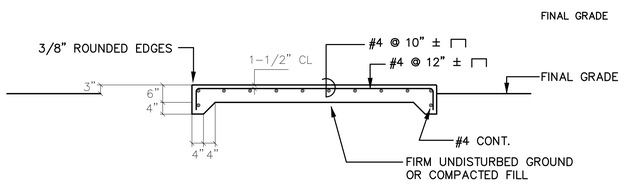

SECTION "A-A"

THREE PHASE TRANSFORMER PAD

NOT TO SCALE

CONTRACTOR NOTES:

1. THE CONTRACTOR IS TO FURNISH MATERIALS AND CONSTRUCT THE FACILITIES FOR THE PADMOUNT TRANSFORMER INCLUDING THE CONCRETE PAD. PRIMARY AND SECONDARY DUCTS AND ANCHOR BOLTS. CONCRETE CURB AND ROCK FILL AROUND THE PAD, WHEN REQUIRED, SHALL ALSO BE FURNISHED AND INSTALLED BY THE CONTRACTOR.
2. MECO SHALL HAVE 24-HOUR ACCESS TO THE TRANSFORMER WITHOUT GOING THROUGH LOCKED AREAS.
3. MECO SHALL HAVE A MINIMUM OF 10 FEET WIDE VEHICULAR ACCESS TO THE TRANSFORMER INSTALLATION.
4. BENDS DUE TO CHANGES OF GRADE ARE TO HAVE MINIMUM RADIUS OF 20 FEET. THE DUCT IS TO BE PVC SCHEDULE 40 PIPE. THE CONTRACTOR IS TO INSTALL DUCT FROM THE PAD TO THE RISER POLE OR HANDHOLE AS DESIGNATED ON THE PLAN.
5. ONE COPPER WELD GROUND ROD 5/8 INCH DIAM. X 8 FEET LONG IS TO BE PROVIDED AND INSTALLED BY THE CONTRACTOR. THE ROD IS TO EXTEND 6 INCHES ABOVE THE FINISHED PAD. TIE THE ROD TO A WATER PIPE WITH #1/0 COPPER WIRE. THIS TIE MAY BE ELIMINATED WHERE THE WATER PIPE IS MORE THAN 25 FEET AWAY.
6. NO PERMANENT OR TEMPORARY STRUCTURE OR OBJECT SHALL BE ERECTED OR PLACED WITHIN FOUR FEET OF THE EDGE OF THE CONCRETE TRANSFORMER PAD AND 8 FEET IN FRONT, UNLESS APPROVED BY MECO.
7. WHEN THE CONCRETE PAD IS LOCATED IN THE VICINITY OF EXISTING OR FUTURE COMBUSTIBLE MATERIAL, COMBUSTIBLE BUILDINGS, THE CONTRACTOR SHALL PROVIDE SAFEGUARDS A OUTLINED IN THE NEC LATEST REVISION SUBJECT TO THE APPROVAL OF THE CITY & COUNTY BUILDING INSPECTORS.
8. THE FRONT SIDE OF THE CONCRETE PAD SHALL ALWAYS BE LOCATED TO FACE THE VEHICULAR ACCESS AND SHALL BE FREE OF ANY OBSTRUCTIONS AT ALL TIMES.
9. WHEN PARTS OF BUILDING STRUCTURES ARE LOCATED DIRECTLY OVER THE CONCRETE PAD, A MINIMUM CLEARANCE OF 9 FEET FROM THE PAD GRADE IS REQUIRED. THE CUSTOMER SHALL PROVIDE ADEQUATE SAFEGUARDS AS OUTLINED IN THE NEC, LATEST REVISION, AND IS SUBJECT TO APPROVAL OF THE CITY & COUNTY BUILDING INSPECTORS.
10. ALL DUCTLINES SHALL CONTAIN A "MULE TAPE" PULL LINE (WESCO CAT. #072592000 OR EQUIVALENT).
11. AFTER THE CONDUITS ARE INSTALLED, THE CONTRACTOR SHALL PASS A SMOOTH BULLET-SHAPED WOODEN TEST MANDREL THROUGH THE ENTIRE LENGTH OF EACH CONDUIT TO TEST FRO FREEDOM OF BURRS AND OBSTRUCTIONS.
12. A UTILITY STAND-BY MAN IS REQUIRED TO BE AT THE SITE AT THE TIME ANY NON-UTILITY CO. PERSONNEL WILL BE BREAKING INTO OR ENTERING ANY FACILITIES THAT CONTAIN ENERGIZED UTILITY EQUIPMENT OR CABLES. CALL MECO - PHONE 871-777.

LOAD CALCULATIONS:
SERVICE: 480/277V, 3 PHASE, 4 WIRE

BLOWERS (2-20HP) 1 @ 125% & 1 @ 100%	=	45 KVA
BLOWER (FUTURE-20HP)	=	20 KVA
JET AERATOR (10HP)	=	10 KVA
WWTP PLANT PUMPS (2-6HP)	=	12 KVA
INFLUENT PUMPS (2-5HP)	=	10 KVA
BOOSTER PUMPS (3-5HP)	=	15 KVA
SCREW PUMPS (2-2HP)	=	4 KVA
SCREEN (2-0.75HP)	=	2 KVA
UV UNITS (2-4.9KVA)	=	10 KVA
TREATMENT PACKAGE (200A)	=	167 KVA
MISC. (120/208V, LIGHTS/RCPT.)	=	25 KVA
TOTAL LOAD	=	320 KVA
	=	385.9 AMPS @ 480V, 3PH

LUMINAIRE SCHEDULE - NEW

TYPE	SYMBOL	LAMP/WATTAGE	DESCRIPTION	MANUFACTURER
A		23W LED 3500K	4FT WRAP, SURFACE MOUNT	COLUMBIA LAW-4-35-LW-E-U OR EQUAL
AE		23W LED 3500K	SAME AS TYPE A EXCEPT WITH EMERGENCY BATTERY PACK	COLUMBIA LAW-4-35-LW-E-U-ELL14 OR EQUAL
B		22W LED 5000K	LED EXTERIOR WALLPACK, WEATHERPROOF, PHOTOCELL, BRONZE FINISH	HUBBELL LNC-9L-U-5K-3-1-PCU OR EQUAL
C		25W LED 4000K	COMPACT FLOOD, DIE CAST ALUMINUM, WET LOCATION, CORROSION RESISTANT, BRONZE FINISH, POLYCARBONATE SHIELD	HUBBELL FSL-10L-25-4K-M-U-K-DB-PC-F OR EQUAL
D		33W LED 3500K	4FT WRAP, ENCLOSED AND GASKETED, SURFACE MOUNT	COLUMBIA LXEM4-35LW-RP-E-U

PANEL A A.I.C. RATING: 10K

VOLTAGE: 120/208V PHASE: 3 WIRE: 4WSN CIRCUITS: 30

MOUNTING: SURFACE MAIN BRKR: 100A BREAKER: BOLT ON MAIN BUS: 100A

CKT	DESCRIPTION	PHASE A	PHASE B	PHASE C	BRKR	WIRE	CKT	DESCRIPTION	PHASE A	PHASE B	PHASE C	BRKR	WIRE
1	L: SITE POLETOP	1.0			1P20A	#12	2	STRUT SCRN CP	1.0			1P20A	#12
3	L: MCC BUILDING		1.0		1P20A	#12	4	SCREW PRESS CP		1.0		1P20A	#12
5	R: MCC BUILDING			1.0	1P20A	#12	6	UV CP			1.0	1P20A	#12
7	CONTROL POWER	1.0			1P20A	#12	8	GENERATOR AUX LOADS	1.0			1P20A	#12
9	LVL ELMNT, EQ PUMP CP		1.0		1P20A	#12	10	L-SLUDGE		0.3		1P20A	#12
11	MAG FLW MTR, SOLEND			0.4	1P20A	#12	12	OXYGEN MTR/LEVEL			0.4	1P20A	#12
13	FLW MTR	0.4			1P20A	#12	14	PE-1030	0.2			1P20A	#12
15	AE-1031		0.4		1P20A	#12	16	PFB					
17	R: SCREW PRESS			0.4	1P20A	#12	18	UV CONTROLS			2.4	2P	#10
19	UV MAG METER	0.4			1P20A	#12	20	#1	2.4			30A	#10
21	UV LEVEL SENSOR		0.4		1P20A	#12	22	UV CONTROLS		2.4		2P	#10
23	UV SOLENOID			0.4	1P20A	#12	24	#2			2.4	30A	#10
25	PFB						26	PFB					
27	PFB						28	PFB					
29	PFB						30	PFB					
	TOTALS	2.8	2.8	2.2				TOTALS	4.6	3.7	6.2		

TOTAL CONNECTED LOAD: 22.3 KVA
ESTIMATED DEMAND: 1.0
TOTAL EST. DEMAND LOAD: 22.3 KVA 62 A @ V = 208V

* SHUNT TRIP BREAKER REQUIRED
R: DENOTES RECEPTACLE LOAD
L: DENOTES LIGHTING LOAD
E: DENOTES A/C EQUIPMENT

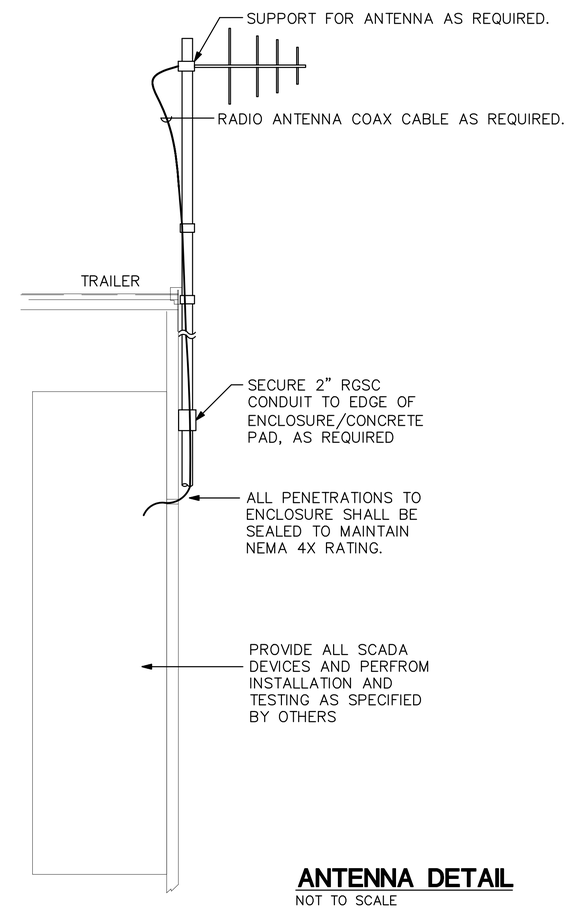

ANTENNA DETAIL

NOT TO SCALE

AustinTsutsumi & ASSOCIATES, INC.
CIVIL ENGINEERS I SURVEYORS
HONOLULU I WAILUKU I HILO, HAWAII
501 SUMNER STREET, SUITE 521
HONOLULU, HAWAII 96817
PHONE: 808-533-3646
FAX: 808-526-1267

STATE OF HAWAII
DEPARTMENT OF
HAWAIIAN HOME LANDS

PULEHUNUI
REGIONAL
INFUSTRUCTURE

AUSTIN, TSUTSUMI & ASSOC., INC.
ENGINEERS, SUVEYORS • HONOLULU, HAWAII

MARK P. RICKARD
LICENSED PROFESSIONAL ENGINEER
No. 8991-E
HAWAII, U.S.A.

This work was prepared by me or under my supervision and construction of this project will be under my observation. (Observation of construction as defined in Chapter 16-115 Subchapter 1 Definitions of the Hawaii Administrative Rules "Professional Engineers, Architects, Surveyors, and Landscape Architects.")

SIGNATURE APRIL 30, 2020
EXP. DATE OF THE LICENSE

0 1 2
LINE IS 2 INCHES AT FULL SIZE
(If NOT 2-inches : Scale Accordingly)

REVISION	DATE	BRIEF	BY

Project No:	16-576
Scale:	AS NOTED
Date:	1/22/19
Designed By:	MPR
Drawn By:	AKK
Checked By:	MPR

REGIONAL WWTP DETAILS

DWG. NO.
EB-3.2
SHEET OF XX

FILE	POCKET	FOLDER	NO.

JOB NO. O-11-056.004
FN: H:\ACAD2\2019-60.01 PULEHUNUI GRAVITY SEWER WWTP\DRAWINGS\PHASE B\EB-3.2R.DWG

NAMEPLATE FEATURES

NAMEPLATE COLOR IS BLACK / WHITE LETTERS
NAMEPLATE ATTACHED WITH STAINLESS STEEL SELF TAPING SCREWS.
1", 3 LINE NAMEPLATE IS SUPPLIED AS STANDARD. 2", 5 LINE SUPPLIED WHEN LINES 4 & 5 HAVE VALUES.
STANDARD CHARACTERS HEIGHT IS 0.1875 [4.76].
17 CHARACTERS MAXIMUM ON LINES 1, 3, 4 & 5 (STANDARD HEIGHT).
15 CHARACTERS MAXIMUM ON LINE 2 (STANDARD HEIGHT).

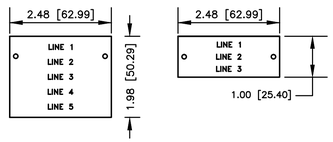

MCC UNIT SCHEDULE

ID		DEVICE INFORMATION			
SECTION NUMBER	CELL	CIRCUIT NAMEPLATE	DEVICE TYPE	DEVICE MOUNTING (SEE NOTES)	DEVICE SIZE
1	G	MAIN BREAKER	CIRCUIT BREAKER	F	400A
2	C	TVSS	TRANSIENT VOLTAGE SURGE SUPPRESSOR (TVSS)	D	200 kA
2	E	MULTI-METER	MULTI-FUNCTION POWER METER		
2	G	DUPLEX PUMP CONTROL PANEL	CIRCUIT BREAKER	F	20A
2	J	DRUM SCREEN CONTROL PANEL	CIRCUIT BREAKER	F	20A
2	M	TRAILER	CIRCUIT BREAKER	F	50A
3	E	PANEL-A	PANELBOARD (PNLBD)	F	100A
3	M	3 PHASE 30 KVA	DISTRIBUTION TRANSFORMER (XFMR)	F	30 kVA
4	G	BLOWER NO. 1	CIRCUIT BREAKER (VFD)	D	50A
4	M	BLOWER NO. 2	CIRCUIT BREAKER (VFD)	D	50A
5	G	BLOWER NO. 3 (FUTURE)	CIRCUIT BREAKER (VFD)	D	50A
5	M	PFB	PFB	D	50A
6	C	EQUALIZATION CONTROL PANEL	CIRCUIT BREAKER	F	25A
6	F	JET AERATOR CONTROL PANEL	CIRCUIT BREAKER	F	25A
6	M	BOOSTER PUMP CONTROL PANEL	CIRCUIT BREAKER	F	40A
7	C	SCREW PRESS CONTROL PANEL	CIRCUIT BREAKER	F	40A
7	M	TREATMENT UNIT MCC	CIRCUIT BREAKER	F	200A
4	G	P-1100A	CIRCUIT BREAKER	D	20A
4	M	P-1100B	CIRCUIT BREAKER	D	20A
6	M	SCADA	RELAY STRUCTURE (RLYSTR)		

NOTES:

1. DEVICE MOUNTING: D = DRAWOUT, F = FIXED

GENERAL NOTES:

1. VERIFY ALL DIMENSIONS AND LAYOUT WITH APPROVED SHOP DRAWINGS
2. MCC SHALL HAVE HINGED DEAD FRONT PANEL BEHIND DOORS.
3. GROUND ALL CONDUITS TO MCC GROUND BUS. EXTEND GROUND BUS THROUGH SECTIONS 1 TO 8.
4. PROVIDE 6" WIRING THROUGH AT BOTTOM OF MCC.
5. MOTOR CONTROLLERS SHALL HAVE PROVISIONS FOR LOCKING IN THE "OFF" POSITION.
6. ALL DOORS SHALL HAVE LEVER TYPE HANDLES.
7. DIMENSIONS OF ALL COMPARTMENTS SHALL BE AS SHOWN.
8. ALL SWITCHES MOUNTED ON THE FRONT OF THE MCC SHALL BE MOUNTED NO HIGHER THAN 70" ABOVE FINISH FLOOR.
9. ENTIRE MOTOR CONTROL CENTER SHALL BE CONSTRUCTED ACCORDING TO UL 845.
10. MOUNT ARC FLASH WARNING SIGN PER NEC 110.16.
11. SWITCHGEAR TO BE NEMA 3R RATED.

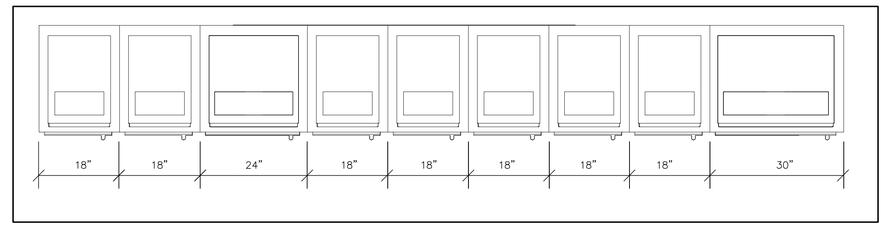

TOP

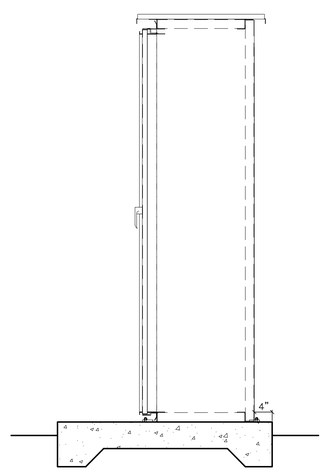

SIDE

FRONT

MOTOR CONTROL ENCLOSURE DETAILS

SCALE: 3/4" = 1'-0"

AustinTsutsumi
& ASSOCIATES, INC.
CIVIL ENGINEERS I SURVEYORS
HONOLULU I WAILUKU I HILO, HAWAII

501 SUMNER STREET, SUITE 521
HONOLULU, HAWAII 96817

PHONE: 808-533-3646
FAX: 808-526-1267

STATE OF HAWAII
DEPARTMENT OF
HAWAIIAN HOME LANDS

PULEHUNUI
REGIONAL
INFUSTRUCTURE

AUSTIN, TSUTSUMI & ASSOC., INC.
ENGINEERS, SUVEYORS • HONOLULU, HAWAII

MARK P. RICKARD
LICENSED PROFESSIONAL ENGINEER
No. 8991-E
HAWAII, U.S.A.

This work was prepared by me or under my supervision and construction of this project will be under my observation. (Observation of construction as defined in Chapter 16-115 Subchapter 1 Definitions of the Hawaii Administrative Rules "Professional Engineers, Architects, Surveyors, and Landscape Architects.")

SIGNATURE — APRIL 30, 2020 — EXP. DATE OF THE LICENSE

0 1 2
LINE IS 2 INCHES AT FULL SIZE
(If NOT 2-inches : Scale Accordingly)

REVISION	DATE	BRIEF	BY

Project No:	16-576
Scale:	AS NOTED
Date:	1/22/19
Designed By:	MPR
Drawn By:	AKK
Checked By:	MPR

REGIONAL WWTP DETAILS

DWG. NO.

EB-3.3

SHEET OF XX

FILE	POCKET	FOLDER	NO.

JOB NO. O-11-056.004
FN: H:\ACAD2\2019-60.01 PULEHUNUI GRAVITY SEWER WWTP\DRAWINGS\PHASE B\EB-3.3R.DWG

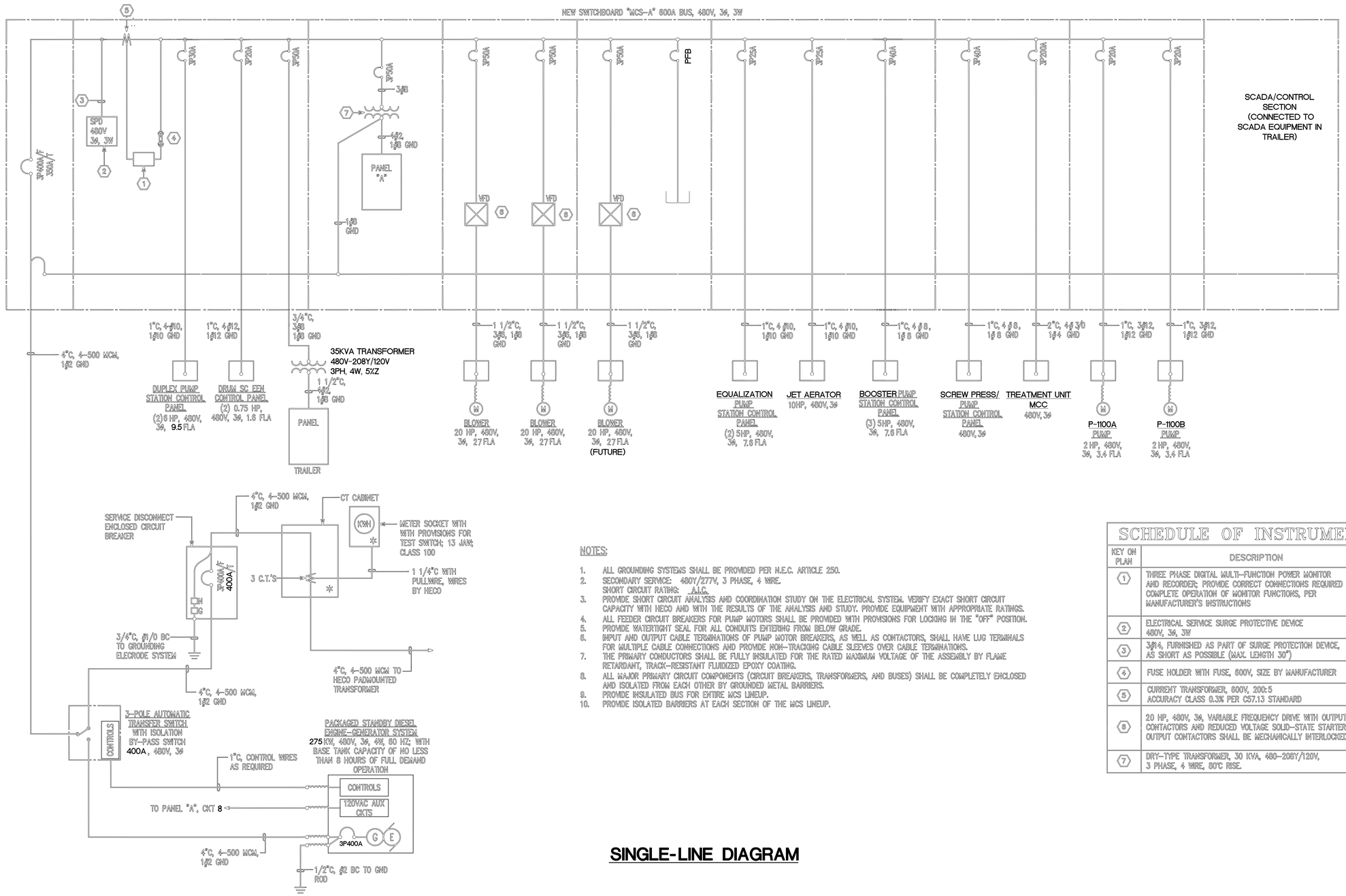

NOTES:

1. ALL GROUNDING SYSTEMS SHALL BE PROVIDED PER N.E.C. ARTICLE 250.
2. SECONDARY SERVICE: 480Y/277V, 3 PHASE, 4 WIRE.
   SHORT CIRCUIT RATING: A.I.C.
3. PROVIDE SHORT CIRCUIT ANALYSIS AND COORDINATION STUDY ON THE ELECTRICAL SYSTEM. VERIFY EXACT SHORT CIRCUIT CAPACITY WITH HECO AND WITH THE RESULTS OF THE ANALYSIS AND STUDY. PROVIDE EQUIPMENT WITH APPROPRIATE RATINGS.
4. ALL FEEDER CIRCUIT BREAKERS FOR PUMP MOTORS SHALL BE PROVIDED WITH PROVISIONS FOR LOCKING IN THE "OFF" POSITION.
5. PROVIDE WATERTIGHT SEAL FOR ALL CONDUITS ENTERING FROM BELOW GRADE.
6. INPUT AND OUTPUT CABLE TERMINATIONS OF PUMP MOTOR BREAKERS, AS WELL AS CONTACTORS, SHALL HAVE LUG TERMINALS FOR MULTIPLE CABLE CONNECTIONS AND PROVIDE NON-TRACKING CABLE SLEEVES OVER CABLE TERMINATIONS.
7. THE PRIMARY CONDUCTORS SHALL BE FULLY INSULATED FOR THE RATED MAXIMUM VOLTAGE OF THE ASSEMBLY BY FLAME RETARDANT, TRACK-RESISTANT FLUIDIZED EPOXY COATING.
8. ALL MAJOR PRIMARY CIRCUIT COMPONENTS (CIRCUIT BREAKERS, TRANSFORMERS, AND BUSES) SHALL BE COMPLETELY ENCLOSED AND ISOLATED FROM EACH OTHER BY GROUNDED METAL BARRIERS.
9. PROVIDE INSULATED BUS FOR ENTIRE MCS LINEUP.
10. PROVIDE ISOLATED BARRIERS AT EACH SECTION OF THE MCS LINEUP.

SCHEDULE OF INSTRUMENTS

KEY ON PLAN	DESCRIPTION
1	THREE PHASE DIGITAL MULTI-FUNCTION POWER MONITOR AND RECORDER; PROVIDE CORRECT CONNECTIONS REQUIRED FOR COMPLETE OPERATION OF MONITOR FUNCTIONS, PER MANUFACTURER'S INSTRUCTIONS
2	ELECTRICAL SERVICE SURGE PROTECTIVE DEVICE 480V, 3ø, 3W
3	3ø14, FURNISHED AS PART OF SURGE PROTECTION DEVICE, AS SHORT AS POSSIBLE (MAX. LENGTH 30")
4	FUSE HOLDER WITH FUSE, 600V, SIZE BY MANUFACTURER
5	CURRENT TRANSFORMER, 600V, 200:5 ACCURACY CLASS 0.3% PER C57.13 STANDARD
6	20 HP, 480V, 3ø, VARIABLE FREQUENCY DRIVE WITH OUTPUT CONTACTORS AND REDUCED VOLTAGE SOLID-STATE STARTER; OUTPUT CONTACTORS SHALL BE MECHANICALLY INTERLOCKED
7	DRY-TYPE TRANSFORMER, 30 KVA, 480-208Y/120V, 3 PHASE, 4 WIRE, 80°C RISE.

SINGLE-LINE DIAGRAM

JOB NO. 0-11-056.004
FN: H:\ACAD2\2019-60.01 PULEHUNUI GRAVITY SEWER WWTP\DRAWINGS\PHASE B\E-3R.DWG

AustinTsutsumi & ASSOCIATES, INC.
CIVIL ENGINEERS I SURVEYORS
HONOLULU I WAILUKU I HILO, HAWAII
501 SUMNER STREET, SUITE 521
HONOLULU, HAWAII 96817
PHONE: 808-533-3646
FAX: 808-526-1267

STATE OF HAWAII
DEPARTMENT OF
HAWAIIAN HOME LANDS

PULEHUNUI
REGIONAL
INFUSTRUCTURE

AUSTIN, TSUTSUMI & ASSOC., INC.
ENGINEERS, SUVEYORS • HONOLULU, HAWAII

MARK P. RICKARD
LICENSED PROFESSIONAL ENGINEER
No. 8991-E
HAWAII, U.S.A.

This work was prepared by me or under my supervision and construction of this project will be under my observation. (Observation of construction as defined in Chapter 16-115 Subchapter 1 Definitions of the Hawaii Administrative Rules "Professional Engineers, Architects, Surveyors, and Landscape Architects.")

SIGNATURE — APRIL 30, 2020 EXP. DATE OF THE LICENSE

0 1 2
LINE IS 2 INCHES AT FULL SIZE
(If NOT 2-inches : Scale Accordingly)

REVISION	DATE	BRIEF	BY

Project No:	16-576
Scale:	AS NOTED
Date:	1/22/19
Designed By:	MPR
Drawn By:	AKK
Checked By:	MPR

REGIONAL WWTP – DETAILS

DWG. NO.
EB-3
SHEET OF XX

FILE	POCKET	FOLDER	NO.

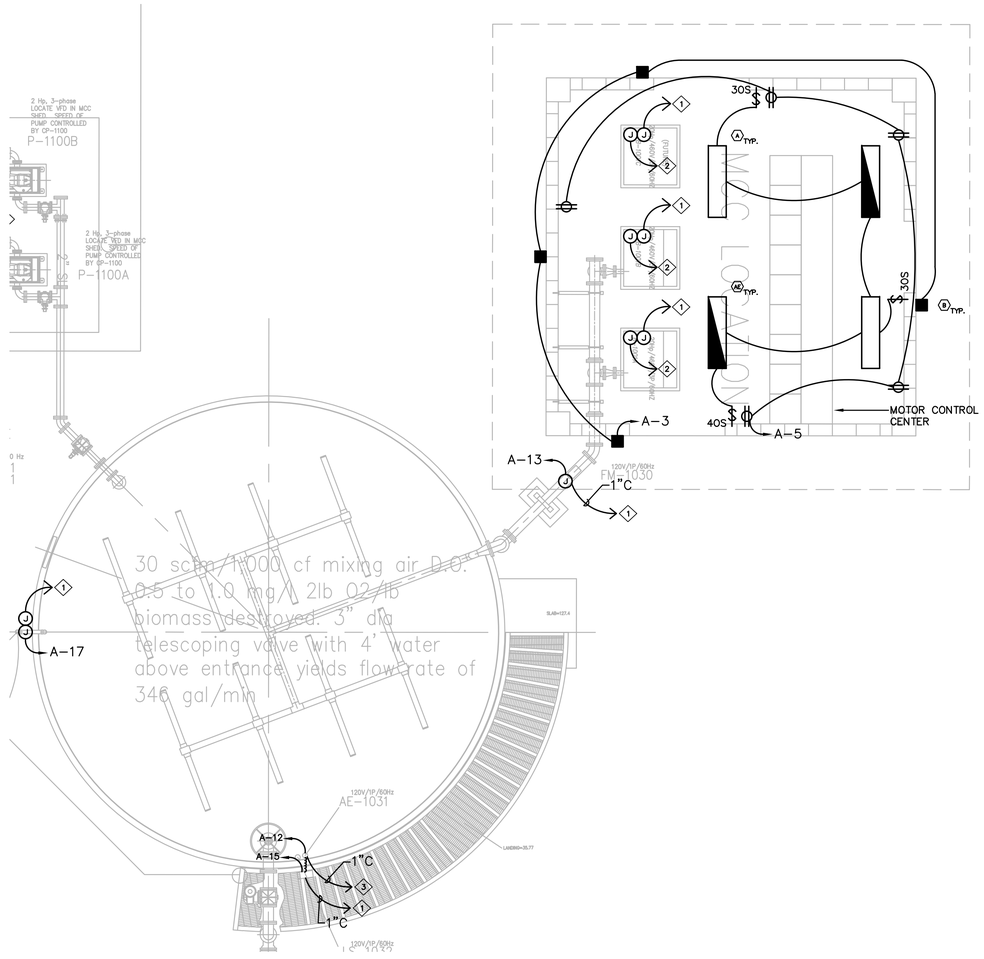

PLAN NOTES:

1. HOMERUN CONTROL WIRE IN 1" CONDUIT TO SCADA SYSTEM.
2. HOMERUN TO MCC LOCATED IN THE MCC BUILDING.
3. CONTROL CABLES TO MCC IN THE MCC BUILDING FOR BLOWER CONTROL.

N

MCC BUILDING

SCALE: 1/4" = 1'-0"

JOB NO. 0-11-056.004
FN: H:\ACAD2\2019-60.01 PULEHUNUI GRAVITY SEWER WWTP\DRAWINGS\PHASE B\E-4R.DWG

AustinTsutsumi
& ASSOCIATES, INC.
CIVIL ENGINEERS I SURVEYORS
HONOLULU I WAILUKU I HILO, HAWAII

501 SUMNER STREET, SUITE 521
HONOLULU, HAWAII 96817

PHONE: 808-533-3646
FAX: 808-526-1267

STATE OF HAWAII
DEPARTMENT OF
HAWAIIAN HOME LANDS

PULEHUNUI
REGIONAL
INFUSTRUCTURE

AUSTIN, TSUTSUMI & ASSOC., INC.
ENGINEERS, SUVEYORS • HONOLULU, HAWAII

MARK P. RICKARD
LICENSED
PROFESSIONAL
ENGINEER
No. 8991-E
HAWAII, U.S.A.

This work was prepared by me or under my supervision and construction of this project will be under my observation. (Observation of construction as defined in Chapter 16-115 Subchapter 1 Definitions of the Hawaii Administrative Rules "Professional Engineers, Architects, Surveyors, and Landscape Architects.")

SIGNATURE APRIL 30, 2020
EXP. DATE OF THE LICENSE

0 1 2
LINE IS 2 INCHES AT FULL SIZE
(If NOT 2-inches : Scale Accordingly)

REVISION	DATE	BRIEF	BY

Project No:	16-576
Scale:	AS NOTED
Date:	1/22/19
Designed By:	MPR
Drawn By:	AKK
Checked By:	MPR

REGIONAL WWTP –
MCC BUILDING

DWG. NO.

EB-4

SHEET OF XX

FILE	POCKET	FOLDER	NO.

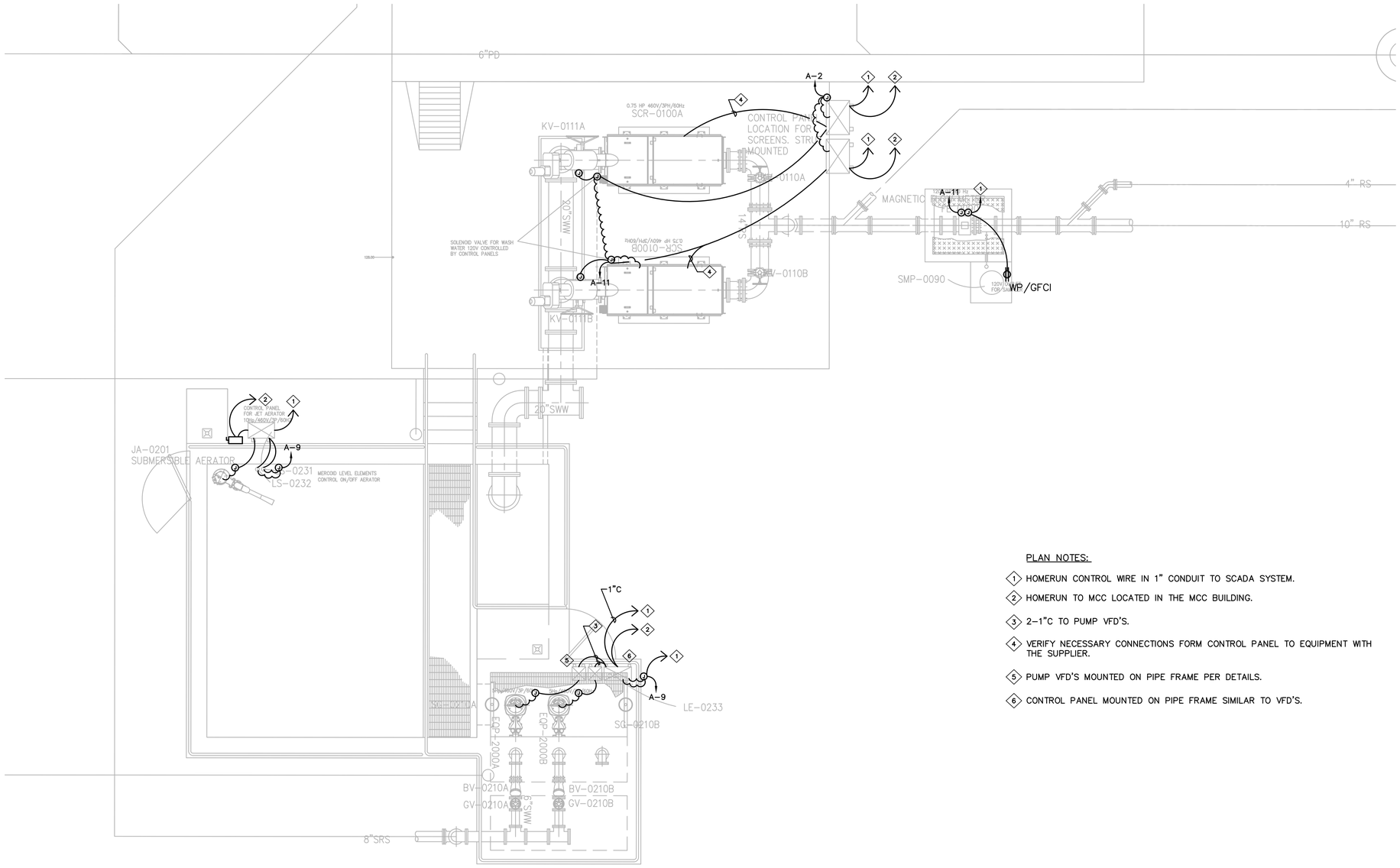

WWTP - HEAD WORKS

SCALE: 1/4" = 1'-0"

PLAN NOTES:

1. HOMERUN CONTROL WIRE IN 1" CONDUIT TO SCADA SYSTEM.
2. HOMERUN TO MCC LOCATED IN THE MCC BUILDING.
3. 2-1"C TO PUMP VFD'S.
4. VERIFY NECESSARY CONNECTIONS FORM CONTROL PANEL TO EQUIPMENT WITH THE SUPPLIER.
5. PUMP VFD'S MOUNTED ON PIPE FRAME PER DETAILS.
6. CONTROL PANEL MOUNTED ON PIPE FRAME SIMILAR TO VFD'S.

AustinTsutsumi
& ASSOCIATES, INC.
CIVIL ENGINEERS I SURVEYORS
HONOLULU I WAILUKU I HILO, HAWAII

501 SUMNER STREET, SUITE 521
HONOLULU, HAWAII 96817

PHONE: 808-533-3646
FAX: 808-526-1267

STATE OF HAWAII
DEPARTMENT OF
HAWAIIAN HOME LANDS

PULEHUNUI
REGIONAL
INFUSTRUCTURE

AUSTIN, TSUTSUMI & ASSOC., INC.
ENGINEERS, SUVEYORS • HONOLULU, HAWAII

MARK P. RICKARD
LICENSED PROFESSIONAL ENGINEER
No. 8991-E
HAWAII, U.S.A.

This work was prepared by me or under my supervision and construction of this project will be under my observation. (Observation of construction as defined in Chapter 16-115 Subchapter 1 Definitions of the Hawaii Administrative Rules "Professional Engineers, Architects, Surveyors, and Landscape Architects.")

SIGNATURE APRIL 30, 2020
EXP. DATE OF THE LICENSE

0 1 2
LINE IS 2 INCHES AT FULL SIZE
(If NOT 2-inches : Scale Accordingly)

REVISION	DATE	BRIEF	BY

Project No:	16-576
Scale:	AS NOTED
Date:	1/22/19
Designed By:	MPR
Drawn By:	AKK
Checked By:	MPR

REGIONAL WWTP –
PARTIAL SITE PLAN 1

DWG. NO.

EB-5

SHEET OF XX

FILE	POCKET	FOLDER	NO.

JOB NO. O-11-056.004
FN: H:\ACAD2\2019-60.01 PULEHUNUI GRAVITY SEWER WWTP\DRAWINGS\PHASE B\E-5R.DWG

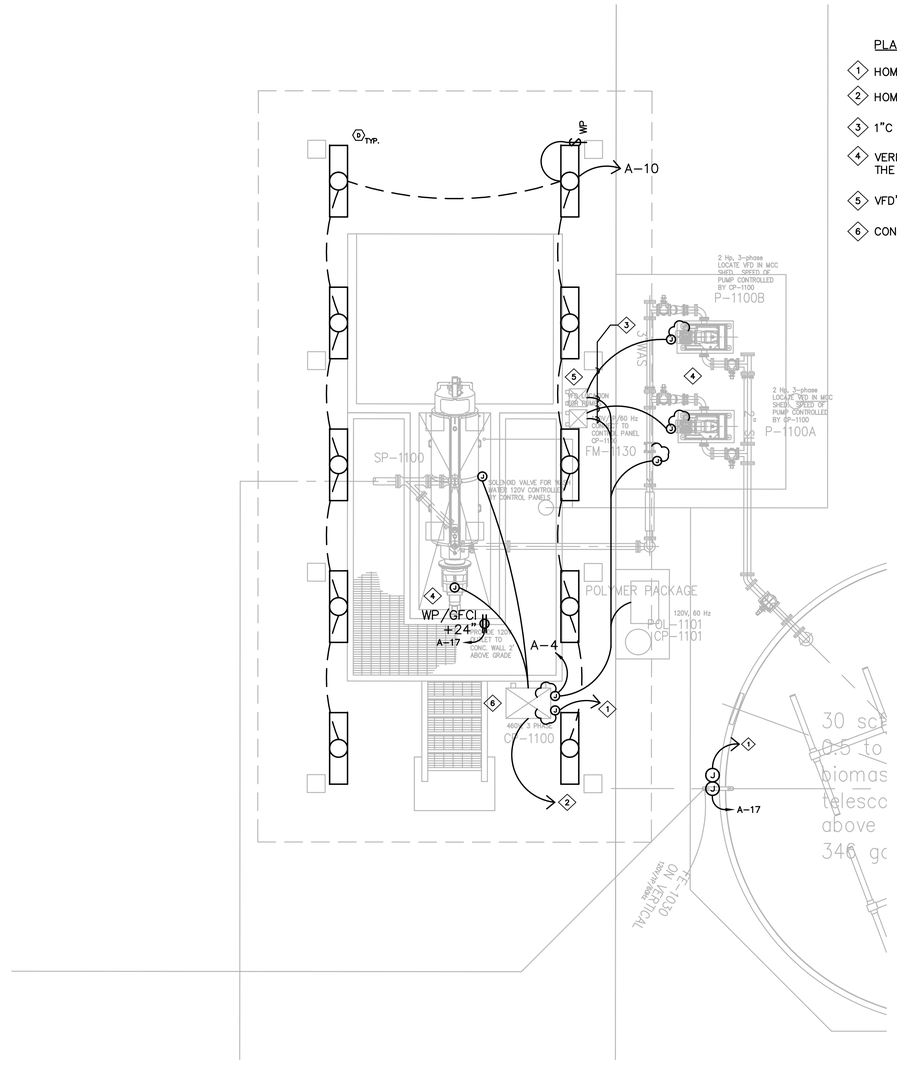

PLAN NOTES:

1. HOMERUN CONTROL WIRE IN 1" CONDUIT TO SCADA SYSTEM.
2. HOMERUN TO MCC LOCATED IN THE MCC BUILDING.
3. 1"C TO PUMP VFD'S.
4. VERIFY NECESSARY CONNECTIONS FORM CONTROL PANEL TO EQUIPMENT WITH THE SUPPLIER.
5. VFD'S MOUNTED ON PIPE FRAME PER DETAILS.
6. CONTROL PANEL MOUNTED ON PIPE FRAME SIMILAR TO VFD'S.

WWTP - SCREW PRESS

SCALE: 1/4" = 1'-0"

JOB NO. 0-11-056.004
FN: H:\ACAD2\2019-60.01 PULEHUNUI GRAVITY SEWER WWTP\DRAWINGS\PHASE B\E-6R.DWG

AustinTsutsumi
& ASSOCIATES, INC.
CIVIL ENGINEERS I SURVEYORS
HONOLULU I WAILUKU I HILO, HAWAII

501 SUMNER STREET, SUITE 521
HONOLULU, HAWAII 96817

PHONE: 808-533-3646
FAX: 808-526-1267

STATE OF HAWAII
DEPARTMENT OF
HAWAIIAN HOME LANDS

PULEHUNUI
REGIONAL
INFUSTRUCTURE

AUSTIN, TSUTSUMI & ASSOC., INC.
ENGINEERS, SUVEYORS • HONOLULU, HAWAII

MARK P. RICKARD
LICENSED PROFESSIONAL ENGINEER
No. 8991-E
HAWAII, U.S.A.

This work was prepared by me or under my supervision and construction of this project will be under my observation. (Observation of construction as defined in Chapter 16-115 Subchapter 1 Definitions of the Hawaii Administrative Rules "Professional Engineers, Architects, Surveyors, and Landscape Architects.")

SIGNATURE — APRIL 30, 2020 — EXP. DATE OF THE LICENSE

0 1 2
LINE IS 2 INCHES AT FULL SIZE
(If NOT 2-inches : Scale Accordingly)

REVISION	DATE	BRIEF	BY

Project No:	16-576
Scale:	AS NOTED
Date:	1/22/19
Designed By:	MPR
Drawn By:	AKK
Checked By:	MPR

REGIONAL WWTP –
PARTIAL SITE PLAN 2

DWG. NO.

EB-6

SHEET OF XX

FILE	POCKET	FOLDER	NO.

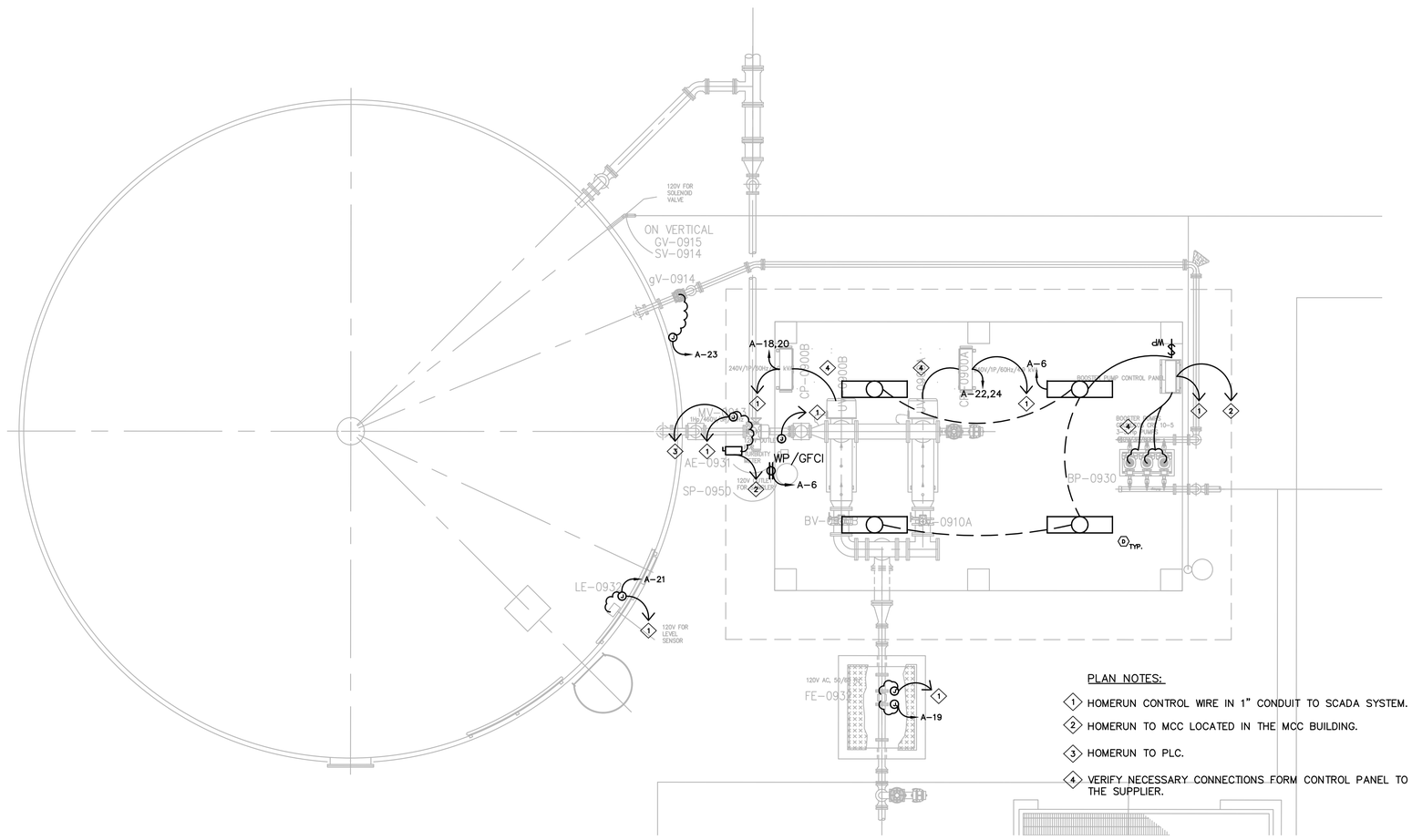

PLAN NOTES:

1. HOMERUN CONTROL WIRE IN 1" CONDUIT TO SCADA SYSTEM.
2. HOMERUN TO MCC LOCATED IN THE MCC BUILDING.
3. HOMERUN TO PLC.
4. VERIFY NECESSARY CONNECTIONS FORM CONTROL PANEL TO EQUIPMENT WITH THE SUPPLIER.

N

WWTP - UV DISINFECTION

SCALE: 1/4" = 1'-0"

JOB NO. 0-11-056.004
FN: H:\ACAD2\2019-60.01 PULEHUNUI GRAVITY SEWER WWTP\DRAWINGS\PHASE B\E-7R.DWG

AustinTsutsumi
& ASSOCIATES, INC.
CIVIL ENGINEERS I SURVEYORS
HONOLULU I WAILUKU I HILO, HAWAII

501 SUMNER STREET, SUITE 521
HONOLULU, HAWAII 96817

PHONE: 808-533-3646
FAX: 808-526-1267

STATE OF HAWAII
DEPARTMENT OF
HAWAIIAN HOME LANDS

PULEHUNUI
REGIONAL
INFUSTRUCTURE

AUSTIN, TSUTSUMI & ASSOC., INC.
ENGINEERS, SUVEYORS • HONOLULU, HAWAII

MARK P. RICKARD
LICENSED PROFESSIONAL ENGINEER
No. 8991-E
HAWAII, U.S.A.

This work was prepared by me or under my supervision and construction of this project will be under my observation. (Observation of construction as defined in Chapter 16-115 Subchapter 1 Definitions of the Hawaii Administrative Rules "Professional Engineers, Architects, Surveyors, and Landscape Architects.")

SIGNATURE — APRIL 30, 2020 EXP. DATE OF THE LICENSE

0 1 2
LINE IS 2 INCHES AT FULL SIZE
(If NOT 2-inches : Scale Accordingly)

REVISION	DATE	BRIEF	BY

Project No:	16-576
Scale:	AS NOTED
Date:	1/22/19
Designed By:	MPR
Drawn By:	AKK
Checked By:	MPR

REGIONAL WWTP –
PARTIAL SITE PLAN 3

DWG. NO.

EB-7

SHEET OF XX

FILE	POCKET	FOLDER	NO.

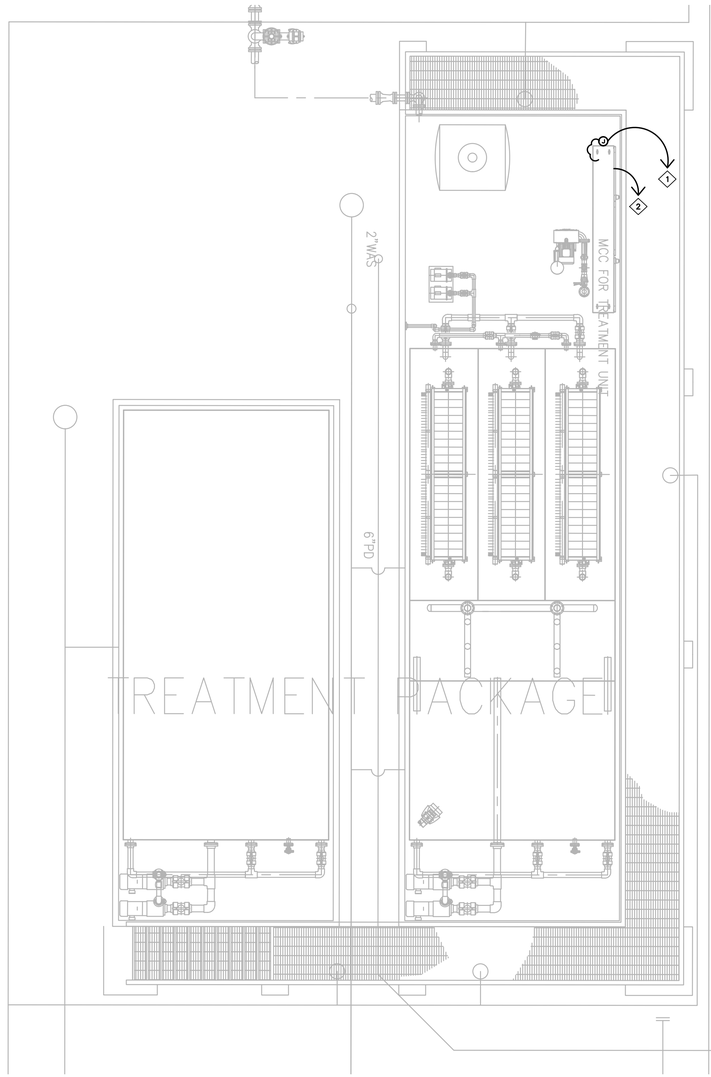

PLAN NOTES:

1. HOMERUN CONTROL WIRE IN 2-1" CONDUIT TO SCADA SYSTEM.
2. HOMERUN TO MCC LOCATED IN THE MCC BUILDING.
3. VERIFY NECESSARY CONNECTIONS FORM CONTROL PANEL TO EQUIPMENT WITH THE SUPPLIER.

N

WWTP - TREATMENT PACKAGE

SCALE: 1/4" = 1'-0"

JOB NO. O-11-056.004
FN: H:\ACAD2\2019-60.01 PULEHUNUI GRAVITY SEWER WWTP\DRAWINGS\PHASE B\EB-8R.DWG

AustinTsutsumi
& ASSOCIATES, INC.
CIVIL ENGINEERS I SURVEYORS
HONOLULU I WAILUKU I HILO, HAWAII

501 SUMNER STREET, SUITE 521
HONOLULU, HAWAII 96817

PHONE: 808-533-3646
FAX: 808-526-1267

STATE OF HAWAII
DEPARTMENT OF
HAWAIIAN HOME LANDS

PULEHUNUI
REGIONAL
INFUSTRUCTURE

AUSTIN, TSUTSUMI & ASSOC., INC.
ENGINEERS, SUVEYORS • HONOLULU, HAWAII

MARK P. RICKARD
LICENSED PROFESSIONAL ENGINEER
No. 8991-E
HAWAII, U.S.A.

This work was prepared by me or under my supervision and construction of this project will be under my observation. (Observation of construction as defined in Chapter 16-115 Subchapter 1 Definitions of the Hawaii Administrative Rules "Professional Engineers, Architects, Surveyors, and Landscape Architects.")

SIGNATURE — APRIL 30, 2020 EXP. DATE OF THE LICENSE

0 1 2
LINE IS 2 INCHES AT FULL SIZE
(If NOT 2-inches : Scale Accordingly)

REVISION	DATE	BRIEF	BY

Project No:	16-576
Scale:	AS NOTED
Date:	1/22/19
Designed By:	MPR
Drawn By:	AKK
Checked By:	MPR

REGIONAL WWTP –
PARTIAL SITE PLAN 4

DWG. NO.
EB-8
SHEET OF XX

FILE	POCKET	FOLDER	NO.

PLAN NOTES:

1. HOMERUN CONTROL WIRE IN CONDUIT TO SCADA SYSTEM.
2. HOMERUN TO MCC LOCATED IN THE MCC BUILDING.
3. VFD'S MOUNTED ON PIPE FRAMES PER DETAILS.
4. CONTROL PANEL MOUNTED ON PIPE FRAME SIMILAR TO VFD'S.

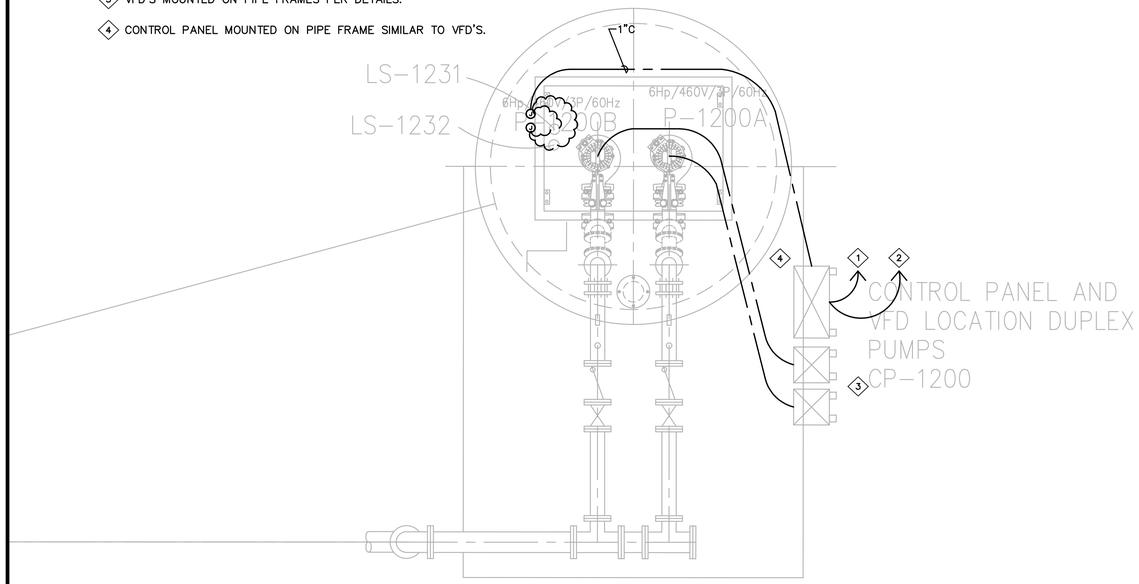

ON-SITE PUMP STATION PLAN AND SECTION

N SCALE: 1/2" = 1'-0"

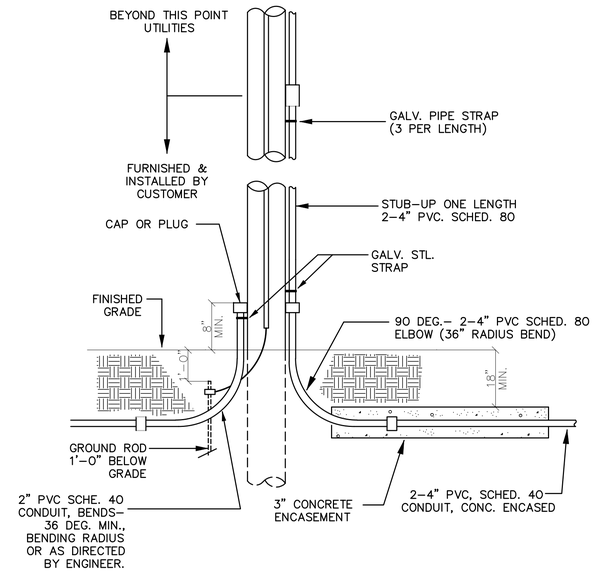

RISER POLE DETAIL

NOT TO SCALE

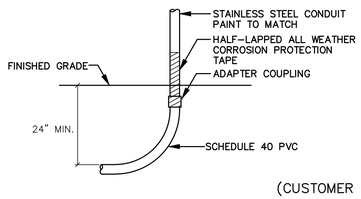

(CUSTOMER SIDE)

CONDUIT TRANSITION DETAIL

NOT TO SCALE

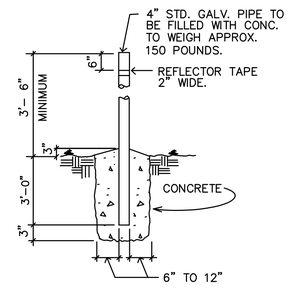

NOTE:

BARRIER POSTS ARE TO BE PAINTED YELLOW ACCORDING TO ANSI SPEC Z535.1 TO COMPLY WITH OSHA STANDARD 1910.144 FOR COLORING CODE. A 2" WIDE STRIPE OF REFLECTIVE TAPE MUST BE PLACED 6" BELOW THE TOP OF THE POST.

UG-30-5000

DETAIL "X"

NOT TO SCALE

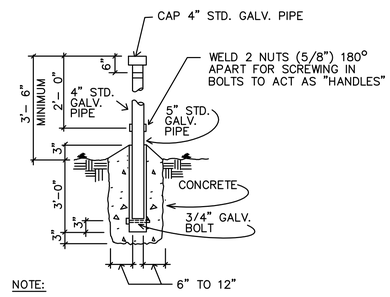

NOTE:

BARRIER POSTS ARE TO BE PAINTED YELLOW ACCORDING TO ANSI SPEC Z535.1 TO COMPLY WITH OSHA STANDARD 1910.144 FOR COLORING CODE. A 2" WIDE STRIPE OF REFLECTIVE TAPE MUST BE PLACED 6" BELOW THE TOP OF THE POST.

THE PIPE THAT IS TO BE PLACED DIRECTLY IN FRONT OF THE DOORS SHALL NOT BE FILLED WITH CONCRETE. THE PIPE SHALL BE CAPPED AND THE WELDED NUTS USED TO SCREW IN BOLTS TO ACT AS HANDLES FOR LIFTING. THE BOLTS ARE TO BE REMOVED AFTER INSTALLATION.

UG-30-5000

DETAIL "X-1"

NOT TO SCALE

AustinTsutsumi
& ASSOCIATES, INC.
CIVIL ENGINEERS I SURVEYORS
HONOLULU I WAILUKU I HILO, HAWAII

501 SUMNER STREET, SUITE 521
HONOLULU, HAWAII 96817

PHONE: 808-533-3646
FAX: 808-526-1267

STATE OF HAWAII
DEPARTMENT OF
HAWAIIAN HOME LANDS

PULEHUNUI
REGIONAL
INFUSTRUCTURE

AUSTIN, TSUTSUMI & ASSOC., INC.
ENGINEERS, SUVEYORS • HONOLULU, HAWAII

MARK P. RICKARD
LICENSED
PROFESSIONAL
ENGINEER
No. 8991-E
HAWAII, U.S.A.

This work was prepared by me or under my supervision and construction of this project will be under my observation. (Observation of construction as defined in Chapter 16-115 Subchapter 1 Definitions of the Hawaii Administrative Rules "Professional Engineers, Architects, Surveyors, and Landscape Architects.")

SIGNATURE APRIL 30, 2020
EXP. DATE OF THE LICENSE

0 1 2
LINE IS 2 INCHES AT FULL SIZE
(If NOT 2-inches : Scale Accordingly)

REVISION	DATE	BRIEF	BY

Project No:	16-576
Scale:	AS NOTED
Date:	1/22/19
Designed By:	MPR
Drawn By:	AKK
Checked By:	MPR

REGIONAL WWTP – PARTIAL SITE PLAN 5/ DETAILS

DWG. NO.

EB-9

SHEET OF XX

FILE	POCKET	FOLDER	NO.

JOB NO. O-11-056.004
FN: H:\ACAD2\2019-60.01 PULEHUNUI GRAVITY SEWER WWTP\DRAWINGS\PHASE B\EB-9R.DWG

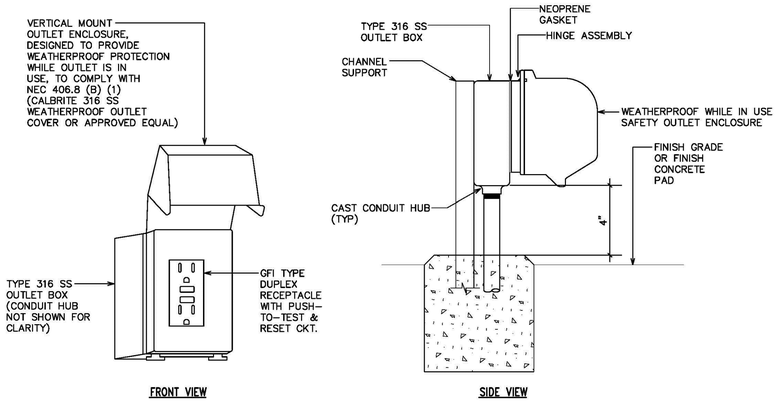

WEATHERPROOF RECEPTACLE DETAIL

NOT TO SCALE

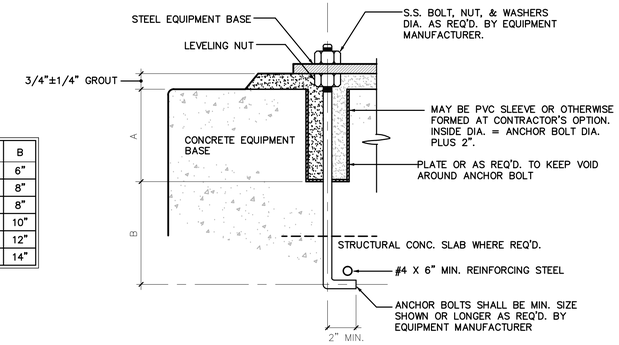

BOLT DIA.	A	B
3/4"	6"	6"
7/8"	6"	8"
1"	8"	8"
1-1/8"	8"	10"
1-1/4"	8"	12"
1-1/2"	10"	14"

ANCHOR BOLT DETAIL

NOT TO SCALE

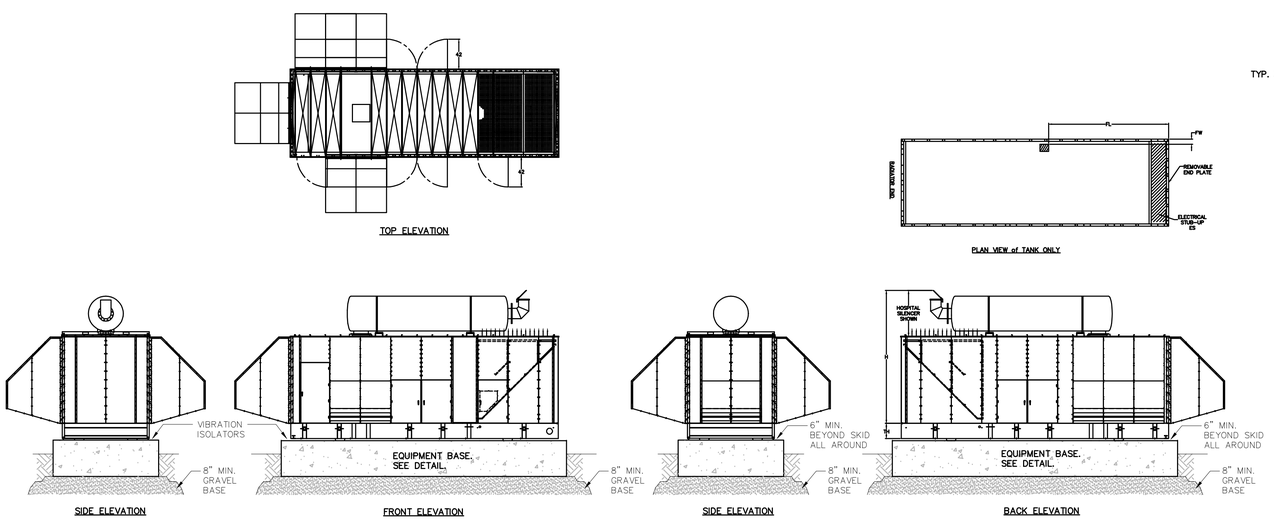

GENERATOR SET ELEVATIONS

NOT TO SCALE

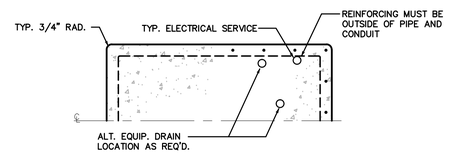

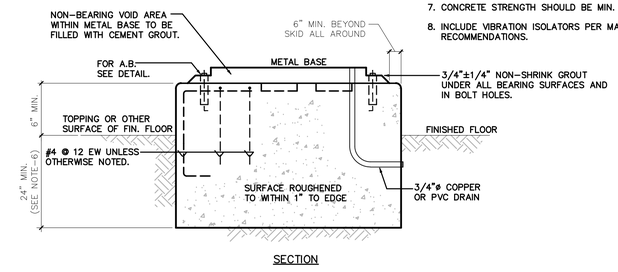

EQUIPMENT BASE DETAIL

NOT TO SCALE

NOTES:

1. ALL EQUIPMENT, INCLUDING TANKS, SHALL HAVE A CONCRETE EQUIPMENT BASE TO SUIT.
2. ANCHOR BOLTS SHALL BE SIZED FOR THE EQUIPMENT LOAD PLUS SEISMIC LOADS (ZONE 2006IBC SEISMIC DESIGN CATEGORY D).
3. ANCHOR BOLTS SHALL BE SET IN POCKETS, EITHER PIPE OR BLOCKOUTS. SEE ANCHOR BOLT DETAIL. ANCHOR BOLT SHALL PENETRATE STRUCTURAL SLAB AS REQ'D TO MEET MINIMUM EMBEDMENT SPECIFIED.
4. DRILLED HOLES WITH A.B. SET IN NON-SHRINK GROUT MAY BE USED IN LIEU OF HOOKED BOLTS. EXPANSION SHIELD TYPE BOLTS SHALL NOT BE USED.
5. ALL PENETRATIONS FOR CONDUIT AND PIPING SHALL BE WITHIN CONCRETE EQUIPMENT PAD. PAD TO BE CONFIGURED ACCORDINGLY.
6. DEPTH OF SLAB TO BE AT MINIMUM THE LENGTH OF ANCHOR BOLTS. PLUS 6". SLAB DEPTH TO BE A MINIMUM OF 30", VERIFY MANUFACTURER'S RECOMMENDATIONS.
7. CONCRETE STRENGTH SHOULD BE MIN. 4000 PSI, IN 28 DAYS.
8. INCLUDE VIBRATION ISOLATORS PER MANUFACTURER'S RECOMMENDATIONS.

AustinTsutsumi & ASSOCIATES, INC.
CIVIL ENGINEERS I SURVEYORS
HONOLULU I WAILUKU I HILO, HAWAII
501 SUMNER STREET, SUITE 521
HONOLULU, HAWAII 96817
PHONE: 808-533-3646
FAX: 808-526-1267

STATE OF HAWAII
DEPARTMENT OF
HAWAIIAN HOME LANDS

PULEHUNUI
REGIONAL
INFUSTRUCTURE

AUSTIN, TSUTSUMI & ASSOC., INC.
ENGINEERS, SUVEYORS • HONOLULU, HAWAII

MARK P. RICKARD
LICENSED PROFESSIONAL ENGINEER
No. 8991-E
HAWAII, U.S.A.

This work was prepared by me or under my supervision and construction of this project will be under my observation. (Observation of construction as defined in Chapter 16-115 Subchapter 1 Definitions of the Hawaii Administrative Rules "Professional Engineers, Architects, Surveyors, and Landscape Architects.")

SIGNATURE — APRIL 30, 2020 EXP. DATE OF THE LICENSE

0 1 2
LINE IS 2 INCHES AT FULL SIZE
(If NOT 2-inches : Scale Accordingly)

REVISION	DATE	BRIEF	BY

Project No:	16-576
Scale:	AS NOTED
Date:	1/22/19
Designed By:	MPR
Drawn By:	AKK
Checked By:	MPR

REGIONAL WWTP – DETAILS

DWG. NO.

EB-10

SHEET OF XX

FILE	POCKET	FOLDER	NO.

JOB NO. O-11-056.004
FN: H:\ACAD2\2019-60.01 PULEHUNUI GRAVITY SEWER WWTP\DRAWINGS\PHASE B\EB-10.DWG

SPECIFICATIONS

FOR

PŪLEHUNUI WASTEWATER SYSTEM

PŪLEHUNUI, MAUI, HAWAII

TMK: (2) 3-8-008: 001 (DLNR), 008, 034, 035

AND 038 (DHHL)

PREPARED FOR

DEPARTMENT OF HAWAIIAN HOME LANDS
91-5420 KAPOLEI PARKWAY
KAPOLEI, HAWAII 96707

BY

AUSTIN, TSUTSUMI & ASSOCIATES, INC.
ENGINEERS • SURVEYORS
HONOLULU • WAILUKU, HAWAII

January 30, 2020

SPECIFICATIONS

FOR

PŪLEHUNUI WASTEWATER SYSTEM

PŪLEHUNUI, MAUI, HAWAII

TMK: (2) 3-8-008: 001 (DLNR), 008, 034, 035

AND 038 (DHHL)

PREPARED FOR

DEPARTMENT OF HAWAIIAN HOME LANDS
91-5420 KAPOLEI PARKWAY
KAPOLEI, HAWAII 96707

BY

AUSTIN, TSUTSUMI & ASSOCIATES, INC.
ENGINEERS • SURVEYORS
HONOLULU • WAILUKU, HAWAII

January 30, 2020

TABLE OF CONTENTS

TECHNICAL SPECIFICATIONS

Page

DIVISION 1. GENERAL REQUIREMENTS

SECTION	01010	SUMMARY OF WORK	01010-1 – 01010-11
	01170	GENERAL PROJECT PROVISIONS	01170-1 – 01170-2
	01300	SUBMITTALS	01300-1 – 01300-7
	01311	CONSTRUCTION SCHEDULING	01311-1 – 01311-2
	01560	ENVIRONMENTAL PROTECTION	01560-1 – 01560-2
	01600	DELIVERY, STORAGE, AND HANDLING	01600-1 – 01600-3
	01700	CONTRACT CLOSEOUT	01700-1 – 01700-2
	01720	QUALITY CONTROL	01720-1 – 01720-3
	01730	OPERATION AND MAINTENANCE DATA	01730-1 – 01730-5
	01740	WARRANTIES AND BONDS	01740-1 – 01740-3

DIVISION 2. SITE WORK

SECTION	02100	SITE PREPARATION	02100-1 – 02100-4
	02200	EARTHWORK	02200-1 – 02200-7
	02221	EXCAVATION, BACKFILLING, AND COMPACTING FOR STRUCTURES	02221-1 – 02221-5
	02222	EXCAVATION, BACKFILLING, AND COMPACTING FOR UTILITIES (SITEWORK)	02222-1 – 02222-6
	02223	EXCAVATION, BACKFILLING, AND COMPACTING FOR PAVEMENT	02223-1 – 02223-4
	02227	AGGREGATE MATERIALS	02227-1 – 02227-3
	02270	SLOPE PROTECTION AND EROSION CONTROL	02270-1 – 02270-7
	02505	PAVING BASE COURSE	02505-1 – 02505-3
	02511	ASPHALTIC CONCRETE PAVING	02511-1 – 02511-6
	02525	CONCRETE CURBS, DRIVEWAYS AND WALKS	02525-1 – 02525-2
	02584	PAVEMENT MARKINGS	02584-1 – 02584-2
	02605	SEWER MANHOLES	02605-1 – 02605-3
	02660	WATER DISTRIBUTION SYSTEM	02660-1 – 02660-7
	02730	SANITARY SEWER SYSTEM	02730-1 – 02730-5
	02830	CHAIN-LINK FENCE AND GATES	02830-1 – 02830-2
	02890	TRAFFIC SIGNAGE	02890-1 – 02890-2

DIVISION 3. CONCRETE

SECTION	03100	CONCRETE FORMWORK	03100-1 – 03100-4
	03200	CONCRETE REINFORCEMENT	03200-1 – 03200-3
	03300	CAST-IN-PLACE CONCRETE	03300-1 – 03300-28

TABLE OF CONTENTS
(Continued)

TECHNICAL SPECIFICATIONS (Continued) Page

	03420	PRECAST CONCRETE PRODUCTS FOR BELOW GRADE CONSTRUCTION	03420-1 – 03420-12

DIVISION 4. MASONRY

SECTION	04230	CEMENT RUBBLE MASONRY	04230-1 – 04230-2
SECTION	04810	UNIT MASONRY ASSEMBLIES	04810-1 – 04810-14

DIVISION 5. METALS

SECTION	05500	FABRICATED METAL	05500-1 – 05500-4

DIVISION 6. WOOD AND PLASTICS

SECTION	06900	FRP GRATING	06900-1 – 06900-2

DIVISION 7. THERMAL AND MOISTURE PROTECTION

NOT USED

DIVISION 8. DOORS AND WINDOWS

NOT USED

DIVISION 9. FINISHES

SECTION	09900	PAINTING	09900-1 – 09900-4
	09910	EPOXY COATING	09910-1 – 09910-3

DIVISION 10. SPECIALTIES

NOT USED

DIVISION 11. EQUIPMENT

SECTION	11000	GENERAL EQUIPMENT REQUIREMENTS	11000-1 – 11000-10
	11052	AUTOMATIC REFRIGERATED SAMPLERS	11052-1 – 11052-6
	11211	OXYGEN PROBES	11211-1 – 11211-4
	11212	TURBIDITY METER	11212-1 – 11212-3
	11213	LEVEL ELEMENTS	11213-1 – 11213-3
	11217	ROTARY LOBE PUMPS	11217-1 – 11217-4
	11221	SUBMERSIBLE NON-CLOG PUMPS	11221-1 – 11221-14

TABLE OF CONTENTS
(Continued)

TECHNICAL SPECIFICATIONS (Continued) Page

11231	AIR DIFFUSERS	11231-1 – 11231-7
11250	MAGNETIC FLOW METER	11250-1 – 11250-2
11261	STATIONARY DAVIT CRANE	11261-1 – 11261-3
11262	POLYMER FEED SYSTEMS	11262-1 – 11262-5
11270	STATIC MIXER	11270-1 – 11270-3
11293	SLIDE GATES	11293-1 – 11293-3
11300	MEMBRANE BIOREACTOR SYSTEM	11300-1 – 11300-29
11332	TANK MOUNTED CYLINDRICAL PERORATED PLATE SCREEN W/ INTEGRATED SCREENINGS WASHING	11332-1 – 11332-16
11334	SLUDGE DEWATERING SCREW PRESS	11334-1 – 11334-13
11346	ULTRAVIOLET DISINFECTION EQUIPMENT	11346-1 – 11346-12
11375	JET AERATOR	11375-1 – 11375-3
11544	PACKAGED BOOSTER PUMPS	11544-1 – 11544-10
11860	BLOWERS, POSITIVE DISPLACEMENT	11860-1 – 11860-10

DIVISION 12. FURNISHINGS

NOT USED

DIVISION 13. SPECIAL CONSTRUCTION

13120	PORTABLE BUILDINGS	13120-1 – 13120-15
13210	FACTORY POWDER COATED BOLTED STEEL TANK	13120-1 – 13120-5
13441	CONTROL LOOP DESCRIPTIONS	13441-1 – 13441-24
13601	PRE-ENGINEERED METAL BUILDING	13601-1 – 13601-15

DIVISION 14. CONVEYING SYSTEMS

NOT USED

DIVISION 15. MECHANICAL

SECTION	15020	TESTING AND DISINFECTING	15020-1 – 15020-3
	15050	VALVES AND APPURTENANCES	15050-1 – 15050-12
	15054	HORIZONTAL DIRECTIONAL DRILLING	15054-1 – 15054-11
	15060	PIPING	15060-1 – 15060-6
	15112	ELECTRIC VALVE OPERATORS	15112-1 – 15112-3
	15115	PROCESS PIPING	15115-1 – 15115-4

TABLE OF CONTENTS
(Continued)

TECHNICAL SPECIFICATIONS (Continued) Page

DIVISION 16. ELECTRICAL

SECTION	16000	GENERAL REQUIREMENTS FOR ELECTRICAL WORK	16000-1 – 16000-8
	16110	RACEWAYS, BOXES, AND SUPPORTS	16110-1 – 16110-4
	16120	600 VOLT CONDUCTORS, WIRE, AND CABLE	16120-1 – 16120-3
	16235	EMERGENCY/STANDBY POWER SYSTEMS GENERATOR SET	16235-1 – 16235-16
	16413	AUTOMATIC TRANSFER SWITCH	16413-1 – 16413-13
	16483	VARIABLE FREQUENCY DRIVES	16483-1 – 16483-14
	16510	INTERIOR LIGHTING	16510-1 – 16510-3
	16975	SUPERVISORY CONTOLS AND DATA ACQUISITION (SCADA) AND PROGRAMMABLE LOGIC CONTROLS (PLC)	16975-1 – 16975-6

DIVISION 17. INSTRUMENTATION

NOT USED

ATTACHMENTS

Geotechnical Engineering Exploration, DHHL Pulehunui Wastewater System, Pulehunui, Maui, Hawaii, November 25, 2019

Amendment to Geotechnical Report: Corrected Field Infiltration Test Results DHHL Pulehunui Wastewater System, Pulehunui, Maui, Hawaii, Dated December 4, 2019

DIVISION 1 - GENERAL REQUIREMENTS

SECTION 01010 - SUMMARY OF WORK

PART 1 – GENERAL

1.1 SCOPE

A. Site work including wastewater treatment plant (WWTP) and pump station construction, driveway and road construction, drainage system, including asphalt swales and retention basins, potable water distribution system for WWTP, sewer system, grading, erosion control measures, landscaping and irrigation reconstruction as needed, and electrical work, all as shown on the plans and specified herein.

1.2 RECORD PLANS

A. Maintain two (2) sets of plans at the job site. Each set shall be marked daily with any changes from the design documents, which are made in the field. Before final payment is made, one set will be forwarded to the Owner with the Contractor's certification that all known field changes are incorporated into the set. The Owner or Owner’s Representative shall have the right to review the Record Drawings at any time and to require corrections, or additions, if deemed necessary.

1.3 ITEMIZED MATERIAL INVOICES

A. The Contractor shall furnish in duplicate detailed and itemized material invoices giving a complete breakdown of the material cost for the purpose of making monthly partial payments on the materials delivered. The values employed in making up the itemized breakdown will be used only for determining the basis of partial monthly payments, and not be considered as fixing a basis for additions to or deductions from the contract price.

1.4 TRADE NAMES AND ALTERNATIVES

A. For convenience in designation on the plans or in the specifications, certain equipment or articles or materials may be designated under a trade name or the name of a manufacturer and his catalog information. The use of alternative equipment or an article or material which is of equal quality and of the required characteristics for the purpose intended will be permitted, subject to the approval of the Owner, in writing, in accordance with the following requirements. Alternatives will be considered only during the bid phase.

B. The burden of proof as to the comparative quality and suitability of alternative equipment or articles or materials shall be upon the Contractor and he shall furnish, at his own expense, all information necessary or related thereto as

required by the Owner. The Owner shall be the sole judge as to the comparative quality and suitability of alternative equipment or articles or materials and his decision shall be final.

C. The above provisions shall not be construed as permitting the use of alternative equipment or articles or materials for equipment or articles or materials which are not designated under a trade name or the name of a manufacturer and his catalog information, and for which the specifications are set forth.

1.5 SANITARY FACILITIES

The following requirements of the Department of Health shall be strictly adhered to:

A. Portable covered receptacles for fecal matter and urine, of the design and number specified by the Division of Environmental Health of the Department of Health shall be provided.

B. No employee will be allowed to deposit fecal matter or urine in any place except in these receptacles. Any infringement of this requirement must result in immediate discharge of the offender.

C. All deposits in these receptacles shall be immediately covered with a chemical solution prescribed by the Division of Environmental Health. These receptacles, with their contents, shall be collected and removed for disposal at the close of each working day. The method of disposal must be satisfactory to the Division of Environmental Health to prevent contamination of any water supply, stream, or other body of water.

D. The receptacles shall be thoroughly cleaned with water and the required chemical solution and returned to their required places for service.

1.6 CONTRACTOR'S SUPERINTENDENT

A. The Contractor shall employ a full time construction superintendent who shall be the Contractor's authorized and responsible agent on the project. This superintendent shall be thoroughly experienced and competent. It shall be the superintendent's duty to cooperate with the Owner and his duly authorized representatives. Superintendent's name and phone number shall be furnished to the Owner.

1.7 SITE VISIT

A. The Owner will arrange for only one supervised pre-bid site visit of the project. Additional site visits may be arranged by the Contractor.

1.8 SUBMITTALS

A. General

1. Submittals of shop drawings, operation and maintenance manuals, data requirements and warranties are a part of the specifications and must be fulfilled. Refer to Section 01300, SUBMITTALS, and Section 11000, GENERAL EQUIPMENT REQUIREMENTS, for additional requirements, including number of copies to be submitted. Failure of the Contractor to comply with these requirements as set forth may result in final payment being withheld from him. Shop drawings, manuals and data are to be sent under the Contractor's signature to the Owner's Representative for distribution to the Engineer, as follows:

   Austin, Tsutsumi and Associates, Inc.
   1871 Wili Pa Loop, Suite A
   Wailuku, Hawaii 96793

   All shop drawings and data submitted must carry the project number, project title, the contracting agency's name, an appropriate title and, in the case of details, small parts, etc., the name of the basic component.

2. Cost of the shop drawings, manuals and data shall be incidental to the various items called for in these specifications.

3. All hazardous materials delivered to the project site shall be supplied with MSDS data from manufacturer of chemicals, paints, etc.

B. Shop Drawings

1. All shop drawings and/or data must be certified and must be approved by the Owner's Representative and Engineer before fabrication is to start or before the order is to be placed.

2. The shop drawings and data will be reviewed and approved only as to general design. Checking is only for conformance with the design concept of the project and compliance with the information given in the contract documents. This check is general only and shall not relieve or in any respect diminish the responsibility of the Contractor for details of design, dimensions, etc., necessary to proper fitting and construction of the work as required by the contract, for achieving the result and performance specified thereunder, for coordination of the work of all trades, and for complete compliance with the contract documents.

C. Operation and Maintenance Manuals

1. See Section 11000, GENERAL EQUIPMENT REQUIREMENTS, for operation and maintenance manual submittal requirements.

1.9 WARRANTIES

A. See Section 11000, GENERAL EQUIPMENT REQUIREMENTS, for warranty submittal requirements.

1.10 TEMPORARY UTILITY SERVICES

A. Contractor shall make his own arrangements for and pay for all temporary utilities required for his work. He shall pay all costs associated with connecting and disconnecting the temporary system. The Contractor must make his own arrangements to provide for his potable water requirements.

1.11 STANDARD SPECIFICATIONS

A. The use of the term "County Standard Specifications" in the Agreement Documents means the "Standard Specifications for Public Works Construction, County of Maui", dated September 1986, with all amendments, and as modified in the Technical Specifications.

B. The use of the term “Standard Specifications” in the Agreement Documents means the “Hawaii Standard Specifications for Road and Bridge Construction, State of Hawaii, Department of Transportation, Highways Division,” 2005 and current amendments.

C. The measurement and payment paragraphs of the Maui Specifications and Standard Specifications do not apply to this project.

1.12 STANDARD DETAILS

A. The use of the term "County Standard Details" in the Agreement Documents means the "Standard Details for Public Works Construction, County of Maui" dated September 1984 with all amendments.

B. The use of the term “State Standard Details” in the Agreement Documents means the “Standard Plans, Department of Transportation, Highways Division, State of Hawaii,” 2008 with all amendments.

1.13 DWS STANDARDS

A. The use of the term "DWS Standards", in the Agreement Documents means the County of Maui, Department of Water Supply's "Water System Standards", dated 2002, and all subsequent amendments and additions including those specifically adopted by the County of Maui.

1.14 ABBREVIATIONS

A. The following capitalized abbreviations refer to specifications, standards, or methods of the respective national association. Disregard abbreviations listed herein, but not mentioned in the specifications.

AASHTO	American Association of State Highway and Transportation Officials
ACI	American Concrete Institute
AFBMA	Anti-Friction Bearing Manufacturers Association
AGA	American Gas Association
AGMA	American Gear Manufacturers' Association
AISC	American Institute of Steel Construction
AISI	American Iron and Steel Institute
AMCA	Air Moving and Conditioning Association
ANSI	American National Standard Institute
ASCE	American Society of Civil Engineers
ASHRAE	American Society of Heating, Refrigerating & Air Conditioning Engineers, Inc.
ASME	American Society of Mechanical Engineers
ASTM	American Society for Testing and Materials
AWWA	American Water Works Association
AWS	American Welding Society
AWPA	American Wood Preservers' Association
CBMA	Certified Ballast Manufacturers' Association
DFPA	Division for Product Approval of the American Plywood Association
Fed. Spec.	Federal Specification
IEEE	Institute of Electrical & Electronics Engineers, Inc.
JIC	Joint Industry Conferences of Hydraulic Manufacturers
MBMA	Metal Building Manufacturers' Association
Mil. Spec.	Military Specification
MSS	Manufacturers' Standardization Society of the Valves and Fittings Industry
NEC	National Electrical Code
NEMA	National Electrical Manufacturers' Association
NESC	National Electric Safety Code

NFPA	National Fire Protection Association
NLMA	National Lumber Manufacturers' Association
NSF	National Science Foundation
NWMA	National Wood Manufacturers' Association
OECI	Overhead Electrical Crane Institute
RLM	RLM Standards Institute, Inc.
SMACNA	Sheet Metal and Air-Conditioning Contractors' National Association
SSPC	Steel Structures Painting Council
TCA	Tile Council of America
TEMA	Tubular Exchanger Manufacturers' Association
UBC	Uniform Building Code
UL	Underwriters' Laboratories, Inc.
WWPA	Western Wood Products Association

B. The numbers and letters following the abbreviation denote the association's serial designation for the specification or standard to which reference is made. Unless a particular issue is designated, all references to the above specifications, standards, or methods, in each instance, refer to the issue in effect (including all amendments) on the date of the Request for Contract Sum.

1.15 CONTRACTOR'S STORAGE

A. The Contractor is required to make his own arrangements for a site to store and handle his materials and equipment as approved by the Owner. Onsite storage should be available.

1.16 CONTRACTOR'S PARKING

A. The Contractor is solely responsible for whatever arrangements he makes for employee parking. The Owner will not police, control or otherwise manage Contractor's parking nor will the Owner make any arrangements for a Contractor's parking area. If the Contractor chooses to permit his employees to park on the site, he is solely responsible for all claims made relative to these vehicles. The Contractor shall fully restore all on-site areas used for parking. The Contractor shall repair all environmental damage caused by the vehicles.

B. Also, see Section 1.26 TRANSPORTATION DEMAND MANAGEMENT PLAN.

1.17 DISCREPANCIES

A. The following principles shall govern the settlement of disputes which may arise over discrepancies in the contract documents.

1. As between figures given on drawings and the scaled measurements, the figures shall govern.
2. As between large-scale drawings and small-scale drawings, the larger scale shall govern.
3. As between drawings and specifications, the requirements of the specifications shall govern. Discrepancies noted shall be reported to the Engineer and the Owner's Representative.

1.18 BOUNDARIES AND BENCH MARKS

A. The Contractor is responsible for the following: 1) employ a licensed professional surveyor to confirm and define the work limits; 2) erect substantial bench marks and preserve them throughout the work; 3) establish and maintain all other grades, lines, levels and bench marks; and 4) verify all grades, lines, levels and dimensions as shown on the drawings and report any errors or inconsistencies in the above to the Owner's Representative and Engineer before commencing work. The Contractor shall be responsible for maintaining the existing physical property boundary points, and shall have any such points removed by the work, restaked by the licensed professional surveyor.

1.19 MEASUREMENTS AND DIMENSIONS

A. Before ordering materials or doing work which is dependent on the proper size of installation, and based upon coordination with existing conditions, the Contractor shall verify all dimensions by taking measurements at the site and shall be responsible for the corrections of same. No consideration will be given to any claim based on differences between the actual dimensions and those indicated on the drawings. Any discrepancies between the drawings and/or the specifications and the existing conditions shall be referred to the Owner's Representative and Engineer for adjustment before any work affected thereby is begun.

1.20 REMOVAL – EQUIPMENT AND DEBRIS

A. The Contractor shall remove all equipment, temporary buildings and unused materials and rubbish resulting from his operation without delay and leave the premises in first class condition.

1.21 REMOVAL – EXISTING UNSUITABLE MATERIALS

A. The cost of the removal of existing unsuitable materials and replacement with suitable material in areas to receive engineered fill, and under structures, pipes, ditches and appurtenances as ordered by the Geotechnical Engineer shall be considered as incidental work to the various contract items. The Owner's Representative will not make additional or separate payment.

1.22 PRESERVATION AND RECOVERY OF HISTORICAL, ARCHAEOLOGICAL AND CULTURAL RESOURCES

A. Should any significant historic, archaeological or cultural remains be located, the Contractor shall notify the Owner, who, in cooperation with the State Historic Preservation Division, will develop and carry out plans to recover the resources and mitigate any adverse effects on the project.

B. If, during excavation, any previously unidentified or unanticipated resources are discovered or found, all activities that may damage or alter such resources shall be temporarily suspended. These resources or cultural remains (prehistoric or historic surface or subsurface) include, but are not limited to, any human skeletal remains or burials; artifacts; shell, midden, bone, charcoal, or other deposits; rocks or coral alignments, pavings, walls or other constructed features; and any indication of agricultural or other uses. Upon such discovery or find, the Contractor shall immediately notify the Owner, and Archaeological Consultant who will initiate action so that prompt and proper data recovery can be undertaken.

1.23 DELAYS BEYOND CONTRACTOR'S CONTROL

A. For delays affecting the critical path caused by Acts of God, or the public enemy, fire, floods, epidemics, quarantine restrictions, labor disputes, freight embargoes and other reasons beyond the Contractor's control, the Contractor may be granted an extension of time provided that:

1. The Contractor notifies the Owner's Representative in writing within five (5) work days after the occurrence of the circumstances described above and states the possible effects on the completion date of the contract.

2. The Contractor submits to the Owner's Representative within ten (10) work days after the request a written statement describing the delay to the project. The extent of delay must be substantiated as follows:

   a. State specifically the reason or reasons for the delay and fully explain in a detailed chronology the effect of this delay to the work and/or the completion date.

   b. Submit copies of purchase order, delivery tag, and any other pertinent documentation to support the time extension request.

   c. Cite the period of delay and the time extension requested.

   d. A statement either that the above circumstances have been cleared and normal working conditions restored as of a certain day or that the above circumstances will continue to prevent completion of the project.

3. Time extensions shall be the exclusive relief granted and no additional compensation will be paid the Contractor for such delays.

B. For delays beyond the control of the Contractor in obtaining necessary permits, one day extension for each day delay may be granted by the Owner's Representative provided the Contractor notifies the Owner's Representative that the permits are not available as soon as the delay occurs. Time extensions shall be the exclusive relief granted on account of such delays. No additional compensation will be paid for these time extensions.

C. For delays in delivery of materials and/or equipment which occur as a result of unforeseeable causes beyond the control and without fault or negligence of both the Contractor, its subcontractor(s) or supplier(s), the Contractor may be granted an extension of time provided that it complies with the following procedures:

1. The Contractor must notify the Owner's Representative in writing within five (5) consecutive working days after it first has any knowledge of delays or anticipated delays and state the effects such delays may have on the completion date of the contract.

2. The Contractor must submit to the Owner's Representative with ten (10) working days after a firm delivery date for the material and equipment is established a written statement as to the delay to the progress of the project. The delay must be substantiated as follows:

a. State specifically the reason or reasons for the delay. Explain in a detailed chronology the effect of this delay to the on the work and/or the completion date.

b. Submit copies of purchase order(s), factory invoice(s), bill(s) of lading, shipping manifest(s), delivery tag(s) and any other pertinent correspondence to support the time extension request.

c. Cite the start and end date of the delay and the days requested therefore. The delay shall not exceed the difference between the originally scheduled delivery date versus the actual delivery date.

3. Time extensions shall be the exclusive relief granted and no additional compensation will be paid the Contractor on account of such delay.

1.24 WORK OF AND CHARGES BY UTILITIES

A. The Contractor shall be responsible for scheduling and coordinating the work with the utility companies and applicable Governmental agencies for permanent service installation and connections or modifications to existing utilities. The Contractor shall make available all portions of the work necessary for the utility companies to complete their work. The Owner shall not bear the risk of any damage to the contract work caused by any utility company, and work of repairing such damage and delay costs must be resolved between the Contractor and the utility company and their insurers. Contractor charges for overhead, supervision, coordination, profit, insurance and any other incidental expenses associated with work performed by the utility companies or government agencies

shall be included in the Contract Sum whether the utility is paid directly by the Owner or by an allowance item in the contract.

1.25 OCCUPANCY AND WORK BY OTHERS

A. The Contractor understands and confirms the Owner's rights to beneficial occupancy of portions of the project prior to completion of the entire project, to let separate contracts, to expect the cooperation of the Contractor with the Owner, with other contractors of the Owner, and with such others as the Owner may direct. The Contractor understands that the Owner's exercise of these rights shall not cause an increase in the Contract Sum and Contract Time, shall not be construed to be an acceptance of the work by the Owner and/or the Owner's Representative and shall not operate to constitute a waiver of claims which the Owner may have against the Contractor.

1.26 TRANSPORTATION DEMAND MANAGEMENT (TDM) PLAN

A. The Contractor shall implement a TDM Plan during the construction phase, consisting of the following:

1. Assign a Transportation Coordinator (TC) to oversee and manage the implementation of the TDM. The TC shall monitor the construction workforce, including subconsultants as it relates to construction generated traffic. The TC shall serve as the point person for receiving and addressing traffic-related concerns of surrounding and affected communities.

2. Construction work hours during the weekdays shall be between 7:00 a.m. and 3:30 p.m.

3. To the extent practicable, deliveries shall be restricted to off-peak hours, between 8:00 a.m. and 3:30 p.m. Delivery and haul trips shall be consolidated to minimize the total number of vehicular trips. Delivery activity shall be monitored by the TC, and coordinated by the TC with vendors and subcontractors.

4. The Contractor shall establish a park-and-ride system, consisting of staging areas or baseyards for construction personnel, namely trade personnel, in locations outside of the project site. Trade personnel would be transported from these staging areas to the project site. Shuttle transport shall be organized by the TC to suit the size of the workforce. This effort shall extend to the subconsultants as well.

PART 2 - PRODUCTS

Not Used

PART 3 - EXECUTION

Not Used

END SECTION

SECTION 01170 - GENERAL PROJECT PROVISIONS

PART 1 – GENERAL

1.1 PRIORITY OF LOCAL STANDARDS

A. State of Hawaii, Standard Specifications for Road and Bridge Construction, 2005 edition with all current amendments governs all work within the State of Hawaii Right-of-Way and all other parts of the project unless otherwise noted.

B. The State Highway Standard Plans as referenced on the drawings govern all work in the State of Hawaii Right-of-Way.

C. The Standard Details for Public Works Construction, County of Maui, 1984 with all current amendments governs work outside the State of Hawaii Right-of-Way.

D. The Water System Standards of the Department of Water Supply, County of Maui with all current revisions govern the potable water and fire protection system.

E. All concrete work unless specified otherwise herein shall be in accordance with all of the provisions of the ACI 301-(latest edition), “Specifications for Structural Concrete for Buildings,” ACI 318-(latest edition), “Building Code Requirements for Reinforced Concrete,” and ACI 347-(latest edition), “Recommended Practice for Concrete Formwork.”

F. Where there is a conflict between technical matters included in these documents and the Standard Drawings and Specifications, or other portions of these documents, the more stringent, in the opinion of the Owner’s Representative and Engineer, shall apply.

G. Where there is a conflict between this section and other individual specification sections, the latter shall govern. Requirements of this section shall apply to all equipment and work unless otherwise stated in individual specifications.

H. Payment for all work of Division 1 shall be considered incidental and payment will be understood to be included as part of the lump sum bid price in the Construction Agreement.

1.2 RELATED WORK

A. Delivery, Storage and Handling are included in Section 01600.

1.3 QUALIFICATIONS/QUALITY CONTROL

A. All equipment furnished shall consist of standard equipment of proven ability, modified as required for the requirements of these Contract Documents.

B. All suppliers and installers shall be properly experienced, reputable, qualified and regularly engaged in the manufacturing of the equipment to be furnished.

C. All equipment shall be designed, constructed and installed in accordance with best practices and methods and shall operate satisfactorily as determined by the Owner's Representative when installed as shown on the Drawings and/or specified.

D. The Contractor shall have sole responsibility for proper functioning of the equipment.

1.4 RIGHT TO KNOW LAW

A. The Contractor shall submit, as required, to the Owner's Representative any Material Safety Data Sheets for all substances or mixture of substances used on the Project by him or his subcontractors prior to commencing any work in accordance with any Federal, State, or local County requirements, if so required.

1.5 HURRICANE PREPAREDNESS PLAN

A. Within 30 days of the Effective Date of the Agreement, submit to the Owner's Representative, a Hurricane Preparedness Plan. The Plan shall describe in detail the necessary measures which the Contractor will perform, at no additional cost to the Owner, in case of a hurricane warning. Revise Plan as required by the Owner's Representative and/or Owner.

B. In the event of inclement weather, the Contractor shall protect the work and materials from damage or injury from the weather. If, in the opinion of the Owner's Representative, any portion of the work or materials has been damaged by reason of failure on the part of the Contractor to so protect the work, such work and materials shall be removed and replaced with new materials and work to the satisfaction of the Owner's Representative.

END SECTION

SECTION 01300 - SUBMITTALS

PART 1 – GENERAL

1.1 SCOPE

A. This section specifies the general methods and requirements of submissions applicable to the following work-related submittals: shop drawings, product data, samples and construction or submittal schedules. Additional general submission requirements are found in Sections 01010. Detailed submittal requirements are specified in the technical specification sections.

1.2 RELATED WORK

A. Construction schedule is included in Section 01311.

1.3 SHOP DRAWINGS, PRODUCT DATA, SAMPLES

A. Shop Drawings

1. Shop drawings, as defined in the General Conditions, and as specified in individual work sections include, but are not necessarily limited to, custom-prepared data such as fabrication and erection/installation (working) drawings, scheduled information, setting diagrams, actual shopwork manufacturing instructions, custom templates, special wiring diagrams, coordination drawings, individual system or equipment inspection and test reports including performance curves and certifications, as applicable to the work.

2. The Contractor shall be responsible for submission in sufficient time to allow ten (10) working days for checking by the Owner's Representative and Engineer without causing delays in delivery of materials.

3. The Contractor shall check all shop drawings regarding measurements, size of members, materials, and details to satisfy himself that they conform to the intent of the drawings and specifications. Shop drawings found to be inaccurate or otherwise in error shall be returned to the subcontractors for correction before submission thereof.

4. All details on shop drawings submitted for approval shall show clearly the relation of the various parts to the main members and lines of the structure, and where correct fabrication of the work depends upon field measurements; such measurements shall be made and noted on the drawings before being submitted for approval.

B. Product Data: Product data as specified in individual sections include, but are not necessarily limited to, standard prepared data for manufactured products (sometimes referred to as catalog data), such as the manufacturer's product specification and installation instructions, availability of colors and patterns,

manufacturer's printed statements of compliance and applicability, roughing-in diagrams and templates, catalog cuts, product photographs, standard wiring diagrams, printed performance curves and operational-range diagrams, production or quality control inspection and test reports and certifications, mill reports, product operating and maintenance instructions and recommended spare parts listing, and printed product warranties, as applicable to the work.

C. Samples: Samples specified in individual sections include, but are not necessarily limited to, physical examples of the work such as sections of manufactured or fabricated work, small cuts or containers of materials, complete units of repetitively-used products, color/texture/pattern swatches and range sets, specimens for coordination of visual effect, graphic symbols, and units of work to be used by the Owner’s Representative for independent inspection and testing, as applicable to the Work.

1.4 CONTRACTOR'S RESPONSIBILITIES

A. The Contractor shall review shop drawings, product data and samples, including those by subcontractors, prior to submission to determine and verify the following:

1. Field measurements.
2. Field construction criteria.
3. Catalog numbers and similar data.
4. Conformance with the specifications.

B. Each shop drawing, sample and product data submitted by the Contractor shall have affixed to it the following certification statement including the Contractor's company name and signed by the Contractor: "Certification Statement: by this submittal, I hereby represent that I have determined and verified all field measurements, field construction criteria, materials, dimensions, catalog numbers and similar data and I have checked and coordinated each item with other applicable approved shop drawings and all Contract requirements." Shop drawings and product data sheets 11 inches x 17 inches and smaller shall be bound together in an orderly fashion and bear the above Certification Statement on the cover sheet. The cover sheet shall fully describe the packaged data and include a listing of all items within the package. Provide to the Owner’s Representative a copy of each submittal transmittal sheet for shop drawings, product data and samples at the time of submittal of said drawings, product data and samples to the Owner’s Representative.

C. The Contractor shall utilize a 9-character submittal identification numbering system in the following manner:

1. The first five digits shall be the applicable specification section number.
2. The next three digits shall be the numbers 001-999 to sequentially number each initial separate item or drawing submitted under each specific section number.

3. The last character shall be a letter, A-Z, indicating the submission, or resubmission of the same Drawings, i.e., A=1st submission, B=2nd submission, C=3d submission, etc. A typical submittal number would be as follows:

   03300-008-B

   03300 = Specification Section for Concrete

   008 = The eighth initial submittal under this specification section

   B = The second submission (first resubmission) of that particular shop drawing

D. Notify the Owner's Representative and Engineer, in writing, at the time of submittal, of any deviations in the submittals from the requirements of the Contract Documents.

E. No portion of the work requiring a shop drawing, sample, or product data shall be started nor shall any materials be fabricated or installed prior to the approval or qualified approval of such item. Fabrication performed, materials purchased, or on-site construction accomplished which does not conform to approved shop drawings and data shall be at the Contractor's risk. The Owner will not be liable for any expense or delay due to corrections or remedies required to accomplish conformity.

F. Project work, materials, fabrication and installation shall conform to approved shop drawings, applicable samples, and product data.

1.5 SUBMISSION REQUIREMENTS

A. Make submittals promptly in such sequence as to cause no delay in the work or in the work of any other Contractor.

B. All submittals shall be sufficiently in advance of construction requirements to provide no less than 14 calendar days for review from the time the Owner's Representative receives them. No less than 21 calendar days will be required for major equipment that requires review by more than one engineering discipline.

C. Number of submittals required:

1. Shop drawings as defined in Paragraph 1.3 A: Six (6) copies.
2. Product data as defined in Paragraph 1.3 B: Six (6) copies.
3. Samples: Submit the number stated in the respective specification sections.

D. Submittals shall contain:

1. The date of submission and the dates of any previous submissions.
2. The project title and number.
3. Contractor identification.

4. The names of:
   a. Contractor
   b. Supplier
   c. Manufacturer
5. Identification of the product, with the specification section number, page and paragraph(s).
6. Field dimensions, clearly identified as such.
7. Relation to adjacent or critical features of the work or materials.
8. Applicable standards, such as ASTM or Federal Specification numbers.
9. Identification of deviations from Contract Documents.
10. Identification of revisions on resubmittals.
11. A blank space suitably sized for Contractor and Engineer stamps.

E. The Engineer will retain two copies of submittals requiring revision.

F. The Engineer will also retain two copies of the final submittal.

1.6 REVIEW OF SHOP DRAWINGS, PRODUCT DATA, WORKING DRAWINGS AND SAMPLES

A. The Engineer's review is for general conformance with the design concept and Contract Documents. Checking is only for conformance with the design concept of the project and general compliance with the information given in the Contract Documents. Markings or comments shall not be construed as relieving the Contractor from compliance with the Contract Documents or from departures therefrom. The Contractor remains responsible for details and accuracy, for coordinating the work with all other associated work and trades, for selecting fabrication processes, for techniques of assembly, and for performing work in a safe manner.

B. The review of shop drawings, data and samples will be general. They shall not be construed as permitting any departure from the Contract requirements; as relieving the Contractor of responsibility for any errors in his work, including details, dimensions and materials; as approving departures from details furnished by the Engineer, except as otherwise provided herein.

C. If the shop drawings, data or samples as submitted describe variations and show a departure from the Contract requirements which the Engineer and/or Owner’s Representative finds to be in the interest of the Owner and to be so minor as not to involve a change in Contract Price or time for performance, the Owner’s Representative may return the reviewed drawings without noting an exception.

D. Submittals will be returned to the Contractor under one of the following codes:

Code 1 - "NO EXCEPTIONS TAKEN" is assigned when there are no notations or comments on the submittal. When returned under this code, the Contractor may release the equipment and/or material for manufacture.

Code 2 - "MAKE CORRECTIONS NOTED" is assigned when a confirmation of the notations and comments is required by the Contractor. The Contractor may release the equipment or material for manufacture; however, all notations and comments must be incorporated into the final product. This confirmation is to address the omissions and nonconforming items that were noted.

Code 3 - "REJECTED" is assigned when the submittal does not meet the intent of the Contract Documents. The Contractor must resubmit the entire package revised to bring the submittal into conformance. It may be necessary to resubmit using a different manufacturer/vendor to meet the Contract Documents.

Code 4 - "REVISE AND RESUBMIT" is assigned when the submittal is in noncompliance with the Contract Documents and must be corrected and the entire package resubmitted. Submittal of additional data is to be received by the Engineer within 15 calendar days of the date of Engineer's transmittal requiring the submittal of this data.

Code 5 - "SUBMIT SPECIFIED ITEM" is assigned where the submittal requires additional data to meet the intent of the Contract Documents. The Contractor must submit the additional data to bring the submittal into conformance.

E. Resubmittals will be handled in the same manner as first submittals. On resubmittals, the Contractor shall direct specific attention, in writing, on the letter of transmittal and on resubmitted shop drawings by use of revision triangles, or other similar methods, to revisions other than the corrections requested by the Engineer and/or Owner’s Representative, on previous submissions. Any such revisions which are not clearly identified shall be made at the risk of the Contractor. The Contractor shall make corrections to any work done because of this type revision that is not in accordance to the Contract Documents as may be required by the Engineer and/or Owner’s Representative.

F. Partial submittals may not be reviewed. The Engineer will be the only judge as to the completeness of a submittal. Submittals not complete will be returned to the Contractor, and will be considered "Rejected" until resubmitted. The Engineer may, at his option, provide a list or mark the submittal directing the Contractor to the areas that are incomplete.

G. If the Contractor considers any correction indicated on the shop drawings to constitute a change to the Contract Documents, the Contractor shall give written notice thereof to the Owner’s Representative at least seven working days prior to release for manufacture.

H. When the shop drawings have been completed to the satisfaction of the Engineer and Owner’s Representative, the Contractor shall carry out the construction in

accordance therewith and shall make no further changes therein except upon written instructions from the Engineer and/or Owner's Representative.

1.7 DISTRIBUTION

A. Distribute reproduction of approved shop drawings and copies of approved product data and samples, where required, to the job site file and elsewhere as directed by the Owner's Representative. Number of copies shall be as directed by the Owner's Representative, but shall not exceed 6.

1.8 PROFESSIONAL ENGINEER (P.E.) CERTIFICATION FORM

A. If specifically required in other sections of these specifications, the Contractor shall submit a P.E. Certification for each item required, in the form attached to this section, completely filled in and stamped by a Hawaii Registered Engineer.

PART 2 - PRODUCTS

Not Used

PART 3 - EXECUTION

Not Used

P.E. CERTIFICATION FORM

The undersigned hereby certifies that he/she is a Professional Engineer registered in the State of Hawaii and that he/she has been employed by (Name of Contractor)_____ to design _____ in accordance with Specification Section_____ for the (Name of Project)_____. The undersigned further certifies that he/she has performed the design of the _____, that said design is in conformance with all applicable local, state and federal codes, rules, and regulations, and that his/her signature and P.E. stamp have been affixed to all calculations and drawings used in, and resulting from, the design.

The undersigned hereby agrees to make all original design drawings and calculations available to the (Insert Name of Owner)_____ or Owner's representative with seven (7) days following written request therefor by the Owner.

_____
P.E. Name

_____
Signature

_____
Address

_____
Contractor's Name

_____
Signature

_____
Title

_____
Address

END SECTION

SECTION 01311 - CONSTRUCTION SCHEDULING

PART 1 – GENERAL

1.1 PROGRAM DESCRIPTION

A. A Critical Path Method (CPM) construction schedule shall be used to control the work and to provide a basis for determining job progress. The construction schedule shall be prepared and updated by the Contractor. All work shall be done in accordance with the established CPM schedule and the Contractor and his subcontractors shall be responsible for cooperating fully with the Owner's Representative and the Owner in effectively utilizing the CPM schedule.

B. The Contractor shall develop his own outline of the work and prepare his proposed CPM schedule. The computer-based schedule shall be the product of a recognized commercial computer software producer.

C. In addition to the CPM schedule, the Contractor shall submit a schedule of submittals and a schedule of values.

D. Preliminary schedules shall be submitted for review within 10 calendar days after the effective date of the Construction Agreement.

1.2 INITIAL CONFERENCE

A. Within 15 calendar days following the receipt of the Notice to Proceed, the Contractor shall meet with the Owner's Representative to discuss and agree upon the proposed standards for the CPM schedule.

B. Approval of the CPM activity network by the Owner's Representative is advisory only and shall not relieve the Contractor of responsibility for accomplishing the work within the contract completion date. Omissions and errors in the approved CPM schedule shall not excuse performance less than that required by the Contract. Approval by the Owner's Representative in no way makes the Owner's Representative an insurer of the CPM schedule's success or liable for time or cost overruns flowing from its shortcomings. The Owner hereby disclaims any obligation or liability by reason of approval by its agent, the Owner's Representative, of the CPM schedule.

1.3 PROGRESS REPORTING

A. Progress under the approved CPM schedule shall be evaluated monthly by the Contractor and the Owner's Representative. Not less than seven days prior to each monthly progress review meeting (which may coincide with the weekly OEC meeting), they shall meet at the jobsite and jointly evaluate the status of each activity on which work has started or is due to start, based on the preceding CPM schedule; to show actual progress, to identify those activities started and those completed during the previous period, to show the estimated time required to

complete or the percent complete of each activity started, but not yet completed, and to reflect any changes indicated for the network. Activities shall not be considered to be complete until they are, in fact, 100 percent complete.

1.4 RESPONSIBILITY FOR SCHEDULE COMPLIANCE

A. Whenever it becomes apparent from the current CPM schedule and CPM Status Report that delays to the critical path have resulted and the contract completion date will not be met, or when so directed by the Owner's Representative, the Contractor shall take any or all of the following actions at no additional cost to the Owner. The Contractor shall submit to the Owner's Representative for approval, a written statement of the steps he intends to take to remove or arrest the delay to the critical path in the approved schedule.

1. Increase construction manpower in such quantities and crafts as will substantially eliminate the backlog of work.

2. Increase the number of working hours per shift, shifts per day, working days per week, the amount of construction equipment, or any combination of the foregoing, sufficiently to substantially eliminate the backlog of work.

3. Reschedule activities to achieve maximum practical concurrency of accomplishment of activities, and comply with the revised schedule.

B. If, when so requested by the Owner's Representative, the Contractor fails to submit a written statement of the steps he intends to take or fails to take such steps, the Owner's Representative may direct the Contractor to increase the level of effort in manpower (trades), equipment, and work schedule (overtime, weekend and holiday work, etc.) to be employed by the Contractor in order to remove or arrest the delay to the critical path in the approved schedule, and the Contractor shall promptly provide such higher level of effort at no additional cost to the Owner.

PART 2 - PRODUCTS

Not Used

PART 3 - EXECUTION

Not Used

END SECTION

01560 - ENVIRONMENTAL PROTECTION

PART 1 - GENERAL

1.1 RELATED DOCUMENTS

A. Drawings and general provisions of the Contract, including General and Supplementary Conditions and Division 1 Specification Sections, apply to this Section.

1.2 REQUIREMENTS

A. Comply with the following requirements for environmental protection in performing all construction activities.

B. Comply with all governing laws, regulations and ordinances.

C. Reference is made to the NPDES Permit and Stormwater Runoff Control Practices and Maintenance Plan.

1.3 RUBBISH

A. No burning of debris and waste materials shall be permitted on the project site.

B. No burying of debris and waste materials, except for materials which are specifically indicated elsewhere in these specifications or plans as suitable for backfill, shall be permitted on project site.

C. All unusable debris and waste materials shall be hauled away to appropriate offsite dump areas. During loading operations, debris and waste materials shall be watered down to allay dust.

D. No dry sweeping shall be permitted in cleaning rubbish and fines, which can become airborne, from paved areas. Vacuuming, wet mopping or wet or damp sweeping is required; however, washing of debris and fines into drainage ways or drainage systems shall be strictly prohibited.

E. Clean up shall include collection of all waste paper and wrapping materials, cans, bottles, construction waste materials and other objectionable materials, and removal as required. Frequency of clean up shall coincide with rubbish producing events.

1.4 DUST

A. Dust shall be kept within acceptable levels at all times including non-working hours, weekends and holidays, in compliance with State Department of Health, Public Health Regulations.

B. Method of dust control and all costs incurred therefore shall be the responsibility of the Contractor. Use of chemicals for dust control is not permitted.

C. Contractor shall responsible for all damage claims.

D. Provide protective covering over existing and complete work.

1.5 NOISE

A. Noise shall be kept within acceptable levels at all times in compliance with State Department of Health, Public Health Regulations.

B. Contractor shall obtain and pay for community noise permit from State Department of Health when construction equipment or other devices emit noise at levels exceeding allowable limits.

1.6 EROSION

A. During interim grading operations, grade shall be maintained so as to preclude any damages to adjoining property from water and eroding soil. Temporary berms, cut-off ditches, and other provisions which may be required because of Contractor's method of operation shall be installed at no cost to the Owner.

1.7 EQUIPMENT MAINTENANCE

A. Any fuel, oil, grease, battery electrolyte or engine coolant chemicals spilled, dropped or otherwise released onto the ground surface shall be picked up and removed to a legal disposal site at the Contractor's expense. No such material shall be permitted to enter any natural or artificial drainage channel.

END SECTION

SECTION 01600 - DELIVERY, STORAGE AND HANDLING

PART 1 – GENERAL

1.1 SCOPE OF WORK

A. This section specifies the general requirements for the delivery, handling, storage and protection for all items required in the construction of the work. Specific requirements, if any, are specified with the related item.

1.2 TRANSPORTATION AND DELIVERY

A. All parts and equipment shall be properly crated, packaged, sealed and/or otherwise protected so that no damage or deterioration will occur during shipping, delivery, handling, or while stored. Transport and handle items in accordance with manufacturer's instructions.

B. Heavy items shall be packed for fork lift truck handling and/or with hook or sling for crane handling. All items subject to water damage shall be packed or provided with waterproof covers suitable for outdoor storage. All packing shall be strong, durable, and rugged and shall be designed to prevent uneven forces on the items. Fragile items shall be suitably protected with special padding and shall be so marked.

C. Schedule delivery to reduce long term on-site storage prior to installation and/or operation. Under no circumstances shall equipment be delivered to the site more than one month prior to installation without written authorization from the Owner.

D. Coordinate delivery with installation to ensure minimum holding time for items that are hazardous, flammable, easily damaged or sensitive to deterioration.

E. Deliver products to the site in manufacturer's original sealed containers or other packing systems, complete with instructions for handling, storing, unpacking, protecting and installing.

F. All items delivered to the site shall be unloaded and placed in a manner which will not hamper the Contractor's normal construction operation or those of subcontractors and other contractors and will not interfere with the flow of necessary traffic.

G. Provide necessary equipment and personnel to unload all items delivered to the site.

H. Promptly inspect shipment to assure that products comply with requirements, quantities are correct, and items are undamaged. For items furnished by others (i.e., Owner, other Contractors), perform inspection in the presence of the Owner or Owner’s Representative. Notify Owner verbally, and in writing, of any problems.

I. Items shall not be shipped until factory testing (where required) and submittals comply with specification requirements.

1.3 STORAGE AND PROTECTION

A. Store and protect products in accordance with the manufacturer's instructions, with seals and labels intact and legible. Storage instruction shall be studied by the Contractor and reviewed with the Owner. Instruction shall be carefully followed and a written record of this kept by the Contractor. Arrange storage to permit access for inspection.

B. Store loose granular materials on solid flat surfaces in a well-drained area. Prevent mixing with foreign matter. Provide temporary covers for such material.

C. Cement and lime shall be stored under a roof and off the ground and shall be kept completely dry at all times. All structural, miscellaneous and reinforcing steel shall be stored off the ground or otherwise to prevent accumulations of dirt or grease, and in a position to prevent accumulations of standing water and to minimize rusting. Beams shall be stored with the webs vertical. Precast concrete shall be handled and stored in a manner to prevent accumulations of dirt, standing water, staining, chipping or cracking. Brick, block and similar masonry products shall be handled and stored in a manner to reduce breakage, cracking and spalling to a minimum.

D. All mechanical and electrical equipment and instruments subject to corrosive damage by the atmosphere if stored outdoors (even though covered by canvas) shall be stored in a weathertight building to prevent deterioration or damage due to weather. The building may be a temporary structure on the site or elsewhere, but it must be satisfactory to the Owner. Building shall be provided with adequate ventilation to prevent condensation. Maintain temperature and humidity within range required by manufacturer.

1. All equipment shall be stored fully lubricated with oil, grease and other lubricants unless otherwise instructed by the manufacturer.

2. Moving parts shall be rotated a minimum of once weekly to insure proper lubrication and to avoid metal-to-metal "welding." Upon installation of the equipment, the Contractor shall start the equipment, at least half load, once weekly for an adequate period of time to ensure that the equipment does not deteriorate from lack of use.

3. Lubricants shall be changed upon completion of installation and as frequently as required thereafter during the period between installation and acceptance. New lubricants shall be put into the equipment at the time of acceptance.

4. Prior to acceptance of the equipment, the Contractor shall have the manufacturer inspect the equipment and certify that its condition has not been detrimentally affected by the long storage period. Such certifications by the manufacturer shall be deemed to mean that the equipment is judged by the manufacturer to be in a condition equal to that of equipment that has been shipped, installed, tested and accepted in a minimum time period. As such, the manufacturer will guaranty the equipment equally in both instances. If such a certification is not given,

the equipment shall be judged to be defective. It shall be removed and replaced at the Contractor's expense.

1.4 SAFETY PRECAUTIONS

A. The Contractor shall observe all appropriate safety procedures and reasonable precautions when handling, storing, and utilizing chemicals at the site.

PART 2 - PRODUCTS

Not Used

PART 3 - EXECUTION

Not Used

END SECTION

SECTION 01700 - CONTRACT CLOSEOUT

PART 1 – GENERAL

1.1 SCOPE

A. This section specifies administrative and procedural requirements for project closeout including, but not limited to, closeout procedures, final cleaning, adjusting, project record documents, spare parts and maintenance materials.

1.2 RELATED WORK

A. Quality control testing, including full facility operational tests by Contractor and by Owner, is included in Section 01720.

B. Warranties and bonds are included in Section 01740.

1.3 RECORD DOCUMENTS

A. Maintain on site, one set (unless otherwise noted) of the following documents. Actual revisions to the work shall be recorded in these documents:

1. Contract Drawings (two sets).
2. Specifications.
3. Addenda.
4. Change orders and other modifications to the Contract.
5. Reviewed shop drawings, product data and samples.

B. Store record documents separate from documents used for construction.

C. Record information concurrent with construction progress.

D. Specifications: Legibly mark and record at each PRODUCT section description of actual products installed, including the following:

1. Manufacturer's name and product model and number.
2. Product substitutions or alternates utilized.
3. Changes made by Addenda and Modifications.

E. Contract Drawings and Shop Drawings: Legibly mark each item to record actual construction, including:

1. Measured horizontal and vertical locations of underground utilities and appurtenances, referenced to permanent surface improvements.
2. Measured locations of internal utilities and appurtenances concealed in construction, referenced to visible and accessible features of the work.
3. Field changes of dimension and detail.

4. Details not on original Contract Drawings.

F. Submit documents to Owner's Representative with final application for payment.

1.4 CLOSEOUT PROCEDURES

A. Submit written certification that Contract Documents have been reviewed, work has been inspected, and that work is complete in accordance with Contract Documents and ready for Owner's Representative's inspection.

B. Provide submittals to Owner's Representative that are required by governing or other authorities.

C. Submit final application for payment identifying total adjusted contract sum, previous payments and sum remaining due.

1.5 FINAL CLEANING

A. Complete the following cleaning operations before requesting inspection for Certification of Substantial Completion.

1. Remove labels that are not permanent labels.

2. Wipe surface of mechanical and electrical equipment. Remove excess lubrication and other substances. Clean plumbing fixtures to a sanitary condition. Clean light fixtures and lamps.

3. Clean the site, including landscape development areas, of rubbish, litter and other foreign substances. Sweep paved areas broom clean; remove stains, spills and other foreign deposits. Rake grounds that are neither paved nor planted, to a smooth, even-textured surface.

4. Clean adjacent structures and improvements of all dust, dirt and debris caused by removal operations, as acceptable to the Owner's Representative. Return native areas to condition existing prior to the start of the work.

1.6 ADJUSTING

A. Adjust operating products and equipment to ensure smooth and unhindered operation.

PART 2 - PRODUCTS

Not Used

PART 3 - EXECUTION

Not Used

END SECTION

SECTION 01720 - QUALITY CONTROL

PART 1 – GENERAL

1.1 TESTING REQUIREMENTS

A. All equipment, materials, equipment installation, pipes, and workmanship included in this Contract, and/or specified herein, shall be tested by the Contractor, as specified before any facility or part thereof, is put into operation. For the purpose of this section, “equipment" shall mean mechanical equipment, electrical device or system, or instrumentation device or system, or material. Inspections and tests shall be as specified herein, and as specified in the individual sections, and shall be made to determine whether the equipment is in good order and condition, has been properly manufactured, assembled, installed, aligned, adjusted, calibrated, and connected. Any changes, adjustments, replacement, or modifications required to make the equipment operate and/or make the equipment installation as specified shall be carried out by the Contractor as part of the work under this contract, at no additional cost to the Owner.

B. No tests specified herein shall be implemented until the item(s) to be tested has been inspected and permission given by the Owner’s Representative for the test. The Contractor remains responsible to inspect the item(s) before testing to satisfy himself that the item(s) can be started without damage to the item(s) or other items or any personnel. Unless specified otherwise, all costs of testing shall include, but are not limited to, temporary facilities, connections, labor, materials, and testing equipment. All costs of testing shall be borne by the Contractor. Water for the operational testing and initial operation shall be furnished by the Contractor as specified. Inspections and tests, unless otherwise specified or accepted, shall be adequate to demonstrate compliance with specified performance requirements. Testing equipment shall be furnished by the Contractor and shall be appropriate for the use intended. The testing equipment shall be calibrated and/or certified by an approved agency, as often as necessary to insure its proper operation in accordance with the specifications.

C. Where, in case of an otherwise satisfactory test, any doubt, dispute, or difference should arise between the Owner and the Contractor regarding the test results, the methods, or equipment used in the carrying out such tests, the Owner may order the test to be repeated. Repeated tests as may be necessary to achieve the specified requirements shall be made by the Contractor at no additional cost to the Owner.

D. The Contractor, in addition to the quality control testing specified under this section of the specifications, shall perform <u>all</u> material mill tests and equipment performance tests (factory and field) and provide the Owner with written test reports (as required in the specifications) to demonstrate compliance with the technical specifications (Divisions 2 through 16).

E. All tests which require the services of a laboratory to determine compliance with the Contract Documents shall be performed by an independent commercial testing laboratory acceptable to the Owner. The laboratory shall be staffed with experienced technicians, properly equipped and fully qualified to perform the tests in accordance with the specified standards.

F. Contractor shall obtain written acceptance of the independent (third party) testing laboratory to be used from the Owner, prior to having services performed.

1.2 RELATED WORK

A. Contract closeout is included in Section 01700.

1.3 TESTING AND INSPECTION SERVICES

A. The Contractor shall be responsible, as a minimum, for the following testing and providing data to the Owner's Representative for:

1. Proposed materials for concrete mixes in accordance with Section 03300.
2. Bacteriological sampling and testing of disinfection for potable water pipelines and storage structures.
3. Aggregate road mixes and asphalt mixtures composition and gradation tests.
4. Bedding, embankment and backfill gradation tests.
5. Concrete testing services in accordance with Section 03300.

B. The testing laboratory shall perform all laboratory tests in the shortest time consistent with the specified standards and furnish a written report of each test directly to the Owner's Representative without delay.

C. The Owner shall retain the services of an independent testing laboratory for the purposes of compaction and field testing of soil subgrade, base course and pavement in accordance with the applicable Technical Specification sections.

D. Contractor shall furnish all sample materials and cooperate in the sampling and field testing activities, interrupting construction work when necessary. Contractor shall furnish personnel, equipment and facilities to perform sampling and field-testing activities, and to deliver samples and test specimens to the independent testing laboratory. When sampling or testing activities are performed in the field by testing laboratory personnel, Contractor shall furnish all assistance necessary for proper results.

E. The Owner shall retain the services of an independent licensed special inspector to certify that installation of the reinforcing bars is in conformance with the plans.

1.4 TRANSMITTAL OF TEST INFORMATION AND REPORTS

A. Written reports of test results and engineering data required to establish the acceptability of equipment and materials proposed for use in the work shall be submitted in accordance with the requirements of Section 01300 and the respective specification sections.

B. A written report of each test performed by a testing laboratory in the laboratory or field shall be submitted to the Owner within three (3) calendar days of the completion of the test. Two (2) copies of each test report shall be submitted to the Owner. Individual test reports shall be consecutively numbered. Retest results shall reference the original failed test number.

1.5 FACTORY TESTS

A. When the specifications require inspection of materials or equipment during the production, manufacturing, or fabricating process, or before shipment, such services will be performed by an inspection organization acceptable to the Owner.

B. If an independent testing laboratory or inspection organization performs inspections and/or witnesses tests at the place of manufacture or fabrication, a written report on the inspection and/or three (3) copies of the inspection and/or test results shall be submitted to the Owner within seven (7) calendar days of the completion of the inspection or witness of tests.

1.6 FIELD TESTS AND STARTUP

A. Field tests shall be conducted prior to the Initial Operational Test.

PART 2 - PRODUCTS

Not Used

PART 3 - EXECUTION

Not Used

END SECTION

SECTION 01730 - OPERATION AND MAINTENANCE DATA

PART 1 – GENERAL

1.1 SCOPE OF WORK

A. This section includes procedural requirements for compiling and submitting operation and maintenance data required to complete the project, and is intended to supplement the requirements specified in Division 11, 15 and 16.

1.2 RELATED WORK

A. Submittals are included in Section 01300.

B. Contract closeout is covered in Section 01700.

C. Warranties and bonds are covered in Section 01740.

1.3 SERVICES OF MANUFACTURER'S REPRESENTATIVE

A. Equipment furnished under Division 15 (Mechanical) and Division 16 (Electrical Work) shall include the cost of a competent representative of the manufacturers of all equipment to supervise the installation, adjustment, and testing of the equipment and to instruct the Owner's operating personnel on operation and maintenance. This supervision may be divided into two or more time periods as required by the installation program or as directed by the Owner.

B. See the detailed specifications for additional requirements for furnishing the services of manufacturer's representatives.

C. A certificate in the form attached to this section, from the manufacturer and signed by Owner's Representative stating that the installation of the equipment is satisfactory, that the unit has been satisfactorily tested, is ready for operation, and that the operating personnel have been suitably instructed in the operation, lubrication, and care of the unit shall be submitted for each piece of equipment indicated above.

D. For equipment furnished under other Divisions, the Contractor shall furnish the services of accredited representatives of the manufacturer only when some evident malfunction or over-heating makes such services necessary in the opinion of the Owner.

1.4 OPERATING MANUALS

A. Three (3) copies of the manual shall be submitted at least three (3) months prior to operational testing of the equipment. Manual will be reviewed for compliance with specifications. If the Owner, upon reviewing the manual, determines that manual is acceptable, all three (3) copies will be retained. However, if the Owner

determines that the manual does not comply with the specifications, a marked-up copy of the manual will be returned to the Contractor for revisions and/or additions. Contractor shall revise manual accordingly and submit three (3) copies of the final manual to the Owner for acceptance prior to final application for payment. For equipment put into use with Owner's permission during construction, submit manual within 10 days after first operation. For items delayed materially beyond date of Substantial Completion, provide three copies of manual for review as soon as possible. Start of warranty period shall be date of acceptance of the item by the Owner.

1. The manual for each piece of equipment shall be a separate document with the following specific requirements:

   a. Contents:

      Table of contents and index

      Brief description of each system and components

      Starting and stopping procedures

      Special operating instructions

      Routine maintenance procedures

      Manufacturer's printed operating and maintenance instructions, parts list, illustrations, and diagrams

      One copy of each wiring diagram

      One copy of each approved shop drawing and each Contractor's coordination and layout drawing

      List of spare parts, manufacturer's price, and recommended quantity

      Name, address and telephone numbers of local service representatives

   b. Material

      Loose leaf on 60 pound, punched paper

      Holes reinforced with plastic cloth or metal

      Page size, 8-1/2-inch by 11-inch

      Diagrams, illustrations, and attached foldouts as required, of original quality, reproduced by dry copy method

      Covers: oil, moisture, and wear resistant 9 x 12 size

1.5 CONTENTS, EACH VOLUME

A. Table of Contents: Provide title of Project, names, addresses, and telephone numbers of Owner, sub-consultants, and Contractor with name of responsible parties; schedule of products and systems, indexed to content of the volume.

B. For Each Product or System: List names, addresses and telephone numbers of Subcontractors and suppliers; including local source of supplies and replacement parts.

C. Product Data: Mark each sheet to clearly identify specific products and component parts, and data applicable to installation. Delete inapplicable information.

D. Drawings: Supplement product data to illustrate relations of component parts of equipment and systems, to show control and flow diagrams. Do not use Project Record Documents as maintenance drawings.

E. Type Text: As required to supplement product data. Provide logical sequence of instructions for each procedure, incorporating manufacturer's instructions specified.

F. Warranties and Bonds are as specified in Section 01740.

1.6 MANUAL FOR MATERIALS AND FINISHES

A. Instructions for Care and Maintenance: Include manufacturer's recommendations for cleaning agents and methods, precautions against detrimental agents and methods, and recommended schedule for cleaning and maintenance.

B. Moisture Protection and Weather Exposed Products: Include product data listing, applicable reference standards, chemical composition, and details of installation. Provide recommendations for inspections, maintenance, and repair.

C. Additional Requirements: As specified in individual product specification sections.

D. Provide a listing in Table of Contents for design data, if provided by Contractor, with tabbed fly sheet and space for insertion of data.

1.7 MANUAL FOR EQUIPMENT AND SYSTEMS

A. For each Item of Equipment and Each System, provide the following:

1. Description of unit or system, and component parts. Identify function, normal operating characteristics, and limiting conditions. Include performance curves, with engineering data and tests, and complete nomenclature and commercial number of replaceable parts.

2. Panelboard Circuit Directories including electrical service characteristics, controls and communications, and color coded wiring diagrams as installed.

3. Operating Procedures: Include start-up, break-in, and routine normal operating instructions and sequences; regulation, control, stopping, shut-down, and emergency instructions; and any special operating instructions.

4. Maintenance Requirements:

   a. Routine procedures and guide for trouble-shooting; disassembly, repair, and reassembly instructions; and alignment, adjusting, balancing, and checking instructions.

   b. Servicing and lubrication schedule and list of lubricants required.

   c. Manufacturer's printed operation and maintenance instructions.

   d. Sequence of operation by controls' manufacturer.

   e. Original manufacturer's parts list, illustrations, assembly drawings, and diagrams required for maintenance.

5. Control diagrams by controls manufacturer as installed.

6. Contractor's coordination drawings, with color coded piping diagrams as installed.

7. Charts of valve tag numbers (if required), with location and function of each valve, keyed to flow and control diagrams.

8. List of original manufacturer's spare parts, current prices, and recommended quantities to be maintained in storage.

9. Test and balancing reports as specified.

10. Additional Requirements: As specified in individual product specification Sections.

B. Provide a listing in Table of Contents for design data, if provided by Contractor, with tabbed fly sheet and space for insertion of data.

PART 2 - PRODUCTS

Not Used

PART 3 - EXECUTION

Not Used

EQUIPMENT MANUFACTURER'S CERTIFICATE OF
INSTALLATION TESTING AND INSTRUCTION

Owner: _____
Project: _____
Contract No.: _____
Job No.: _____
EQUIPMENT SPECIFICATION SECTION _____
EQUIPMENT DESCRIPTION _____

I _____, Authorized representative of
(Print Name)

_____
(Print Manufacturer's Name)

hereby CERTIFY that _____
(Print equipment name and model with serial number)

installed for the subject project [has] [have] been installed in a satisfactory manner, [has] [have] been satisfactorily tested, [is] [are] ready for operation, and that Owner assigned operating personnel have been suitably instructed in the operation, lubrication, and care of the unit[s] on Date: _____ Time: _____.

CERTIFIED BY: _____ DATE: _____
(Signature of Manufacturer's Representative)

OWNER'S ACKNOWLEDGMENT OF MANUFACTURER'S INSTRUCTION

[I] [We] the undersigned, authorized representatives of the_____ and/or Plant Operating Personnel have received classroom and hands on instruction on the operation, lubrication, and maintenance of the subject equipment and [am] [are] prepared to assume normal operational responsibility for the equipment:

_____ DATE: _____

_____ DATE: _____

_____ DATE: _____

_____ DATE: _____

END SECTION

SECTION 01740 - WARRANTIES AND BONDS

PART 1 – GENERAL

1.1 SCOPE OF WORK

A. This section includes general administrative and procedural requirements for warranties and bonds required by the Contract Documents, including manufacturer's standard warranties on products and special warranties.

1.2 RELATED WORK

A. Refer to the General Conditions for the general requirements relating to warranties and bonds.

B. General closeout requirements are included in Section 01700, CONTRACT CLOSEOUT.

1.3 SUBMITTALS

A. Submit written warranties to the Owner prior to the date fixed by the Owner for Substantial Completion.

B. When a special warranty is required to be executed by the Contractor, or the Contractor and a subcontractor, supplier or manufacturer, prepare a written document that contains appropriate terms and identification, ready for execution by the required parties. Submit a draft to the Owner for approval prior to final execution.

C. At Final Completion compile two copies of each required warranty and bond properly executed by the Contractor, or by the Contractor, subcontractor, supplier, and manufacturer. Organize the warranty documents into an orderly sequence, with a Table of Contents neatly typed, with each item identified with the number and title of the specification section in which specified, and the name of the product or work item.

D. Bind warranties and bonds in heavy-duty, commercial quality, durable 3-ring vinyl covered loose-leaf binders, thickness as necessary to accommodate contents, and sized to receive 8-1/2-inch by 11-inch paper.

E. Table of Contents:

F. Provide heavy paper dividers with celluloid covered tabs for each separate warranty. Mark the tab to identify the product or installation. Provide a typed description of the product or installation, including the name of the product, and the name, address and telephone number of the installer, supplier and manufacturer.

G. Identify each binder on the front and the spine with the typed or printed title "WARRANTIES AND BONDS," the project title or name, and the name, address and telephone number of the [Contractor] [equipment supplier] [responsible principal].

H. When operating and maintenance manuals are required for warranted construction, provide additional copies of each required warranty, as necessary, for inclusion in each required manual.

1.4 WARRANTY REQUIREMENT

A. Related Damages and Losses: When correcting warranted work that has failed, remove and replace other work that has been damaged as a result of such failure or that must be removed and replaced to provide access for correction of warranted work.

B. Reinstatement of Warranty: When work covered by a warranty has failed and been corrected by replacement or rebuilding, reinstate the warranty by written endorsement. The reinstated warranty shall be equal to the original warranty with an equitable adjustment for depreciation.

C. Replacement Cost: Upon determination that work covered by a warranty has failed, replace or rebuild the work to an acceptable condition complying with requirements of Contract Documents. The Contractor is responsible for the cost of replacing or rebuilding defective work regardless of whether the Owner has benefited from use of the work through a portion of its anticipated useful service life.

D. Owner's Recourse: Written warranties made to the Owner are in addition to implied warranties, and shall not limit the duties, obligations, rights and remedies otherwise available under the law, nor shall warranty periods be interpreted as limitations on time in which the Owner can enforce such other duties, obligations, rights, or remedies.

E. Rejection of Warranties: The Owner reserves the right to reject warranties and to limit selections to products with warranties not in conflict with requirements of the Contract Documents.

F. Disclaimers and Limitations: Manufacturer's disclaimers and limitations on product warranties do not relieve the Contractor of the warranty on the work that incorporates the products, nor does it relieve suppliers, manufacturers, and subcontractors required to countersign special warranties with the Contractor.

1.5 DEFINITIONS

A. Standard Product Warranties are pre-printed written warranties published by individual manufacturers for particular products and are specifically endorsed by the manufacturer to the Owner.

B. Special Warranties are written warranties required by or incorporated in the Contract Documents, either to extend time limits provided by standard warranties or to provide greater rights for the Owner.

1.6 EFFECTIVE DATE

A. The effective date of the Owner's warranty shall be when the facility is fully transferred to the Owner as described in Section 01720 and the Contract Documents.

PART 2 - PRODUCTS

Not Used

PART 3 - EXECUTION

Not Used

END SECTION

SECTION 02100 – SITE PREPARATION

PART 1 – GENERAL

1.1 SUMMARY

A. General Requirements: Furnish all labor, material, equipment, services necessary to prepare the site as indicated on the drawings and specified herein.

1.2 RELATED DOCUMENTS

A. Drawings and general provisions of the Contract, including General and Supplementary Conditions and Division 1 Specification Sections, apply to this section.

1.3 SCOPE

A. Cleaning site of debris, grass, trees and other plant life in preparation for site or building excavation work.

B. Protection of existing structures, trees or vegetation indicated on the contract documents to remain.

C. Stripping topsoil from areas that are to be incorporated into the limits of the project and where so indicated on the Construction Drawings.

1.4 RELATED WORK

A. Section 02200 – Earthwork

B. Section 02270 – Slope Protection and Erosion Control

C. Construction Drawings

D. Geotechnical Engineering Exploration, *DHHL Pulehunui Wastewater System,* Geolabs, Inc. dated November 25, 2019, and any subsequent addenda thereafter.

E. Hawaii Standard Specifications for Road, Bridge, and Public Works Construction, State of Hawaii, Department of Transportation, Highways Divison, 2005 and as amended (Paragraphs on Measurement and Payment do not apply to this project.)

1.5 ENVIRONMENTAL REQUIREMENTS

A. Construct temporary erosion control systems as shown on the plans or as directed by the Owner's Representative to protect adjacent properties and water resources from erosion and sedimentation.

B. The Contractor shall be solely responsible for conducting the storm water management practices in accordance with the NPDES permit and for any enforcement action taken or imposed by Federal or State agencies, including the

cost of fines, construction delays and remedial actions resulting from the Contractor's failure to comply with all provisions of the NPDES permit.

C. If a NPDES permit is required for this project, the Contractor shall maintain a Storm Water Pollution Prevention Plan (SWPPP) which includes a "Site Specific Best Management Practices Plan" in accordance with NPDES permit and State of Hawaii, Department of Health, Clean Water Branch requirements.

1.6 JOB CONDITIONS

A. Conditions existing at time of inspection for bidding purposes will be maintained by the Owner in so far as practical.

B. Variations to conditions or discrepancy in actual conditions as they apply to site preparation operations are to be brought to the attention of the Owner or Owner's Representative prior to the commencement of any site work.

PART 2 – PRODUCTS

2.1 NOT APPLICABLE

PART 3 – EXECUTION

3.1 PREPARATION

A. Verify that existing plant life and clearing limits are clearly tagged, identified and marked in such a manner as to ensure their safety throughout construction operations.

3.2 PROTECTION

A. Locate and identify existing utilities that are to remain and protect them from damage.

B. Protect tress, plant growth and features designed to remain as final landscape.

C. Conduct operations with minimum interference to public or private accesses and facilities. Maintain access and egress at all times and clean or sweep any roadways daily or as required by the governing authority. At such times as deemed necessary by the Owner or Owner's Representative, dust control shall be provided with sprinkling systems or equipment provided by the Contractor.

D. Protect bench marks, property corners and all other survey monuments from damage or displacement. If a marker needs to be removed it shall be referenced by a licensed land surveyor and replaced, as necessary, by the same.

E. Provide traffic control as required, in accordance with the U.S. Department of transportation "Manual of Uniform Traffic Control Devices" and the State Highway Department and/or County of Maui, Department of Public Works requirements.

3.3 CLEARING

A. Clear areas required for access to site and execution of work.

B. Remove grass, trees, plant life, stumps and all other construction debris from the site to a dump site that is suitable for handling such material according to state laws and regulations. Contractor is responsible for all associated permits.

3.4 TOPSOIL EXCAVATION

A. Strip topsoil from areas that are to be filled, excavated, landscaped, or re-graded to such a depth that it prevents intermingling with underlying subsoil or questionable material. Prior to fill placement, the current grade should first be scarified to a minimum depth of 8", moistened to at least 2 percent above optimum moisture content, and compacted to a minimum 90 percent compaction as determined by ASTM D 1557. Soft and loose soils should be removed down to competent material and replaced with either approved onsite soil or imported fill compacted in lifts to the recommended minimum standard as indicated in the soils report.

3.5 ARCHAEOLOGICAL MONITORING

A. In order to address the possibility that historic sites may be encountered during construction, the Contractor shall retain an Archaeological Monitor from State Historic Preservation Division (SHPD) approved list who shall be present during all ground disturbing activities. The Archaeological Monitor's services shall include implementing all incidental procedures and providing all equipment necessary for compliance with the requirements of the archaeological monitoring plan.

B. The Archaeological Monitor shall establish the limits of any significant historical site encountered, and shall determine with the Owner the best means for protecting the site from further disturbance, as well as the best means for implementing further investigation or salvage as required by SHPD. Protection measures may include barricades, roping off, temporary fencing or other means.

C. The Archaeological Monitor shall also submit a report documenting the findings of the monitoring activities to SHPD for review within 180 calendar days of the completion of the project.

D. Archaeological, Historical or Burial Site Findings. The Contractor shall be responsible for complying with the requirments of this section as well as the requirements for protection of archaeological, historical and burial sites per SHPD requirements and as specified elsewhere in the plans and specifications.

E. Whenever the Contractor encounters possible archaeological, historical or burial site findings, the Contractor shall immediately suspend the operation and inform the Owner or Owner's Representative verbally and in writing. The Owner or Owner's Representative will contact the SHPD and other agencies to evaluate such findings and determine the appropriate course of action.

F. The Contractor shall not resume operations without the prior written approval of the Owner. The Contractor shall not count delays resulting from the discovery, investigation and handling of such findings against the completion date. Also, the Contractor shall conform to the requirements of Chapter 6E, Hawaii Revised Statues (HRS).

G. Failure or refusal to comply with the terms of this Section or Chapter 6E, Hawaii Revised Statures, may subject the Contractor to the penalties described in Section 6E-11, Hawaii Revised Statutes.

END SECTION

SECTION 02200 – EARTHWORK

PART 1 – GENERAL

1.1 SUMMARY

A. General Requirements: Furnish all labor, material, equipment, services necessary to complete earthwork operations as indicated on the drawings and specified herein.

1.2 RELATED DOCUMENTS

A. Drawings and general provisions of the Contract, including General and Supplementary Conditions and Division 1 Specification Sections, apply to this section.

1.3 SCOPE

A. Excavation and embankment for structures.

B. Excavation, backfill and bedding for new underground utilities.

C. Excavation and embankment for roadway and sidewalk construction.

D. Scarifying, compaction, moisture conditioning, drying, and removal of unsuitable material to ensure proper preparation of areas for fills or proposed improvements.

E. Cutting, filling and grading to required lines, dimensions, contours and proposed elevations for proposed improvements.

F. Surface preparation of areas to receive paving.

G. Construction of swales where indicated.

1.4 RELATED WORK

A. Section 02100 Site Preparation

B. Section 02221 Excavation, Backfilling, and Compacting for Structures

C. Section 02222 Excavation, Backfilling, and Compacting for Utilities

D. Section 02223 Excavation, Backfill and Compacting for Pavement

E. Section 02227 Aggregate Materials

F. Construction Drawings

G. Hawaii Standard Specifications for Road, Bridge, and Public Works Construction, State of Hawaii, Department of Transportation, Highways Divison, 2005 and as amended (Paragraphs on Measurement and Payment do not apply to this project.)

H. Geotechnical Engineering Exploration, *DHHL Pulehunui Wastewater System,* Geolabs, Inc. dated November 25, 2019, and any subsequent addenda thereafter.

1.5 REFERENCE STANDARDS

A. American Society for Testing and Materials (ASTM) latest edition.

i. D422 Method for Particle Size Analysis of Soils

ii. D1556 Test for Density of soil in Place by the Sand Cone Method

iii. D1557 Test for Moisture – Density Relations of Soils Using 10-lb (4.5 Kg) Rammer and 18-inch (457 mm) Drop (Modified Proctor)

iv. D2167 Test Density of Soil in Place by the Rubber Balloon Method

v. D2216 Laboratory Determination of Moisture content of Soil

vi. D2487 Classification of Soils for Engineering Purposes

vii. D2922 Test for Density of Soil and Soil-Aggregate in Place by Nuclear Methods (Shallow Depth)

viii. D3017 Test for Moisture Content of Soil and Soil-Aggregate in Place by Nuclear Methods (Shallow Depth)

ix. D4318 Test for Plastic Limit, Liquid Limit, and Plasticity Index of Soils

B. American Association of State Highway and Transportation Officials (AASHTO) latest edition

i. T 88 Mechanical Analysis of Soils

1.6 QUALITY ASSURANCE

A. An Independent Testing Laboratory selected and paid for by the Contractor, subject to the Owner review and approval, shall be retained to perform construction testing on site based on the following:

i. Structures: for structures' subgrade areas including 10'-0" outside structure lines:

a. In cut areas, not less than one compaction test for every 2,500 square feet.

b. In fill areas, same rate of testing for each 8-inch lift (measured loose).

ii. Subgrade Areas: Compaction tests for each lift will be performed as follows:

a. Subgrade – 1 test per 5,400 square feet or fraction thereof

b. Fill – 1 test per 5,400 square feet or fraction thereof

c. Trench Backfill – 1 test per 300 linear feet of trench or fraction thereof

iii. Areas of Construction exclusive of road subgrade: In cut areas, not less than one compaction test for every 10,000 square feet or fraction thereof. In fill areas, same rate of testing for each 8 inch lift (measured loose). Test results shall be submitted to the Owner's Representative as soon as they are available, to allow the Owner's Representative adequate time to review the results before the Contractor proceeds with the next lift.

B. If compaction requirements are not compiled with at any time during construction process, remove and recompact deficient areas until proper compaction is obtained at no additional expense to the Owner.

C. In all areas to receive pavement, a CBR test shall be performed for each type of material imported for off-site for use as subgrade material.

D. The following tests shall be performed on each type of on-site or imported soil material used as compacted fill as part of construction testing requirements:

1. Moisture and Density Relationship: ASTM D 1557

2. Mechanical Analysis: AASHTO T-88

3. Plasticity Index: ASTM D 4318

E. Field density tests for in-place materials shall be performed according to one of the following standards as part of construction testing requirements.

1. Sand-Cone Method: ASTM D 1556

2. Balloon Method: ASTM D 2167

3. Nuclear Method: ASTM D 2922 (Method B-Direct Transmission)

F. An Independent Testing Laboratory shall prepare test reports that indicate test locations, elevation data, and test results. The Owner or Owner's Representative shall be provided with copies of reports within 96 hours of time test was performed. In the event that any test performed fails to meet these Specifications, the Owner or Owner's Representative shall be notified promptly by the Independent Testing Laboratory.

G. All costs related to retesting due to failures shall be paid for by the Contractor at no additional expense to Owner. The Owner or Owner's Representative reserves the right to employ an Independent Testing Laboratory and to direct any testing that is deemed necessary. Contractor shall provide free access to site for testing activities.

1.7 SUBMITTALS

A. Submit a sample of each type of offsite fill materials that is to be used at the site in an airtight, 10lb. container for the testing laboratory 7 days prior to its intended use.

B. Submit the name of each material supplier and specific type and source of each material. Any change in source throughout the job requires approval of the Owner or Owner's Representative.

C. For use of fabrics or geogrids, a design shall be submitted for approval by the Owner or Owner's Representative.

D. Submit compaction test results.

PART 2 – PRODUCTS

2.1 MATERIALS

A. The natural materials resulting from excavation of the site may be reused in compacted fills provided they are in strict accordance with the geotechnical recommendations for the project. The maximum particle size shall be less than 3 inches in largest dimension. The moisture content of the natural materials used should be maintained at slightly above the optimum moisture content during recompaction or as recommended in the soils report.

B. Aggregate fill as specified in Section 02227.

C. Fill materials, whether generated on-site or imported, and top soil fill should follow the recommendations of the project soils report. Imported materials should consist of non-expansive select granular material, such as crushed coral or basalt and be well-graded from coarse to fine with particles no larger than 3 inches in largest dimension.

D. Where groundwater is encountered (within the excavations), backfill materials should consist of free-draining granular materials, such as No. 3B Fine gravel (ASTM C33, No. 67 gradation), wrapped on all sides with non-woven filter fabric. The free-draining granular materials should be used up to a level of about 12 inches above the groundwater level.

PART 3 – EXECUTION

3.1 USE OF STANDARDS

A. Identify required lines, levels, contours, and datum.

B. Locate and identify existing utilities that are to remain and protect them from damage.

C. Protect plant life, fences, existing utilities structures and paving from excavating equipment and vehicular access.

D. Protect benchmarks, property corners and all other survey monuments from damage or displacement. If a marker needs to be removed is shall be referenced by the licensed land surveyor and replaced, as necessary, by the same.

E. Remove site material encountered in grading operations that, in opinion of Owner or Owner's Representative is unsuitable or undesirable for backfilling, subgrade or foundation purposes. Dispose of in legal manner. Backfill areas with layers of suitable material and compact as specified.

F. Should historic remains such as artifacts, burials, concentrations of shell or charcoal be encountered during construction activities, work shall cease immediately in the immediate vicinity of the find. The Contractor shall immediately contact the Owner's Representative, who shall notify the necessary parties, which will assess the significance of the find and recommend the appropriate mitigation measures, if necessary.

3.2 EXCAVATION FOR FILLING AND GRADING

A. Classification of Excavation: Contractor shall acknowledge that he has investigated the site to determine type, quantity, quality, and character of excavation work to be performed. Excavation shall be considered unclassified excavation.

B. Perform excavation using capable, well maintained equipment and methods acceptable to the Owner or Owner's Representative and governing agencies.

C. When performing grading operations during periods of wet weather, provide adequate drainage and ground water management to control moisture of soils.

D. Shore, brace, and drain excavations as necessary to maintain safe, secure, and free of water at all times.

3.3 FILLING AND SUBGRADE PREPARATION

A. Fill areas to contours and elevations shown with on-site excavated material or suitable borrow.

B. All areas to receive fill should be scarified to a minimum depth of 8 inches, moisture-conditioned to at least 2 percent above the optimum moisture content, and compacted to a minimum 90 percent of the maximum density, as determined by ASTM D1557, prior to any fill replacement. Where the existing ground is within 3 feet of a pavement subgrade, it should be compacted to at least 95 percent relative compaction. Any soft, loose, or disturbed soil encountered at this time should be removed and replaced with compacted soils.

C. Fill and backfill should be placed in level lifts of no more than 8 inches in loose thickness, moisture-conditioned to above its optimum moisture content, and

uniformly compacted to at least 90 percent relative compaction as determined by ASTM D1557. Granular soils, such as imported granular structural fill and natural sand materials, should be compacted to at least 90 percent compaction. Fill placed within 3 feet of the finished road subgrade should be compacted to at least 95 percent relative compaction.

D. Fill placed in areas with slopes steeper than 5H:1V should be continually benched as the fill is brought up in lifts. Fill slopes should be constructed by overfilling and cutting back to the design slope gradient to obtain a well-compacted slope face. The benches should extend through any loose slope materials and into hard or dense materials.

E. Cut slopes should be sloped at no steeper than 2H:1V for vertical heights of up to 15 feet without benches. Fill slopes should be compacted no steeper than 2H:1V for vertical heights of up to 15 feet with benches. Slopes exceeding 15 feet in height should include benches at least 8 feet in width. All slopes should be planted as soon as practical upon completion of grading to reduce the effects of erosion and weathering.

3.4 MAINTENANCE OF SUBGRADE

A. Finished subgrades shall be verified to ensure proper elevation and conditions for construction above subgrade.

B. Protect subgrade from excessive wheel loading during construction, including concrete trucks, and dump trucks.

C. Remove areas for finished subgrade found to have insufficient compaction density to depth necessary and replace in a manner that will comply with compaction requirements by use of material equal to or better than best subgrade material on site. Surface of subgrade after compaction shall be hard, uniform, smooth, stable, and true to grade and cross-section.

3.5 FINISH GRADING

A. Grade all areas where finish grade elevations or contours are indicated on Drawings, other than paved areas, including excavated areas, filled and transition areas, and landscaped areas. Graded areas shall be uniform and smooth, free from rock, debris, or irregular surface changes. Finished subgrade elevation, and all ground surfaces, shall vary uniformly between indicated elevations. For erosion control matting of swales and ditches, refer to Section 02270 Slope Protection and Erosion Control.

B. Correct all settlement and eroded areas due to any defects in material or workmanship within one year after date of completion at no additional expense to the Owner. Bring grades to proper elevation. Replant or replace any grass, shrubs, or bushes, or other vegetation that appears dead, dying, or disturbed by the Contractor's construction activities and/or due to materials or workmanship that are defective, inferiors, or not in accordance with the drawings and specification. Adjust

or replace geotextile and matting material disturbed by the Contractor's construction activities. Refer to Section 02270 Slope Protection and Erosion Control.

END SECTION

SECTION 02221 – EXCAVATION, BACKFILLING, AND COMPACTING FOR STRUCTURES

PART 1 – GENERAL

1.1 SUMMARY

A. General Requirements: Furnish all labor, material, equipment, services necessary to excavate, backfill, and compact for structures as indicated on the drawings and specified herein.

1.2 RELATED DOCUMENTS

A. Drawings and general provisions of the Contract, including General and Supplementary Conditions and Division 1 Specification Sections, apply to this section.

1.3 SECTION INCLUDES

A. Excavate to line, grade and configuration as shown in the plans and specifications for proposed structures and expansion areas.

B. Fill to line, grade and configuration as shown in the plans and specifications for proposed structures and expansion areas.

C. Compacting for materials in an acceptable manner as stated herein.

1.4 RELATED WORK

A. Section 02200 Earthwork

B. Section 02227 Aggregate Materials

C. Construction Drawings

D. Hawaii Standard Specifications for Road, Bridge, and Public Works Construction, State of Hawaii, Department of Transportation, Highways Divison, 2005 and as amended (Paragraphs on Measurement and Payment do not apply to this project.)

E. Geotechnical Engineering Exploration, *DHHL Pulehunui Wastewater System,* Geolabs, Inc. dated November 25, 2019, and any subsequent addenda thereafter.

1.5 REFERENCE STANDARDS

A. American Society for Testing and Materials (ASTM) latest edition.

i. D422 Method for Particle Size Analysis of Soils

ii. D1556 Test for Density of soil in Place by the Sand Cone Method

iii. D1557 Test for Moisture – Density Relations of Soils Using 10-lb (4.5 Kg) Rammer and 18-inch (457 mm) Drop (Modified Proctor)

iv. D2167 Test Density of Soil in Place by the Rubber Balloon Method

v. D2216 Laboratory Determination of Moisture content of Soil

vi. D2487 Classification of Soils for Engineering Purposes

vii. D2922 Test for Density of Soil and Soil-Aggregate in Place by Nuclear Methods (Shallow Depth)

viii. D3017 Test for Moisture Content of Soil and Soil-Aggregate in Place by Nuclear Methods (Shallow Depth)

ix. D4318 Test for Plastic Limit, Liquid Limit, and Plasticity Index of Soils

B. American Association of State Highway and Transportation Officials (AASHTO) latest edition.

i. T 88 Mechanical Analysis of Soils

1.6 QUALITY ASSURANCE

A. Independent testing laboratory hired and paid for by the Contractor shall perform construction testing on filling operations and subgrade analysis as specified in Section 02200 and as stated herein.

1.7 SUBMITTALS

A. Shop drawings or details pertaining to excavating and filling for structures are not required unless otherwise shown on the drawings or specifications or if contrary procedures to the project documents are proposed.

B. Submit a sample of each type of off-site fill material that is to be used in backfilling in an air-tight, 10 lb. container for the testing laboratory or submit a gradation and certification of the aggregate material that is to be used to the testing laboratory for review.

C. Submit compaction test results.

PART 2 – PRODUCTS

2.1 MATERIALS

A. Fill material from on-site as specified in Section 02200 and approved by the Owner or Owner's representative.

B. Fill material from off-site as specified in Section 02200 and approved by the Owner or Owner's representative.

C. Aggregate material as specified in Section 02227.

PART 3 – EXECUTION

3.1 PREPARATION

A. Identify all lines, elevations and grades necessary to construct building subgrades as shown in the plans and specifications.

B. Carefully protect bench marks, property corners, monuments or other reference points.

C. Locate and identify all site utilities that have previously been installed and may be in danger of damage by grading operations.

D. Locate and identify all existing utilities that are to remain and protect them from damage.

E. Over excavate and properly prepare areas of subgrade that are not capable of supporting the proposed systems. These areas shall be stabilized by using acceptable fill materials placed and compacted as specified.

3.2 EXCAVATION

A. Excavate building areas to line and grade as shown in the plans and specifications being careful not to over excavate beyond the elevations needed for building subgrades.

B. Engage all suitable material into the project fill areas as specified in Section 02200.

C. Unsuitable excavated material is to be disposed of in a manner and location that is acceptable to the Owner or Owner's Representative and local governing agencies.

D. Perform excavation using capable, well maintained equipment and methods acceptable to the Owner or Owner's Representative and the project document requirements.

3.3 FILLING AND SUBGRADE PREPARATION

A. Building area subgrade pad shall be that portion of site directly beneath and ten feet (10') beyond the building and appurtenances including the limits of any future building expansion areas as shown on the civil site drawings.

B. Areas exposed by excavation or stripping and on which building subgrade preparations are to performed shall be scarified to a minimum depth of eight (8) inches and compacted in accordance with the soils report. These areas shall then be proofrolled to detect any areas of insufficient compaction. Proofrolling shall be accomplished by making a minimum of two (2) complete passes with a fully-loaded tandem-axle dump truck, or approved equivalent, in each of the two perpendicular

directions under the supervision and direction of a field geotechnical engineer. Areas of failure shall be excavated and recompacted as stated above. In at-grade or cut areas, the upper eight (8) inches of soil should be overexcavated, moisture-conditioned, and backfilled in accordance with these recommendations.

C. Fill materials used in preparation of building subgrade shall be placed in level lifts not to exceed 8" loose measure and compacted in accordance with the recommendations in the soils report. The maximum allowable values for plasticity index (PI) and liquid limit (LL) of suitable materials shall be in accordance with the soils report.

3.4 COMPACTION

A. Maintain optimum moisture content of fill materials to attain required compaction density.

B. All materials shall be tested in accordance with Section 02200.

C. An independent testing laboratory hired and paid for by the Contractor shall perform testing on site.

D. Compaction tests will be as specified in Section 02200 together with the following for building subgrade areas including 10'-0" outside exterior building lines: In cut areas, not less than one compaction test for every 2,500 square feet. In fill areas, same rate of testing for each 8" lift (measured loose).

E. If compaction requirements are not complied with at any time during construction process, remove and recompact deficient areas until proper compaction is obtained at no additional expense to the Owner.

3.5 MAINTENANCE OF SUBGRADE

A. Finished subgrades shall be established and verified to ensure proper elevation and conditions for construction above subgrade.

B. Protect subgrade from excessive wheel loading during construction, including concrete trucks and dump trucks.

C. Remove areas of finished subgrade found to have insufficient compaction density of depth necessary and replace in a manner that will comply with compaction requirements by use of materials equal to or better than best subgrade material on site. Surface of subgrade after compaction shall be hard, uniform, smooth, stable, and true to grade and cross-section.

3.6 FINISH GRADING

A. Finish grading shall be in accordance with Section 02200 and as more specifically stated herein.

B. Grading of building areas including proposed building pad areas, shall be checked by string line from grade stakes (blue tops) set at not more than 50' centers. Tolerance of 0.10 feet, more or less, may be permitted. Contractor to provide engineering and field staking necessary for verification of lines, grades, moisture content, compaction density, and elevations.

3.7 TRANSFER BUILDING PAD AREAS TO THE BUILDING CONTRACTOR

A. The transfer of building pad areas to the Building Contractor shall be in accordance to the schedule determined by the Owner or Owner's Representative.

B. The Contractor shall coordinate and provide the Building Contractor the opportunity to inspect the completed building pad areas and provide the Building Contractor with sufficient information to verify that the building pad areas have been constructed to required lines, grades and elevations. Any errors and/or discrepancies shall be corrected by the Contractor before transfer and acceptance of the building areas by the Building Contractor.

C. Prior to the transfer of the building pad areas to the Building Contractor, the Contractor shall insure that the building pad areas being transferred contain required compaction density and moisture content.

END SECTION

SECTION 02222 – EXCAVATION, BACKFILLING, AND COMPACTING FOR UTILITIES

PART 1 – GENERAL

1.1 SUMMARY

A. General Requirements: Furnish all labor, material, equipment, services necessary to excavate, backfill, and compact for utilities as indicated on the drawings and specified herein.

1.2 RELATED DOCUMENTS

A. Drawings and general provisions of the Contract, including General and Supplementary Conditions and Division 1 Specification Sections, apply to this section.

1.3 SECTION INCLUDES

A. Excavation, backfilling and compaction for utilities.

B. Excavating trenches for the installation of utilities.

C. Backfilling trench with bedding material as specified and indicated and finishing filling trench with suitable material to proposed subgrade.

D. Compacting backfill materials in an acceptable manner.

E. Excavation, backfilling and compaction for the water system located shall conform to the requirements of the "Water System Standards", Department of Water Supply, County of Maui, State of Hawaii, 2002.

1.4 RELATED WORK

A. Section 02200 Earthwork

B. Section 02227 Aggregate Materials

C. Construction Drawings

D. Water System Standards, Department of Water, County of Maui, State of Hawaii dated 2002 and as amended.

E. Hawaii Standard Specifications for Road, Bridge, and Public Works Construction, State of Hawaii, Department of Transportation, Highways Divison, 2005 and as amended (Paragraphs on Measurement and Payment do not apply to this project.)

F. Geotechnical Engineering Exploration, *DHHL Pulehunui Wastewater System,* Geolabs, Inc. dated November 25, 2019, and any subsequent addenda thereafter.

1.5 REFERENCE STANDARDS

A. American Society for Testing and Materials (ASTM) latest edition.

i. D422 Method for Particle Size Analysis of Soils

ii. D1556 Test for Density of soil in Place by the Sand Cone Method

iii. D1557 Test for Moisture – Density Relations of Soils Using 10-lb (4.5 Kg) Rammer and 18-inch (457 mm) Drop (Modified Proctor)

iv. D2167 Test Density of Soil in Place by the Rubber Balloon Method

v. D2216 Laboratory Determination of Moisture content of Soil

vi. D2487 Classification of Soils for Engineering Purposes

vii. D2922 Test for Density of Soil and Soil-Aggregate in Place by Nuclear Methods (Shallow Depth)

viii. D3017 Test for Moisture Content of Soil and Soil-Aggregate in Place by Nuclear Methods (Shallow Depth)

ix. D4318 Test for Plastic Limit, Liquid Limit, and Plasticity Index of Soils

B. American Association of State Highway and Transportation Officials (AASHTO) latest edition.

i. T 88 Mechanical Analysis of Soils

1.6 QUALITY ASSURANCE

A. Independent testing laboratory hired by the Contractor shall perform construction testing on filling operations and subgrade analysis as specified in Section 02200 and as stated herein.

1.7 SUBMITTALS

A. Shop Drawings or details pertaining to Site Utilities are not required unless required by regulatory authorities or specified elsewhere, or unless use of materials, methods, equipment, or procedures are contrary to Drawings or these specifications are proposed. Do not perform work until required shop drawings have been accepted by Owner or Owner's Representative.

B. The Contractor shall contact all utility companies and determine if additional easements will be required to complete the project. Contractor shall provide written confirmation of the status of all easements to the Owner or Owner's Representative at the time of the preconstruction conference or no later than 90 days prior to the project possession date.

C. Submit a sample of each type of off-site fill material that is to be used in backfilling in an air-tight, 10 lb. container for the testing laboratory or submit a gradation and certification of the aggregate material that is to be used to the testing laboratory for review.

D. Submit compaction test results.

1.8 PROJECT AS-BUILT DOCUMENTS

A. Accurately record actual locations of all subsurface utilities, structures and obstructions encountered. The Contractor shall provide one “redline” set of as-built drawings to the Owner or Owner’s Representative. Each sheet shall be stamped, signed, and dated certifying that all dimensions, details, etc. are reflective of items constructed in the field.

PART 2 – PRODUCTS

2.1 MATERIALS

A. Bedding Material: Processed sand and gravel free from clay lumps, organic, or other deleterious material, and complying with the following gradation requirements. Sand material stockpiled during grading operations is suitable provided any cobble- and boulder-size cemented sand pieces are crushed and processed to meet the material requirements specified in Section 02200.

ASTM Designation No.67

U. S. Sieve Size	Percent Passing (by weight)
1 inch	100
3/4 Inch	90-100
3/8 Inch	20-55
No. 4	0-10
No. 8	0-5

B. Backfill material from site as specified in Section 02200 and approved by the Owner or Owner’s Representative.

C. Backfill material from off-site as specified in Section 02200 and approved by the Owner or Owner’s Representative.

PART 3 – EXECUTION

3.1 PREPARATION

A. Set all lines, elevations, and grades for utility and drainage system work and control system for duration of work, including careful maintenance of bench marks, property corners, monuments, or other reference points.

B. Maintain in operating condition all existing utilities, active utilities and drainage systems encountered in utility installation. Repair any surface or subsurface improvements shown on Drawings.

C. Verify location, size, elevation, and other pertinent data required to make connections to existing utilities and drainage systems as indicated on Drawings. Contractor shall comply with local codes and regulations.

D. Over excavate and properly prepare areas of subgrade that are not capable of supporting the proposed systems. These areas shall be stabilized by using acceptable filter fabrics and/or additional bedding material placed and compacted as specified.

3.2 EXCAVATION

A. The local utility companies shall be contacted before excavation shall begin. Dig trench at proper width and depth for laying pipe, conduit, or cable. Cut trench banks vertical if possible and remove stones from bottom of trench as necessary to avoid point bearing. Over excavate wet or unstable soil, if encountered, from trench bottom as necessary to provide suitable base for continuous and uniform bedding. The over-excavation and cushion thickness for the pipes should be in accordance with pertinent section of the Standard Specifications for each type of utility but should not be less than 6 inches.

B. All trench excavation side walls greater than 5 feet in depth shall be sloped, shored, sheeted, braced or otherwise supported by means of sufficient strength to protect the workmen within them in accordance with the applicable rules and regulations established for construction by the Department of Labor, Occupational Safety and Health Administration (OSHA), and by local ordinances.

C. Perform excavation as indicated for specified depths. During excavation, stockpile materials suitable for backfilling in orderly manner far enough from bank of trench to avoid overloading, slides, or cave-ins.

D. Remove excavated materials not required or not suitable for backfill or embankments and waste as specified. Any structures discovered during excavation(s) shall be disposed of as specified.

E. Prevent surface water from flowing into trenches or other excavations by temporary grading or other methods, as required. Remove accumulated water in trenches or other excavations by pumping or other acceptable methods.

F. Open cut excavation with trenching machine or backhoe. Where machines other than ladder or wheel-type trenching machines are used, do not use clods for backfill. Dispose of unsuitable material and provide other suitable material at no additional cost to the Owner.

G. Accurately grade trench bottom to provide uniform bearing and support for each section of pipe on bedding material at every point along entire length, except where necessary to excavate for bell holes, proper sealing of pipe joints, or other required

connections. Dig bell holes and depressions for joints after trench bottom has been graded. Dig no deeper, longer, or wider than needed to make joint connection properly.

H. Trench width requirements below the top of the pipe shall not be less than 12" nor more than 18" wider than outside surface of any pipe or conduit that is to be installed to designated elevations and grades. All other trench width requirements for pipe, conduit, or cable shall be the least practical width that will allow for proper compaction of trench backfill.

I. Trench depth requirements measured from finished grade or paved surface shall meet applicable codes and ordinances.

J. Provide sheeting and bracing, when necessary, in trenches and other excavations where protection of workmen required. Sheeting must be removed after sufficient backfilling.

3.3 PIPE BEDDING

A. Accurately cut trenches for pipe or conduit that is installed to designated elevations 6" below bottom of pipe and to width as specified. Place 6" of No. 3B Fine gravel bedding material, compact in bottom of trench, and accurately shape to conform to lower portion of pipe barrel. After pipe installation, place backfill as specified and compact in maximum 8" layers measured loose to the top of the trench.

B. Utilities which are founded on the cemented sands should be bedded on at least 6” of bed course or pipe cushion material to minimize the potential for point loads on the pipes from high points in the cemented sands.

3.4 BACKFILLING

A. Criteria: Trenches shall not be backfilled until required tests are performed and the utility systems comply with and are accepted by applicable governing authorities. Backfill trenches as specified. If improperly backfilled, reopen to depth required to obtain proper compaction. Backfill and compact, as specified, to properly correct condition in an acceptable manner.

B. Backfilling: After pipe or conduit has been installed, bedded, and tested as specified, backfill trench or structure excavation with specified material placed in 8" maximum loose lifts.

C. Systematically backfill to allow maximum time for natural settlement. Do not backfill over porous, wet or spongy subgrade surfaces.

3.5 COMPACTION

A. Exercise proper caution when compacting immediately over top of pipes or conduits. Water jetting or flooding is not permitted as a method of compaction.

B. Maintain optimum moisture content of fill materials to attain required compaction density.

C. An Independent Testing Laboratory hired by the Contractor shall perform testing at intervals not exceeding 200' of trench for the first and every other eight-inch (8") lift of compacted trench backfill and furnish copies of test results as specified. Compact to minimum density of 95% relative compaction in paved areas and 90% relative compaction in non-paved areas, in accordance with ASTM D 1557.

D. All materials used for backfill shall comply with the requirements of Section 02200.

END SECTION

SECTION 02223 – EXCAVATION, BACKFILLING, AND COMPACTING FOR PAVEMENT

PART 1 – GENERAL

1.1 SUMMARY

A. General Requirements: Furnish all labor, material, equipment, services necessary to excavate, backfill, and compact for pavement as indicated on the drawings and specified herein.

1.2 RELATED DOCUMENTS

A. Drawings and general provisions of the Contract, including General and Supplementary Conditions and Division 1 Specification Sections, apply to this section.

1.3 SECTION INCLUDES

A. Excavate to line, grade and configuration as shown in the plans and specifications for proposed and future pavement areas.

B. Fill to line, grade and configuration as shown in the plans and specifications for proposed and future pavement areas.

C. Compacting fill materials in an acceptable manner as stated herein.

1.4 RELATED WORK

A. Section 02200 Earthwork

B. Section 02227 Aggregate Materials

C. Section 02505 Paving Base Course

D. Section 02511 Asphaltic Concrete Paving

E. Construction Drawings

F. Hawaii Standard Specifications for Road, Bridge, and Public Works Construction, State of Hawaii, Department of Transportation, Highways Divison, 2005 and as amended (Paragraphs on Measurement and Payment do not apply to this project.)

G. Geotechnical Engineering Exploration, *DHHL Pulehunui Wastewater System*, Geolabs, Inc. dated November 25, 2019, and any subsequent addenda thereafter.

1.5 QUALITY ASSURANCE

A. All work must conform to Section 203 – EXCAVATION AND EMBANKMENT of the Hawaii Standard Specifications.

B. An independent testing laboratory hired and paid for by the Contractor shall perform testing on-site.

1.6 SUBMITTALS

A. Shop drawings or details pertaining to excavating and filling for pavement are not required unless otherwise shown on the drawings or specified elsewhere, or if contrary procedures to the project documents are proposed.

B. Submit a sample of each type of off-site fill material that is to be used in backfilling in an air-tight, 10 lb. container for the testing laboratory or submit a gradation and certification of the aggregate material that is to be used to the testing laboratory for review.

C. Submit compaction test results.

PART 2 – PRODUCTS

2.1 MATERIALS

A. Fill materials from on-site as specified in Section 02200 and Geotechnical Engineering Exploration, *DHHL Pulehunui Wastewater System*, Geolabs, Inc. dated November 25, 2019, and any subsequent addenda thereafter.

B. Imported Fill material, as specified in Section 02200 and Geotechnical Engineering Exploration, *DHHL Pulehunui Wastewater System*, Geolabs, Inc. dated November 25, 2019, and any subsequent addenda thereafter.

C. Aggregate material as specified in Section 02227.

PART 3 – EXECUTION

3.1 PREPARATION

A. Identify all lines, elevations and grades necessary to construct pavements, curbs, swales, bases, walkways and roadways as shown in the plans and specifications.

B. Carefully protect benchmarks, property corners, monuments or other reference points.

C. Locate and identify all site utilities that have previously been installed and may be in danger of damage by grading operations.

D. Locate and identify all existing utilities that are to remain and protect them from damage.

E. Over excavate and properly prepare areas of subgrade that are not capable of supporting the proposed systems. These areas shall be stabilized by using acceptable aggregate material placed and compacted as specified.

3.2 EXCAVATION

A. Excavate roadway and pavement areas to line and grade as shown in the plans and specifications.

B. Engage all suitable material into the project fill areas as specified in Section 02200.

C. Unsuitable excavated material is to be disposed of in a manner and location that is acceptable to the Owner and local governing agencies.

D. Perform excavation using capable, well-maintained equipment and methods acceptable to the Owner or Owner's Representative and the project document requirements.

3.3 COMPACTION

A. Maintain optimum moisture content of fill materials to attain required compaction density.

B. All materials shall be tested in accordance with Section 02200.

C. An independent testing laboratory hired and paid for by the Contractor shall perform testing on-site.

D. Compaction test for on-site pavement areas will be as specified in Section 02200 together with the following for paving areas:

   i. In cut areas not less than one compaction test for every 10,000 square feet or fraction thereof.

   ii. In fill areas, same rate of testing for each 8" lift (measured loose).

E. If compaction requirements are not complied with at any time during construction process, remove and recompact deficient areas until proper compaction is obtained at no additional expense to the Owner.

F. Compact fills in 8-inch loose lifts. The pavement subgrade should be scarified to a minimum depth of 8 inches, moistened to at least 2 percent above optimum moisture content, and compacted to a minimum 95 percent compaction as determined by ASTM D 1557. The base course should also be compacted to a minimum 95 percent compaction.

3.4 Maintenance of Subgrade

A. Finished subgrades shall be verified to ensure proper elevation and conditions for construction above subgrade.

B. Protect subgrade from excessive wheel loading during construction including conrete trucks and dump trucks.

C. Remove areas of finished subgrade found to have insufficient compaction density to depth necessary and replace in a manner that will comply with compaction requirements by use of material equal to or better than best subgrade material on-site. Surface of subgrade after compaction shall be hard, uniform, smooth, stable, and true to grade and cross-section.

3.5 FINISH GRADE

A. Finish grading shall be in accordance with Section 02200 and as more specifically stated herein.

B. Grading of paving areas shall be checked by string line from grade stakes (blue tops) set at not more than 50' centers. Tolerances of 0.05 feet, more or less, may be permitted. Contractor to provide engineering and field staking necessary for verification of lines, grades, and elevations.

END SECTION

SECTION 02227 – AGGREGATE MATERIALS

PART 1 – GENERAL

1.1 SUMMARY

A. General Requirements:This work shall consist of furnishing, spreading and compacting aggregate materials on the prepared subgrade, in accordance with the requirements of these specifications.

1.2 RELATED DOCUMENTS

A. Drawings and general provisions of the Contract, including General and Supplementary Conditions and Division 1 Specification Sections, apply to this section.

1.3 SCOPE

A. Aggregate Materials

B. Imported Borrow

1.4 RELATED WORK

A. Section 02100 – Site Preparation

B. Section 02200 – Earthwork

C. Section 02221 – Excavation, Backfilling, and Compacting for Structures

D. Section 02222 – Excavation, Backfilling, and Compacting for Utilities

E. Section 02223 – Excavation, Backfilling, and Compacting for Pavement

F. Section 02505 – Paving Base Course

G. Construction Drawings

H. Hawaii Standard Specifications for Road, Bridge, and Public Works Construction, State of Hawaii, Department of Transportation, Highways Divison, 2005 and as amended (Paragraphs on Measurement and Payment do not apply to this project.)

I. Geotechnical Engineering Exploration, *DHHL Pulehunui Wastewater System,* Geolabs, Inc. dated November 25, 2019, and any subsequent addenda thereafter.

1.5 REFERENCE STANDARDS

A. American Society for Testing and Materials (ASTM) latest edition.

i. C136 Method for Sieve Analysis of Fine and Course Aggregates

ii. D1557 Test for Moisture – Density Relations of Soils Using 10-lb (4.5 Kg) Rammer and 18-inch (457 mm) Drop (Modified Proctor)

iii. D2167 Test Density of Soil in Place by the Rubber Balloon Method

iv. D2487 Classification of Soils for Engineering Purposes

v. D2922 Test for Density of Soil and Soil-Aggregate in Place by Nuclear Methods (Shallow Depth)

vi. D3017 Test for Moisture Content of Soil and Soil-Aggregate in Place by Nuclear Methods (Shallow Depth)

vii. D4318 Test for Plastic Limit, Liquid Limit, and Plasticity Index of Soils

B. American Association of State Highway and Transportation Officials (AASHTO) latest edition

i. T 180 Moisture-Density Relations of Soils Using a 10-lb. (4.54 Kg) Rammer and an 18 inch (457mm) Drop

ii. M147 Materials for Aggregate and Soil-Aggregate

1.6 QUALITY ASSURANCE

A. Tests and analysis of aggregate material will be performed in accordance with standard ASTM and AASHTO procedures listed herein.

1.7 SUBMITTALS

A. Submit in airtight containers a 10 pound sample of each aggregate or mixture that is to be incorporated into the project to the testing laboratory designated by the Contractor.

B. Submit the name of each material supplier and specific type and source of each material. Any change in source throughout the job requires approval of the Owner's Representative.

C. Submit materials certificate to on-site Independent Testing Laboratory , which is signed by material producer and Contractor, certifying that materials comply with, or exceed, the requirements herein.

PART 2 – PRODUCTS

2.1 MATERIALS

A. Crushed Rock (ASTM Designation Nos. 1, 2, 4, 67 and 10) shall conform to the requirements of Section 703 - AGGREGATES of the Hawaii Standard Specifications.

B. Imported fill should be in compliance with the geotechnical recommendations and the Hawaii Standard Specifications.

PART 3 – EXECUTION

3.1 EXAMINATION

A. Contractor shall verify that the subgrade has been inspected, tested and the gradients and elevations are correct, dry and properly prepared.

3.2 CONSTRUCTION

A. Aggregate Materials shall be installed in accordance with the requirements of the respective Sections, and Section 304 – AGGREGATE BASE COURSE and Section 305 – AGGREGATE SUBBASE COURSE of the Standard Specifications.

3.3 STOCKPILING

A. Stockpile on-site at locations indicated by the Owner or Owner's Representative in such a manner that there will be no standing water or mixing with other materials.

3.2 BORROW SITES

A. Upon completion of borrow operations, clean up borrow areas as indicated on the plans in a neat and reasonable manner to the satisfaction of the property owner, the Owner or Owner's Representative.

3.3 TRANSPORTATION

A. Off-site materials shall be transported to the project using well maintained and operating vehicles. Once on the job site, all transporting vehicles shall stay on designated haul roads and shall at no time endanger any of the improvements by rutting, overloading or pumping the haul road.

END SECTION

SECTION 02270 – SLOPE PROTECTION AND EROSION CONTROL

PART 1 – GENERAL

1.1 SUMMARY

A. General Requirements: Furnish all labor, materials, tools and equipment required to provide adequate slope protection and erosion control as indicated on the drawings and specified herein.

1.2 RELATED DOCUMENTS

A. Drawings and general provisions of the Contract, including General and Supplementary Conditions and Division 1 Specification Sections, apply to this section.

1.3 SCOPE

A. Temporary and permanent erosion control systems

B. Slope Protection Systems

C. Detailed plans, diagrams, and written site-specific best management practices (BMP); constructing, maintaining, and repairing temporary water pollution, dust, and erosion control measures at the project site, including local material sources, borrow site, work areas and haul roads; removing and disposing hazardous wastes; control of fugitive dust (defined as uncontrolled emission of solid airborne particulate matter from any source other than combustion); and complying with applicable County, State and Federal permit conditions.

D. Work associated with dewatering activities and complying with conditions of the National Pollutant Discharge Elimination System (NPDES) general permit coverage authorizing discharges associated with construction activity dewatering.

1.4 RELATED WORK

A. Section 02100 – Site Preparation

B. Section 02200 – Earthwork

C. Erosion Control Plan

D. Construction Drawings

1.5 ENVIRONMENTAL REQUIREMENTS

A. The Contractor shall protect adjacent properties and water resources from erosion and sediment damage throughout the life of the contract.

B. The Contractor shall be responsible for stormwater management practices per the NPDES permit obtained for this project.

PART 2 – PRODUCTS

2.1 MATERIALS

A. Quick growing grass such as rye. Grass shall be suitable to the area and provide a temporary cover that will not compete later with permanent cover.

B. Hay or Straw Bales.

C. Silt Fences. Silt fences shall be synthetic filter fabric mounted on steel posts and embedded in compacted ground in accordance with contract documents, and shall be in compliance with ASTM D 6462, Standard Practice for Silt Fence Installation. Silt fence posts shall be spaced a maximum of 6 feet apart.

D. Bale stakes for each bale shall be a minimum of 4 in length and shall be either 2 #4 rebars, 2 steel pickets or 2-2”x2” hardwood stakes driven 1’-6” to 2”-0” into ground.

E. Temporary mulches such as loose hay, straw, netting, wood cellulose or agricultural silage.

F. Fence stakes shall be metal stakes a minimum of 5 feet in length.

PART 3 – EXECUTION

3.1 PREPARATION

A. Review site erosion control plan.

B. Deficiencies or changes in the erosion control plan as it is applied to current conditions will be brought to the attention of the Owner or Owner’s Representative and the Engineer for remedial action.

3.2 PRECONSTRUCTION REQUIREMENTS

A. Water Pollution, Dust, and Erosion Control Meeting. Submit site specific BMP to Owner’s Representative. Schedule a water pollution, dust, and erosion control meeting with Owner’s Representative after site specific BMP is accepted in writing by Engineer. Meeting shall be scheduled 14 days before start of construction work. Discuss sequence of work, plans and proposals for water pollution, dust, and erosion control.

B. Water Pollution, Dust, and Erosion Control Submittals.

Submit the following:

1. Written site-specific BMP describing activities to minimize water pollution and soil erosion into State waters, drainage or sewer systems. BMP shall include the following:

   a. An identification of potential pollutants and their sources.

   b. A list of all materials and heavy equipment to be used during

construction.

c. Descriptions of the methods and devices used to minimize the discharge of pollutants into State waters, drainage or sewer systems.

d. Details of the procedures used for the maintenance and subsequent removal of any erosion or siltation control devices.

e. Methods of removing and disposing hazardous wastes encountered or generated during construction.

f. Methods of removing and disposing concrete and asphalt pavement cutting slurry, concrete curing water, and hydrodemolition water.

g. Spill control.

h. Fugitive dust control, including dust from grinding, sweeping, or brooming off operations or combination thereof.

i. Methods of storing and handling of oils, paints and other products used for the project.

j. Material storage and handling areas, and other staging areas.

k. Concrete truck washouts.

l. Concrete waste control.

m. Fueling and maintenance of vehicles and other equipment.

n. Tracking of sediment offsite from project entries and exits.

o. Litter management.

p. Toilet facilities.

q. Other factors that may cause water pollution, dust and erosion control.

2. Provide plans indicating location of water pollution, dust and erosion control devices; provide plans and details of BMPs to be installed or utilized; show areas of soil disturbance in cut and fill, indicate areas used for storage of aggregate (indicate type of aggregate), asphalt cold mix, soil or waste, and show areas where vegetative practices are to be implemented. Indicate intended drainage pattern on plans. Include separate drawing for each phase of construction that alters drainage patterns. Indicate approximate date when device will be installed and removed.

3. Construction schedule.

4. Name(s) of individual(s) designated responsible for water pollution, dust, and erosion controls on the project site. Include home and business telephone numbers, fax numbers, and e-mail addresses.

5. Description of fill material to be used.

6. Date and sign BMP. Keep accepted copy on site throughout duration of the project. Revisions to the BMP shall be included with original BMP.

Modify contract documents to conform to revisions. Include actual date of installation and removal of BMP. Obtain written acceptance by Owner's Representative before revising BMP.

3.3 EROSION CONTROL AND SLOPE PROTECTION IMPLEMENTATION

A. Place erosion control systems in accordance with the erosion control plan and applicable details.

B. The Owner's Representative has the authority to limit the surface area of erodible earth material exposed by clearing and grubbing, excavation, borrow and embankment operations and to direct the Contractor to provide immediate permanent or temporary pollution control measures. The Contractor will be required to incorporate all permanent erosion control features into the project at the earliest practical time to minimize the need for temporary controls. Cut slopes shall be permanently seeded and mulched as the excavation proceeds to the extent considered desirable and practical.

C. The temporary erosion control systems installed by the Contractor shall be maintained as directed by the Owner's Representative to control siltation at all times during the life of the contract. The Contractor must respond to any maintenance or additional work ordered by the Owner's Representative within a 24 hour period.

D. Temporarily reroute surface drainage runoff from entering construction areas through use of interceptor ditches, berms and level spreaders. Contractor shall insure that discharge points do not concentrate flows, thereby, causing erosion to downstream areas. Install erosion protection and flow dissipators downstream to prevent erosion.

E. Slopes that erode easily shall be temporary seeded as the work progresses with a wheat, rye or oats application.

F. Place permanent erosion control features in accordance with the construction plans and details, and recommend manufacturer guidelines.

3.4 CONSTRUCTION REQUIREMENTS

A. Do not begin work until submittals detailed in Subsection 3.2(B) – Water Pollution, Dust, and Erosion Control Submittals are completed and accepted in writing by Engineer.

B. Install, maintain, monitor, repair and replace site-specific BMP measures, such as for water pollution, dust and erosion control; or removal and disposal of hazardous waste indicated on plans, concrete cutting slurry, concrete curing water.

C. Furnish, install rain gage in a secure location for projects that require NPDES permit from the Department of Health prior to field work including installation of site-specific BMP. Provide rain gage with a tolerance of at least 0.05 inches of rainfall, and an opening of at least 1-inch diameter. Install rain gage on project site in an area that will not deter rainfall from entering the gage opening. Maintain rain gage and replace rain gage that is stolen, does not function properly or accurately, is worn out, or

needs to be relocated. Do not begin field work until rain gage is installed and site specific BMPs are in place. Do not begin field work until rain gage is installed and site specific BMPs are in place.

D. Modify and resubmit plans and construction schedules to correct conditions that develop during construction which were unforeseen during the design and pre-construction stages. Coordinate temporary control provisions with permanent control features throughout the construction and post-construction period.

E. Limit the maximum surface area of earth material exposed at any time to 10-acres. Do not expose or disturb surface area or earth material (including clearing and grubbing) until BMP measures are installed and accepted in writing by Engineer. Protect temporarily or permanently disturbed soil surface from rainfall impact, runoff and wind before end of workday.

F. Protect exposed or disturbed surface area with mulches, grass seeds or hydromulch. Spray mulches at a rate of 2,000 pounds per acre. Add tackifier to mix at a rate of 85 pounds per acre. Apply grass seeds at a rate of 125 pounds per acre. For hydromulch, use the ingredients and rates required for mulches and grass seeds. Apply fertilizer to mulches, grass seed or hydromulch at a rate of 450 pounds per acre. Apply an additional 250 pounds per acre every 90 calendar days.

G. Install velocity dissipation measures when exposing erodible surfaces greater than 15-feet in height.

H. BMP measures shall be in place and operational (such as shaping the earthwork to control and directing the runoff) at the end of workday. Shaping earthwork may include constructing earth berms or interceptor ditches along the top edges of embankments if acceptable to Engineer.

I. Install and maintain stabilized construction entrances and wheel washes to minimize tracking of dirt and mud onto roadways. Restrict traffic to stabilized construction areas only. Clean dirt, mud, or other material tracked on the road immediately. Modify stabilized construction entrances to prevent mud from being tracked onto road. Stabilize entire access roads if necessary.

J. Protect ditches, channels and other drainageways leading away from cuts and fills at all times by:

i. Hydro-mulching the lower region of embankments in the immediate area.

ii. Installing check dams and other velocity dissipation devices.

iii. Other methods acceptable to Engineer

K. Provide for controlled discharge of waters impounded, directed or controlled by project activities or erosion control measures.

L. Cover exposed surface of materials completely with tarpaulin or similar device when transporting aggregate, soil, excavated material or material that may be source of fugitive dust.

M. Clean-up and remove any pollutant that can be attributed to Contractor's operations.

N. Install or modify BMP measures due to change in Contractor's means and methods, or for field revisions or omitted conditions to the accepted site specific BMP. Contractor shall insure the satisfactory performance of the BMP at all times.

3.5 BMP REPORT SUBMITTALS

A. Properly maintain all BMP features. Inspect, prepare a written report and make repairs to BMP measures at following intervals:

1. Weekly during dry periods.
2. Within 24-hours of any rainfall of 0.5-inch or greater which occurs in a 24-hour period.
3. Daily during periods of prolonged rainfall.
4. When existing erosion control measures are damaged or not operating properly as required by site specific BMP.

B. Maintain records of inspections of BMP work. Keep continuous records for duration of the project. Submit weekly copy of records to Owner's Representative. Remove, destroy, replace or relocate any BMP that must be removed, destroyed, replaced or relocated due to potential or actual flooding, or potential danger or damage to project or public.

C. Contractor's designated representative shall address any BMP concerns brought up by Owner's Representative or Engineer within 24-hours of notification, including weekends and holidays. In the event of Contractor's failure to satisfactorily address these concerns, Owner reserves the right to employ outside assistance to provide necessary corrective measures. Owner will charge Contractor such costs incurred, such as remedial costs and fines, plus any associated project engineering costs. Owner will make appropriate deductions from Contractor's monthly progress estimate. Failure to apply BMP measures shall result in either or both the establishment and increase in the amount of retainage due to unsatisfactory progress or withholding of monthly progress payment. Continued failure to apply BMP measures may result in one or more of the following: assessment of liquidated damages, suspension, or cancellation of contract with Contractor being fully responsible for all additional costs incurred by Owner, including any fines, penalties, and remedial costs.

3.6 HYDROTESTING ACTIVITIES

A. If work includes removing, relocating or installing waterlines, and Contractor elects to flush waterline or discharge hydrotesting effluent into State waters or County drainage systems, submit site specific information to the State Department of Health, Clean Water Branch (DOH-CWB). Do not begin hydrotesting activities until the DOH-CWB has issued a Notice of General Permit Coverage (NGPC). Hydrotesting operations shall be in accordance with conditions in NGPC. Submit a copy of the NPDES Hydrotesting Waters Application and Permit to Owner's Representative.

3.7 DEWATERING ACTIVITIES

A. If excavation or backfilling operations require dewatering, and Contractor elects to discharge dewatering effluent into State waters or existing drainage systems, obtain NPDES General Permit Coverage authorizing discharges associated with construction activity dewatering from Department of Health, Clean Water Branch (DOH-CWB). If permit is required, prepare and submit permit application (CWB-NOI Form G) to DOH-CWB. Do not begin dewatering activities until DOH-CWB has

issued Notice of General Permit Coverage (NGPC). Conduct dewatering operations in accordance with conditions in NGPC. Submit copy of NPDES Hydrotesting Waters Application and Permit to Owner's Representative.

3.8 STORMWATER RUNOFF CONTROL PRACTICES AND MAINTENANCE PLAN

A. For the entire construction period, prior to acceptance of the site by the Owner or Building Contractor, the Site Contractor shall adhere to the Stormwater Runoff Control Practices and Maintenance Plan in addition to the provisions in these Technical Specifications.

3.9 TRANSPORTATION

A. Off-site materials shall be transported to the project using well maintained and operating vehicles. Once on the job site, all transporting vehicles shall stay on designated haul roads and shall at no time endanger any of the improvements by rutting, overloading or pumping the haul road.

END SECTION

SECTION 02505 – PAVING BASE COURSE

PART 1 – GENERAL

1.1 SUMMARY

A. General Requirements: Furnish all labor, material, equipment and services necessary for construction of the paving base course as indicated on the Drawings and specified herein.

1.2 RELATED DOCUMENTS

A. Drawings and general provisions of the Contract, including General and Supplementary Conditions and Division 1 Specification Sections, apply to this section.

1.3 SCOPE

A. Aggregate Base Course

B. Aggregate Sub-Base Course

1.4 RELATED WORK

A. Section 02100 Site Preparation

B. Section 02200 Earthwork

C. Section 02223 Excavation, Backfilling, and Compacting for Pavement

D. Section 02227 Aggregate Materials

E. Section 02511 Asphaltic Concrete Paving

F. Construction Drawings

G. Hawaii Standard Specifications for Road, Bridge, and Public Works Construction, State of Hawaii, Department of Transportation, Highways Divison, 2005 and as amended (Paragraphs on Measurement and Payment do not apply to this project.)

H. Geotechnical Engineering Exploration, *DHHL Pulehunui Wastewater System,* Geolabs, Inc. dated November 25, 2019, and any subsequent addenda thereafter.

1.5 REFERENCE STANDARDS

A. American Society for Testing and Materials (ASTM) latest edition.

i. D1556 - Test Method for Density of Soil in-place by the Sand-Cone Method

ii. D1557 Test for Moisture – Density Relations of Soils Using 10-lb (4.5 Kg) Rammer and 18-inch (457 mm) Drop (Modified Proctor)

iii. D2167 Test Density of Soil in Place by the Rubber Balloon Method

iv. D2922 Test for Density of Soil and Soil-Aggregate in Place by Nuclear Methods (Shallow Depth)

v. D3017 Test for Moisture Content of Soil and Soil-Aggregate in Place by Nuclear Methods (Shallow Depth)

PART 2 – PRODUCTS

2.1 MATERIALS

A. Aggregate base course shall conform to Section 304 ─ AGGREGATE BASE COURSE of the Hawaii Standard Specifications.

B. Aggregate subbase course shall conform to Section 305 ─ AGGREGATE SUBBASE COURSE of the Hawaii Standard Specifications.

2.2 SUBMITTALS

A. Submit materials certificate to on-site Independent Testing Laboratory which is signed by material producer and Contractor, certifying that materials comply with, or exceed, the requirements herein.

PART 3 – EXECUTION

3.1 EXAMINATION

A. Contractor shall verify that the subgrade has been inspected, tested and the gradients and elevations are correct, dry and properly prepared.

3.2 CONSTRUCTION

A. Aggregate base course shall be installed in accordance with the requirements of Section 304 ─ AGGREGATE BASE COURSE of the Hawaii Standard Specifications.

B. Aggregate subbase course shall be installed in accordance with the requirements of Section 305 ─ AGGREGATE SUBBASE COURSE of the Hawaii Standard Specifications.

3.3 FIELD QUALITY CONTROL

A. An Independent Testing Laboratory selected and paid for by the Contractor, subject to Owner review and approval, shall perform construction testing of in-place base courses for compliance with requirements for thickness, compaction, density and tolerance. Paving base course tolerances shall be verified (by rod and level readings on not more than fifty-foot centers) to be not more than 0.05 foot above design

elevation which will allow for paving thickness' as shown in the Drawings. Contractor shall provide instruments and a suitable benchmark.

B. The following tests shall be performed on each type of material used as base course material:

   i. Moisture and Density Relationship: ASTM D1557

   ii. Mechanical Analysis: AASHTO T88

   iii. Plasticity Index: ASTM D4318

   iv. Base material thickness: Perform one test for each 10,000 square feet of in-place base material area.

   v. Base material compaction: Perform one test in each lift for each 10,000 square feet of in-place base material area.

   vi. Test each source of base material for compliance with the requirements of these specifications.

C. Field density tests for in-place materials shall be performed according to one of the following standards as part of construction testing requirements:

   i. Sand Cone Method: ASTM D1556

   ii. Balloon Method: ASTM D2167

   iii. Nuclear Method: ASTM D2922, Method B (Direct Transmission)

D. An Independent Testing Laboratory shall prepare test reports that indicate test location, elevation data, and test results. The Owner or Owner's Representative, Engineer, and Contractor shall be provided to copies of the reports within 96 hours of time test was preformed. In event that any test preformed fails to meet these Specifications, the Owner or Owner's Representative, Engineer, and Contractor shall be notified immediately by Independent Testing Laboratory. The Owner or Owner's Representative reserves the right to employ Independent Testing Laboratory and to direct any testing that is deemed by them to be necessary. Contractor shall provide free access to site for testing activities.

E. Work must conform to Section 304 – AGGREGATE BASE COURSE and Section 305 – AGGREGATE SUBBASE COURSE of the Hawaii Standard Specifications.

END SECTION

SECTION 02511 – ASPHALTIC CONCRETE PAVING

PART 1 – GENERAL

1.1 SUMMARY

A. General Requirements: Furnish all labor, material, equipment and services necessary for construction of the asphalt concrete paving as indicated on the Drawings and specified herein.

1.2 RELATED DOCUMENTS

A. Drawings and general provisions of the Contract, including General and Supplementary Conditions and Division 1 Specification Sections, apply to this section.

1.3 SECTION INCLUDES

A. Asphaltic Concrete Paving

1.4 RELATED WORK

A. Section 02230 Excavation, Backfill, and Compacting for Pavement

B. Section 02505 Paving Base Course

C. Section 02584 Pavement Markings

D. Construction Drawings

E. Hawaii Standard Specifications for Road, Bridge, and Public Works Construction, State of Hawaii, Department of Transportation, Highways Divison, 2005 and as amended (Paragraphs on Measurement and Payment do not apply to this project.

F. Geotechnical Engineering Exploration, *DHHL Pulehunui Wastewater System,* Geolabs, Inc. dated November 25, 2019, and any subsequent addenda thereafter.

1.5 SUBMITTALS

A. Design Mix: Before any asphaltic concrete paving is constructed, submit actual design mix to the Owner or Owner's Representative and Engineer for review and/or approval. Design mix submittal shall follow the format as indicated in the Asphalt Institute Manual MS-2, Marshall Stability Method; and shall include the type/name of the mix, gradation analysis, grade of asphalt cement used, Marshall Stability (lbs.), flow, effective asphalt content (percent), and direct references to the applicable highway department specifications sections for each material. The design shall be for a mixture listed in the current edition of the applicable state roadway specifications. Mix designs over three (3) years old will not be accepted by the Owner or Owner's Representative.

B. Material Certificates: Submit materials certificate to on-site independent testing laboratory which is signed by material producer and Contractor, certifying that materials comply with, or exceed, the requirements herein.

1.6 REFERENCE STANDARDS

A. MS-2-Mix design methods for asphaltic concrete and other hot mix types per The Asphalt Institute (AI)

B. MS-3- Asphalt Plant Manual per The Asphalt Institute (AI)

C. Hot Mix Asphalt Paving Handbook per US Army Corp of Engineers, UN-13 (CE MP-ET)

D. MS-19- Basic Asphalt emulsion Manual per The Asphalt Institute (AI)

E. ASTM D946 – Penetration – Graded Asphalt Cement for use in Pavement Construction

F. AASHTO M-226/ASTM D3381Asphalt Cement

G. AASHTO M-140/ASTM D997 or AASHTO M-208/ASTM D-2397 Tack Coat

H. AASHTO M-117/ASTM D242 Mineral Filler

I. AASHTO T-245/ASTM D 1559 Marshall Mix Design

PART 2 – PRODUCTS

2.1 MATERIALS

A. Asphalt concrete paving materials shall conform to the requirements of Section 401 – HOT MIX ASPHALT PAVEMENT and Section 703 – AGGREGATES of the Hawaii Standard Specifications.

2.2 EQUIPMENT

A. Maintain equipment in satisfactory operating condition and correct breakdowns in a manner that will not delay or be detrimental to progress of paving operations.

PART 3 – EXECUTION

3.1 PREPARATION

A. Remove loose material from compacted base material surface immediately before applying prime coat.

B. Proof roll prepared base material surface to check for areas requiring additional compaction and areas requiring removal and recompaction.

C. Do not begin paving work until deficient base material areas have been corrected and are ready to receive paving.

3.2 APPLICATIONS

A. Prime Coat:

i. Apply bituminous prime coat to all base material surfaces where asphaltic concrete paving will be constructed.

ii. Apply bituminous prime coat in accordance with APWA Section 2204 and applicable state highway specifications.

iii. Apply at minimum rate of 0.25 gallon per square yard over compacted base material. Apply to penetrate and seal, but not flood surface.

iv. Make necessary precautions to protect adjacent areas from overspray.

v. Cure and dry as long as necessary to attain penetration of compacted base and evaporation of volatile substances.

B. Tack Coat:

i. Apply to contact surfaces of previously constructed asphaltic concrete base courses or portland cement concrete and surfaces abutting or projecting into asphaltic concrete or into asphaltic concrete pavement.

ii. Apply tack coat to asphaltic concrete base course. Apply emulsified asphalt tack coat between each lift or layer of full depth asphaltic concrete and on surface of all such bases where asphaltic concrete paving will be constructed.

iii. Apply emulsified asphalt tack coat in accordance with APWA Section 2204 and applicable state highway specifications.

iv. Apply at minimum rate of 0.10 gallon per square yard of surface.

v. Allow to dry until at proper condition to receive paving.

3.3 ASPHALTIC CONCRETE PLACEMENT

A. Place asphaltic concrete mixture on completed compacted subgrade surface, spread, and strike off. Spread mixture at following minimum temperatures:

i. When ambient temperature is between 50°F and 60°F, mixture temp = 280°F

ii. When ambient temperature is higher than 60°F, mixture temp. = 275°F

B. Whenever possible, all pavement shall be spread by a finishing machine; however, inaccessible or irregular areas may be placed by hand methods. The hot mixture shall be spread uniformly to the required depth with hot shovels and rakes. After

spreading, the hot mixture shall be carefully smoothed to remove all segregated course aggregate and rake marks. Rakes and lutes used for hand spreading shall be of the type designed for use on asphalt mixtures. Loads shall not be dumped faster that they can be properly spread. Workers shall not stand on the loose mixture while spreading.

C. Paving Machine Placement: Apply successive lifts of asphaltic concrete in transverse directions with the surface course placed in the direction of surface-water flow. Place in typical strips not less than 10'-0" wide.

D. Joints: Make joints between old and new pavements or between successive days and work in a manner that will provide a continuous bond between adjoining work. Construction joints shall have same texture, density, and smoothness as other sections of asphaltic concrete course. Clean contact surfaces of all joints and apply tack coat.

3.4 ROLLING AND COMPACTION

A. The mixture, after being spread, shall be thoroughly compacted by rolling as soon as it will bear the weight of the rollers without undue displacement. The number, weight, and types of rollers and sequences of rolling operations shall be such that the required density and surface are consistently attained while the mixture is in a workable condition.

B. Compact mixture with hot hand tampers or vibrating plate compactors in areas inaccessible to rollers.

C. Breakdown Rolling: Accomplish breakdown or initial rolling immediately following rolling of joints and outside edge. Check surface after breakdown rolling, and repair displaced areas by loosening and filling with hot material.

D. Second Rolling: Follow breakdown rolling as soon as possible, while mixture is hot. Continue second rolling until mixture has been thoroughly compacted.

E. Finish Rolling: Perform finish rolling while mixture is still warm enough for removal of roller marks. Continue rolling until roller marks are eliminated and course has attained maximum density.

F. Patching: Remove and replace paving areas mixed with foreign materials and defective areas. Cut out such areas and fill with fresh, hot asphaltic concrete. Compact by rolling to maximum surface density and smoothness.

G. Protection: After final rolling, do not permit vehicular traffic on pavement until it has cooled and hardened. Erect barricades to protect paving from traffic until mixture has cooled enough not to become marked.

3.5 FIELD QUALITY CONTROL

A. An Independent Testing Laboratory hired by the Contractor, shall perform construction testing of in-place asphaltic concrete courses for compliance with requirements for thickness, compaction and surface smoothness. Asphaltic surface and base courses shall be randomly cored at a minimum rate of one core for every 10,000 square feet of paving. However, no less than three cores in light duty areas and three cores in heavy duty areas shall be obtained. Coring holes shall be immediately filled with full-depth asphalt or with concrete. Asphaltic Concrete pavement samples shall be tested for conformance with the mix design.

B. Grade Control: Establish and maintain required lines and elevations.

C. Thickness: In-place compacted thickness shall not be less than thickness specified on the drawings. Areas of deficient paving thickness shall receive a tack coat and a minimum 1" overlay; or shall be removed and replaced to the proper thickness, at the discretion of the Owner or Owner's Representative; until specified thickness of the course is met or exceeded at no additional expense to the Owner.

D. Surface Smoothness: Testing shall be performed on the finished surface of each asphalt concrete course for smoothness, using 10'-0" straightedge applied parallel with, and at right angles to centerline of paved area. The results of these tests shall be made available to the Owner or Owner's Representative upon request. Surfaces will not be acceptable if the following 10' straightedge tolerances for smoothness are exceeded:

   i. Base Course Surface: 1/4"

   ii. Wearing Course Surface: 3/16"

E. Check surface areas at intervals necessary to eliminate ponding areas. Remove and replace unacceptable paving as directed by Owner or Owner's Representative.

F. Compaction: Field density test for in place materials shall be performed by examination of field cores in accordance with one of the following standards:

   i. Bulk specific gravity of paraffin-coated specimens: ASTM D1188

   ii. Bulk specific gravity using saturated surface-dry specimens: ASTM D2726

   Rate of testing shall be one core per 10,000 square feet of pavement, with a minimum of 3 cores from heavy- duty areas and 3 cores from standard-duty areas. Cores shall be cut from areas representative of the project.

   Areas of insufficient compaction shall be delineated, removed, and replaced in compliance with the specifications at no expense to the Owner.

3.6 PUBLIC ROADWAYS

A. Asphalt concrete paving of all roadways shall conform to the requirements of Section 401 – ASPHALT CONCRETE PAVEMENT of the Hawaii Standard Specifications. The Hawaii Standard Specifications take precedence over all other provisions of this section.

END SECTION

SECTION 02525 – CONCRETE CURBS, DRIVEWAYS AND WALKS

PART 1 – GENERAL

1.1 SUMMARY

A. General Requirements: Furnish all labor, materials, tools and equipment required to construct the concrete curbs, driveways and walks as indicated on the drawings and specified herein.

1.2 RELATED DOCUMENTS

A. Drawings and general provisions of the Contract, including General and Supplementary Conditions and Division 1 Specification Sections, apply to this section.

1.3 SECTION INCLUDES

A. Work includes concrete curbs, ramps and sidewalks, and driveways.

1.4 RELATED WORK

A. Section 02230 Excavation, Backfill, and Compacting for Pavement

B. Section 02505 Paving Base Course

C. Construction Drawings

D. Hawaii Standard Specifications for Road, Bridge, and Public Works Construction, State of Hawaii, Department of Transportation, Highways Divison, 2005 and as amended (Paragraphs on Measurement and Payment do not apply to this project.)

E. Geotechnical Engineering Exploration, *DHHL Pulehunui Wastewater System,* Geolabs, Inc. dated November 25, 2019, and any subsequent addenda thereafter.

1.5 SUBMITTALS

A. The Contractor shall submit for approval, the mix intended to be used at least 14 days before actual concrete placing operation. Test results shall be submitted together with the mix design to the Owner or Owner's Representative.

PART 2 – PRODUCTS

2.1 CONCRETE

A. Conform to SECTION 601 - STRUCTURAL CONCRETE of the Hawaii Standard Specifications. Class of concrete shall be determined by the use. Unless otherwise noted on the plans or specified herein, the concrete shall be Class "A".

2.2 REINFORCING STEEL

A. Conform to SECTION 602 - REINFORCING STEEL of the Hawaii Standard Specifications.

PART 3 – EXECUTION

3.1 REINFORCED CONCRETE DRIVEWAYS

A. Conform to Section 610 – REINFORCED CONCRETE DRIVEWAYS of the Hawaii Standard Specifications.

3.2 CONCRETE SIDEWALKS

A. Conform to Section 634 – PORTLAND CEMENT CONCRETE SIDEWALKS of the Hawaii Standard Specifications.

3.3 CONCRETE CURBS

A. Conform to Section 638 – PORTLAND CEMENT CONCRETE CURB AND GUTTER of the Hawaii Standard Specifications.

END SECTION

SECTION 02584 – PAVEMENT MARKINGS

PART 1 – GENERAL

1.1 SUMMARY

A. General Requirements: Furnish all materials, labor, tools and equipment required to install pavement markings as indicated on the drawings and specified herein.

1.2 RELATED DOCUMENTS

A. Drawings and general provisions of the Contract, including General and Supplementary Conditions and Division 1 Specification Sections, apply to this section.

1.3 SECTION INCLUDES

A. Painted Pavement Markings

B. Painted Curbs and Guard Posts

1.4 RELATED WORK

A. Section 02511 Asphaltic Concrete Paving

B. Construction Drawings

C. Hawaii Standard Specifications for Road, Bridge, and Public Works Construction, State of Hawaii, Department of Transportation, Highways Divison, 2005 and as amended (Paragraphs on Measurement and Payment do not apply to this project.)

1.5 PROJECT CONDITIONS

A. Maintain access for vehicular and pedestrian traffic as required for other construction activities. Utilize flagmen, barricades, warning signs and warning lights as required.

PART 2 – PRODUCTS

2.1 MATERIALS FOR PAVEMENT MARKINGS

A. Requirements of Section 629 - PAVEMENT MARKINGS, of the Hawaii Standard Specifications and current amendments to this section.

B. All pavement markings and striping within State and County rights-of-way shall be thermoplastic extrusion and in compliance with the Hawaii Standard Specifications for Road and Bridge Construction, 2005.

2.2 MATERIALS FOR PAINTED CURBS, GUARD POSTS, AND LIGHT POLE BASES

A. The paint shall be a non-bleeding, quick-drying, alkyd petroleum base paint suitable for traffic-bearing surface and shall meet FS TTP-85E and mixed in accordance with manufacturer's instructions before application.

PART 3 – EXECUTION

3.1 PREPARATION AND APPLICATION

A. Surface preparation and installation of pavement striping, markers, symbols and words shall conform to the requirements of Section 629 PAVEMENT MARKINGS of the Hawaii Standard Specifications and current amendments to this section.

B. Where existing pavement markings are indicated on the drawings to be removed or would interfere with the adhesion of new paint, a motorized abrasive device shall be used to remove the markings. The equipment employed shall not damage the existing paving or create a surface hazardous to vehicle or pedestrian traffic. In all areas within public rights-of-way, the method of marking removal shall be approved by governing authority.

3.2 PREPARATION FOR PAINTED CURBS, GUARD POST, AND LIGHT POLE BASES

A. Sweep and clean surface to eliminate loose material and dust.

3.3 APPLICATION FOR PAINTED SURFACES

A. Apply two (2) coats of paint at manufacturer recommended rate without the addition of thinner, with a maximum of 100 square feet per gallon. Apply with mechanical equipment to produce uniform straight edges. At sidewalk curbs, use a straightedge to ensure a uniform, clean, and straight stripe.

B. The following items shall be marked with the colors noted below unless otherwise shown:

i. Pedestrian Crosswalks: White

ii. Lane Striping where separating traffic in opposite directions: Yellow

iii. Lane Striping where separating traffic in the same direction: White

iv. Handicap Symbols: Per local code

v. Parking Stall Striping: White, unless otherwise noted on plans.

END SECTION

SECTION 02605 - SEWER MANHOLES

PART 1 - GENERAL

1.1 SUMMARY

A. General Requirements: Furnish all labor, material, equipment and services necessary to install sewer manholes, as indicated on the plans and specified herein.

1.2 RELATED DOCUMENTS

A. Drawings and general provisions of the Contract, including General and Supplementary Conditions and Division 1 Specification Sections, apply to this section.

1.3 SECTION INCLUDES

A. Monolithic concrete manhole barrel with the option of monolithic concrete or masonry transition to lid frame, covers, anchorage and accessories.

B. Modular precast concrete manhole barrel with tongue-and-groove joints and with the option of precast concrete or masonry transition to lid frame, covers, anchorage and accessories.

C. Masonry manhole barrel with masonry transition to lid frame, covers, anchorage and accessories.

1.4 RELATED WORK

A. Section 02222 - Excavation, Backfilling and Compacting for Utilities

B. Section 02730 - Sanitary Sewer System

C. Construction Drawings

D. Standard Details for Public Works Construction, County of Maui, September 1984, and all subsequent amendments and additions referred to as “County Standard Details.”

E. Hawaii Standard Specifications for Road, Bridge and Public Works Construction, State of Hawaii, Department of Transportation, Highways Division, 2005 and current amendments (Paragraphs on Measurement and Payment do not apply to this project).

1.5 REFERENCES

A. ASTM C923 - Resilient Connectors Between Reinforced Concrete Manhole Structures and Pipes.

1.6 SUBMITTALS

A. Shop Drawings: Indicate reference to Construction Drawings of manhole locations, elevations, piping with sizes, locations and elevations of penetrations. For precast concrete structures, submit shop drawings including design structural calculations, stamped by a structural engineer, licensed in the State of Hawaii.

B. Product Data: Provide data for manhole covers, manhole steps, component construction, features, configuration, and dimensions.

1.7 QUALITY ASSURANCE

A. All work shall conform to the Standard Specifications for Roads and Bridges Construction, State of Hawaii, Department of Transportation, Highways Division, 2005.

PART 2 - PRODUCTS

2.1 MANHOLES

A. Materials used for sewer manholes within State or County easements shall be in accordance with the following sections of the Hawaii Standard Specifications:

i. Sewer Manholes: Section 626

ii. Inverts of sewer manholes shall be channelized

iii. Portland Cement Concrete: Section 601

iv. Reinforcing Steel: Section 602

2.2 COMPONENTS

A. Frame and Cover: Provide frame and cover in accordance with Section 626 – MANHOLES AND VALVE BOXES FOR WATER AND SEWER SYSTEMS of the Hawaii Standard Specifications.

PART 3 - EXECUTION

3.1 EXAMINATION

A. Verify items provided by other sections of Work are properly sized and located.

B. Verify that built-in items are in proper location, and ready for roughing into Work.

C. Verify excavation for manholes is correct.

D. The Contractor shall be responsible for precisely laying out the various exterior utility lines shown on the Construction Drawings as provided elsewhere in these specifications. The locations shown on the Construction Drawings of various

existing utility lines which the new lines are to cross over or under or connect to, were determined on the basis of the best information available, however, no assurance can be provided that the actual locations will be precisely as shown on the Construction Drawings. Expose all utility lines at crossing prior to installation and any interference encountered should be reported to the Construction Manager and his instructions followed.

3.2 PREPARATION

A. Coordinate placement of inlet and outlet pipe or duct sleeves as indicated on plans.

B. Protect benchmarks, property corners, and other survey monuments from damage or displacement. If marker needs to be removed it shall be referenced by Surveyor licensed in the State of Hawaii and replaced, as necessary, by same.

3.3 PRECAST MANHOLE CONSTRUCTION

A. Installation of Precast Sewer Manholes shall be in accordance with Section 626 – MANHOLES AND VALVE BOXES FOR WATER AND SEWER SYSTEMS of the Hawaii Standard Specifications.

3.4 CAST-IN-PLACE MANHOLE CONSTRUCTION

A. Installation of Cast-In-Place Manholes shall be in accordance with Section 626 – MANHOLES AND VALVE BOXES FOR WATER AND SEWER SYSTEMS of the Hawaii Standard Specifications.

3.5 CLEANUP

A. Upon completion, manholes shall be thoroughly cleaned of all debris.

B. Cast iron frames, covers and metal rungs shall be painted with two coats of coal tar paint or approved equal.

END SECTION

SECTION 02660 – WATER DISTRIBUTION SYSTEM

PART 1 – GENERAL

1.1 SUMMARY

A. General Requirements: Furnish all labor, material, equipment and services necessary to install water system, as indicated on the plans and specified herein.

1.2 RELATED DOCUMENTS

A. Drawings and general provisions of the Contract, including General and Supplementary Conditions and Division 1 Specification Sections, apply to this section.

1.3 SECTION INCLUDES

A. Provide the on-site water system. This shall include, but not be limited to the following: pipe and fittings for on-site water lines including domestic water line, valves, setting line locations, elevations, and grades for water distribution systems work and control system for duration of work including careful maintenance of benchmarks, property corners, monuments, or other reference points.

B. Furnishing labor, materials, services, equipment and other items necessary for the construction of water system. This shall include, but not be limited to, connection to existing waterline, valves, and traffic control.

1.4 RELATED WORK

A. Section 02222 Excavation, Backfilling and Compacting for Utilities

B. Section 02227 Aggregate Materials

C. Construction Drawings

D. “Water System Standards”, Department of Water Supply, County of Maui, State of Hawaii, 2002 and current amendments.

1.5 REFERENCES

A. AWWA C901 – Polyethylene (PE) Pressure Pipe & Tubing, ½ inch through 3 inch for Water

B. ASTM D3261 – Butt Heat Fusion PE Fittings for PE Pipe and Tubing

C. ASTM D3350 – Standard Specifications for PE Pipe and Fittings Materials

D. ANSI/AWWA C104 – Cement-Mortar Lining for Ductile-Iron Pipe and Fittings for Water

E. ANSI/AWWA C105 – Polyethylene Encasement for Ductile Iron Piping for Water and Other liquids

F. ANSI/AWWA C110 – Ductline-Iron Gray Iron Fittings, 3 inch through 48 inch, for Water and Other Liquids

G. ANSI/AWWA C111 – Rubber-Gasket Joints for Ductile Iron and Grey-Iron Pressure Pipe and Fittings

H. ANSI/AWWA C151 – Ductile-Iron Pipe, Centrifugally Cast in Metal Molds or Sand-Lined Molds, for Water or Other Liquids

I. ANSI/AWWA C500 – Gate Valves, 3 inch through 48 inch NPS, for Water and Sewage Systems

J. ANSI/AWWA C504 – Rubber Seated Butterfly Valves

K. ANSI/AWWA C508 – Swing-Check Valves for Waterworks Service, 2 inch through 24 inch NPS

L. ANSI/AWWA C509 – Resilient Seated Gate Valves for Water Supply Service

M. ANSI/AWWA C511 – Reduced-Pressure Principle Backflow-Prevention Assembly

N. ANSI/AWWA C600 – Installation of Ductile-Iron Water Mains and Appurtenances

O. ANSI/AWWA C651 – Disinfecting Water Mains

P. AWWA C600-82 – Hydrostatic Testing

1.6 SUBMITTALS

A. Product Data: Provide Owner's Representative and Engineer with data on pipe materials, pipe fittings, valves and accessories.

B. Manufacturer's Certificate: Certify that products meet or exceed state or local requirements.

1.7 PROJECT RECORD DOCUMENTS

A. Accurately record actual locations of piping mains, valves, connections, and top of pipe elevations.

B. Identify and describe unexpected variations to subsoil conditions and location of uncharted utilities.

1.8 QUALITY ASSURANCE

A. Perform work in accordance with all requirements of the Department of Water Supply, County of Maui.

B. Valves: Manufacturer's name and pressure rating marked on valve body.

PART 2 – PRODUCTS

2.1 COUNTY OF MAUI – DEPARTMENT OF WATER SUPPLY

A. All pipes, fittings, valves, thrust blocks, valve boxes, and other necessary items shall conform to the requirements of the Water System Standards, Department of Water Supply, County of Maui, State of Hawaii, 2002 and current amendments.

2.2 ON-SITE WATER SYSTEM

A. Pipe

i. Pipe sizes 2 inches or less that are installed below grade shall comply with the following as specified on the Drawings:

a. High Density Polyethylene (HDPE) pipe and fittings: Materials used for the polyethylene pipe and fittings shall be made from a PE 3408 high density polyethylene resin compound meeting cell classification 345434C per ASTM D3350; and meeting Type III, Class C, Category 5, Grade P34 per ASTM D1238. HDPE pipes shall comply with AWWA C901. HDPE pipe shall be 160 psi meeting the requirements of Standard Dimension Ratio (SDR) 9 as minimum strength. Dimensions and workmanship shall be as specified by ASTM D3035. HDPE fittings and transitions shall meet ASTM D3261. HDPE pipe shall have a minimum density of 0.955 grams per cubic centimeter. All HDPE pipe and fittings shall have a Hydrostatic Design Basis (HDB) of 1,600 psi. Pipe shall be continually marked (at intervals not exceeding 5-feet) with manufacturer’s name, pipe size, dimension ratio, the letters PE followed by the polyethylene grade in accordance with ASTM D1248, and manufacturing standard reference.

ii. Pipe sizes 4 inches and larger that are installed below grade shall comply with the following as specified on the Drawings:

a. Ductile Iron Water Pipe: Ductile iron pipe shall conform to AWWA C115, C150 and C151. Fittings shall conform to AWWA C110. Joints shall conform to AWWA C111, except all aboveground ductile iron pipe shall have ductile iron flange joints. Flange pipe shall be thickness Class 53. Mechanical joint and push-on joint buried pipe shall be thickness Class 52. All ductile iron pipe shall have a cement-mortar lining conforming to AWWA C104, and 1 mil asphalt factory applied coating conforming to AWWA C151.

B. Gate Valves 4 Inches and Larger

i. ANSI/AWWA C509, Iron body, bronze mounted double disc, parallel seat type, non-rising stem with square nut, single wedge, resilient seat, flanged or mechanical joint ends, control rod, extension box and valve key.

C. Ball Valves 2 Inches and Smaller

i. Brass body, teflon coated brass ball, rubber seats and stem seals, Tee stem pre-drilled for control rod, AWWA compression inlet end, compression outlet with electrical ground connector, with control rod, extension box and valve key.

D. HDPE Fittings

i. All molded fittings and fabricated fittings shall be fully pressure rated to match the pipe SDR pressing rating. All fittings shall be molded or fabricated by the manufacturer.

ii. All fittings shall be installed using butt-fused fittings, thermos-fused fittings/couplings, or flanged adapters and must be approved by the Owner's Representative and Engineer.

iii. All transition from HDPE pipe to ductile iron or PVC shall be made per the approval of the Owner's Representative and Engineer and per the HDPE pipe manufacturer's recommendations and specifications. A molded flange connector adapter within a carbon steel back-up ring assembly shall be used for pipe type transitions.

E. Backflow Preventor shall be reduced-pressure principle conforming to ANSI/AWWA C511 and requirements of the Department of Water Supply.

F. Accessories

i. Concrete for Thrust Blocks: Place thrust blocking consisting of 2,500 psi concrete to provide sufficient bearing area to transmit unbalanced thrust from bends, tees, caps, or plugs to undisturbed soil without loading undisturbed soil in excess of 2,500 lbs/sq ft when water main pressure is 100 psi.

MINIMUM THRUST BLOCKING BEARING AREAS

Pipe Diameter	Tees Sq. Ft.	90° Bend Sq. Ft.	45° Bend Sq. Ft.	22½° Bend Sq. Ft.	11¼° Bend Sq. Ft.
4"	1.0	1.0	1.0	1.0	1.0
6"	1.5	2.0	1.0	1.0	1.0
8"	2.5	3.5	1.8	1.0	1.0
10"	4.0	5.5	2.8	1.5	1.0
12"	6.0	8.0	4.0	2.0	1.5
14"	8.0	11.0	5.5	3.0	2.0
16"	10.0	14.2	7.0	4.0	3.0
18"	21.0	21.0	12.0	6.0	4.0

- Larger blocks shall be used where soil conditions so indicate.

ii. Detectable warning tape for HDPE water line shall be polyethylene plastic tape, 75 mm minimum width, blue-colored with the printed words, "Water Systems".

Minimum thickness of the tape shall be 0.10 mm. Tape shall have a minimum strength of 1,500 psi lengthwise and 1,200 psi crosswise. Tape shall be manufactured with integral wires, foil backing, or other means of enabling detection by a metal detector when tape is buried up to 0.90 m deep. Encase metallic element of the tape in a protective jacket or provide with other means of corrosion protection.

G. Meters and Boxes

i. Meter boxes shall be Department of Water Supply, County of Maui standard for the meters required.

PART 3 – EXECUTION

3.1 EXAMINATION

A. Verify existing conditions.

B. Verify that water main size, location and depth are as indicated.

3.2 COUNTY OF MAUI – DEPARTMENT OF WATER SUPPLY

A. Construction of all water lines must conform to the requirements of the County of Maui, Department of Water Supply.

3.3 WATER SYSTEMS

A. Preparation

i. Ream pipe and tube ends and remove burrs

ii. Remove scale and dirt, on inside and outside, before assembly.

iii. Prepare pipe for connections to equipment with flanges and unions.

B. Bedding: Excavate pipe trench and place bedding material in accordance with Section 02222 for work of this Section.

C. Installation – Pipe and Fittings

i. Maintain separation of water main from sanitary and storm sewer piping in accordance with Department of Water Supply requirements.

ii. HDPE Pipe: The pipe shall be joined with butt, heat fusion joints as outlined in ASTM D2657 and conform to the Generic Butt Fusion Joining Procedure for Field Joining of Polyethylene Pipe, Technical Report TR-33/2005, published by the Plastic Pipe Institute (PPI). A factory qualified joining technician as designated by pipe manufacturer or experienced, trained technician shall perform all heat

fusion joints in the presence of the Owner's Representative. The polyethylene flange adapters at pipe material transitions shall be backed up by stainless steel flanges conforming to ANSI B16.1 and shaped as necessary to suit the outside dimensions of the pipe.

iii. Ductile Iron Pipe: Install pipe and fittings in accordance with ANSI/AWWA C600. Provide polyethylene encasement conforming to AWWA C-105 on ductile iron pipe and iron body valves.

iv. Install pipe to allow for expansion and contraction without stressing pipe or joints or as specified by pipe manufacturer.

v. Install access fittings in accordance with local codes to permit disinfection of water system performed under this Section.

vi. Form and place concrete for thrust blocks. Restraining glands are not allowed.

vii. Establish elevations of buried piping in accordance with Section 02222 for work in this Section.

viii. Backfill trench in accordance with Section 02222.

D. Installation – Valves

i. Install gate valves as indicated on Drawings and supported on concrete pads with valve stem vertical and plumb. Install valve boxes in a manner that will not transmit loads, stress, or shock to valve body. Center valve box over operating nut of valve vertical and plumb. Securely fit valve box together leaving cover flush with finished surface.

E. Disinfection of Domestic Water Piping System

i. Disinfect distribution system with chlorine before acceptance for domestic operation. Amount of chlorine shall be such as to provide dosage of not less than 50 parts/million. Thoroughly flush lines before introduction of chlorinating materials and after contact period of not less than 24 hours, system shall be flushed with clean water until residual chlorine content is not greater than 1.0 part/million. Open and close valves in lines being disinfected several times during contact period. After disinfection, take water sample and bacteriologically test in accordance with AWWA specifications. Submit test results to the Department of Water Supply. Do not place distribution system in service until approval is obtained from applicable governing authorities. Test results shall be submitted to the Owner's Representative and the Engineer.

ii. Dispose of treated water in accordance with NPDES requirements per State Department of Health.

F. Field Quality Control

i. Compaction testing of trench backfill shall be performed in accordance with Section 02222.

ii. Water distribution system pipe installed below grade and outside building shall be tested in accordance with following procedures:

a. The Contractor shall perform the testing of pipe materials, joints, and/or other materials incorporated into the construction of water mains to determine leakage and watertightness. All pressure pipeline shall be tested in accordance with Section 4 of AWWA C600-82. In the event any state or local code requires a more stringent test, the more stringent shall apply.

b. Pressure Test: After the pipe has been laid, all newly laid pipe or any valved section thereof shall be subjected to a hydrostatic pressure of at least 1.5 times the working pressure at the point of testing and not less than 1.25 times the working pressure at the highest point along the test section.

c. Leakage Test: The leakage test shall be conducted concurrently with the pressure test. Leakage is defined as the quantity of water that must be supplied into the newly laid pipeline, or any valved section thereof, to maintain pressure within 5 psi of the specified test pressure after the air in the pipeline has been expelled and the pipeline has been filled with water. Leakage shall not be measured by a drop in pressure in a test section over a period of time. No pipeline installation will be accepted if the leakage is greater than that determined by the following formula:

$$L = \frac{SDP}{133200}$$

L = allowable leakage, (gallons per hour)
S = length of pipe tested, (feet)
D = nominal diameter of pipe, (inches)
P = average test pressure during test, (psig)

d. Visible Leakage: All visible leaks shall be repaired regardless of the amount of leakage.

e. Acceptance of Installation: If any test of pipe laid in place discloses leakage greater than that specified, the Contractor shall, at his own expense, locate the leak and make repairs as necessary until the leakage is within the specified allowance. Contractor shall supply all water for testing at no expense to the Owner.

f. Contractor shall furnish one copy of results of hydrostatic pressure test to the Owner or Owner's Representative and utility company upon completion of water distribution backfilling operations.

END SECTION

SECTION 02730 – SANITARY SEWER SYSTEM

PART 1 – GENERAL

1.1 SUMMARY

A. General Requirements: Furnish all labor, material, equipment and services necessary to install sewer system, as indicated on the plans and specified herein.

1.2 RELATED DOCUMENTS

A. Drawings and general provisions of the Contract, including General and Supplementary Conditions and Division 1 Specification Sections, apply to this section.

1.3 SECTION INCLUDES

A. Furnish labor, materials, services, equipment, and other necessary items required for accomplishing the construction of the sanitary sewer system. This shall include, but not be limited to, the following:

i. Sanitary sewer piping, fittings and accessories, cleanouts, bedding, and testing.

ii. Set lines, elevations, and grades for sanitary sewer system work and control system for duration of work, including careful maintenance of benchmarks, property corners, monuments, or other reference points.

1.4 RELATED WORK

A. Section 02222 – Excavation, Backfilling and Compacting for Utilities

B. Section 02227 – Aggregate Materials

C. Section 02605 – Sewer Manholes

D. Construction Drawings

E. Standard Details for Public Works Construction, County of Maui, September 1984, and all subsequent amendments and additions referred to as “County Standard Details.”

F. Hawaii Standard Specifications for Road, Bridge and Public Works Construction, State of Hawaii, Department of Transportation, Highways Division, 2005 and current amendments (Paragraphs on Measurement and Payment do not apply to this project).

1.5 REFERENCES

A. ANSI/ASTM D3034 – Type PSM Polyvinyl Chloride (PVC) Sewer Pipe and Fittings

B. ASTM D1785 – Polyvinyl Chloride (PVC) Plastic Pipe, Schedules 40, 80, and 120

C. ANSI/AWWA C900 – Standard for Polyvinyl Chloride (PVC) Pressure Pipe, 4 inch through 12 inch for Water

D. ANSI/AWWA C104 – Cement-Mortar Lining for Ductile-Iron Pipe and Fittings for Water

E. ANSI/AWWA C105 – Polyethylene Encasement for Ductile Iron Piping for Water and Other liquids

F. ANSI/AWWA C110 – Ductline-Iron Gray Iron Fittings, 3 inch through 48 inch, for Water and Other Liquids

G. ANSI/AWWA C111 – Rubber-Gasket Joints for Ductile Iron and Grey-Iron Pressure Pipe and Fittings

H. ANSI/AWWA C151 – Ductile-Iron Pipe, Centrifugally Cast in Metal Molds or Sand-Lined Molds, for Water or Other Liquids

1.6 DEFINITIONS

A. Bedding: Fill placed under, beside and directly over pipe, prior to subsequent backfill operations.

1.7 SUBMITTALS

A. Product Data: Provide catalog materials indicating pipe, pipe accessories and fittings, including materials for detectable warning tape and root barrier.

B. Manufacturer's Installation Instructions: Indicate special procedures required to install Products specified.

C. Manufacturer's Certificate: Certify that products meet or exceed ASTM designations.

PART 2 – PRODUCTS

2.1 SEWER PIPE MATERIALS

A. Polyvinyl Chloride Gravity Sewer

i. Pipe and fittings shall comply with ASTM D3034, rated SDR 26 unless otherwise specified by the local utility. Pipe shall be continually marked with manufacturer's name, pipe size, cell classification, SDR rating, and ASTM D3034 classification.

ii. Pipe joints shall be integrally molded bell ends per ASTM D3034, Table 2, with factory supplied elastomeric gaskets and lubricant.

2.2 PIPE ACCESSORIES

A. PVC Pipe joints and fittings for gravity sewer shall conform to the requirements of Section 625 – SEWER SYSTEM of the Hawaii Standard Specifications.

B. Detectable warning tape for PVC sewer main shall be polyethylene plastic tape, 75 mm minimum width, green-colored with the printed words, “Sewer Systems”. Minimum thickness of the tape shall be 0.10 mm. Tape shall have a minimum strength of 1,500 psi lengthwise and 1,200 psi crosswise. Tape shall be manufactured with integral wires, foil backing, or other means of enabling detection by a metal detector when tape is buried up to 0.90 m deep. Encase metallic element of the tape in a protective jacket or provide with other means of corrosion protection.

2.3 CLEANOUTS

A. Lid and Frame: Heavy-Duty cast iron construction, manufactured by Mueller Lid Design: Closed Lid for heavy traffic and landscape areas. Brass countersunk cleanout plug for pedestrian walkway areas.

B. Shaft Construction: Cast Iron shaft of internal diameter as specified on plans with 2500 psi concrete collar for cleanouts.

2.4 STRUCTURES

A. Conform to the Standard Details and to the Hawaii Standard Specifications for Roads, Bridge and Public Works Construction, 2005 and current amendments.

PART 3 – EXECUTION

3.1 EXAMINATION

A. Verify that trench cut and excavation is ready to receive work and excavations, dimensions, and elevations are as indicated on drawings.

3.2 CONSTRUCTION

A. Trench excavation and backfill shall be in accordance with Section 02222 for work in this section.

B. Gravity sewer pipe installation and testing shall be in accordance with Section 625 – SEWER SYSTEM of the Hawaii Standard Specifications.

C. Refer to Section 02536 for manhole requirements.

D. In areas where tree trunks are within 7-1/2 feet of the sewer main, root barrier shall be placed along the edge of the excavated trench for the sewer main to protect the sewer main from root damage. Installation shall be in accordance with the manufacturer’s instructions.

E. Detectable warning tracer tape shall be installed over each sewer main pipe, as shown on the drawings. Installation shall be in accordance with the manufacturer's instructions.

3.3 INSTALLATION – CLEANOUTS

A. Form bottom of excavation clean and smooth to correct elevation.

B. Form and place cast-in-place concrete base pad, with provision for sanitary sewer pipe to be installed to proper elevations.

3.4 FIELD QUALITY CONTROL

A. Compaction testing will be performed in accordance with ANSI/ASTM D698, ASTM D2922 or ASTM D3017.

B. Test sanitary sewer pipe system installed below grade and outside building in accordance with the following procedures:

i. The Contractor shall perform the testing of manhole construction, pipe materials, joints and/or other materials incorporated into the construction of the sanitary sewer system to determine leakage and watertightness. In the event any state or local code requires a more stringent test, the more stringent shall apply.

ii. Manhole Testing: All incoming and outgoing sewer lines shall be plugged and the manhole filled with water up to the top of the poured concrete or above the highest precast barrel joint. If the water loss exceeds the maximum allowable as follows; the manhole shall have failed the test.

Depth of Manhole	Maximum Allowable Water Loss
0-8 feet	1 inch over 5 minutes
greater than 8 feet	1/8 gallon per vertical foot over 5 minutes

iii. Flexible Pipe Deflection Testing: Refer to Section 625 – SEWER SYSTEM of the Hawaii Standard Specifications.

iv. Air Testing of Gravity Sewers: Refer to Section 625 – SEWER SYSTEM of the Hawaii Standard Specifications.

v. Acceptance of Installation: No gravity sewer or manhole will be accepted that does not comply with the minimum requirements of tests described in this specification.

vi. Test Equipment: All necessary equipment to perform the air test in accordance with this specification shall be provided by the contractor. The test gauge shall preferably have incremental division of 0.10 psi and have an accuracy of at least plus or minus 0.04 psi. In no case shall a test gauge be used which has incremental divisions of greater than 0.25 psi. The gauge shall be of sufficient size in order to determine this accuracy.

vii. Contractor shall furnish one copy of gravity sewer and manhole test results to the Owner or Owner's Representative upon completion of sewer system backfilling operations.

C. Additional field testing indicated in the drawing construction notes, including inspection by closed circuit television (CCTV). Contractor shall furnish one (1) copy of video and CCTV log results to Owner.

END SECTION

SECTION 02830 – CHAIN-LINK FENCE AND GATES

PART 1 - GENERAL

1.1 SUMMARY

A. General Requirements: Furnish all labor, material, equipment and services necessary to install chain-link fences and gates, as indicated on the plans and specified herein.

1.2 RELATED DOCUMENTS

A. Drawings and general provisions of the Contract, including General and Supplementary Conditions and Division 1 Specification Sections, apply to this section.

1.3 SECTION INCLUDES

A. Provide galvanized steel fence and gate with PVC-coated chain link fabrics, in place, complete.

1.4 SUBMITTALS

A. Submit complete, dimensioned shop drawings showing corner post sizes, post sizes, fabric height, gate details, diagonal bracing and protection from concrete contact.

B. Submit manufacturer's certification that materials have been treated as specified herein.

1.5 REFERENCES

A. Work shall conform to Section 607 of the Standard Specifications for Roads and Bridge Construction, State of Hawaii, Department of Transportation, Highways Division, 2005 and current amendments. (Paragraphs on Measurement and Payment do not apply to this project.)

PART 2 – PRODUCTS

2.1 MATERIALS FOR CHAIN LINK FENCE AND GATES

All materials shall be of galvanized steel.

A. Posts, top rails and gate frames shall be Schedule 40 pipe. Fabric shall be 6-foot high, 2-inch by 2-inch, 9 gage, galvanized steel chain link fabric with one knuckled selvage and one twisted selvage. Fabric shall have a 20 mil thick extruded green PVC coating, for additional corrosion resistance.

B. Gate post and rail sizes shall be as indicated on drawings.

C. Concrete strength shall be 2,500 psi.

D. Coating for post bases shall be paste consistency asphalt mastic.

E. Gates shall have drop rod locking devices for single gates, drop rod devices for double swing gates, and chain links for rolling gates. Chains shall be Type 316 stainless steel, 1/4 inch diameter links, welded. Provisions for securing with padlock shall be included.

2.2 MATERIALS FOR PIPE GATES

A. Posts, top rails and gate frames shall be Schedule 40 aluminum pipe.

B. Gate post and rail sizes shall be as indicated on drawings.

C. Concrete strength shall be 2,500 psi.

D. Coating for post bases shall be paste consistency asphalt mastic.

E. Gates shall have provisions for securing with padlocks as detailed on drawings.

PART 3 – EXECUTION

3.1 INSTALLATION

A. Gates and frames shall be assembled by welding.

B. Gate height and width, and fence height shall be as indicated on the drawings.

C. Erect fabric and clear the line in such a manner that fabric is not more than 2 inches from the ground surface. Top of fabric shall be knuckled.

D. Deliver 24 spare bolts and 24 spare nuts to the Owner's Representative in a substantial, labeled container.

END SECTION

SECTION 02890 – TRAFFIC SIGNAGE

PART 1 – GENERAL

1.1 SUMMARY

A. General Requirements: Furnish all labor, material, equipment and services necessary to construct the traffic control signs as indicated on the Drawings and specified herein in place and complete.

1.2 RELATED DOCUMENTS

A. Drawings and general provisions of the Contract, including General and Supplementary Conditions and Division 1 Specification Sections, apply to this section.

1.3 SECTION INCLUDES

A. Traffic Control Signs

1.4 RELATED WORK

A. Section 02584 Pavement Markings

B. Construction Drawings

C. Hawaii Standard Specifications for Road, Bridge, and Public Works Construction, State of Hawaii, Department of Transportation, Highways Divison, 2005 and as amended (Paragraphs on Measurement and Payment do not apply to this project.)

1.5 REFERENCES

A. American Standard for Testing Materials (ASTM)

i. ASTM C94 – Ready Mix Concrete.

B. US Department of Transportation, Federal Highway Administration

i. Manual on Uniform Traffic Control Devices (MUTCD), 2009 edition.

PART 2 – PRODUCTS

2.1 SIGNS

A. Reflective sheeting shall be of one piece for each sign. Conform to MUTCD classifications as applicable. All signs within County rights-of-way shall be made of Type IV high intensity prismatic retro-reflective sheeting materials.

2.2 POSTS

A. Posts to be as indicated on the Construction Drawings. Mounting hardware (bolts, nuts and washers) shall be stainless steel.

2.3 CONCRETE

A. Mix concrete and deliver in accordance with ASTM C94.

B. Design mix to produce normal weight concrete consisting of Portland cement, aggregate, water-reducing admixture, air-entraining admixture, and water to produce following:

i. Compressive Strength: 2,500 psi minimum at 28 days, unless otherwise indicated on Construction drawings.

ii. Slump Range: 1 to 3-inches at time of placement

iii. Air Entrainment: 5 to 8 percent

PART 3 – EXECUTION

3.1 PREPARATION

A. Contractor shall field verify underground utilities prior to sign installation. Primary utilities of concern of shallow depths are lawn sprinkler systems, electric, telephone, fiber optic, cable and gas.

B. Cost related to repair of damaged surface and subsurface facilities shall be paid for by the Contractor at no additional expense to the Owner.

3.2 INSTALLATION

A. Install posts in 18 inch diameter x 24 inch deep concrete foundations. Set posts vertical and plumb with bottom of sign at minimum 7'-0" above finish grade unless otherwise indicated on the Construction Drawings. Mount signs in accordance with manufacturer's instructions.

B. Install signage concrete foundations concurrently with electrical infrastructure installations.

END SECTION

SECTION 03100 – CONCRETE FORMWORK

PART 1 – GENERAL

1.1 SUMMARY

A. This section includes formwork for cast-in-place concrete, with shoring, bracing and anchorage; openings for other work; form accessories; and form stripping.

1.2 REFERENCES

A. The publications listed below form a part of this specification to the extent referenced. The publications are referred to in the text by the basic designation

B. American Concrete Institute (ACI)

i. ACI 301-99 Structural Concrete for Buildings

ii. ACI 318-02 Building Code Requirements for Reinforced Concrete

iii. ACI 347R-01 Recommended Practice for Concrete Formwork

C. U.S. Department of Commerce Voluntary Product Standard

i. PS 1 Construction and Industrial Plywood

1.3 DESIGN REQUIREMENTS

A. Design, engineer and construct formwork, shoring and bracing to conform to code requirements; resultant concrete to conform to required shape, line and dimension.

1.4 QUALITY ASSURANCE

A. Perform work in accordance with ACI 347.

1.5 REGULATORY REQUIREMENTS

A. Conform to applicable codes for design, fabrication, erection and removal of formwork.

1.6 COORDINATION

A. Coordinate this section with other sections of work which require attachment of components to formwork.

PART 2 – PRODUCTS

2.1 EXPOSED FINISHED CONCRETE

A. Use plywood, metal or acceptable panel-type materials, to provide continuous, straight, smooth, exposed surfaces. Use largest practicable sized to minimize number of joints and to conform to joint systems indicated on drawings, with sufficient thickness to withstand pressure of wet concrete without deflection.

2.2 UNEXPOSED FINISH CONCRETE

A. Use plywood, lumber metal, or other acceptable material. If lumber is used, it must be dresses on at least 2 edges and 1 side for a tight fit.

2.3 FORMWORK ACCESSORIES

A. Form Ties: Snap-off type, galvanized metal, fixed or adjustable length, free of defects that could leave holes larger than 1 inch in concrete surface.

B. Form Release Agent: Colorless mineral oil which will not stain concrete, or absorb moisture, or impair natural bonding or color characteristics of coating intended for use on concrete.

C. Corners: Fillet, chamfer, rigid plastic or wood strip.

D. Nails, Spikes, Lag Bolts, Through Bolts, and Anchorages: Sized as required, of sufficient strength and character to maintain formwork in place while placing concrete.

PART 3 – EXECUTION

3.1 EXAMINATION

A. Verify lines, levels and centers before proceeding with formwork. Ensure that dimensions agree with drawings.

3.2 ERECTION - FORMWORK

A. Forms for exposed surfaces shall be new unless they are parched in such a way that a smooth surface results. The joint pattern of forms shall be approved by the Owner's Representative and Engineer prior to placement of reinforcing steel. Erect formwork, shoring and bracing to achieve design requirements, in accordance with requirements of ACI 301.

B. All forms shall be constructed to proper dimensions, true, rigid, tight, of sufficient strength and braced to prevent spreading or deflection. Align joints and make watertight. Keep form joints to a minimum. Forms shall remain in position until concrete has attained a permanent set. Clean all forms and have all reinforcing steel wired securely in place before pouring concrete.

C. All debris, dirt, etc., shall be removed from forms, and they shall be wetted prior to placement of concrete. Contractor shall not permit puddles of water to be in bottom of forms or excavations at the time of pouring concrete. No wood is permitted inside of forms except nailing blocks.

D. Forms for foundations shall be omitted when the soil and workmanship permit accurate excavation size. Contractor shall make every effort not to use side forms for footing.

3.3 APPLICATION - FORM RELEASE AGENT

A. Apply form release agent on formwork in accordance with manufacturer's recommendations.

B. Apply prior to placement of reinforcing steel, anchoring devices, and embedded items.

C. Do not apply form release agent where it is not compatible with special finishes or coverings to be applied to concrete surfaces. Form release agent shall be compatible with the type of finish selected. Soak inside surfaces of untreated forms with clean water. Keep surfaces coated prior to placement of concrete.

3.4 INSERTS, EMBEDDED PARTS AND OPENINGS

A. Provide formed openings where required for items to be embedded in passing through concrete work.

B. Locate and set in place items that will be cast directly into concrete.

C. Coordinate with work of other sections in forming and placing openings, slots, reglets, recesses, sleeves, bolts, anchors, other inserts, and components of other work.

D. Install accessories in accordance with manufacturer's instructions, straight, level and plumb. Ensure items are not disturbed during concrete placement.

E. Install waterstops continuous without displacing reinforcement. Heat seal joints watertight. Provide additional waterstop supports where indicated.

F. Provide temporary ports or openings in formwork where required to facilitate cleaning and inspection. Locate openings at bottom of forms to allow flushing water to drain.

G. Close temporary openings with tight-fitting panels, flush with inside face of forms, and neatly fitted so joints will not be apparent in exposed concrete surfaces.

3.5 FORM CLEANING

A. Clean forms as erection proceeds, to remove foreign matter within forms.

B. Clean formed cavities of debris prior to placing concrete.

C. Flush with water or use compressed air to remove remaining foreign matter. Ensure that water and debris drain to exterior through clean-out ports.

3.6 FORMWORK TOLERANCES

A. Construct formwork to maintain tolerances required by ACI 301.

3.7 FIELD QUALITY CONTROL

A. Inspect erected formwork, shoring and bracing to ensure that work is in accordance with formwork design, and that supports, fastenings, wedges, ties and items are secure.

3.8 FORMS REMOVAL

A. All forms shall be carefully removed. Nails and tie wires shall be cut flush with the face of concrete, and all surfaces left smooth and clean. No debris of any description will be allowed to remain in, under, or around concrete.

B. Forms shall not be removed before the minimum lapsed time from concrete pour as follows:

Footing side form, if needed	24 hours
Forms for thickened	72 hours

C. Form and shore removal for load supporting structural elements will not be permitted until 7-day cylinder tests confirm that concrete is sufficiently strong to support its own weight and any construction live loads.

D. Restoring will not be permitted unless approved by Owner's Representative.

END SECTION

SECTION 03200 – CONCRETE REINFORCEMENT

PART 1 – GENERAL

1.1 SUMMARY

A. This section includes reinforcing steel bars, wire fabric and accessories for cast-in-place concerete.

1.2 REFERENCES

A. The publications listed below form a part of this specification to the extent referenced. The publications are referred to in the text by the basic designation only.

B. American Concrete Institute (ACI)

1. ACI 301-99 Specifications for Structural Concrete
2. ACI 315-99 American Concrete Institute – Detailing Manual
3. ACI 318-14 Building Code Requirements for Reinforced Concrete

C. American Society for Testing and Materials (ASTM)

1. ASTM A82-94 Cold Drawn Steel Wire for Concrete Reinforcement
2. ASTM A615-94 Deformed and Plain Billet Steel Bars for Concrete Reinforcement

D. Uniform Building Code (UBC), 1997 Edition.

1.3 SUBMITTALS

A. Submit shop drawings for approval. Shop drawings for reinforcement shall conform to ACI 315, and shall indicate bending diagrams, assembly diagrams, supporting devices, bar dimensions, details, laps and splices. Drawings shall be numbered and dated with each issue. Changes on re-submittals shall be identified with a cloud and a revision number.

B. Manufacturer's Certificate: Certify that products meet or exceed specified requirements.

C. Review of shop drawings will be for adherence to overall basic design, and will not relieve Contractor from compliance with Contract Documents nor from his responsibility for correctness of dimensions, proper design of details, quantities, field fit and coordination with other trades.

1.4 QUALITY ASSURANCE

A. Perform work in accordance with ACI 301 and ACI 315.

B. Owner's Representative reserves the right to request and review test reports and other data demonstrating compliance with specifications.

C. Submit certified copies of mill test report of reinforcement materials analysis.

D. When reinforcing steel does not bear stamped identification, the Owner's Representative shall require certified copies of mill reports for the first delivery of reinforcing steel, and for each 15 tons thereafter.

PART 2 – PRODUCTS

2.1 MATERIALS

A. Reinforcing steel shall be deformed billet bars conforming to ASTM A615, Grade 60. All roof slab shall be epoxy coated. Epoxy coating shall conform to ASTM A775. Provide "Scotchkite-413" epoxy coating as manufactured by 3M Company or approved equal.

B. Wire for concrete reinforcement shall conform to ASTM A82.

C. Welded wire fabric shall conform to ASTM A185 galvanized. All wire fabrics shall be delivered in flat sheets and not rolls.

D. Metal accessories such as spacers, chairs, ties, and other devices necessary for properly placing, supporting, and fastening reinforcement in place shall be provided. Tie wires shall be minimum 16 gage annealed type. Chairs, bolsters, bar supports and spacers shall be heavily galvanized, plastic coated and sized and shaped for strength and support of reinforcement during concrete placement conditions including load bearing pad on bottom to prevent vapor barrier puncture.

PART 3 – EXECUTION

3.1 PLACEMENT

A. Reinforcing shall be thoroughly cleaned of loose mill scale, rust, oil and all coatings that will destroy or reduce the bond before placing and again before pouring of concrete. All items shall be accurately positioned and secured in place by plastic chairs and spacers. So not use any metal chairs for roof slab.

i. Unless otherwise noted, cleaning, bending, and placing reinforcement shall be done in accordance with the standard practice of the Concrete Reinforcing Steel Institute.

B. Bars shall be bent cold to the shapes shown on the drawings. Bends shall be made around a pin having a diameter not less than 6 times the bar diameter except that for bars of larger than #8, the pin diameter shall be 8 times the bar diameter.

C. Splicing of bars, except where shown, will not be permitted without the approval of the Engineer. Splices where permitted shall be staggered as far as possible, wired together in such a manner as to maintain a clearance of not less than the minimum

clear distance to other bars or to the surface of concrete and shall be lapped in lengths as specified on the plans.

D. Forms for foundations shall be omitted when the soil and workmanship permit accurate excavation size. Contractor shall make every effort not to use side forms for footing.

E. All reinforcement shall be observed by the Owner's Representative before placing any concrete. This observation, however, shall not be construed to relieve the Contractor of his responsibility to place all reinforcement in accordance with the contract drawings.

F. It is absolutely critical that minimum distances from forms and earth be maintained.

Concrete cover to reinforcing steel shall be as follows:

Poured against the earth	3"
Exposed to earth, but poured against forms	2"
Slabs on grade	2"
Walkway slab (wire mesh)	2"

END SECTION

DIVISION 3 – CONCRETE

SECTION 03300 – CAST-IN-PLACE CONCRETE

PART 1 – GENERAL

1.1 SUMMARY

A. Section includes cast-in-place concrete, including formwork, reinforcement, concrete materials, mix design, placement procedures, and finishes.

1.2 DEFINITIONS

A. Cementitious Materials: Portland cement alone or in combination with one or more of blended hydraulic cement, fly ash and other pozzolans, ground granulated blast-furnace slag, and silica fume.

1.3 SUBMITTALS

A. Submit in accordance with SECTION 01330 – SUBMITTAL PROCEDURES.

B. Product Data:

1. Reinforcing steel - Certified mill test results or laboratory test results. Indicate bar size, yield strength, ultimate tensile strength, elongation and bend test. Provide chemical composition for rebars that are to be welded.

C. Design Mixes: For each concrete mix. Include alternate mix designs when characteristics of materials, project conditions, weather, test results, or other circumstances warrant adjustments.

1. Indicate amounts of mix water to be withheld for later addition at Project site.

D. Steel Reinforcement Shop Drawings: Details of fabrication, bending, and placement, prepared according to ACI 315, “Details and Detailing of Concrete Reinforcement.” Include material, grade, bar schedules, stirrup spacing, bent bar diagrams, arrangement, and supports of concrete reinforcement. Include special reinforcement required for openings through concrete structures.

E. Formwork Shop Drawings: Prepared by or under the supervision of a qualified licensed professional engineer detailing fabrication, assembly, and support of formwork. Design and engineering of formwork are Contractor’s responsibility.

1. Shoring and Reshoring: Indicate proposed schedule and sequence of stripping formwork, shoring removal, reshoring, and final removal of shoring.

F. Welding Certificates: Copies of certificates for welding procedures and personnel.

G. Material Test Reports: From a qualified testing agency indicating and interpreting test

results for compliance with the requirements indicated, based on comprehensive testing of current materials.

H. Material Certificates: Signed by manufacturers certifying that each of the following items complies with requirements:

1. Form materials and form-release agents.

2. Steel reinforcement and reinforcement accessories.

3. Curing materials.

4. Floor and slab treatments.

5. Bonding agents.

6. Adhesives.

7. Vapor barrier.

8. Expansion Joint-filler.

9. Joint sealing compound.

10. Repair materials.

I. Minutes of pre-installation conference.

J. Schedule for project installation.

1.4 QUALITY ASSURANCE

A. Professional Engineer Qualifications: A professional engineer who is legally qualified to practice in jurisdiction where Project is located and who is experienced in providing engineering services of the kind indicated. Engineering services are defined as those performed for formwork and shoring and reshoring installations that are similar to those indicated for this Project in material, design, and extent.

B. Manufacturer Qualifications: A firm experienced in manufacturing ready-mixed concrete products complying with ASTM C 94 requirements for production facilities and equipment.

C. Testing Agency Qualifications: An independent testing agency, acceptable to authorities having jurisdiction, qualified according to ASTM C 1077 and ASTM E 329 to conduct the testing indicated, as documented according to ASTM E 548.

1. Personnel conducting field tests shall be qualified as ACI Concrete Field Testing Technician, Grade 1, according to ACI CP-1 or an equivalent certification program.

D. Source Limitations: Obtain each type or class of cementitious material of the same brand from the same manufacturer's plant, each aggregate from one source, and each admixture from the same manufacturer.

E. Welding: Qualify procedures and personnel according to AWS D1.4, “Structural Welding Code--Reinforcing Steel.”

F. ACI Publications: Comply with the following, unless more stringent provisions are indicated and maintain a copy at the field office.

1. ACI 301, “Specification for Structural Concrete.”

2. ACI 117, “Specifications for Tolerances for Concrete Construction and Materials.”

3. ACI 347R “Guide to Formwork for Concrete.”

G. Mockups: Cast concrete slabs-on-grade mockup to demonstrate typical joints, surface finish, texture, tolerances, and standard of workmanship.

1. Build mockups approximately 200 sq. ft. in the location indicated or, if not indicated, as directed by Engineer.

2. Notify Contracting Officer seven days in advance of dates and times when mockups will be constructed.

3. Obtain Contracting Officer’s approval of mockups before starting construction.

4. If Contracting Officer determines that mockups do not meet requirements, demolish and remove them from the site and cast another until the mockup is approved.

5. Maintain mockups during construction in an undisturbed condition as a standard for judging the completed Work.

6. Demolish and remove mockups when directed.

7. Approved mockups may become part of the completed Work if undisturbed at time of Substantial Completion.

H. Pre-installation Conference: Unless waived by the Contracting Officer, conduct conference at Project site to comply with requirements in SECTION 01310 - PROJECT MANAGEMENT AND COORDINATION.

1. Before submitting design mixes, review concrete mix design and examine procedures for ensuring quality of concrete materials. Require representatives of each entity directly concerned with cast-in-place concrete to attend along with the Contracting Officer, including the following:

a. Contractor's superintendent.

b. Ready-mix concrete producer.

c. Concrete subcontractor.

2. Agenda to include review of joint locations.

1.5 SPECIAL INSPECTION AND TESTING

A. Structural special inspections shall be provided by a certified third party special inspector hired and paid for by the Contractor and shall conform to 2012 International Building Code Chapter 17 provisions. Contractor shall notify structural engineer at least 72 hours in advanced for work requiring special inspection.

B. All testing shall be conducted by an independent, certified third party testing laboratory approved by the Contracting Officer and paid for by the Contractor. Contractor shall notify Special Inspector and testing agency at least 72 hours in advance for work to be performed. See Section 3.18 Field Quality Control for additional concrete testing information.

1.6 DELIVERY, STORAGE, AND HANDLING

A. Deliver, store, and handle steel reinforcement to prevent bending and damage.

PART 2 – PRODUCTS

2.1 FORM-FACING MATERIALS

A. Smooth-Formed Finished Concrete: Comply with ACI 347R. Provide new or good finish form-facing panels that will provide continuous, true, and smooth concrete surfaces. Furnish in largest practicable sizes to minimize number of joints.

1. Plywood, metal, or other ACI 347R approved panel materials.

2. Exterior-grade plywood panels, suitable for concrete forms, complying with DOC PS 1, and as follows:

a. Medium-density overlay, Class 1, or better, mill-release agent treated and edge sealed.

B. Rough-Formed Finished Concrete: Plywood, lumber, metal, or another approved material. Provide lumber dressed on at least two edges and one side for tight fit.

C. Void Forms: Biodegradable paper surface, treated for moisture resistance, structurally sufficient to support weight of plastic concrete and other superimposed loads.

D. Chamfer Strips: Wood, metal, PVC, or rubber strips, 3/4 by 3/4 inch, minimum.

E. Form-Release Agent: Commercially formulated form-release agent that will not bond with, stain, or adversely affect concrete surfaces and will not impair subsequent treatments of concrete surfaces. Form oils or waxes shall not be used for concrete surfaces intended to be painted.

1. Formulate form-release agent with rust inhibitor for steel form-facing materials.

F. Form Ties: Factory-fabricated, removable or snap-off metal or glass-fiber-reinforced plastic form ties designed to resist lateral pressure of fresh concrete on forms and to prevent spalling of concrete on removal.

1. Furnish units that will leave no corrodible metal closer than 1 inch to the plane of the exposed concrete surface.

2. Furnish ties that, when removed, will leave holes not larger than 1-1/2 inches in diameter in concrete surface.

3. Furnish ties with integral water-barrier plates to walls indicated to receive dampproofing or waterproofing.

2.2 STEEL REINFORCEMENT

A. Reinforcing Bars: ASTM A 615/A 615M, Grade 60, deformed, unless otherwise noted on the drawings.

B. Low-Alloy-Steel Reinforcing Bars: ASTM A 706/A 706M, deformed.

2.3 REINFORCEMENT ACCESSORIES

A. Bar Supports: Bolsters, chairs, spacers, and other devices for spacing, supporting, and fastening reinforcing bars and welded wire fabric in place that will not puncture the vapor retarder. Use plastic straps or brightly colored tie wires to secure reinforcing. Manufacture bar supports according to CRSI's "Manual of Standard Practice" from steel wire, plastic, or precast concrete or fiber-reinforced concrete of greater compressive strength than concrete, and as follows:

1. For concrete surfaces exposed to view where legs of wire bar supports contact forms, use CRSI Class 1 plastic-protected or CRSI Class 2 stainless-steel bar supports. Refer to paragraph 3.06 for chair support spacing.

B. Joint Dowel Bars: Plain-steel bars, ASTM A 615/A 615M, Grade 60. Cut bars true to length with ends square and free of burrs.

2.4 CONCRETE MATERIALS

A. Portland Cement: ASTM C 150, Type I or Type II.

B. Pozzolans

1. Fly Ash: ASTM C 618, Class C or F.

C. Blended Hydraulic Cement: ASTM C 595M; Type IS - portland blast-furnace slag cement, Type IP - portland/pozzolan cement, Type I (PM) - pozzolan-modified portland cement, or Type I (SM) - slag-modified portland cement.

D. Normal-Weight Aggregate: ASTM C 33, uniformly graded, and as follows:

1. Class: Moderate weathering region, but not less than 3M.

2. Aggregate Size: 1-1/2 inches (38 mm).

3. Aggregate Size: No. 57 (1 inch to No. 4).

4. Aggregate Size: No. 67 (3/4 inch to No. 4).

E. Size of Coarse Aggregate: Except when otherwise specified or permitted, maximum size of coarse aggregate shall not exceed three-fourths of the minimum clear spacing between reinforcing bars (or bundled bars), one-fifth of the narrowest dimension between the sides of forms, or one-third of the thickness of slabs or toppings.

F. Water: Potable and complying with ASTM C 94 or non potable meeting ASTM C 94 Acceptance Criteria for Questionable Water Supply. Use only potable water for job site mixing.

2.5 ADMIXTURES

A. General: Admixtures certified by manufacturer to contain not more than 0.1 percent water-soluble chloride ions by mass of cementitious material and to be compatible with other admixtures and cementitious materials. Do not use admixtures containing calcium chloride.

B. Air-Entraining Admixture: ASTM C 260.

C. Water-Reducing Admixture: ASTM C 494, Type A.

D. High-Range, Water-Reducing Admixture: ASTM C 494, Type F.

E. Water-Reducing and Accelerating Admixture: ASTM C 494, Type E.

F. Water-Reducing and Retarding Admixture: ASTM C 494, Type D.

2.6 VAPOR BARRIER

A. Vapor Barrier: ASTM E 1745, Class B except as modified in Subparagraph 1. below, nylon or polyester-cord-reinforced three-ply high-density polyethylene sheet, or one ply extruded polyolefin sheet; 10 mil minimum thickness. Compliance to ASTM

standards shall be confirmed by an independent testing agency.

1. Permeance Rating: ASTM E 96, ASTM E 154 not exceeding 0.035 grains/ft2/hr

2.7 FLOOR AND SLAB TREATMENTS

A. Slip-Resistive Aggregate Finish: Factory-graded, packaged, rustproof, nonglazing, abrasive aggregate of silicon carbide, or fused aluminum-oxide granules or crushed emery with emery aggregate containing not less than 50 percent aluminum oxide and not less than 25 percent ferric oxide; unaffected by moisture, and cleaning materials.

B. Unpigmented Mineral Dry-Shake Floor Hardener: Factory-packaged dry combination of portland cement, graded quartz aggregate, and plasticizing admixture.

C. Pigmented Mineral Dry-Shake Floor Hardener: Factory-packaged dry combination of portland cement, graded quartz aggregate, coloring pigments, and plasticizing admixture. Use coloring pigments that are finely ground, nonfading mineral oxides interground with cement.

1. Colors: Match Project's samples.

2. Colors: As indicated by referencing manufacturer's designations.

3. Colors: As selected by Contracting Officer from manufacturer's full range for these characteristics.

2.8 CURING MATERIALS AND EVAPORATION RETARDERS

A. Evaporation Retarder: Waterborne, monomolecular film forming, manufactured for application to fresh concrete.

B. Absorptive Cover: AASHTO M 182, Class 2, burlap cloth made from jute or kenaf, weighing approximately 9 oz./sq. yd. dry.

C. Moisture-Retaining Cover: ASTM C 171, polyethylene film or white burlap-polyethylene sheet.

D. Water: Potable.

E. Clear, Solvent-Borne, Membrane-Forming Curing Compound: ASTM C 309, Type 1, Class B.

F. Clear, Waterborne, Membrane-Forming Curing Compound: ASTM C 309, Type 1, Class B, 18 to 22 percent solids.

G. Clear, Solvent-Borne, Membrane-Forming Curing and Sealing Compound: ASTM C 1315, Type 1, Class A.

H. Clear, Waterborne, Membrane-Forming Curing and Sealing Compound: ASTM C 1315, Type 1, Class A.

2.9 RELATED MATERIALS

A. Expansion Joint-Filler: A pre-molded material of 1/2 inch thickness, unless otherwise indicated, composed of fiberboard impregnated with asphalt conforming to ASTM D1751.

B. Joint Sealing Compound: A polysulfide or urethane compound conforming to ASTM C920 or other approved equal, compatible with the floor finish to be applied.

C. Bonding Agent: ASTM C 1059, Type II, non-redispersible, acrylic emulsion or styrene butadiene.

D. Epoxy-Bonding Adhesive: ASTM C 881, two-component epoxy resin, capable of humid curing and bonding to damp surfaces, of class and grade to suit requirements, and as follows:

1. Types IV and V, load bearing, for bonding hardened or freshly mixed concrete to hardened concrete.

E. Cementitious Coatings: Cement based polymer modified concrete finishing materials. Available Products subject to compliance with requirements, products that may be incorporated into the Work include, but are not limited to, the following:

1. ProFinish by Bonded Materials

2. Polycoat by Tremcrete Systems Incorporated

3. Durus by Durus High Tech Cement

4. MBT RS-1150 by Master Builders Technologies.

F. Sleeves:

1. Schedule 40 pipe, galvanized per ASTM A53.

2. Schedule 40 PVC Pipe.

G. Reglets: Fabricate reglets of not less than (0.0217-inch) thick galvanized steel sheet. Temporarily fill or cover face opening of reglet to prevent intrusion of concrete or debris.

H. Dovetail Anchor Slots: Hot-dip galvanized steel sheet, not less than (0.0336 inch) thick, with bent tab anchors. Temporarily fill or cover face opening of slots to prevent intrusion of concrete or debris.

2.10 REPAIR MATERIALS

A. Repair Underlayment: Cement-based, polymer-modified, self-leveling product that can be applied in thicknesses from 1/8 inch and that can be feathered at edges to match adjacent floor elevations. Products shall contain no added gypsum.

1. Cement Binder: ASTM C 150, portland cement or hydraulic or blended hydraulic cement as defined in ASTM C 219.

2. Primer: Product of underlayment manufacturer recommended for substrate, conditions, and application.

3. Aggregate: Well-graded, washed gravel, 1/8 to 1/4 inch or coarse sand as recommended by underlayment manufacturer.

4. Compressive Strength: Not less than 4000 psi (27.6 MPa) at 28 days when tested according to ASTM C 109/C 109M.

B. Repair Topping: Traffic-bearing, cement-based, polymer-modified, self-leveling product that can be applied in thicknesses from 1/4 inch. Products shall contain no added gypsum.

1. Cement Binder: ASTM C 150, portland cement or hydraulic or blended hydraulic cement as defined in ASTM C 219.

2. Primer: Product of topping manufacturer recommended for substrate, conditions, and application.

3. Aggregate: Well-graded, washed gravel, 1/8 to 1/4 inch or coarse sand as recommended by topping manufacturer.

4. Compressive Strength: Not less than 5500 psi (39 MPa) at 28 days when tested according to ASTM C 109/C 109M.

2.11 CONCRETE MIXES

A. Prepare design mixes for each type and strength of concrete determined by either laboratory trial mix or field test data bases, as follows:

1. Proportion normal-weight concrete according to ACI 211.1 and ACI 301.

2. Proportion lightweight structural concrete according to ACI 211.2 and ACI 301.

B. Footings, Tie Beams and Slabs-on-grade: Proportion normal-weight concrete mix as follows:

1. Compressive Strength (28 Days): 4,000 psi (W/C = 0.40 Max).

C. Ditch Wall, Footing, and Cantilevered Beam: Proportion normal-weight concrete mix as follows:

1. Compressive Strength (28 Days): 5,000 psi (W/C = 0.40 Max).

D. All other structural concrete, uon:

1. Compressive Strength (28 Days): 4,000 psi (W/C = 0.40 Max).

E. Slab Vapor Emissions Rates: At the time of finished flooring installation, vapor emissions shall not exceed a maximum of 5 lbs. per 1,000 square feet per 24 hours or the maximum emission established by the flooring manufacturer whichever is less. If the vapor emission rate exceeds the limit specified, take measures specified in Paragraph 3.17 to reduce the emissions to an acceptable level without delaying the project.

F. Cementitious Materials: Limit percentage, by weight, of cementitious materials other than portland cement in concrete as follows:

1. Fly Ash: 25 percent.

2. Combined Fly Ash and Pozzolan: 25 percent.

3. Combined Fly Ash or Pozzolan and Ground Granulated Blast-Furnace Slag: 50 percent portland cement minimum, with fly ash or pozzolan not exceeding 25 percent.

4. Combined Fly Ash, Pozzolans, and Silica Fume: 35 percent with fly ash or pozzolans not exceeding 25 percent and silica fume not exceeding 10 percent.

G. Maximum Water-Cementitious Materials Ratio: 0.40 maximum for concrete required to have low permeability, interior slabs with vapor sensitive floor coverings, or as noted on the drawings.

H. Limit water-soluble, chloride-ion content in hardened concrete per ACI 318 Chapter 4 for corrosion protection of reinforcing steel.

I. Admixtures: Use admixtures according to manufacturer's written instructions.

1. Use water-reducing admixture or high-range water-reducing admixture (superplasticizer) in concrete, as required, for placement and workability.

2. Use water-reducing and retarding admixture when required by high temperatures, low humidity, or other adverse placement conditions.

3. Use water-reducing admixture in pumped concrete, concrete for heavy-use industrial slabs and parking structure slabs, concrete required to be watertight, and concrete with a water-cementitious materials ratio below 0.50.

4. Use corrosion-inhibiting admixture in concrete mixes where indicated.

2.12 FABRICATING REINFORCEMENT

A. Fabricate steel reinforcement according to CRSI's "Manual of Standard Practice."

2.13 CONCRETE MIXING

A. Ready-Mixed Concrete: Measure, batch, mix, and deliver concrete according to ASTM C 94, and ASTM C 1116 and furnish batch ticket information. Batch ticket information shall include design mix reference, water that can be added at the jobsite, and admixtures. For transit mixing, complete not less than 70 revolutions of the drum at the manufacturer's rated mixing speed. Discharge concrete into its final position within 90 minutes after introduction of batch water to the cement. If a retarder admixture is used, the discharge time limit of 90 minutes may be increased by the time specified for retardation by the admixture manufacturer or the concrete supplier. Mix concrete a minimum of one minute at mixing speed immediately prior to discharge.

B. Project-Site Mixing: Measure, batch, and mix concrete materials according to ASTM C 94. Mix concrete materials in appropriate drum-type batch machine mixer.

1. For mixer capacity of 1 cu. yd.0.76 cu. m or less, continue mixing at least one and one-half minutes, but not more than five minutes after all ingredients are in mixer, before any part of batch is released.

2. For mixer capacity larger than 1 cu. yd.0.76 cu. m, increase mixing time by 15 seconds for each additional 1 cu. yd.0.76 cu. m.

3. Provide batch ticket for each batch discharged and used in the Work, indicating Project identification name and number, date, mix type, mix time, quantity, and amount of water added. Record approximate location of concrete placement in structure.

4. Hand mixed concrete will not be allowed, except to make up shortages for fence post footing, thresholds, curbs and gutters, thrust block and utility trench encasements.

PART 3 – EXECUTION

3.1 FORMWORK

A. Design, erect, shore, brace, and maintain formwork, according to ACI 301, to support vertical, lateral, static, and dynamic loads, and construction loads that might be applied, until concrete structure can support such loads.

B. Construct formwork so concrete members and structures are of size, shape, alignment, elevation, and position indicated, within tolerance limits of ACI 117.

C. Construct forms to prevent loss of concrete mortar.

D. Fabricate forms for easy removal without hammering or prying against concrete surfaces. Provide crush or wrecking plates where stripping may damage cast concrete surfaces. Provide top forms for inclined surfaces steeper than 1.5 horizontal to 1 vertical. Kerf wood inserts for forming keyways, reglets, recesses, and the like, for easy removal.

   1. Do not use rust-stained steel form-facing material.

E. Set edge forms, bulkheads, and intermediate screed strips for slabs to achieve required elevations and slopes in finished concrete surfaces. Provide and secure units to support screed strips; use strike-off templates or compacting-type screeds. Maintain the integrity of the vapor retarder membrane.

F. Provide temporary openings for cleanouts and inspection ports where interior area of formwork is inaccessible. Close openings with panels tightly fitted to forms and securely braced to prevent loss of concrete mortar. Locate temporary openings in forms at inconspicuous locations.

G. Chamfer exterior corners and edges of permanently exposed concrete.

H. Form openings, chases, offsets, sinkages, keyways, reglets, blocking, screeds, and bulkheads required in the Work. Determine sizes and locations from trades providing such items.

I. Clean forms and adjacent surfaces to receive concrete. Remove chips, wood, sawdust, dirt, and other debris just before placing concrete.

J. Retighten forms and bracing before placing concrete, as required, to prevent mortar leaks and maintain proper alignment.

K. Coat contact surfaces of forms with form-release agent, according to manufacturer's written instructions, before placing reinforcement.

3.2 EMBEDDED ITEMS

A. Place and secure anchorage devices and other embedded items required for adjoining work that is attached to or supported by cast-in-place concrete. Use Setting Drawings, templates, diagrams, instructions, and directions furnished with items to be embedded.

   1. Install anchor bolts, accurately located, to elevations required.

   2. Install reglets to receive top edge of foundation sheet waterproofing and to receive through-wall flashings in outer face of concrete frame at exterior walls, where flashing is shown at lintels, shelf angles, and other conditions.

   3. Install inserts, hangers, metal ties, nailing strips, blocking, grounds and other fastening devices needed for attachment of other work.

B. Locate electrical or mechanical conduits and fittings so that the strength of the concrete member is not impaired. “Conduits” include pipes, ducts, and electrical conduits. Unless required otherwise on the Drawings, conform to the following:

1. Concrete Columns: Do not embed conduits in columns.

2. Concrete Beams: Do not embed conduits in beams.

3. Concrete Walls: Do not embed conduits within concrete walls. Do not embed conduits horizontally in wall lengthwise. Provide sleeve for conduits passing through walls.

4. Suspended Concrete Slabs: Do not embed conduits within concrete suspended slabs. Conduits may pass vertically through suspended slabs perpendicular and shall be spaced a minimum of 10 times their outside diameter or as noted on structural drawings typical details. Avoid conduit crossings. Provide sleeve for conduits passing through slabs.

5. Concrete Slabs on Grade: Do not embed conduits within the thickness of any concrete slab on grade. Place conduits in the subgrade below the concrete slabs. Conduits may pass vertically through slabs-on-grade perpendicular and shall be spaced a minimum of 10 times their outside diameter or as noted on structural drawings typical details. Avoid conduit crossings. Provide sleeve for conduits passing through slabs.

C. Obtain Contracting Officer’s approval to install conduit or pipe penetrations that may unduly impair the strength of the structural member (for example, multiple pipe penetrations near the face of a column).

3.3 REMOVING AND REUSING FORMS

A. General: Formwork, for sides of beams, walls, columns, and similar parts of the Work, that does not support weight of concrete may be removed after cumulatively curing at not less than 50 degrees F(10 degrees C) for 24 hours after placing concrete provided concrete is hard enough to not be damaged by form-removal operations and provided curing and protection operations are maintained. The 24 hour period may be reduced to 12 hours in compliance with ACI 347R with prior approval from the Contracting Officer.

B. Leave formwork, for beam soffits, joists, slabs, and other structural elements, that supports weight of concrete in place until concrete has achieved the following:

1. 28-day design compressive strength and for a minimum of 14 days.

C. Clean and repair surfaces of forms to be reused in the Work. Split, frayed, delaminated, or otherwise damaged form-facing material will not be acceptable for exposed surfaces. Apply new form-release agent.

D. When forms are reused, clean surfaces, remove fins and laitance, and tighten to

close joints. Align and secure joints to avoid offsets. Do not use patched forms for exposed concrete surfaces unless approved by Contracting Officer.

3.04 SHORES AND RESHORES

A. Comply with ACI 318, ACI 318M, ACI 301, and recommendations in ACI 347R for design, installation, and removal of shoring and reshoring.

B. In multistory construction, extend shoring or reshoring over a sufficient number of stories to distribute loads in such a manner that no floor or member will be excessively loaded or will induce tensile stress in concrete members without sufficient steel reinforcement.

C. Plan sequence of removal of shores and reshore to avoid damage to concrete. Locate and provide adequate reshoring to support construction without excessive stress or deflection.

3.5 VAPOR RETARDERS

A. Vapor Retarder: Place, protect, and repair vapor-retarder sheets according to ASTM E 1643 “Standard Practice for Installation of Water Vapor Retarders” and manufacturer’s written instructions. The more stringent shall apply.

1. Use the greatest widths and lengths practical to minimize lap joints. Seal laps joints and edges with tape or materials compatible with the vapor retarder. Remove and replace torn, punctured, or damaged vapor barrier materials, except when minor repairs or patches are allowed by manufacturer’s instructions.

2. Do not cut or puncture vapor retarder. No penetrations of the vapor barrier allowed except for reinforcing steel and permanent utilities. Seal all penetrations including pipes and reinforcing. Repair damage and reseal vapor retarder before placing concrete.

3. Do not leave the vapor retarder exposed to ultraviolet radiation for more than a few days prior to the concrete pour. Remove standing water from the vapor retarder prior top concrete pour.

3.6 STEEL REINFORCEMENT

A. General: Comply with CRSI’s “Manual of Standard Practice” for placing reinforcement.

B. Clean reinforcement of loose rust and mill scale, earth, ice, and other foreign materials.

C. Accurately position, support, and secure reinforcement against displacement. Locate and support reinforcement with bar supports to maintain minimum concrete cover. Do not tack weld crossing reinforcing bars.

1. Support slab reinforcing bars as follows:

BAR SIZE	MAXIMUM DISTANCE BETWEEN SUPPORTS
#3	2 feet
#4	3 feet
#5	4 feet

D. Set wire ties with ends directed into concrete, not toward exposed concrete surfaces.

E. Install welded wire fabric in longest practicable lengths on bar supports spaced to minimize sagging. Lap edges and ends of adjoining sheets at least one mesh spacing. Offset laps of adjoining sheet widths to prevent continuous laps in either direction. Lace overlaps with wire.

3.7 JOINTS

A. General: Construct joints true to line with faces perpendicular to surface plane of concrete.

B. Construction Joints: Install so strength and appearance of concrete are not impaired, at locations indicated or as approved by Contracting Officer.

1. Place joints perpendicular to main reinforcement. Continue reinforcement across construction joints, unless otherwise indicated. Do not continue reinforcement through sides of strip placements of floors and slabs.

2. Locate horizontal joints in walls and columns at underside of floors, slabs, beams, and girders and at the top of footings or floor slabs.

3. Space vertical joints in walls as indicated. Locate joints beside piers integral with walls, near corners, and in concealed locations where possible.

4. Use a bonding agent at locations where fresh concrete is placed against hardened or partially hardened concrete surfaces.

5. Use epoxy-bonding adhesive at locations where fresh concrete is placed against hardened or partially hardened concrete surfaces.

C. Contraction Joints in Slabs-on-Grade: Form weakened-plane contraction joints, sectioning concrete into areas as indicated. Construct contraction joints for a depth equal to at least one-fourth of concrete thickness, as follows:

1. Grooved Joints: Form contraction joints after initial floating by grooving and finishing each edge of joint to a radius of 1/8 inch. Repeat grooving of contraction joints after applying surface finishes. Eliminate groover tool marks on concrete surfaces.

2. Sawed Joints: Form contraction joints with power saws equipped with

shatterproof abrasive or diamond-rimmed blades. Cut 1/8 inch wide joints into concrete when cutting action will not tear, abrade, or otherwise damage surface and before concrete develops random contraction cracks.

D. Dowel Joints: Install dowel sleeves and dowels or dowel bar and support assemblies at joints where indicated.

1. Use dowel sleeves or lubricate or asphalt-coat one-half of dowel length to prevent concrete bonding to one side of joint.

3.8 CONCRETE PLACEMENT

A. Before placing concrete, verify that installation of formwork, reinforcement, and embedded items is complete and that required inspections have been performed. Provide 72 hours advanced notification to Contracting Officer for each scheduled pour.

B. Before placing concrete, water may be added at Project site, subject to limitations of ACI 301. Up to two gallons of water per cubic yard of concrete may be added at the jobsite provided the approved design mix accommodates the additional water.

1. Do not add water to concrete after adding high-range water-reducing admixtures to mix.

C. Convey concrete from mixer to the place of final deposit rapidly by methods that prevent segregation or loss of ingredients and will insure the required quality of concrete. Use conveying equipment, conveyors, hoppers, baffles, chutes, pumps that are sized and designed to prevent cold joints from occurring and prevent segregation in discharged concrete. Clean conveying equipment before each placement.

D. Deposit concrete continuously or in layers of such thickness that no new concrete will be placed on concrete that has hardened enough to cause seams or planes of weakness. If a section cannot be placed continuously, provide construction joints as specified. Deposit concrete to avoid segregation.

E. Deposit concrete in forms in horizontal layers with proper consolidation into previous layers and in a manner to avoid inclined construction joints. Place each layer while preceding layer is still plastic, to avoid cold joints. For high wall pours (above 12 feet), Contractor must show its experience and demonstrate its proficiency before Contracting Officer will permit pours in excess of 12 feet.

1. Consolidate placed concrete with mechanical vibrating equipment. Use equipment and procedures for consolidating concrete recommended by ACI 309R.

2. Do not use vibrators to transport concrete inside forms. Insert and withdraw vibrators vertically at uniformly spaced locations no farther than the visible effectiveness of the vibrator. Place vibrators to rapidly penetrate placed layer

and at least 6 inches into preceding layer. Do not insert vibrators into lower layers of concrete that have begun to lose plasticity. At each insertion, limit duration of vibration to time necessary to consolidate concrete and complete embedment of reinforcement and other embedded items without causing mix constituents to segregate.

3. Make construction joints only where located on Drawings unless otherwise approved by Contracting Officer. Plan pours to continuously place concrete from one construction joint to another.

F. Deposit and consolidate concrete for floors and slabs in a continuous operation, within limits of construction joints, until placement of a panel or section is complete.

1. Consolidate concrete during placement operations so concrete is thoroughly worked around reinforcement and other embedded items and into corners.

2. Maintain reinforcement in position on chairs during concrete placement.

3. Screed slab surfaces with a straightedge and strike off to correct elevations.

4. Slope surfaces uniformly to drains where required.

5. Begin initial floating using bull floats or darbies to form a uniform and open-textured surface plane, free of humps or hollows, before excess moisture or bleed-water appears on the surface. Do not further disturb slab surfaces before starting finishing operations.

G. Hot-Weather Placement: Place concrete according to recommendations in ACI 305R and as follows, when hot-weather conditions exist:

1. Cool ingredients before mixing to maintain concrete temperature below 90 degrees F at time of placement. Chilled mixing water or chopped ice may be used to control temperature, provided water equivalent of ice is calculated to total amount of mixing water. Using liquid nitrogen to cool concrete is Contractor's option.

2. Cover steel reinforcement with water-soaked burlap so steel temperature will not exceed ambient air temperature immediately before embedding in concrete.

3. Fog-spray forms, steel reinforcement, and subgrade just before placing concrete. Keep subgrade moisture uniform without standing water, soft spots, or dry areas.

3.9 CONCRETE SLAB ON GRADE

A. For interior areas, unless specified elsewhere, place concrete floor slabs directly over vapor retarder overlain atop gravel cushion-capillary barrier and reinforce slabs per plan.

B. For exterior areas, unless specified elsewhere, place concrete floor slabs directly

over aggregate base course and reinforce slabs per drawings. Provide isolation and contraction joints where detailed and, at intersections, corners and at abutments. Place contraction joints not more than 40 feet apart, unless detailed otherwise.

1. Finish concrete true to grade, section and cross slope for sloped or crowned walks at 1.5 percent (1 percent minimum and 2 percent maximum). Round edges to 1/8" radius except saw-cut joints. Finish steps in connection with walks with same finish as walks.

3.10 FINISHING FORMED SURFACES

A. Rough-Formed Finish: As-cast concrete texture imparted by form-facing material with tie holes and defective areas repaired and patched. Remove fins and other projections exceeding ACI 347R limits for class of surface specified.

B. Smooth-Formed Finish: As-cast concrete texture imparted by form-facing material, arranged in an orderly and symmetrical manner with a minimum of seams. Repair and patch tie holes and defective areas. Remove fins and other projections exceeding 1/8 inch in height.

1. Apply to concrete surfaces exposed to public view or to be covered with a coating or covering material applied directly to concrete, such as waterproofing, dampproofing, veneer plaster, or painting.

2. Do not apply rubbed finish to smooth-formed finish.

C. Rubbed Finish: Apply the following to smooth-formed finished concrete:

1. Cementitious Coating (Cement Wash): Prepare, apply and cure the coating per manufacturer’s requirements. Apply in 1/16-inch thick coats not to exceed 1/8-inch.

a. Cementitious coatings are finished coatings and not to be used as patching or repair materials. Cement-sand-water mix are not cementitious coatings as defined under paragraph 2.09.E. Under no circumstances will products containing gypsum plaster be allowed as a cementitious coating.

D. Related Unformed Surfaces: At tops of walls, horizontal offsets, and similar unformed surfaces adjacent to formed surfaces, strike off smooth and finish with a texture matching adjacent formed surfaces. Continue final surface treatment of formed surfaces uniformly across adjacent unformed surfaces, unless otherwise indicated.

3.11 FINISHING FLOORS AND SLABS

A. General: Comply with recommendations in ACI 302.1R for screeding, restraightening, and finishing operations for concrete surfaces. Do not wet concrete surfaces.

B. Scratch Finish: While still plastic, texture concrete surface that has been screeded

and bull-floated or darbied. Use stiff brushes, brooms, or rakes.

1. Apply scratch finish to surfaces indicated and to surfaces to receive concrete floor topping or mortar setting beds for ceramic or quarry tile, portland cement terrazzo, and other bonded cementitious floor finishes.

C. Float Finish: Consolidate surface with power-driven floats or by hand floating if area is small or inaccessible to power driven floats. Restraighten, cut down high spots, and fill low spots. Repeat float passes and restraightening until surface is left with a uniform, smooth, granular texture.

1. Apply float finish to surfaces indicated, to surfaces to receive trowel finish, and to floor and slab surfaces to be covered with fluid-applied or sheet waterproofing, built-up or membrane roofing, or sand-bed terrazzo.

D. Trowel Finish: After applying float finish, apply first trowel finish and consolidate concrete by hand or power-driven trowel. Continue troweling passes and restraighten until surface is free of trowel marks and uniform in texture and appearance. Grind smooth any surface defects that would telegraph through applied coatings or floor coverings.

1. Apply a trowel finish to surfaces indicated and to floor and slab surfaces exposed to view or to be covered with resilient flooring, carpet, ceramic or quarry tile set over a cleavage membrane, paint, or another thin film-finish coating system.

2. Finish surfaces to the following tolerances, measured within 24 hours according to ASTM E 1155/E 1155M for a randomly trafficked floor surface:

a. Specified overall values of flatness, F(F) 25; and levelness, F(L) 20; with minimum local values of flatness, F(F) 17; and levelness, F(L) 15.

b. Specified overall values of flatness, F(F) 35; and levelness, F(L) 25; with minimum local values of flatness, F(F) 24; and levelness, F(L) 17; for slabs-on-grade.

c. Specified overall values of flatness, F(F) 30; and levelness, F(L) 20; with minimum local values of flatness, F(F) 24; and levelness, F(L) 15; for suspended slabs.

d. Specified overall values of flatness, F(F) 45; and levelness, F(L) 35; with minimum local values of flatness, F(F) 30; and levelness, F(L) 24.

3. Finish and measure surface so gap at any point between concrete surface and an unleveled freestanding 10-foot-long straightedge, resting on two high spots and placed anywhere on the surface, does not exceed the following:

a. 1/4 inch.

E. Trowel and Fine-Broom Finish: Apply a partial trowel finish, stopping after second

troweling, to surfaces indicated and to surfaces where ceramic or quarry tile is to be installed by either thickset or thin-set method. Immediately after second troweling, and when concrete is still plastic, slightly scarify surface with a fine broom.

F. Broom Finish: Apply a broom finish to exterior concrete platforms, steps, and ramps, and elsewhere as indicated.

1. Immediately after float finishing, slightly roughen trafficked surface by brooming with fiber-bristle broom perpendicular to main traffic route. Coordinate required final finish with Contracting Officer before application.

G. Swirled Finish: Apply a swirl finish to exterior concrete platforms, steps, and ramps, and elsewhere as indicated. Immediately after second troweling, and when concrete is still plastic, work the surface with a float in semi-circular or fan-like motion.

H. Slip-Resistive Aggregate Finish: Before final floating, apply slip-resistive aggregate finish where indicated and to concrete stair treads, platforms, and ramps. Apply according to manufacturer's written instructions and as follows:

1. Uniformly spread 25 lb/100 sq. ft. of dampened slip-resistive aggregate over surface in one or two applications. Tamp aggregate flush with surface, but do not force below surface.

2. After broadcasting and tamping, apply float finish.

3. After curing, lightly work surface with a steel wire brush or an abrasive stone, and water to expose slip-resistive aggregate.

I. Unpigmented Mineral Dry-Shake Floor Hardener Finish: After initial floating, apply mineral dry-shake materials to surfaces according to manufacturer's written instructions and as follows:

1. Uniformly apply mineral dry-shake materials at a rate of 100 lb/100 sq. ft., unless greater amount is recommended by manufacturer.

2. Uniformly distribute approximately two-thirds of mineral dry-shake materials over surface by hand or with mechanical spreader, and embed by power floating. Follow power floating with a second mineral dry-shake application, uniformly distributing remainder of material, and embed by power floating.

3. After final floating, apply a trowel finish. Cure concrete with curing compound recommended by dry-shake material manufacturer and apply immediately after final finishing.

J. Color Finish (Pigmented Mineral Dry-Shake Floor Hardener): Prior to color application, manufacturer's representative shall instruct finisher on application and curing requirements of Color Floor Hardener and be present during application. After initial floating, apply mineral dry-shake materials to surfaces according to manufacturer's written instructions and as follows:

1. Uniformly apply mineral dry-shake materials at a rate of 100 lb/100 sq. ft., unless greater amount is recommended by manufacturer. Do not cast material into standing water.

2. Uniformly distribute approximately two-thirds of mineral dry-shake materials over surface by hand or with mechanical spreader, and embed by power floating. Follow power floating with a second mineral dry-shake application at right angles to first application, uniformly distributing remainder of material, and embed by power floating.

3. After final floating, apply a trowel finish. Take care not to over trowel and “burn” the surface. Cure concrete with curing compound recommended by dry-shake material manufacturer and apply immediately after final finishing.

3.12 MISCELLANEOUS CONCRETE ITEMS

A. Filling In: Fill in holes and openings left in concrete structures, unless otherwise indicated, after work of other trades is in place. Mix, place, and cure concrete, as specified, to blend with in-place construction. Provide other miscellaneous concrete filling indicated or required to complete Work.

B. Curbs: Provide monolithic finish to interior curbs by stripping forms while concrete is still green and by steel-troweling surfaces to a hard, dense finish with corners, intersections, and terminations slightly rounded.

C. Equipment Bases and Foundations: Provide machine and equipment bases and foundations as shown on Drawings. Set anchor bolts for machines and equipment at correct elevations, complying with diagrams or templates of manufacturer furnishing machines and equipment.

D. Electrical Work: Use 3/4" maximum size of aggregates for duct encasement. Unless detailed otherwise, encase underground ducts or conduits as follows:

1. Provide 3 inches minimum concrete cover around ducts or conduits. Use spacers to place and hold ducts. Provide 18 inches minimum earth cover over top of concrete encasement unless otherwise detailed.

2. For future connections, provide a one foot section of ducts or conduits to extend beyond concrete encasement and terminate with a coupling or end cap.

E. Concrete for Drainage, Sewer and Plumbing Systems:

1. Do not use calcareous coarse aggregates in sewerage structures or components.

3.13 CONCRETE PROTECTION AND CURING

A. General: Protect freshly placed concrete from premature drying and excessive cold

or hot temperatures. Comply with ACI 306.1 for cold-weather protection and with recommendations in ACI 305R for hot-weather protection during curing.

B. Evaporation Retarder Apply evaporation retarder to unformed concrete surfaces before and during finishing operations. Apply according to manufacturer's written instructions after placing, screeding, and bull floating or darbying concrete, but before float finishing.

C. Formed Surfaces: Cure formed concrete surfaces, including underside of beams, supported slabs, and other similar surfaces. If forms remain during curing period, moist cure after loosening forms. If removing forms before end of curing period, continue curing by one or a combination of the curing methods listed in paragraph 3.13.D.

D. Unformed Surfaces: Begin curing immediately after finishing concrete. Cure unformed surfaces, including floors and slabs, concrete floor toppings, and other surfaces, by one or a combination of the following methods:

1. Moisture Curing: Keep surfaces continuously moist for not less than seven days with the following materials:

   a. Water.

   b. Continuous water-fog spray.

   c. Absorptive cover, water saturated, and kept continuously wet. Cover concrete surfaces and edges with 12-inch lap over adjacent absorptive covers.

2. Moisture-Retaining-Cover Curing: Cover concrete surfaces with moisture-retaining cover for curing concrete, placed in widest practicable width, with sides and ends lapped at least 12 inches, and sealed by waterproof tape or adhesive. Cure for not less than seven days. Immediately repair any holes or tears during curing period using cover material and waterproof tape.

   a. Moist cure or use moisture-retaining covers to cure concrete surfaces to receive floor coverings.

   b. Moist cure or use moisture-retaining covers to cure concrete surfaces to receive penetrating liquid floor treatments.

   c. Cure concrete surfaces to receive floor coverings with either a moisture-retaining cover or a curing compound that the manufacturer recommends for use with floor coverings.

3. Curing Compound: Apply uniformly in continuous operation by spray or roller according to manufacturer's written instructions. Recoat areas subjected to heavy rainfall within three hours after initial application. Maintain continuity of coating and repair damage during curing period.

4. Curing and Sealing Compound: Apply uniformly to floors and slabs indicated in a continuous operation by spray or roller according to manufacturer's written instructions. Recoat areas subjected to heavy rainfall within three hours after initial application where recommended by the manufacturer. Repeat process 24 hours later and apply a second coat. Maintain continuity of coating and repair damage during curing period.

3.14 LIQUID FLOOR TREATMENTS

A. Penetrating Liquid Floor Treatment: Prepare, apply, and finish penetrating liquid floor treatment according to manufacturer's written instructions.

1. Remove curing compounds, sealers, oil, dirt, laitance, and other contaminants and complete surface repairs.

2. Do not apply to concrete that is less than 14 days old.

3. Apply liquid until surface is saturated, scrubbing into surface until a gel forms; re-wet; and repeat brooming or scrubbing. Rinse with water; remove excess material until surface is dry. Apply a second coat in a similar manner if surface is rough or porous.

B. Sealing Coat: Uniformly apply a continuous sealing coat of curing and sealing compound to hardened concrete by spray or roller according to manufacturer's written instructions.

3.15 JOINT FILLING

A. Prepare, clean, and install joint filler according to manufacturer's written instructions. Defer joint filling as long as possible. Do not fill joints until construction traffic has permanently ceased.

B. Remove dirt, debris, saw cuttings, curing compounds, and sealers from joints; leave contact faces of joint clean and dry.

C. Install semirigid epoxy joint filler full depth in saw-cut joints and at least 2 inches deep in formed joints. Overfill joint and trim joint filler flush with top of joint after hardening.

3.16 CONCRETE SURFACE REPAIRS

A. Defective Concrete: Repair and patch defective areas. Remove and replace concrete that cannot be repaired and patched to Contracting Officer's approval.

B. Patching Mortar: Mix dry-pack patching mortar, consisting of one part portland cement to two and one-half parts fine aggregate passing a No. 16(1.2-mm) sieve, using only enough water for handling and placing.

C. Repairing Formed Surfaces: Surface defects include color and texture irregularities,

cracks, spalls, air bubbles, honeycombs, rock pockets, fins and other projections on the surface, and stains and other discolorations that cannot be removed by cleaning.

1. Immediately after form removal, cut out honeycombs, rock pockets, and voids more than 1/2 inch in any dimension in solid concrete but not less than 1 inch in depth. Make edges of cuts perpendicular to concrete surface. Clean, dampen with water, and brush-coat holes and voids with bonding agent. Fill and compact with patching mortar before bonding agent has dried. Fill form-tie voids with patching mortar or cone plugs secured in place with bonding agent.

2. Repair defects on surfaces exposed to view by blending white portland cement and standard portland cement so that, when dry, patching mortar will match surrounding color. Patch a test area at inconspicuous locations to verify mixture and color match before proceeding with patching. Compact mortar in place and strike off slightly higher than surrounding surface.

3. Repair defects on concealed formed surfaces that affect concrete's durability and structural performance as determined by Contracting Officer.

D. Repairing Unformed Surfaces: Test unformed surfaces, such as floors and slabs, for finish and verify surface tolerances specified for each surface. Correct low and high areas. Test surfaces sloped to drain for trueness of slope and smoothness; use a sloped template.

1. Repair finished surfaces containing defects. Surface defects include spalls, popouts, honeycombs, rock pockets, crazing and cracks in excess of 0.01 inch wide or that penetrate to reinforcement or completely through unreinforced sections regardless of width, and other objectionable conditions.

2. After concrete has cured at least 14 days, correct high areas by grinding.

3. Correct localized low areas during or immediately after completing surface finishing operations by cutting out low areas and replacing with patching mortar. Finish repaired areas to blend into adjacent concrete.

4. Correct other low areas scheduled to receive floor coverings with a repair underlayment. Prepare, mix, and apply repair underlayment and primer according to manufacturer's written instructions to produce a smooth, uniform, plane, and level surface. Feather edges to match adjacent floor elevations.

5. Correct other low areas scheduled to remain exposed with a repair topping. Cut out low areas to ensure a minimum repair topping depth of 1/4-inch to match adjacent floor elevations. Prepare, mix, and apply repair topping and primer according to manufacturer's written instructions to produce a smooth, uniform, plane, and level surface.

6. Repair defective areas, except random cracks and single holes 1-inch or less in diameter, by cutting out and replacing with fresh concrete. Remove defective areas with clean, square cuts and expose steel reinforcement with at least 3/4-

inch clearance all around. Dampen concrete surfaces in contact with patching concrete and apply bonding agent. Mix patching concrete of same materials and mix as original concrete except without coarse aggregate. Place, compact, and finish to blend with adjacent finished concrete. Cure in same manner as adjacent concrete.

7. Repair random cracks and single holes 1-inch or less in diameter with patching mortar. Groove top of cracks and cut out holes to sound concrete and clean off dust, dirt, and loose particles. Dampen cleaned concrete surfaces and apply bonding agent. Place patching mortar before bonding agent has dried. Compact patching mortar and finish to match adjacent concrete. Keep patched area continuously moist for at least 72 hours.

E. Perform structural repairs of concrete, subject to Contracting Officer's approval, using epoxy adhesive and patching mortar.

F. Repair materials and installation not specified above may be used, subject to Contracting Officer's approval.

3.17 DRYING CONCRETE SLABS TO LIMIT MOISTURE VAPOR EMISSIONS AND ALKALINITY

A. For concrete slabs (on grade or suspended) receiving floor finish susceptible to vapor emissions, protect, dry or seal concrete slabs to meet the required vapor emission level(s) of the intended floor finish systems. If choosing to use a floor sealing system, furnish submittals for approval.

1. Once slab drying has started, protect it from getting wet prior to floor finish installation. Test floor for moisture and alkalinity in accordance with SECTION 01450 - QUALITY REQUIREMENTS.

2. Test floor for vapor emission at locations and quantities recommended by the test kit manufacturer. Test pH levels of Concrete.

3. If the concrete slab does not meet the vapor emission or alkalinity level(s), use other means such as mechanical drying or floor sealing system(s) (penetrants, coatings, or membranes) to achieve the required levels.

4. If the concrete floor slab does not meet the required alkalinity level, neutralize, cure, dry or seal concrete to bring the concrete to an acceptable alkalinity level.

5. Be aware that no additional time or costs will be granted to meet the required vapor emission levels or alkalinity levels of the concrete surfaces.

B. Floor Vapor Emission Control System:

1. Acceptable products: Subject to compliance with requirements, products that may be incorporated into the Work include the following. Other products must be specifically approved by Contracting Officer for use in this project.

a. Floor Seal by Floor Seal Technology, Inc.

b. Vectr-R System by Sinak Corporation.

c. Cutdown by Dependable Floor Products.

2. Install per manufacturer's requirements to achieve a guaranteed vapor emission rate that meets the finished flooring recommended rates. Treatment shall not provide detrimental conditions to the concrete slab or floor covering materials. Make sure flooring adhesives are compatible with the treatment materials.

3. Installer shall provide proof of installer's certification by the treatment manufacturer.

4. Guarantee:

a. Manufacturer's Guarantee: Warrant against bond failure with concrete and failure of the system due to vapor emission and alkalinity levels. Guarantee Period: Five (5) years.

b. Project Guarantee: Replace original finished flooring materials and vapor emission control system due to failure of the vapor emission control system to control vapor emission and prevent unacceptable alkalinity levels. Provide extended warranty that is covered by a separate material and installation bond or by the manufacturer's product liability insurance policy specifically covering the work on this Project. Contracting Officer shall have final approval of accepting the bond or manufacturer's insurance policy.

3.18 FIELD QUALITY CONTROL

A. Testing Agency: Contractor shall hire and pay for a qualified independent testing and inspecting agency to sample materials, perform tests, and submit test reports during concrete placement according to requirements specified in this Article.

B. Testing Services: Testing of composite samples of fresh concrete obtained according to ASTM C 172 shall be performed according to the following requirements:

1. Testing Frequency: Obtain one composite sample for each day's pour of each concrete mix exceeding 5 cu. yd. (4 cu. m), but less than 25 cu. yd. (19 cu. m), plus one set for each additional 50 cu. yd. (38 cu. m) or fraction thereof.

2. Slump: ASTM C 143; one test at point of placement for each composite sample, but not less than one test for each day's pour of each concrete mix. Perform additional tests when concrete consistency appears to change.

3. Air Content: ASTM C 231, pressure method, for normal-weight concrete; ASTM C 173, volumetric method, for structural lightweight concrete; one test for each composite sample, but not less than one test for each day's pour of each

concrete mix.

4. Concrete Temperature: ASTM C 1064; one test hourly when air temperature is 40 degrees F (4.4 degrees C) and below and when 80 degrees F (27 degrees C) and above, and one test for each composite sample.

5. Unit Weight: ASTM C 567, one test for each composite sample, but not less than one test for each day's pour of each concrete mix

6. Compression Test Specimens: ASTM C 31/C 31M; cast and laboratory cure one set of four standard cylinder specimens for each composite sample.

   a. Cast and field cure one set of four standard cylinder specimens for each composite sample.

7. Compressive-Strength Tests: ASTM C 39; test two laboratory-cured specimens at 7 days and two at 28 days.

   a. Test two field-cured specimens at 7 days and two at 28 days.

   b. A compressive-strength test shall be the average compressive strength from two specimens obtained from same composite sample and tested at age indicated.

C. When strength of field-cured cylinders is less than 85 percent of companion laboratory-cured cylinders, Contractor shall evaluate operations and provide corrective procedures for protecting and curing in-place concrete.

D. Strength of each concrete mix will be satisfactory if every average of any three consecutive compressive-strength tests equals or exceeds specified compressive strength and no compressive-strength test value falls below specified compressive strength by more than 500 psi.

E. Test results shall be reported in writing to Contracting Officer, concrete manufacturer, and Contractor within 48 hours of testing. Reports of compressive-strength tests shall contain Project identification name and number, date of concrete placement, name of concrete testing and inspecting agency, location of concrete batch in Work, design compressive strength at 28 days, concrete mix proportions and materials, compressive breaking strength, and type of break for both 7-and 28-day tests.

F. Nondestructive Testing: Impact hammer, sonoscope, or other nondestructive device may be permitted by Contracting Officer but will not be used as sole basis for approval or rejection of concrete.

G. Moisture Vapor Emission Test: Standard test method meeting ASTM F 1869.

H. Alkalinity (pH Level) Testing: Standard test required for floor slabs and all wall and ceiling surfaces to receive painted finishes. Testing of concrete to receive paint

finish may be conducted under Painting Section.

I. Additional Tests: Testing and inspecting agency shall make additional tests of concrete when test results indicate that slump, air entrainment, compressive strengths, or other requirements have not been met, as directed by Contracting Officer. Testing and inspecting agency may conduct tests to determine adequacy of concrete by cored cylinders complying with ASTM C 42 or by other methods as directed by Contracting Officer.

END OF SECTION

SECTION 03420 – PRECAST CONCRETE PRODUCTS FOR BELOW GRADE CONSTRUCTION

PART 1 – GENERAL

1.1 SUMMARY

A. Plant manufactured precast concrete products for below grade construction.

B. Related Sections: Requirements that relate to this section are included but not limited to the section below.

1. Division 03 Section “Miscellaneous Cast-In-Place Concrete.”

C. References:

1. ACI 211.1: (1991; R 2009) Standard Practice for Selecting Proportions for Normal, Heavyweight and Mass Concrete.

2. ACI 305R: (2010) Guide to Hot Weather Concreting.

3. ACI 318: (2005) Building Code Requirements for Structural Concrete and Commentary.

4. ACPA 01-102: (2000) Concrete Pipe Handbook.

5. ACPA 01-110: (1984) Design Manual for Sulfide and Corrosion Prediction and Control.

6. ACPA QPC: (202016) QCast Plant Certification Manual.

7. ASTM A1064: (2016b) Standard Specification for Carbon-Steel Wire and Welded Wire Reinforcement, Plain and Deformed, for Concrete.

8. ASTM A615: (2016) Standard Specification for Deformed and Plain Carbon-Steel Bars for Concrete Reinforcement.

9. ASTM C1064: (2011) Standard Test Method for Temperature of Freshly Mixed Hydraulic-Cement Concrete.

10. ASTM C1107: (2014a) Standard Specification for Packaged Dry, Hydraulic-Cement Grout (Nonshrink).

11. ASTM C138: (2016a) Standard Test Method for Density (Unit Weight), Yield, and Air Content (Gravimetric) of Concrete.

12. ASTM C143: (2015a) Standard Test Method for Slump of Hydraulic-Cement Concrete.

13. ASTM C1478: (2008; R 2013) Standard Specification for Storm Drain Resilient Connectors Between Reinforced Concrete Storm Sewer Structures, Pipes and Laterals.

14. ASTM C171: (2016) Standard Specification for Sheet Materials for Curing Concrete.

15. ASTM C192: (2016a) Standard Practice for Making and Curing Concrete Test Specimens in the Laboratory.

16. ASTM C231: (2014) Standard Test Method for Air Content of Freshly Mixed Concrete by the Pressure Method.

17. ASTM C309: (2011) Standard Specification for Liquid Membrane-Forming Compounds for Curing Concrete.

18. ASTM C31: (2015a; E 2016) Standard Practice for Making and Curing Concrete Test Specimens in the Field.

19. ASTM C39: (2016b) Standard Test Method for Compressive Strength of Cylindrical Concrete Specimens.

20. ASTM C443: (2011) Standard Specification for Joints for Concrete Pipe and Manholes, Using Rubber Gaskets.

21. ASTM C857: (2016) Standard Practice for Minimum Structural Design Loading for Underground Precast Concrete Utility Structures.

22. ASTM C858: (2010; E 2012) Standard Specification for Underground Precast Concrete Utility Structures.

23. ASTM C877: (2008) External Sealing Bands for Concrete Pipe, Manholes, and Precast Box Sections.

24. ASTM C891: (2011) Installation of Underground Precast Concrete Utility Structures.

25. ASTM C920: 2014a) Standard Specification for Elastomeric Joint Sealants.

26. ASTM C990: (2009; R 2014) Standard Specification for Joints for Concrete Pipe, Manholes and Precast Box Sections Using Preformed Flexible Joint Sealants.

27. CSA A23.4: (2016) Precast Concrete - Materials and Construction.

28. NPCA QC Manual: (2012) Quality Control Manual for Precast and Prestressed Concrete Plants.

1.2 SUBMITTALS

A. Submit in accordance with SECTION 01330 – SUBMITTAL PROCEDURES.

B. Shop Drawings:

1. Precast Concrete Units.
2. Joint details including sealants.
3. Reinforcing steel.
4. Special finishes.

C. Product Data:

1. Precast Concrete Units.
2. Anchorage, Lifting Inserts, and installation/erection devices.
3. Embedded items.
4. Concrete Mix design.
5. Accessories.

D. Design Data:

1. Calculations where required.
   a. Calculations shall be stamped and signed by a Hawaii Licensed Structural Engineer.

E. Certificates:

1. Quality Control Procedures – Submit procedures as established the by precast manufacturer in accordance with NPCA QC Manual and ACPA QPC. Show that the following QC tests are performed as required and in accordance with the ASTM standards indicated.

F. Test Reports:

1. Material Certifications or Laboratory Test Reports:
   a. Include mill tests and all other test data, for Portland cement, blended cement, pozzolans, ground granulated blast furnace slag, silica fume, aggregate, admixtures, and curing compound proposed for use on this project.

2. Mix Test:

    a. Submit reports showing that the mix has been successfully tested to produce concrete with the properties specified and will be suitable for the job conditions. Such tests may include compressive strength, flexural strength, plastic or hardened air content, freeze thaw durability, abrasion and absorption. Clearly detail in the specifications special tests for precast concrete or cast-in items.

3. In-Plant QA/QC Inspection Reports:

    a. Submit inspection reports upon the request of the Engineer.

1.3 QUALITY ASSURANCE

A. Regulatory Requirements: Comply with all applicable requirements of the laws, codes, ordinances and regulations of the authorities having jurisdiction. Obtain necessary approvals from all such authorities.

B. Qualifications:

1. Precast Manufacturer - NPCA and ACPA Plant Certification.

    a. The precast concrete manufacturer must be certified by the National Precast Concrete Association's or the American Concrete Pipe Association's Plant Certification Program prior to and during production of the products for this project.

    b. A firm experienced in successfully producing work similar to that indicated for this Project, with a record of successful in-service performance, and with sufficient production capacity to produce required units without causing delay in the Work.

        1. Experience: Minimum of 5 years.

2. Contractor: Contractor is responsible for quality control of the Work.

3. Installer: An installer trained in the use of the materials and equipment to be employed in the Work.

    a. Experience: Minimum of 5 years.

C. Quality Control Procedures:

1. Submit quality control procedures established by the precast manufacturer in accordance with NPCA QC Manual and ACPA QPC. Show that the following QC tests are performed as required and in accordance with the ASTM standards indicated.

D. Inspection:

1. Submit testing and inspection reports as indicated in Section 1.2.E. Contractor shall hire and pay for all testing and inspections required.

2. Slump: Perform a slump test for each 150 cu yd of concrete produced, or once a day, whichever comes first. Perform slump tests in accordance with ASTM C143/C143M.

3. Temperature: Measure the temperature of fresh concrete when slump or air content tests are made and when compressive test specimens are made in accordance with ASTM C1064/C1064M.

4. Compressive Strength: Make at least four compressive strength specimens for each 150 cubic yards of concrete of each mix in accordance with the following Standards: ASTM C31/C31M, ASTM C192/C192M, ASTM C39/C39M.

5. Air Content: Perform tests for air content on air-entrained, wet-cast concrete for each 150 cu yd of concrete, but not less often than once each day when air-entrained concrete is used. Determine the air content in accordance with either ASTM C231/C231M or ASTM C173/C173M for normal weight aggregates and ASTM C173/C173M for lightweight aggregates.

6. Unit Weight: Perform tests for unit weight a minimum of once per week to verify the yield of batch mixes. Perform unit weight tests for each 100 cu yd of lightweight concrete in accordance with ASTM C138/C138M.

1.4 DELIVERY, STORAGE, AND HANDLING

A. Structural special inspections shall be provided by a certified third party special inspector hired and paid for by the Contractor and shall conform to 2012 International Building Code Chapter 17 provisions. Contractor shall notify structural engineer at least 72 hours in advanced for work requiring special inspection.

B. All testing shall be conducted by an independent, certified third party testing laboratory approved by the Contracting Officer and paid for by the Contractor. Contractor shall notify Special Inspector and testing agency at least 72 hours in advance for work to be performed. See Section 3.4 Field Quality Control for additional concrete testing information.

1.6 DELIVERY, STORAGE, AND HANDLING

A. Deliver precast units to the site in accordance with the delivery schedule to avoid excessive build-up of units in storage at the site. Upon delivery to the jobsite, all precast concrete units shall be inspected for quality and final acceptance.

B. Storage and Handling Requirements: Store units off the ground or in a manner that minimizes potential damage. Handle, transport, and store products in a manner to minimize damage. Lifting devices or holes must be consistent with industry

standards. Perform lifting with methods or devices intended for this purpose as indicated on shop drawings.

PART 2 – PRODUCTS

2.1 SYSTEM DESCRIPTION

A. Furnish precast concrete units designed and fabricated by an experienced and acceptable precast concrete manufacturer who has been, for at least five years, regularly and continuously engaged in the manufacture of precast concrete work similar to that indicated on the drawings. Coordinate precast work with the work of other trades. Below grade structures must comply with ASTM C858.

1. Standard Precast Units: Design standard precast concrete units to withstand indicated design load conditions in accordance with applicable industry design standards ACI 318MACI 318, ASTM C857, ACPA 01-102, Chapter 7-Design for Sulfide Control. Design must also consider stresses induced during handling, shipping and installation as to avoid product cracking or other handling damage. Indicate design loads for precast concrete units on the shop drawings. Submit shop drawings for standard precast concrete units furnished by the precast concrete producer for review by the Engineer. These drawings must demonstrate that the applicable industry design standards have been met. Include installation and construction information on shop drawings. Include details of steel reinforcement size and placement as well as supporting design calculations, if appropriate. Produce precast concrete units in accordance with the reviewed drawings. Submit cut sheets, for standard precast concrete units, showing conformance to project drawings and requirements, and to applicable industry design standards listed in this specification.

2. Custom-Made Precast Units: Submit design calculations for custom-made precast units, prepared and sealed by a Hawaii licensed structural engineer, for approval prior to fabrication. Include in the calculations the analysis of units for lifting stresses and the sizing of lifting devices. Submit drawings furnished by the precast concrete producer for review by the Engineer. Show on these drawings complete design, installation, and construction information in such detail as to enable the Engineer to determine the adequacy of the proposed units for the intended purpose. Include details of steel reinforcement size and placement as well as supporting design calculations, if appropriate. Produce precast concrete units in accordance with the structural drawings and reviewed shop drawings.

3. Proprietary Precast Units: Products manufactured under franchise arrangements must conform to all the requirements specified by the franchiser. Items not included in the franchise specification, but included in this specification, must conform to the requirements in this specification. Submit standard plans or informative literature, for proprietary precast concrete units. Make available supporting calculations and design details upon request. Provide sufficient information as to demonstrate that such products will perform the intended task.

4. Joints and Sealants: Provide joints and sealants between adjacent units of the type and configuration indicated on the drawings meeting specified design and performance requirements. See Section 2.2.G in this specification for additional information.

5. Concrete Mix Design:

   a. Proportions: Base selection of proportions for concrete on the methodology presented in ACI 211.1 for normal weight concrete and ACI 211.2 for lightweight concrete. Develop the concrete proportions using the same type and brand of cement, the same type and brand of pozzolan, the same type and gradation of aggregates, and the same type and brand of admixture that will be used in the manufacture of precast concrete units for the project. Do not use calcium chloride in precast concrete containing reinforcing steel or other embedded metal items. At a minimum of thirty days prior to precast concrete unit manufacturing, the precast concrete producer will submit a mix design and proportions for each strength and type of concrete that will be used. Furnish a complete list of materials, including quantity, type, brand and applicable data sheets for all mix design constituents as well as applicable reference specifications. The use of self-consolidating concrete is permitted, provided that mix design proportions and constituents meet the requirements of this specification.

   b. Strength: Provide precast concrete units with a 28-day compressive strength (f'c) of 5,500 psi.

   c. Water-to-Cement (W/C) Ratio: 0.40 Max.

   d. Air Content: The air content of concrete that will be exposed to freezing conditions must be within the limits given below:

NOMINAL MAX AGGREGATE SIZE	AIR CONTENT	
	EXPOSURE CLASS F1	EXPOSURE CLASS F2 & F3
3/8 INCH	6.0	7.5
1/2 INCH	5.5	7.0
3/4 INCH	5.0	6.0
1 INCH	4.5	6.0
1.5 INCH	4.5	5.5

   Note: For specified compressive strengths greater than 5000 psi, air content may be reduced 1 percent.

   e. Corrosion Control for Sanitary Sewer Systems: Follow design recommendations outlined in Chapter 7 of ACPA 01-102 or the ACPA 01-110 when hydrogen sulfide is indicated as a potential problem.

2.2 MATERIALS

A. Except as otherwise specified in the following paragraphs, conform material to Section 03300 CAST-IN-PLACE CONCRETE.

B. Pigments:

1. Non-fading and lime-resistant.

C. Reinforcement:

1. Reinforcing Bars: Deformed Billet-steel: ASTM A615/A615M.

D. Inserts and Embedded Metal: All items embedded in concrete must be of the type required for the intended task, and meet the following standards.

1. Structural Steel Plates, Angles, etc.: ASTM A36/A36M.

2. Hot-dipped Galvanized: ASTM A153/A153M.

3. Proprietary Items: In accordance with manufacturers published literature.

E. Accessories: Submit proper installation instructions and relevant product data for items including, but not limited to, sealants, gaskets, connectors, steps, cable racks and other items installed before or after delivery.

1. External Sealing Bands for Noncircular Sewer, Storm Drain and Culvert Pipe: ASTM C877M ASTM C877.

2. Preformed Flexible Joint Sealants for Concrete Pipe, Manholes, and Manufactured Box Sections: ASTM C990M ASTM C990.

3. Elastomeric Joint Sealants: ASTM C920.

F. Pipe Entry Connectors:

1. Pipe entry connectors must conform to ASTM C923M ASTM C923 or ASTM C1478M ASTM C1478.

G. Grout:

1. Nonshrink Grout must conform to ASTM C1107/C1107M. Cementitious grout must be a mixture of Portland cement, sand, and water. Proportion one part cement to approximately 2.5 parts sand, with the amount of water based on placement method. Provide air entrainment for grout exposed to the weather.

PART 3 – EXECUTION

3.1 FABRICATION AND PLACEMENT

A. Perform fabrication in accordance with NPCA QC Manual or ACPA QPC unless specified otherwise.

1. Forms: Use forms, for manufacturing precast concrete products, of the type and design consistent with industry standards and practices. They should be capable of consistently providing uniform products and dimensions. Construct forms so that the forces and vibrations to which the forms will be subjected can cause no product damage. Clean forms of concrete build-up after each use. Apply form release agents according to the manufacturer's recommendations and do not allow to build up on the form casting surfaces.

2. Reinforcement: Follow applicable ASTM Standard or ACI 318MACI 318 for placement and splicing. Fabricate cages of reinforcement either by tying the bars, wires or welded wire reinforcement into rigid assemblies or by welding, where permissible, in accordance with AWS D1.4/D1.4M. Position reinforcing as specified by the design and so that the concrete cover conforms to requirements. The tolerance on concrete cover must be one-third of that specified but not more than 1/2 inch. Take positive means to assure that the reinforcement does not move significantly during the casting operations.

3. Embedded Items: Position embedded items at locations specified in the design documents.

3.2 CONCRETE

A. Concrete Mixing:

1. Mixing operations must produce batch-to-batch uniformity of strength, consistency, and appearance.

B. Concrete Placing:

1. Deposit concrete into forms as near to its final location as practical. Keep the free fall of the concrete to a minimum. Consolidate concrete in such a manner that segregation of the concrete is minimized and honeycombed areas are kept to a minimum. Use vibrators to consolidate concrete with frequencies and amplitudes sufficient to produce well consolidated concrete.

C. Hot Weather Concreting:

1. Follow recommendations for hot weather concreting in ACI 305R. During hot weather, give proper attention to constituents, production methods, handling, placing, protection, and curing to prevent excessive concrete temperatures or water evaporation that could impair required strength or serviceability of the member or structure. The temperature of concrete at the time of placing must

not exceed 90 degrees F.

D. Concrete Curing:

1. Commence curing immediately following the initial set and completion of surface finishing.

   a. Curing by Moisture: Prevent moisture evaporation from exposed surfaces until adequate strength for stripping is reached by one of the following methods:

      1) Cover with polyethylene sheets a minimum of 6 mils thick in accordance with ASTM C171.

      2) Cover with burlap or other absorptive material and keep continually moist.

      3) Use a membrane-curing compound, conforming to ASTM C309 and applied at a rate not less than 200 square ft/gallon, or in accordance with manufacturers' recommendations.

   b. Curing with Heat and Moisture: Do not subject concrete to steam or hot air until after the concrete has attained its initial set. Apply steam, if used, within a suitable enclosure, which permits free circulation of the steam in accordance with CSA A23.4. If hot air is used for curing, take precautions to prevent moisture loss from the concrete. The temperature of the concrete must not be permitted to exceed 150 degrees F. These requirements do not apply to products cured with steam under pressure in an autoclave.

E. Surface Finish:

1. Finish unformed surfaces of wet-cast precast concrete products as specified. If no finishing procedure is specified, finish such surfaces using a strike-off to level the concrete with the top of the form.

2. Formed Non-Architectural Surfaces: Cast surfaces against approved forms following industry practices in cleaning forms, designing concrete mixes, placing and curing concrete. Normal color variations, form joint marks, small surface holes caused by air bubbles, and minor chips and spalls will be accepted but no major imperfections, honeycombs or other major defects will be permitted.

3. Unformed Surfaces: Finish unformed surfaces with a vibrating screed, or by hand with a float. Normal color variations, minor indentations, minor chips and spalls will be accepted. Major imperfections, honeycombs, or other major defects are not permitted.

4. Special Finishes: Troweled, broom or other finishes must be according to the requirements of project documents and performed in accordance with industry standards or supplier specifications. Submit finishes for approval when required by the project documents. The sample finishes must be approved prior to the

start of production.

F. Stripping Products from Forms:

1. Do not remove products from the forms until the concrete reaches the compressive strength for stripping required by the design. If no such requirement exists, products may be removed from the forms after the final set of concrete provided that stripping damage is minimal.

G. Patching and Repair:

1. No repair is required to formed surfaces that are relatively free of air voids and honeycombed areas, unless the surfaces are required by the design to be finished.

a. Repairing Minor Defects: Defects that will not impair the functional use or expected life of a precast concrete product may be repaired by any method that does not impair the product.

b. Repairing Honeycombed Areas: When honeycombed areas are to be repaired, remove all loose material and cut back the areas into essentially horizontal or vertical planes to a depth at which coarse aggregate particles break under chipping rather than being dislodged. Use proprietary repair materials in accordance with the manufacturer's instructions. If a proprietary repair material is not used, saturate the area with water. Immediately prior to repair, the area should be damp, but free of excess water. Apply a cement-sand grout or an approved bonding agent to the chipped surfaces, followed immediately by consolidating an appropriate repair material into the cavity.

c. Repairing Major Defects: Evaluate, by qualified personnel, defects in precast concrete products which impair the functional use or the expected life of products to determine if repairs are feasible and, if so, to establish the repair procedure.

H. Shipping Products:

1. Do not ship products until they are at least five days old, unless it can be shown that the concrete strength has reached at least 75 percent of the specified 28-day strength, or that damage will not result, impairing the performance of the product.

3.3 INSTALLATION

A. Site Access:

1. It is the Contractor's responsibility to provide adequate access to the site to facilitate hauling, storage and proper handling of the precast concrete products.

B. General Requirements:

1. Install precast concrete products to the lines and grades shown in the contract documents or otherwise specified.

2. Lift products by suitable lifting devices at points provided by the precast concrete producer.

3. Install products in accordance with the precast concrete producer's instructions. In the absence of such instructions, install underground utility structures in accordance with ASTM C891. Install pipe and manhole sections in accordance with the procedures outlined by the American Concrete Pipe Association.

4. Field modifications to the product will relieve the precast producer of liability even if such modifications result in the failure of the product.

C. Water Tightness:

1. Where water tightness is a necessary performance characteristic of the precast concrete product's end use, watertight joints, connectors and inserts should be used to ensure the integrity of the entire system.

3.4 FIELD QUALITY CONTROL

A. Field quality control is the responsibility of the Contractor. All expenses for required field quality control measures indicated shall be borne by the Contractor.

B. Manholes and Box Drains:

1. Manholes should be tested prior to backfilling to verify the integrity of the installed products. Testing prior to backfilling facilitates quick and easy repair when required. When vacuum testing a backfilled manhole, appropriate adjustments must be made to the testing procedure to account for site conditions such as high water tables as to avoid over loading boots and connectors. Prior to vacuum testing, make calculations to ensure that connectors and boots are not loaded past the design limit as indicated in ASTM C923.

C. Site Tests: When water tightness testing is required for an underground product, use one of the following methods:

1. Vacuum Testing: Prior to backfill vacuum test system according to ASTM C1244M ASTM C1244.

2. Water Testing: Perform water testing according to the contract documents and precast concrete producer's recommendations.

END OF SECTION

SECTION 04230 - CEMENT RUBBLE MASONRY

PART 1 - GENERAL

1.1 SUMMARY

A. Provide cement rubble masonry structures where shown on the drawings, as specified herein, and as needed for a complete and proper installation.

1.2 QUALITY ASSURANCE

A. Use adequate numbers of skilled workmen who are thoroughly trained and experienced in the necessary crafts and who are completely familiar with the specified requirements and the methods needed for proper performance of the work of this section.

1.3 SUBMITTALS

A. Submit samples of the proposed stone showing color range, color variation and textures.

PART 2 - PRODUCTS

2.1 STONE

A. The stones shall be clean, hard, sound, and durable. The stone shall be similar in color and size throughout the entire project. Each stone, except stones for filling or pinning interstices, shall have a thickness of not less than six (6) inches and width of not less than one and a half (1-1/2) times the thickness or less than twelve (12) inches. Except headers, each stone shall have a length of not less than one and a half (1-1/2) times its width. Stones measuring over twenty-seven (27) inches in length shall not be permitted.

B. Face stone shall have a volume of not less than 0.75 cubic feet.

C. Heart stone shall have a volume of not less than 0.5 cubic foot.

2.2 MORTAR

A. Mortar includes one (1) part cement to two (2) parts of fine aggregate or beach sand by volume. Add sufficient water to make the mortar easy to handle and spread with a trowel. Mix the fine aggregate and cement first, dry, in a tight container or mixing machine until the mixture assumes a uniform color. As the mixing continues, add the water until the mix attains the proper consistency. Mortar that has not been placed within thirty (30) minutes after the water has been added shall not be used. The Owner's Representative will not permit retempering of mortar.

B. Mortar for pointing includes one (1) part cement to one (1) part fine aggregate or beach sand by volume.

PART 3 – EXECUTION

3.1 EXECUTION

A. Construct the cement rubble masonry using experienced workmen. Use selected stones, roughly squared and pitched to lines at angles and ends of structures. Wet the stones thoroughly before laying. Lay the stones on beds that are approximately horizontal. Select large, flat stones for the bottom course. Bed the stones fully in Portland cement mortar. The stones shall have overlapping points at least six (6) inches and form a firm bond.

B. Distribute the headers uniformly throughout the walls of the structures to form at least one-fifth (1/5) of the exposed faces. The headers shall extend at least twelve (12) inches through the face wall into the backing. Where a wall is less than twenty-four (24) inches in thickness, the headers shall extend through the wall from the front face to the back face.

C. Build the interior of the walls up so that the stones bond without open spaces. Horizontal joints in the face shall not exceed one (1) inch in thickness and the vertical joints shall not exceed two (2) inches in width. Bed the face stones well without spalls. Walls shall have weep holes where shown in the contract or as ordered. If stones loosen after the mortar has set, remove the stone and the surrounding mortar. Relay the stone with fresh mortar.

D. Finish the wall with a two (2) inch mortar capping. The mortar capping includes one (1) part cement to two (2) parts fine aggregate or beach sand.

E. Make copings, bridge seats, and back walls of Class A concrete. Copings shall extend at least the full width of the wall, not less than eight (8) inches thick, and in sections from five (5) feet to eight (8) feet long. Cast-in-place or mold and set the sections in full mortar beds.

F. After the stones are set, the Contractor shall clean the exposed joints thoroughly of mortar to a depth of one (1) inch. Wet the exposed joints and point with Portland cement mortar. Cure the joint masonry and mortar capping satisfactorily not less than three (3) days after completion of the structure.

END SECTION

DIVISION 4 – MASONRY

SECTION 04810 – UNIT MASONRY ASSEMBLIES

PART 1 – GENERAL

1.1 SUMMARY

A. Section includes unit masonry assemblies consisting of the following:

1. Concrete masonry units.
2. Mortar and grout.
3. Reinforcing steel.
4. Masonry joint reinforcement.
5. Ties and anchors.
6. Miscellaneous masonry accessories.

1.2 DEFINITIONS

A. Reinforced Masonry: Masonry containing reinforcing steel in grouted cells.

1.3 SUBMITTALS

A. Submit in accordance with SECTION 01330 – SUBMITTAL PROCEDURES.

B. Product Data: For each different masonry unit, strength classification, additive, accessory, and other manufactured product specified.

1. Reinforcing steel - Certified mill test results or laboratory test results. Indicate bar size, yield strength, ultimate tensile strength, elongation, and bend test. Provide chemical composition for rebars that are to be welded.

C. Shop Drawings: Show fabrication and installation details for the following:

1. Reinforcing Steel: Detail bending and placement of unit masonry reinforcing bars. Comply with ACI 315, “Details and Detailing of Concrete Reinforcement.”

D. List of Materials Used in Constructing Sample Panels: List generic product names together with manufacturers, manufacturers’ product names, model numbers, lot numbers, batch numbers, source of supply, and other information as required to identify materials used. Include mix proportions for mortar and grout and source of aggregates.

E. Qualification Data: For firms and persons specified in “Quality Assurance” Article.

F. Material Certificates: Signed by manufacturers certifying that each of the following items complies with requirements:

1. Each cement product required for mortar and grout, including name of manufacturer, brand, type, and weight slips at time of delivery.

2. Grout mixes. Include description of type and proportions of ingredients to assure compliance with the compressive strength in IBC.

3. Each material and grade indicated for reinforcing bars.

4. Each type and size of joint reinforcement.

5. Each type and size of anchor, tie, and metal accessory.

G. Test Reports: Manufacturer’s tests shall be in accordance with ASTM C 140 for conformance with the requirements of ASTM C 90.

H. Schedules for project installation.

I. Quality Control Inspection Documents: Provide one copy of the following industry documents for use by Contracting Officer.

1. NCMA TEK 8-2A (1998): Removal of Stains from Concrete Masonry Walls.

1.4 QUALITY ASSURANCE

A. Source Limitations for Masonry Units: Obtain exposed masonry units of a uniform texture and color, or a uniform blend within the ranges accepted for these characteristics, through one source from a single manufacturer for each product required.

1. Block plant shall maintain a quality control program to monitor and control block chloride ion content. Soluble chloride ion content should not exceed 0.30 percent by volume of the cement material in the block, based on ACI 318-11 Table 4.3.1.

B. Source Limitations for Mortar Materials: Obtain mortar ingredients of a uniform quality, including color for exposed masonry, from one manufacturer for each cementitious component and from one source or producer for each aggregate.

C. Fire-Resistance Ratings: Where indicated, provide materials and construction identical to those of assemblies with fire-resistance ratings determined per ASTM E 119 by a testing and inspecting agency, by equivalent concrete

masonry thickness, or by another means, as acceptable to authorities having jurisdiction.

1.5 SPECIAL INSPECTION AND TESTING

A. Structural special inspections of masonry construction will be provided by the Structural Engineer and shall conform to the 2012 International Building Code Chapter 17 provisions. Contractor shall notify structural engineer at least 72 hours in advanced for work requiring special inspection.

B. All testing shall be made by an independent, third party testing laboratory approved by the Contracting Officer and paid for by the Contractor. Contractor shall notify Special Inspector and testing agency at least 72 hours in advance for work to be performed.

1.6 DELIVERY, STORAGE, AND HANDLING

A. Store masonry units on elevated platforms in a dry location. Carefully stack and handle masonry units so as to prevent chipping, marring or cracking of corners, edges and faces.

B. Store cementitious materials on elevated platforms, under cover, and in a dry location. Do not use cementitious materials that have become damp.

C. Store aggregates where grading and other required characteristics can be maintained and contamination avoided.

D. Deliver preblended, dry mortar mix in moisture-resistant containers designed for lifting and emptying into dispensing silo. Store preblended, dry mortar mix in delivery containers on elevated platforms, under cover, and in a dry location or in a metal dispensing silo with weatherproof cover.

E. Store masonry accessories, including metal items, to prevent corrosion and accumulation of dirt and oil.

1.7 PROJECT CONDITIONS

A. Protection of Masonry: In rainy locations and conditions, cover tops of walls, projections and sills with waterproof sheeting to repel water.

B. Do not apply uniform floor or roof loads for at least 12 hours and concentrated loads for at least 3 days after building masonry walls or columns.

C. Stain Prevention: Protect to prevent stain damage to mar final finish or finishing techniques. Prevent grout, mortar, and soil from staining the face of masonry to be left exposed, stained or painted.

D. Hot-Weather Requirements: Protect unit masonry work when temperature

and humidity conditions produce excessive evaporation of water from mortar and grout. Provide artificial shade and wind breaks and use cooled materials as required.

1. When ambient temperature exceeds 90 degrees F with a wind velocity greater than 8 mph, do not spread mortar beds more than 48 inches ahead of masonry. Set masonry units within one minute of spreading mortar.

PART 2 – PRODUCTS

2.1 CONCRETE MASONRY UNITS

A. General: Provide shapes indicated and as follows:

1. Provide special shapes for lintels, corners, jambs, sash, headers, bonding, and other special conditions.

2. Provide square-edged units for outside corners, unless indicated as bullnose.

3. Provide “H” blocks for below grade foundation walls and scheduled to be fully grouted.

4. Provide special architectural blocks including Breeze Blocks, Ground Face Blocks and Decorative Screen Blocks as indicated on Architectural drawings.

B. Concrete Masonry Units: ASTM C 90 and as follows:

1. Unit Compressive Strength: Provide load bearing units with minimum average net-area compressive strength of 1,900 psi with a minimum net area compressive strength of masonry assemblies (F’m) of 2,000 psi.

`

2. All masonry blocks shall be manufactured with MasterPel 240 water-repellent and efflorescence control admixture or pre-reviewed equal.

3. Size (Width): Manufactured to the following dimensions within variations in dimensions only as permissible per ASTM C 90.

a. 8 inches nominal; 7-5/8 inches actual.

4. Special Architectural Concrete Masonry Units: Shall be standard units manufactured to the same specifications as concrete masonry units. Pattern as shown on the architectural drawings or specified herein.

5. Grade: N.

6. Type: II.

7. Weight Classification: Normal Weight.

8. Exposed Face: Standard, gray and smooth.

9. Moisture Control: Cure units by atmospheric drying for not less than 30 days before installation to comply with ASTM C 140.

10. All masonry blocks shall be manufactured with Master

2.2 MORTAR AND GROUT MATERIALS

A. Portland Cement: ASTM C 150, Type I or II. Provide natural color or white cement as required to produce mortar color indicated.

B. Hydrated Lime: ASTM C 207, Type S.

C. Mortar Cement: Type as scheduled in mix designs in Article 2.11.

D. Masonry Cement: Type as scheduled in mix designs in Article 2.11.

E. Aggregate for Mortar: ASTM C 144, except for joints less than 1/4 inch use aggregate graded with 100 percent passing the No. 16 sieve.

F. Aggregate for Grout: ASTM C 404.

G. Mortar Pigments: Natural and synthetic iron oxides and chromium oxides, compounded for use in mortar mixes. Use only pigments with a record of satisfactory performance in masonry mortar.

H. Plasticizer Additive: Acceptable for use as a substitute for hydrated lime in masonry mortar.

1. Powder Type: Proprietary pozzolanic mortar plasticizer.

2. Liquid Type: Proprietary mixture of resins.

I. Water for use in mixing Mortar and Grout: Potable and complying with ASTM C 94. Clean and free from injurious amounts of oils, acids alkalis, salts, organic materials or other substances that may be deleterious to both mortar and reinforcement.

J. Grout Color: Grout Color matching the color of the Ground Face Sunrise Block Color

2.3 REINFORCING STEEL

A. Uncoated Steel Reinforcing Bars: ASTM A 615/A 615M, deformed, Grade 60 unless otherwise indicated on the drawings or specified herein.

2.4 TIES AND ANCHORS, GENERAL

A. General: Provide ties and anchors, specified in subsequent articles, made from materials that comply with this Article, unless otherwise indicated.

B. Hot-Dip Galvanized Carbon-Steel Wire: ASTM A 82; with ASTM A 153, Class B-2 coating.

C. Stainless-Steel Wire: ASTM A 580/A 580M, Type 316.

D. Stainless-Steel Sheet: ASTM A 666, Type 316.

2.5 MISCELLANEOUS ANCHORS

A. Unit Type Inserts in Concrete: Cast-iron or malleable-iron inserts of type and size indicated.

B. Anchor Bolts: Steel bolts complying with ASTM A 36 Threaded Rods; with ASTM A 563 (ASTM A 563M) hex nuts and, where indicated, flat washers; hot-dip galvanized to comply with ASTM A 153, Class C; of diameter and length indicated and in the following configurations:

1. Headed bolts.

2. Non-headed bolts, bent in manner indicated.

2.6 MISCELLANEOUS MASONRY ACCESSORIES

A. Compressible Filler: Premolded filler strips complying with ASTM D 1056, Grade 2A1; compressible up to 35 percent; of width and thickness indicated; formulated from neoprene.

B. Preformed Control-Joint Gaskets: Material as indicated below, designed to fit standard sash block and to maintain lateral stability in masonry wall; size and configuration as indicated.

1. Styrene-Butadiene-Rubber Compound: ASTM D 2000, Designation M2AA-805, or

2. PVC: ASTM D 2287, Type PVC-65406.

C. Bond-Breaker Strips: Asphalt-saturated, organic roofing felt complying with ASTM D 226, Type I (No. 15 asphalt felt).

D. Adhesive: Type recommended by insulation board manufacturer for application indicated.

2.7 MASONRY CLEANERS

A. Job-Mixed Detergent Solution: Solution of 1/2-cup dry measure tetrasodium polyphosphate and 1/2-cup dry measure laundry detergent dissolved in 1-gallon of water.

B. Proprietary Acidic Cleaner: Manufacturer's standard-strength cleaner designed for removing mortar or grout stains, efflorescence, and other new construction stains from new masonry without discoloring or damaging masonry surfaces. Use product expressly approved for intended use by cleaner manufacturer and manufacturer of masonry units being cleaned.

2.8 MORTAR AND GROUT MIXES

A. General: Do not use admixtures, including pigments, air-entraining agents, accelerators, retarders, water-repellent agents, antifreeze compounds, or other admixtures, unless otherwise indicated.

1. Do not use calcium chloride in mortar or grout.

B. Pre-blended, Dry Mortar Mix: Furnish dry mortar ingredients in the form of a pre-blended mix. Measure quantities by weight to ensure accurate proportions, and thoroughly blend ingredients before delivering to the job site.

C. Mortar for Unit Masonry:

1. The proportioning of materials for mortar and grout shall be by volume and done in such manner that the specified proportions can be controlled and accurately maintained. Measure fine aggregate in a damp loose condition. Mix materials in a mechanical batch mixer for at least 3 minutes for mortar and 5 minutes for grout, but do not mix more than 10 minutes. Hand mixing is permitted only for small batches of 3 cubic feet or less.

2. Prepare Mortar Mix with sufficient water to provide a workable consistency. Use and place mortar within 1-1/2 hours after mixing.

3. Prepare Mortar Mix Designs 2 through 5 strictly in accordance with the admixture manufacturer's instructions. Place mortar within 2-1/2 hours after mixing. No materials which start to set shall be retempered.

D. Mortar Mix Designs: Mortar shall be freshly prepared and uniformly mixed in one of the following proportions unless directed otherwise by manufacturer of plasticizer additive:

1. Mortar Mix One;
   Type M Mortar

One part	masonry cement
2-1/2 to 3 parts	mortar aggregate

2. Mortar Mix 2;
   Type M Mortar

2 sacks	Portland cement
1/2 to 1 bag	powdered plasticizer additive (7 pound bag)
6 cu. ft.	mortar aggregate

3. Mortar Mix 3;
   Type M Mortar:

One sack	Portland cement
3 ounces	liquid plasticizer additive
2-1/4 to 2-3/4 cu. ft.	mortar aggregate

4. Mortar Mix 4;
   Type S Mortar:

2 sacks	Portland cement
One bag	powdered plasticizer additive (7 pound bag)
9 cu. ft.	mortar aggregate

5. Mortar Mix 5;
   Type S Mortar

One sack	Portland cement
3 ounces	liquid plasticizer additive
2-1/2 to 3 cu. ft.	mortar aggregate

E. Grout for Unit Masonry: Sufficient water shall be used to produce a consistency just fluid enough for pouring or pumping without segregation. Grout shall be used and placed in final position within 90 minutes after mixing, but shall in no case be used after initial set has occurred. This time limitation is permitted to be waived, if the grout is of such slump that it can be placed without addition of water.

1. Grout shall attain not less than 2,500 psi 28-day compressive strength per ASTM C 1019 unless noted otherwise on drawings.

2. Use plasticizers additives for below grade foundation walls scheduled to be grouted to ensure full dispersal of mix.

F. Grout Mixes: Conform to ASTM C 476 for grout mixed on-site. Prepare and uniformly mix grout in the following proportion:

1. Fine Grout

1 part	Portland cement
Fine Aggregate:	2-1/4 to 5 times the sum of the volumes of the cementitious materials

2. Ready-mix Grout: Conform to ASTM C 476 for ready-mix suppliers.

G. Pigmented Mortar: Select and proportion pigments with other ingredients to produce color required. Limit pigments to the following percentages of

cement content by weight:

1. For mineral-oxide pigments and portland cement-lime mortar, not more than 10 percent.

2. For mineral-oxide pigments and mortar cement mortar, not more than 5 percent.

H. Colored-Aggregate Mortar: Produce required mortar color by using colored aggregates combined with selected cementitious materials.

1. Mix to match Contracting Officer's sample.

I. Grout Color: Grout Color matching the color of the Ground Face Sunrise Block Color

PART 3 – EXECUTION

3.1 EXAMINATION

A. Examine conditions, with Installer present, for compliance with requirements for installation tolerances and other conditions affecting performance.

1. For the record, prepare written report, endorsed by Installer, listing conditions detrimental to performance.

2. Verify that floor levels, footing levels or foundations are within tolerances specified.

3. Verify that reinforcing dowels are properly placed.

4. Proceed with installation only after unsatisfactory conditions have been corrected.

B. Before installation, examine rough-in and built-in construction to verify actual locations of piping connections.

3.2 INSTALLATION, GENERAL

A. General: All masonry units shall be clean and handled to protect and minimize chipping, spalling and cracking. All bed on which masonry is to be laid shall be clean.

B. Masonry units shall not be wetted prior to use. Units which have become wet shall be allowed to dry thoroughly before laying. If water is splashed on the block and a color difference does not occur (from the water) then the block units are too wet to be laid. (Source: Reinforced Concrete Masonry Construction Inspector's Handbook, Fourth Edition, paragraph 12.3.4)

C. Build chases and recesses to accommodate items specified in this Section and in other Sections of the Specifications.

D. Leave openings for equipment to be installed before completing masonry. After installing equipment, complete masonry to match the construction immediately adjacent to the opening.

E. Cut masonry units with motor-driven saws to provide clean, sharp, unchipped edges. Cut units as required to provide a continuous pattern and to fit adjoining construction. Where possible, use full-size units without cutting. Allow units cut with water-cooled saws to dry before placing, unless wetting of units is specified. Install cut units with cut surfaces and, where possible, cut edges concealed.

F. Select and arrange units for exposed unit masonry to produce a uniform blend of colors and textures.

3.3 CONSTRUCTION TOLERANCE

A. Comply with the tolerances in the national concrete masonry association Specification for Structures ACI 530-02/ASCE 6/TMS 602 as applicable to climate indigenous to Hawaii and as noted.

B. For conspicuous vertical lines, such as external corners, door jambs, reveals, and expansion and control joints, do not vary from plumb by more than 1/4-inch in 20 feet, nor 1/2-inch maximum.

C. For vertical alignment of exposed head joints, do not vary from plumb by more than 1/4-inch in 10 feet, nor 1/2-inch maximum.

D. For conspicuous horizontal lines, such as exposed lintels, sills, parapets, and reveals, do not vary from level by more than 1/4-inch in 20 feet, nor 1/2-inch maximum.

E. For exposed bed joints, do not vary from thickness indicated by more than plus or minus 1/8-inch, with a maximum thickness limited to 1/2-inch. Do not vary from bed-joint thickness of adjacent courses by more than 1/8-inch.

F. For exposed head joints, do not vary from thickness indicated by more than plus or minus 1/8-inch. Do not vary from adjacent bed-joint and head-joint thicknesses by more than 1/8-inch.

3.4 LAYING MASONRY WALLS

A. Lay out walls in advance for accurate spacing of surface bond patterns with uniform joint thicknesses and for accurate location of openings, movement-type joints, returns, and offsets. Avoid using less-than-half-size units, particularly at corners, jambs, and, where possible, at other locations.

B. When foundation is at specified levels, lay first course masonry units in a mortar bed not exceeding 3/4-inch thick. Bed webs of adjoining cells that contain reinforcement in mortar to prevent escape of grout.

C. Bond Pattern for Exposed Masonry: Lay exposed masonry in the following bond pattern; do not use units with less than nominal 4-inches horizontal face dimensions at corners or jambs.

1. One-half running bond with vertical joint in each course centered on units in courses above and below unless otherwise indicated on Drawings.

2. Refer to Architectural drawings for special architectural bond patterns used on the project.

D. Lay concealed masonry with all units in a wythe in running bond or bonded by lapping not less than 2 inches. Bond and interlock each course of each wythe at corners. Do not use units with less than nominal 4-inches horizontal face dimensions at corners or jambs.

E. Stopping and Resuming Work: In each course, rack back one-half-unit length for one-half running bond or one-third-unit length for one-third running bond; do not tooth. Clean exposed surfaces of set masonry, wet clay masonry units lightly if required, and remove loose masonry units and mortar before laying fresh masonry.

F. Built-in Work: As construction progresses, build in items specified under this and other Sections of the Specifications. Fill in solidly with masonry around built-in items.

G. Grout space between hollow-metal frames and masonry solidly with mortar, unless otherwise indicated.

1. Grout mix: Use one of the following.

a. One of the mortars mixed specified in Part 2 above.

b. One of the grout mixes specified in Part 2 above.

2. Gypsum board joint compound or other gypsum containing compounds are not permitted.

H. Where built-in items are to be embedded in cores of hollow masonry units, place a layer of metal lath in the joint below and rod mortar or grout into core.

I. Build non-load-bearing interior partitions full height of story to underside of solid floor or roof structure above, unless otherwise indicated.

1. Install compressible filler in joint between top of partition and underside of structure above.

2. Wedge non-load-bearing partitions against structure above with small pieces of tile, slate, or metal. Fill joint with mortar after dead-load deflection of structure above approaches final position.

3. At fire-rated partitions, install firestopping in joint between top of partition and underside of structure above to comply with firestopping provisions of the Construction Drawings and Specifications.

3.5 MORTAR BEDDING AND JOINTING

A. Lay hollow masonry units as follows:

1. With full mortar coverage on horizontal and vertical face shells.

2. Bed webs in mortar in starting course on footings and in all courses of piers, columns, and pilasters, and where adjacent to cells or cavities to be filled with grout.

3. For starting course on footings where cells are not grouted, spread out full mortar bed, including areas under cells.

4. Bed cross webs.

B. Lay horizontal-cell units with full bed joints, unless otherwise indicated. Keep drainage channels, if any, free of mortar. Form head joints with sufficient mortar so excess will be squeezed out as units are placed in position. Butter both sides of units to be placed, or butter one side of unit already in place and one side of unit to be placed.

C. Maintain joint thicknesses indicated, except for minor variations required to maintain bond alignment. If not indicated, lay walls with 1/4- to 3/8-inch thick joints.

D. Where epoxy-mortar pointed joints are indicated, rake out setting mortar to a uniform depth of 1/4-inch and point with epoxy mortar to comply with epoxy-mortar manufacturer's written instructions.

E. Tool exposed joints slightly concave when thumbprint hard, using a jointer larger than the joint thickness, unless otherwise indicated.

F. Cut joints flush for masonry walls to receive plaster or other direct-applied finishes (other than paint), unless otherwise indicated.

3.6 LINTELS

A. Provide masonry lintels where shown and where openings of more than 24 inches are shown without structural steel or other supporting lintels.

1. Provide prefabricated or built-in-place masonry lintels. Use specially formed bond beam units with reinforcing bars placed as indicated and filled with coarse grout. Cure precast lintels before handling and installing. Temporarily support built-in-place lintels until cured.

2. Provide either of above at Contractor's option or provide precast or formed-in-place concrete lintels complying with requirements in SECTION 03300 - CAST-IN-PLACE CONCRETE.

B. Provide minimum bearing of 8 inches at each jamb, unless otherwise indicated.

3.7 REINFORCED UNIT MASONRY INSTALLATION

A. Temporary Formwork and Shores: Construct formwork and shores to support reinforced masonry elements during construction.

1. Construct formwork to conform to shape, line, and dimensions shown. Make it tight to prevent leakage of mortar and grout. Brace, tie, and support forms to maintain position and shape during construction and curing of reinforced masonry.

2. Do not remove forms and shores until reinforced masonry members have hardened sufficiently to carry their own weight and other temporary loads that may be placed on them during construction.

B. Placing Reinforcement: Comply with requirements ACI 530 Sec 3.4/ASCE 6/TMS 602.

C. Grouting: Do not place grout until entire height of masonry to be grouted has attained sufficient strength to resist grout pressure.

1. Comply with requirements of ACI 530 Sec. 3.5/ASCE 6/TMS 602 for cleanouts and for grout placement, including minimum grout space and maximum pour height.

3.8 REPAIRING, POINTING, AND CLEANING

A. Remove and replace masonry units that are loose, chipped, broken, stained, or otherwise damaged or that do not match adjoining units. Install new units to match adjoining units; install in fresh mortar, pointed to eliminate evidence of replacement.

B. Pointing: During the tooling of joints, enlarge voids and holes, except weep holes, and completely fill with mortar. Point up joints, including corners, openings, and adjacent construction, to provide a neat, uniform appearance. Prepare joints for sealant application.

C. In-Progress Cleaning: Clean unit masonry as work progresses by dry

brushing to remove mortar fins and smears before tooling joints.

D. Final Cleaning: After mortar is thoroughly set and cured, clean exposed masonry as follows:

1. Remove large mortar particles by hand with wooden paddles and nonmetallic scrape hoes or chisels.

2. Test cleaning methods on sample wall panel; leave one-half of panel uncleaned for comparison purposes. Obtain Contracting Officer's approval of sample cleaning before proceeding with cleaning of masonry.

3. Protect adjacent stone and non-masonry surfaces from contact with cleaner by covering them with liquid strippable masking agent, polyethylene film, or waterproof masking tape.

4. Wet wall surfaces with water before applying cleaners; remove cleaners promptly by rinsing the surfaces thoroughly with clear water.

END OF SECTION

SECTION 05500 – FABRICATED METAL

PART 1 – GENERAL

1.1 SUMMARY

A. General Requirements: Provide fabricated metal work in place, complete.

1.2 SUBMITTALS

A. Submit complete, dimensioned shop drawings showing material connections and shop coating of all fabricated metals. Submit structural welders' qualification certificates.

1.3 FIELD MEASUREMENTS

A. Take all necessary field measurements required to insure proper fit of the various items of work.

1.4 QUALITY ASSURANCE

A. Shop Assembly: Preassemble items in shop to greatest extent possible to minimize field splicing and assembly. Disassemble units only as necessary for shipping and handling limitations. Clearly mark units for reassembly and coordinated installation.

B. Fabricator Qualifications: A firm experienced in producing metal fabrications similar to those indicated for this Project and with a record of successful in-service performance, as well as sufficient production capacity to produce required units.

1.5 PROJECT CONDITIONS

A. Field Measurements: Where metal fabrications are indicated to fit walls and other construction, verify dimensions by field measurements before fabrication and indicate measurements on Shop Drawings. Coordinate fabrication schedule with construction progress to avoid delaying the Work.

B. Established Dimensions: Where field measurements cannot be made without delaying the Work, establish dimensions and proceed with fabricating metal fabrications without field measurements. Coordinate construction to ensure that actual dimensions correspond to established dimensions. Allow for trimming and fitting.

PART 2 – PRODUCTS

2.1 MATERIALS

A. Hot Rolled Structural Shapes: ASTM A36

B. Structural Plate: ASTM A283

C. Cast Iron: ASTM A47

D. Steel Pipe: ASTM A120, Schedule 40, galvanized.

E. Bolts: ASTM A307, electrogalvanized, unless indicated otherwise on drawings.

F. Galvanized Steel Sheets: ASTM A525.

G. Stainless Steel: ASTM A276, Type 304 or 316. All stainless steel components shall be Type 316, unless indicated otherwise on drawings. Stainless steel bolts, nuts and washers to be Type 316 only.

H. Aluminum Sheet and Plate: ASTM B209, Alloy 3003.

I. Aluminum Shapes: ASTM B221, Alloy GS10A (6063-T5).

J. Aluminium Pipe Rail: Alloy 6063-T5, Schedule 40, clear anodized 215R1.

K. Welding Electrodes: AWS D1.0.

2.2 STEEL

A. Steel pipe shall be ASTM A 53, Type E or S, Grade B. Provide 6-inch galvanized standard weight steel pipe as specified in ASTM A 53. Anchor post sleeves in concrete as indicated.

B. Hot-dip galvanized items specified to be zinc-coated, after fabrication where practicable. Galvanizing: ASTM A 123.

C. Repair damaged surfaces with galvanizing repair method and paint conforming to ASTM A 780 or by application of stick or thick paste material specifically designed for repair of galvanizing, as approved by the Owner. Clean areas to be repaired and remove slag from welds. Heat surfaces to which stick or paste material is applied, with a torch to a temperature sufficient to melt the metallics in stick or paste; spread molten material uniformly over surfaces to be coated and wipe off excess material.

PART 3 – EXECUTION

3.1 STEEL FABRICATION

A. AISC Manual of Steel Construction. Stainless steel bars and shapes shall conform to ASTM A276. Welding for stainless steel shall conform to ANSI/AWS B2.1.005 and B.2.1.009.

3.2 CASTINGS

A. Castings shall be smooth, free from scales, lumps, blisters, sand holes and other defects.

3.3 GALVANIZING

A. Items so specified shall be hot dipped galvanized after fabrication. Galvanizing shall conform to ASTM A123, unless specified otherwise.

3.4 HANDRAILS

A. Handrails shall be of the material indicated on the drawings. Posts shall be extra strong pipe.

3.5 CHAINS

A. Chain sections of pipe railing shall be of the material indicated on the drawings, and constructed as follows: 3/8-inch eye bolts shall be fastened to the end posts at the centerline of the top rail. A length of 3/8-inch chain having 11 links per foot shall be fastened to the eye bolt. The free end shall have a snap hook to engage the free eye bolt. Free end shall be to the right side when approaching the railing.

3.6 ALUMINUM ITEMS

A. All aluminum items shall be fabricated in accordance with the best approved shop practice, and shall have a 0.4 mil 204R1 clear anodized finish. Shaping, forming and bending shall be done in a careful manner to protect the surface and finish of the material. The finished work shall have the approval of the Owner before installation of such work.

B. Where aluminum is placed in contact with or fastened to dissimilar metals, with the exception of stainless steel, the aluminum surfaces shall be given a heavy brush coat of alkali-resistant bituminous paint, or shall be isolated by means of rubber or polyethylene sheeting material or gaskets of the type approved by the Owner. Where aluminum is placed in contact with or embedded in concrete, masonry, or plaster, the aluminum surfaces shall be given a heavy brush coat of alkali-resistant bituminous paint or clear methacrylate lacquer.

C. Fastening devices, clips, anchors and other accessories for aluminum work shall be of Type 316 stainless steel.

3.7 SHOP PAINTING

A. After fabrication, all steel items not galvanized shall be thoroughly cleaned of rust, scale, dirt, grease, oil and other foreign matter by sandblasting in accordance with SSPC-SP 6-63.

B. Structural steel and iron materials not submerged to have iron oxide primer 2.5 mils.

C. Castings shall receive one coat of coal tar paint.

D. Embedded Items: Items, except aluminum items, to be embedded in concrete shall not be painted.

3.8 FIELD PAINTING

A. For field painting requirements, see Section 09900, PAINTING.

END SECTION

DIVISION 6 – WOOD AND PLASTICS

SECTION 06900 – FRP GRATING

PART 1 – GENERAL

1.1 SUMMARY

A. Work includes providing fiberglass grating with Type 316L stainless steel bolts and hold downs.

1.2 SUBMITTALS

A. Submit complete, dimensioned shop drawings for each fiberglass grating material required.

B. Submit manufacturer's printed instructions for installation/mounting and for coating cut or damaged areas.

1.3 DELIVERY AND HANDLING

A. Fiberglass material shall be lifted and carried from delivery vehicles.

B. All materials shall be subject to inspection and rejection by the Owner.

C. Material shall be stored off the ground and under cover.

PART 2 – PRODUCTS

2.1 FRP GRATING

A. The grating panels shall be Strongwell DURADEK or DURAGRID, or equal. The grating shall be a combination of fiberglass reinforcements (fibers and mat) and fire retardant polyester resin,, produced by the pultrusion process. Color shall be selected by the Owner.

B. The surface veil on all exposed surfaces shall be an integral part of the pultrusion process to enhance corrosion and UV resistance, and shall be made from material similar to the resin used in manufacturing the part.

C. The top of the grating shall be covered with a permanently bonded grit, baked epoxy, anti-skid surface.

D. Grating shall be able to carry a uniform distributed load of 100 pounds per square foot and not deflect more than 0.25 inch.

E. The cross rods shall consist of a center core wedge and 2 spacer bars that are notched at each bearing bar so that each bearing bar is both mechanically locked and bonded to the web of each bearing bar. The

spacing bars shall be continually bonded to the center core wedge.

F. All panel hold downs and connectors shall be of Type of 316L stainless steel.

G. Curb angles of the same material as the panels or of Type 316L stainless steel shall be provided, where indicated.

PART 3 – EXECUTION

3.1 INSTALLATION

A. Follow all FRP grating manufacturer's installation instructions and recommendations.

B. Wherever a field cut is made, coat the cut ends with resin supplied by the manufacturer.

C. Install saddle clips using Type 316L stainless steel nuts, washers, and threaded fasteners.

D. Holes cut in grating for pipe penetrations shall be banded.

E. Completed work shall bear uniformly on the supporting surface without rocking or otherwise moving.

END OF SECTION

SECTION 09900 – PAINTING

PART 1 – GENERAL

1.1 SCOPE: This item of work shall include the furnishing of all labor, materials, tools and equipment necessary for completing painting work covered in this special provision and as described in the Maui Department of Water Supply Standards, Section 303.27.

1.2 SUMMARY

A. This Section includes the following:

1. Subsurface Preparation
2. Paint System Application

B. Items to be painted shall include, but are not limited to the following:

1. Buildings
2. Exposed piping
3. Exposed electrical conduit

C. Stainless steel, if Type 316, and aluminum items are not required to be painted unless specifically noted. Type 304 stainless steel shall be painted.

1.3 SUBMITTALS

A. Submit product data, including manufacturer's written instructions for evaluating, preparing, and treating substrate, technical data, and tested physical and performance properties of paint system materials.

B. Submit installer certificates signed by paint system manufacturer certifying that contractor is authorized to install the specified system.

C. Submit letter from product manufacturer, stating proposed materials are suitable for the proposed purpose.

D. Submit samples (one foot square each) for each proposed color and texture for approval by the Department before ordering paint, make a minimum of three (3) samples as required to secure desired results. Colors not specified below shall be as specified by the Department. The brushout color samples shall be prepared to show each prior coat.

1.4 QUALITY ASSURANCE

A. The painting contractor shall coordinate the presence of the manufacturer’s representative and shall provide the manufacturer’s representative with a schedule of his work. The schedule shall be updated during the work to meet project requirements.

B. All paint system components shall be from the same manufacturer or the primary painting components manufacturer shall provide a written statement indicating the proposed materials are compatible and acceptable for the performance of the paint system.

C. Paint manufacturer's representative is required to be on-site as often as the representative deems necessary to assure the painted surfaces and the painting are in accordance with the manufacturer's directions.

1.5 DELIVERY, STORAGE, AND HANDLING

A. Deliver materials to project site in original sealed and labeled containers with manufacturer's name, product brand name and type, date of manufacture, and directions for storing.

B. Store materials out of direct exposure to the elements. Store material on a clean, flat and dry surface. Store materials away from open flames, sparks or excessive heat. Cover all materials using breathable cover such as a canvas. Polyethylene or other non-breathable plastic coverings are not acceptable.

C. Handle all materials in such a manner as to preclude damage and contamination with moisture or foreign matter.

D. Upon delivery, Contractor shall examine all containers for damage and have all damage materials removed from the site immediately. Any materials found to be stored in a manner other than stated above will be rejected, removed and replaced at Contractor's expense.

1.6 PROJECT CONDITIONS

A. Do not apply paint system materials in rain, fog or mist, or when such weather conditions are imminent during application. Take adequate precautions to ensure that materials are protected from possible moisture damage or contamination.

B. Provide protection against staining and mechanical damage for newly applied paint system surfaces throughout this project.

C. Debris Removal: Remove all debris daily from the project site and take to a legal dumping area authorized to receive such materials.

PART 2 – PRODUCTS

2.1 PAINT SYSTEM MATERIALS

A. All primer, intermediate and finish coat materials shall be from the Approved Materials List of Division 400, Section 402 of the Water System Standards, 2002 for Section V. Paints and Coatings.

B. The selected paint system materials shall be listed in the substrate and condition subheading describing the project conditions for the substrate to be painted and applicable to the Island of Maui.

PART 3 – EXECUTION

3.1 EXAMINATION

A. Examine substrate, areas, and conditions, with Installer present, for compliance with requirements and other conditions affecting performance.

B. Verify that substrate has cured and aged for minimum time period specified prior to applying the paint system.

C. Proceed with installation only after unsatisfactory conditions have been corrected.

3.2 SURFACE PREPARATION

A. Before applying paint or other finish, remove or provide ample protection for hardware, plates, light fixtures, and similar items. Replace/uncover upon completion. Employ skilled craftsmen for removing and reinstalling removed items.

B. All metal surfaces to be painted shall be dry, clean and free from dirt, oil, grease, rust, scale or other foreign matters. Contractor is required to follow the Department specifications and the paint manufacturer's recommendation.

C. Concrete surfaces shall be at least one month old, dry, clean, and free of dust, paint, plaster, oils, waxes, curing compounds, and other marks and discolorations at time of painting.

D. Contractor is responsible for defective work from all causes, including unsuitable and improperly prepared surface. Prime all surfaces as required by finish coat manufacturers.

E. Apply seal coat (i.e., tar stop) on ductile iron surfaces as necessary to prevent bleed through of asphalt coating.

3.3 MIXING AND THINNING

A. Proprietary products will not negate any warranty of the paint. Mix and thin in strict accordance with manufacturer's printed directions under direction of manufacturer's representative.

B. Mix and thin other materials in accordance with standard practice, and as approved by the manufacturer.

3.4 APPLICATION

A. Workmanship shall be of the highest quality, by skilled workers, in accordance with best trade practices. Spread material evenly, without runs or sags. Cut sharp lines against other materials. Vary shades of successive coats to insure full coverage. Prime backs of frames and trim with sealer or paint. Allow ample time between coats for thorough drying. Rate of application shall be in strict conformance with manufacturer's direction or as specified in the Water System Standards, whichever is greater.

B. Contractor shall be responsible for correcting defective work, regardless of cause. Contractor shall refinish at no addition cost to the owner. Repair work damaged during construction. Leave in first class condition at time of final acceptance.

C. Paint thickness shall be 6 mil minimum dry film thickness, unless otherwise specified or recommended by the paint manufacturer. Painting shall be at rates of application per layer in strict accordance with the manufacturer's direction to achieve the total dry film thickness specified.

END SECTION

SECTION 09910 – EPOXY COATING

PART 1 – GENERAL

1.1 SUMMARY

A. General Requirements: Work includes surface preparation and field application of epoxy coating to interior surfaces of concrete tanks and pump stations used for treatment of the wastewater.

1.2 SUBMITTALS

A. Product and material descriptions, manufacturer's application, installation instructions, and written evidence that products have a minimum of 5 year history of being used successfully for coating of concrete in contact with wastewater.

B. Certificate or written evidence that the applicator of coating system is factory trained. The Contractor shall provide a copy of certificate acknowledging training of each applicator by the manufacturer.

1.3 DELIVERY, STORAGE, AND HANDLING

A. Deliver products to site in sealed and labeled containers; inspect to verify shelf life condition and acceptability.

B. Container label to include manufacturer's name, type of coating, brand name, lot number, brand code, coverage, surface preparation, drying time, cleanup requirements, color designation, and instructions for mixing and reducing.

C. Store coating materials at minimum ambient temperature of 45 degrees F and a maximum of 90 degrees F, in ventilated area and as required by manufacturer's instructions.

1.4 ENVIRONMENTAL REQUIREMENTS

A. Do not apply materials when surface and ambient temperatures are outside the temperature ranges required by the paint product manufacturer.

B. Do not apply coatings during rain or when relative humidity is outside the humidity ranges required by the product manufacturer.

PART 2 – PRODUCTS

2.1 MATERIALS

A. The epoxy coating shall be suitable for application over damp or dry concrete surfaces, and on vertical and overhead surfaces. When cured, the coating shall provide an impermeable, high strength, lining for manholes resistant to infiltration and attack from hydrogen sulfide and acid generated by microbiological sources. The epoxy coating shall be one of the following:

i. Raven 405: A high strength, 100% solids, solventless two-component epoxy resin system for spray application. The coating material shall be thixotropic in nature and filled with select fillers to minimize permeability and provide sag resistance in conformance with these specifications. Flexural strength (ASTM D790) shall be a minimum of 12,000 psi. Compressive strength, yield (ASTM D695) shall be a minimum of 12,800 psi. Tensile strength (ASTM D638) shall be a minimum of 6,600 psi. Bond strength (ASTM D4541) shall be to concrete substrate failure.

ii. Sauereisen Sewergard 210T: An impermeable, high strength, three-component system consisting of a two-component epoxy resin and a fine silica sand filler for trowel application. Flexural strength (ASTM C580) shall be a minimum of 4,900 psi. Compressive strength (ASTM C579) shall be a minimum of 7,300 psi. Tensile strength (ASTM C307) shall be a minimum of 2,200 psi. Bond strength (ASTM D4541) shall be to concrete substrate failure.

iii. Sauereisen Sauereisen 210S: An impermeable, high strength, three-component system consisting of a two-component epoxy resin and a fiber filler for spray application. Flexural strength (ASTM C580) shall be a minimum of 4,600 psi. Compressive strength (ASTM C579) shall be a minimum of 6,800 psi. Tensile strength (ASTM C307) shall be a minimum of 2,500 psi. Bond strength (ASTM D4541) shall be to concrete substrate failure.

PART 3 – EXECUTION

3.1 CLEANING

A. All concrete surfaces to which epoxy coating will be applied must first be cleaned in accordance with the recommendation of the manufacturer of the coating.

3.2 SURFACE INSPECTION

A. Contractor shall inspect all surfaces to be coated prior to application of the coating. The engineer shall be notified of any concerns with the surface that may interfere with proper application of the coating. Verify site conditions prior to start of work covered by this section.

3.3 APPLICATION

A. The epoxy topcoat shall be applied in accordance with the manufacturer's recommendations. Surfaces to be coated shall include the entire surface of the tank walls from the base up to the top, and the entire surface of the tank bottom. The edge of the epoxy coating around pipe penetrations not protected by grout shall be provided with an edge seal along the edge of the coating of the sewer pipe. The edge seal shall consist of an epoxy filled embedded thickened edge created by filling a minimum 1/8-inch wide by minimum 1/4-inch deep groove cut into the concrete around the pipe.

The epoxy coating shall be applied to the flowing minimum dry film thicknesses:

Raven 405: 90 mils

Sauereisen Sewergard 210T: 125 mils

Sauereisen Sewergard 210S: 90 mils

These minimum thicknesses are applicable to properly prepared smooth surfaces with a finish of 60-grit sandpaper. Thicker coatings as recommended by the coating manufacturer shall be provided if a finish of 60-grit sandpaper is not provided.

B. The coating shall be applied by workmen trained and experienced with the product used and by equipment approved by the product supplier.

3.4 TESTING

A. After the epoxy coating has set hard to the touch, the coating shall be tested for pinholes with high-voltage pinhole detection equipment. An inducted pinhole shall be made on to the coated concrete surface and shall serve to determine the minimum/maximum voltage to be used to test the coating for pinholes at that particular area. The spark tester shall be initially set at 100 volts per 1 mil (25 micron) or film thickness applied but may be adjusted as necessary to detect the induced pinhole. All detected pinholes shall be marked and repaired by abrading the coating surface with grit disk paper or other hand tooling method. After abrading and cleaning, additional protective coating material shall be hand applied to the repair area. All touch-up/repair procedures shall follow the protective coating manufacturer's recommendations. The pinholes and other defects shall be repaired at no additional cost to the Owner.

END SECTION

SECTION 11000 – GENERAL EQUIPMENT REQUIREMENTS

PART 1 – GENERAL

1.1 SUMMARY

A. General Requirements: This section covers general mechanical requirements applicable to all mechanical equipment specified herein, or indicated on the drawings. Detailed mechanical requirements are covered in the individual sections for each item of equipment.

1.2 MECHANICAL EQUIPMENT

A. General

i. The Contractor shall furnish, assemble, install and test all the mechanical equipment, including all labor, materials, accessories and incidental work necessary to complete the operation. The installation of the equipment shall be in conformance with the drawings, descriptive bulletins and specifications furnished by the manufacturer covering the installation of the equipment. Installed equipment shall be complete and ready to perform its intended function. All equipment supplied shall be of a dimension whereby it can removed/replace through doorways on the building, e.g., equipment submitted for approval shall not be installed on the building floor prior to completion of the building to assure the ability to remove equipment at a later date. The Contractor is required to ensure that the various items of equipment furnished can be connected or otherwise assembled to each other. He shall insure that clearances are correct, bolt centers match, adjacent fittings can be connected, and otherwise provide appropriate coordination. If the Contractor deviates from the equipment or details shown, he shall be responsible to insure that substituted equipment or details physically fit their assigned locations. In certain cases, a particular manufacturer's product has been specified. This has been done where existing equipment is being extended and parts must, therefore, be interchangeable and matched. Equipment shall be a product of a manufacturer who maintains a service organization in the State of Hawaii. It is intended that service be available through representatives in the State, in order to maintain continuity of plant operation.

B. Installation of Equipment

i. Special care shall be taken to ensure proper alignment of all equipment, with particular reference to the pumps and electric drives. The units shall be carefully aligned on their foundations by qualified millwrights after their sole plates have been shimmed to true alignment at the anchor bolts. The anchor bolts shall be set in place and the nuts tightened against the shims. After the foundation alignments have been approved by the Owner, the bedplates or wing feet of the equipment shall be securely bolted in place. The alignment of equipment shall be further checked after securing to the foundations, and after confirmation of all alignments, the sole plates shall be finally grouted in place. The Contractor shall be responsible for the exact alignment of equipment with

associated piping and, under no circumstances will "pipe springing" be allowed. All wedges, shims, filling pieces, keys, packing, or other materials necessary to properly align, level and secure apparatus in place shall be furnished by the Contractor. All parts intended to be plumb or level must be so proven to the Owner. Any grinding necessary to bring parts to proper bearing after erection shall be done at the expense of the Contractor. A manufacturer's representative shall supervise the installation, when so specified, in the particular section covering the item of equipment being installed.

C. Tools

i. For each type of equipment to be furnished by him, the Contractor shall provide all special tools (including grease guns or other lubricating devices) which may be necessary for the adjustment, operation and maintenance of such equipment. Each special tool shall be labelled for its piece of equipment. All special tools shall be purchased and delivered to the Owner at the project site.

D. Spare Parts

i. A complete set of spare parts, recommended by the manufacturer, shall be delivered to the Owner for each item of equipment. Parts shall be packaged and conspicuously marked. The list of spare parts by items of equipment shall be submitted to the Owner for approval. After approval, the spare parts lists shall be bound in a three ring binder with separation sheets between each piece of equipment and an index.

E. Guides, Inserts, Anchors, Bolts and Appurtenances

i. The Contractor shall furnish and install all necessary guides, inserts, anchors and assembly bolts, all field welding and all other appurtenances required for the installation of the devices included in the equipment items. Anchors and assembly bolts shall be of ample size and strength for the purpose intended. All steel bolts shall be Type 316 stainless steel standard machine bolts with Type 316 stainless steel hexagonal nuts. Where close make-up dimensions are required, or where the Owner may direct, equipment anchor bolts shall be set in pipe sleeves with a nominal diameter equal to at least twice the diameter of the anchor bolt. All other bolts set in the forms shall be held in position by a nut on each side of the form.

F. Belt-Driven Equipment

i. The Contractor shall provide an approved belt guard for all belt-driven equipment. Unless specified otherwise, each belt-driven unit shall be furnished with two (2) additional sets of spare belts.

G. Drive Coupling

i. The Contractor shall provide flexible shaft couplings and coupling guards for all direct-connected equipment.

H. Packing and Mechanical Seals

i. The Contractor shall furnish two (2) complete sets of spare packing rings, where applicable, for each piece of equipment. Where mechanical seals are specified, the Contractor shall provide one spare mechanical seal for each such unit.

1.3 SUBMITTALS

A. Manufacturer's Data

i. Before executing any work, the Contractor shall submit, for approval, 4 copies of information sufficient to evidence full compliance with the contract requirements. Two (2) copies will be returned to the Contractor with whatever comments are appropriate, together with a statement of action required by the Contractor. Such information shall be submitted for all materials and equipment the Contractor proposes to furnish for accomplishment of the contract work. Submittals for manufactured items shall be manufacturer's descriptive literature, shop drawings, diagrams, performance and characteristic curves, and catalog cuts that include the manufacturer's name, trade name, catalog model or number, nameplate data, size, layout dimensions, capacity, specification reference, applicable Federal and Military specification references, and all other information necessary to establish contract compliance. No equipment or materials shall be shipped until the manufacturer's shop drawings and specifications, or other identifying data assuring compliance with these specifications, are approved by the Owner. Additional detailed submittal requirements are given in each equipment section.

B. Manufacturer's Warranty

i. As part of the submittal of manufacturer's data, the Contractor shall obtain from the manufacturers, and submit to the Owner, written warranties for all mechanical and electrical equipment to be supplied for this project. The warranties shall guarantee units to remain free from defects in workmanship and materials for a period of one year, or longer where so specified, after final acceptance of the project by the Owner. Normal wear shall not constitute defects. Any unit found to be defective, as defined herein, shall be replaced by the Contractor, including installation, without cost to the Owner.

C. Layout Drawings

i. The Contractor shall submit, for approval, consolidated equipment room drawings in plan, elevation and sections, identifying and indicating proposed location of principal items of equipment, accessories, piping, ductwork and other similar items. Drawings shall demonstrate proposed location and adequate clearance for operation, maintenance and replacement of operating devices and equipment. If any equipment is disapproved, drawings shall be revised to show acceptable equipment and resubmitted. A dimensional foundation plan shall be submitted with all equipment requiring anchor bolts.

D. Standard Compliance

i. Where equipment or materials are specified to conform to requirements of the Standards of organization such as ASME, UL, AGA, ARI, etc., the Contractor shall submit a copy of the referenced standards and proof of such conformance. The label or listing of the specified agency will be acceptable evidence. In lieu of the label or listing, the Contractor may submit a written certificate from a nationally-recognized testing organization adequately equipped and competent to perform such services, stating that the items have been tested and that the units conform to the specified standard. The Contractor shall obtain written approval from the Owner to allow a specific testing organization to substitute the label or listing if the Contractor chooses not to go with standard organizations.

E. Pump Curves

i. Shop drawings for all pumps shall include a certified pump performance curve, dated and signed by an authorized employee of the manufacturer showing the pump characteristics from the shutoff head to the full range of the pump.

F. Operation and Instruction Manuals

i. Three copies of the manual shall be submitted at least 2 months prior to operational testing of the equipment. The manual will be reviewed for compliance with specifications. If the Engineer, upon reviewing the manual, determines that the manual is acceptable, all 3 copies will be retained. Three additional identical copies shall be submitted. However, if the Engineer determines that the manual does not comply with the specifications, a marked-up copy of the manual will be returned to the Contractor for revisions and/or additions. Contractor shall revise the manual accordingly and submit three (3) copies of the final manual to the Engineer for acceptance prior to final application for payment. For equipment put into use with Owner's permission during construction, submit manual within 10 days after first operation. Start of warranty period shall be date of final acceptance of the item by the Owner.

ii. Format of manual shall be 8-1/2 x 11 inch three-ring side binders with durable plastic covers. Correlate the date of separate binders into related consistent groupings. Provide fly-leaf with indexed tabs for each separate product, or each piece of equipment. Identify each volume with typed or printed label "OPERATION AND MAINTENANCE INSTRUCTIONS" and title of project and identity of general subject matter. Submit a sample binder with fly leaf and index tabs.

iii. The manual shall include, but not be limited to, the following: System layout showing piping, valves and controls; wiring and control diagrams with data to explain detailed operation and control of each component; a control sequence describing start-up, operation and shut-down; detailed description of the function of each principal component of the system; procedure for starting; procedure for operating; shut-down instruction, installation instruction; maintenance and overhaul instructions, lubrication schedule including type, grade and temperature range, and frequency; safety precautions, diagrams,

and illustrations; test procedures; performance data; warranties and parts list. Warranty for all equipment shall be at least for one year, unless specified otherwise in individual specification sections; and shall commence at the time of final acceptance. It is intended that the manual shall be complete in all respects for all equipment, controls, accessories, and associated appurtenances provided. Each manual shall be bound in a loose leaf binder with hard covers. Final payment will not be made until all manuals are received.

G. Operating Instructions

i. Printed operating instructions for use by operating personnel shall be provided for each equipment component specified. The instructions shall include, but not be limited to, the following: Start-up; proper adjustment; operation; lubrication; shut-down; safety precautions; procedure in the event of equipment failure; and any other necessary items of instruction as recommended by the manufacturer of the unit. Three (3) copies shall be provided in addition to those in the Maintenance and Operation Manual. Each instruction shall be bound in heavy transparent plastic sheet protectors.

1.4 SHIPPING, HANDLING AND STORAGE

A. All items of equipment shall be packaged for overseas shipment using appropriate materials to prevent damage by corrosion and improper handling. Equipment shall be stored indoors away from sources of damage. If there is not adequate on site storage, the Contractor shall provide secure, indoor off-site storage at no additional cost to the Owner. Material shall be delivered and unloaded using appropriate lifting and hauling procedures. Material must not be dropped, twisted, bent or otherwise stressed beyond its strength limits. Any item of equipment which, in the opinion of the Owner, has become so damaged that it cannot be expected to have its designed useful life, shall be removed from the site and replaced with a new item. Any item of equipment which becomes damaged and is proposed for repair, will be accepted if and only if, the Owner, at his sole discretion, decides the repairs are acceptable. If he finds the repairs unacceptable, the damaged equipment shall be removed and replaced with new equipment at no additional cost to the Owner.

1.5 STANDARD PRODUCTS

A. Materials and equipment shall be essentially the standard cataloged products of manufacturers regularly engaged in production of such materials or equipment and shall be manufacturer's latest standard design that complies with the specification requirements. Where two units of the same class of equipment are required, these units shall be products of a single manufacturer; however, the component parts of the system need not be the products of the same manufacturer. Each major component of equipment shall have manufacturer's name, address and model and serial number on a nameplate securely affixed in a conspicuous place; nameplate of the distributing agent will not be acceptable.

1.6 SHOP COATING

A. Shop coating shall conform to the requirements of Section 09900, PAINTING, except as modified in the applicable section. The manufacturer's surface preparation and shop coatings must conform to these specifications. Manufacturer's standard coatings are not acceptable unless specifically stated to be acceptable.

1.7 SAFETY REQUIREMENTS

A. Belts, pulleys, chains, gears, couplings, projecting setscrews, keys and other rotating parts, located so that any person can come in proximity thereto, shall be fully enclosed or properly guarded. High-temperature equipment and piping, so located as to endanger personnel or create a fire hazard, shall be properly guarded or covered with insulation. Items such as catwalks, ladders and guardrails shall be provided where required for safe operation and maintenance of equipment.

1.8 ELECTRICAL REQUIREMENTS

A. Electrical components of mechanical equipment and systems such as motors and controls shall be provided under this Division and shall be as specified hereinafter, and as necessary for complete and operable systems. Extended voltage range motors will not be permitted. Interconnecting wiring for components of packaged equipment shall be provided as an integral part of the equipment. All interconnecting power wiring and conduit for field erected equipment, and control wiring, shall conform to the requirements of Division 16.

B. Motors

i. Except where otherwise noted, drive motors of 1 HP and greater shall be 460 volt, 3 phase, 60 Hertz service; 1/2 HP and 3/4 HP shall be suitable for 200 volt, 3 phase, 60 Hertz service; motors 1/3 HP or smaller shall be suitable for 115 volt, 60 Hertz, single phase service. All motors shall comply with National Electrical Manufacturers' Association (NEMA) standards. Service Factor to be 1.15. Premium efficiency motors, as determined by IEEE Standard 112 Method B, shall be acceptable, unless noted otherwise. Motor types are specified in the appropriate technical sections. All motors shall be furnished with tropical protection that shall include the following:

a. Special Insulation: For protection against fungus, corrosion and excessive moisture.

b. Screens: All openings shall be covered by screens for protection against insects, vermin and rodents.

c. Corrosion Treatment: Metal surfaces shall be treated for protection against fungus, insects and corrosion.

C. Strip Heaters

i. Motors 5 HP or greater shall be equipped with strip heaters installed by the manufacturer in such a way that the strip heaters are activated when the motor is not operating and are deactivated when the motor is operating.

D. Motors, drives and pumps shall be designed and built for 24-hour continuous service at any and all points within the required range of operation without overheating, cavitating or experiencing excessive vibration/strain.

E. Nameplates shall be provided for all equipment, including motors. Nameplates shall include, as a minimum, equipment manufacturer's name, model number, serial number, capacity, head, speed, horsepower, input voltage, amps, number of cycles and power and service factors.

1.9 LEAKAGE TESTS

A. Where work to be constructed is specified in the technical sections to meet certain minimum test requirements for water, gas, or air leakage, the following general provisions shall apply:

i. The Contractor shall furnish the water, gas, or air and suitable temporary service connections, testing plugs or caps, pressure pumps, pipe connections, air compressors, meters, gauges, thrust supports and other equipment and all labor required for testing.

ii. No testing water, gas, or air shall be injected into any unit, nor shall tests be commenced, without the approval of the Owner, and all testing shall be conducted in the presence of the Owner or his authorized representative.

iii. If any test shows leakage that exceeds the limit specified, the unit shall be emptied, and the defects repaired by means approved by the Owner. The tests shall then be repeated and repairs made until the leakage is reduced to less than the stipulated amount.

1.10 GREASE, OIL, FUEL, AND CHEMICALS

A. The Contractor shall furnish all necessary grease, oil, fuel, electric power, and chemicals for all tests and operating demonstrations made on equipment. The Contractor shall furnish a year's supply of required lubricants, including grease and oil of the type recommended by the manufacturer for all equipment supplied under Divisions 11, 15, and 16.

1.11 SERVICES OF MANUFACTURER’S REPRESENTATIVE

A. Where specified, the Contractor shall include, in his bid, the cost of a qualified representative designated, in writing, by the manufacturer to supervise the installation, adjustment and testing of the equipment, and to instruct the plant operating personnel on operation and maintenance. This supervision will be divided into two or more periods as required by the construction progress, or as ordered by the Owner. The cost

of such service, including the manufacturer's charges, transportation to the project site, per diem rates, and any other expenses incurred shall be paid by the Contractor. The time required on the site is specified in the various technical sections. The Owner shall receive advance notice of each visit 14 calendar days before visit occurs. The manufacturer's representatives must be present during the 7-day operational testing period specified in paragraph 1.17 of this section.

1.12 TRAINING

A. A training schedule shall be submitted to the Owner not less than four (4) weeks prior to the first training session. The Owner must approve this schedule, before it is finally implemented. During the full facility operational testing by the Contractor, the Contractor shall make available manufacturer's representatives of all the various pieces of equipment who shall instruct the Owner's staff in the operation and care thereof. Instruction shall include, but not be limited to: system debugging; startup; maintenance procedures; troubleshooting; and system operation. Instruction shall be in sufficient detail to satisfy the Owner and Engineer that all requirements have been met. An instruction outline (lesson plan) shall be presented to the Engineer two weeks prior to the instruction. All manufacturer's instructions shall be provided in writing. The Contractor shall furnish a sign-off form identifying who gave the instruction, when it was given, the duration of the instruction, and who attended. The form shall be signed by the manufacturer's representative and the Owner's senior personnel attending.

1.13 INSPECTION AND PREOPERATIONAL CHECK-OUT

A. Before initiating any pre-operation check-out procedures, the Contractor shall furnish the Engineer with a Pre-Operation Check-out Certificate from the manufacturer's representative certifying that the items of equipment have been installed, adjusted, calibrated, and aligned to the representative's satisfaction.

B. Preoperational check-out procedures shall incorporate all requirements of these Specifications and shall proceed in a logical, stepwise sequence to ensure that all equipment has been properly serviced, aligned, connected, calibrated, and adjusted prior to operation. Preoperation check-out procedures shall include, but is not limited to, the following:

i. Ring-out of all power, control, monitoring, and control circuits prior to connection.

ii. Voltage check of all circuits.

iii. Phase sequence check.

iv. All connecting pipelines checked for cleanliness.

v. Alignment check of all connected machines.

vi. Pressure and vacuum testing of all closed systems.

vii. Preoperation lubrication.

viii. Alignment check of all connecting pipelines.

ix. Calibration of all safety equipment, including fuses, temperature, pressure, level, vibration, flow switches, etc., and all visual monitors including gauges, thermometers, etc.

x. Complete check-out, through simulated operating conditions, of all safety circuits and devices.

xi. Manual rotation and/or movement of all moving parts to ensure freedom of movement and correct direction of rotation. Exercise all valves and gates.

xii. Check that all valves are correctly oriented and in their correct operating mode.

xiii. Check that all equipment meets all OSHA requirements as to guards, clearances, etc.

Any equipment that must be used to test other parts of the work must first be successfully tested itself before it is used in any other test procedure.

1.14 START-UP

A. Startup of equipment and system shall be carried out only after inspection and preoperational check-out has been performed and the results are reviewed and found satisfactory by the Engineer. Startup shall be the readiness of equipment or systems so that initial operations and field testing may proceed. Equipment or systems shall be operated for a sufficient length of time to check rotation, pressure, excessive vibration, and proper initial operation. All pumps shall be tested for conformance to efficiency and performance curves.

1.15 INITIAL OPERATIONAL TESTS

A. Once all affected equipment has been satisfactorily subjected to the required inspection and preoperational check-out procedure and startup, and the Engineer has witnessed that portion of the testing, individual systems may be started and operated under simulated operating conditions. These conditions shall include all modes of operation to determine as nearly as possible whether the equipment and systems meet the requirements of these Specifications. The equipment shall be operated for a sufficient period of time to determine equipment operating characteristics, including temperatures and vibration, to observe performance characteristics, to demonstrate that the equipment and systems comply with the manufacturer's submittal data, to ensure the capacity, efficiency, vibration, and other performance requirements of the Contract are satisfied, and to permit initial adjustment of operating controls.

B. Operational tests shall not be performed until auxiliary systems such as flushing or cooling water or control air are tested and are in service.

C. Once initial operational tests have been satisfactorily completed, all equipment shall be rechecked for proper alignment, realigned if necessary, and checked for loose

connections, unusual movement, or other indications of improper operating characteristics. Any deficiencies shall be corrected. All equipment or devices which exhibit unusual or unacceptable operating characteristics shall be disassembled and inspected, repaired, or removed from the site and replaced at no additional cost to the Owner.

1.16 FIELD TESTS

A. Field tests shall be performed on material, equipment, and systems as specified herein only after: an acceptable startup of the item and related systems; and acceptable initial operational tests. Field tests shall be performed after all initial operation adjustments and calibration has been performed. A testing schedule must be submitted by the Contractor and approved by the Owner at least three weeks prior to testing.

1.17 FULL FACILITY OPERATIONAL TEST BY CONTRACTOR

A. Upon satisfactory completion of all operational testing and field testing of equipment and systems, and all deficiencies corrected and retested to the satisfaction of the Engineer, the Contractor shall place the completed facility in full operation. The Contractor shall be responsible for the operation of the facility. The Contractor shall supply all necessary labor and assistance for successful operation of the facility.

B. The Contractor shall coordinate and be responsible for the operation of the facility for a minimum of three (3) consecutive twenty four (24) hour days of trouble-free operation, using all possible equipment to demonstrate that the system operates as a complete unit. The Contractor shall be responsible for all adjustments, maintenance, oiling, lubrication, and operation of the complete facility for the three (3) days of operation, or if faults, deficiencies, or failures in any equipment occur for as long a period as necessary to provide three (3) consecutive days of trouble-free operation after these have been corrected, adjusted, modified, or removed and replaced to the satisfaction of the Engineer.

C. All lubricating oils, lubricants, chemicals, and labor charges other than labor charges for the Owner's operating staff necessary to operate the plant for the three (3) day operation period shall be borne by the Contractor.

D. In the event that any item of installed equipment is damaged or fails to meet the above tests, then all repeated or continued testing operations, corrections, modifications, adjustments, and/or replacements shall continue or be repeated as often and as long as necessary to make the system operational as specified, at no additional cost to the Owner.

PART 2 – PRODUCTS

NOT APPLICABLE

PART 3 – EXECUTION

NOT APPLICABLE

END SECTION

SECTION 11052 – AUTOMATIC REFRIGERATED SAMPLERS

PART 1 – GENERAL

1.1 SUMMARY

A. General Requirements: The contractor shall furnish and install automatic sampling units including automatic wastewater samplers, refrigerated sample collectors, and sampling chambers and all necessary piping, pumps, connections, controls, mounts, valves, motors, and appurtenances for a complete and operable installation, in accordance with the requirements of the Contract Documents.

1.2 RELATED WORK

A. Section 11000 General Equipment Requirements

1.3 REFERENCES

A. Comply with the applicable reference specifications as specified in the general requirements

B. Commercial Standards:

SSPC-SP-6 Steel Structures Painting Manual, 1982/85

1.4 SUBMITTALS

A. Submittals shall be made in accordance with the general requirements.

B. Complete data and shop drawings with detailed specifications for all samplers, refrigerated sample collectors, and manufacturer's published specifications and recommendations for powdered epoxy coating shall be submitted for approval prior to ordering of equipment.

1.5 MANUFACTURER’S REPRESENTATIVE

A. The contractor shall provide the services of a qualified representative of the manufacturer for not less than one day to check the installed units and instruct the city's operating personnel.

PART 2 – PRODUCTS

2.1 SAMPLERS

A. General

i. Each sampler shall be a self-contained, factory pre-wired, floor-standing unit with the sampler located above the refrigerated sample collector. The

sampler shall be the vacuum/pressure or peristaltic pump type. Each unit shall be mounted in a frame or cabinet that provides a minimum of one inch of clearance between the floor and the bottom of the refrigerated sample collector.

B. Sampling Capacity

i. Each sampler shall be capable of drawing a liquid sample a vertical height of 20 feet through a minimum 3/8-inch inside diameter tube at a rate not less than 3 ft/sec.

C. Power Supply

i. Each sampler shall operate on 115-volt, single-phase, 60-Hz power, and it shall be supplied with a waterproof electrical junction box attached to the exterior for pickup of power, with power cord and plug, flow signal, status signal, and grounding wires.

D. Enclosure

i. Each sampler/controller shall be enclosed in a watertight coated steel, stainless steel, or reinforced fiberglass cabinet and shall comply with NEMA [4 or 6] specifications. The cabinet shall contain access doors with locking mechanism. All equipment within the cabinet shall be easily accessible for maintenance.

E. Sample Tubes

i. Each sampler shall be equipped with a length of vinyl, Teflon, or black PVC nylon-reinforced flexible plastic tubing suitable for connection with the sampling chamber. Inside diameter of the tubing shall not be less than 3/8-inch. The tubing shall be connected using stainless steel hose clamps.

F. Operating Modes

i. Each sampler shall be capable of operating in any of the following 3 modes:

a. Flow proportional basis from an external signal.

b. Time proportional basis from an internal timer.

c. Manual basis by activation of a switch on the sampler.

G. Sampling Cycles

i. Each sampler shall be capable of taking a sample from 50 ml to 500 ml per sampling cycle. The sampling cycle shall be initiated by the external flow

signal, or from the internal timer, or by the manual switch and shall involve the following processes in the specified order:

a. The 3-way or 4-way solenoid valve or pump shall operate to purge the sample line with compressed air.

b. At a preset time, the solenoid valve or pump shall switch the compressor line to create a vacuum in the sample line and metering chamber (if any), to cause the sample to flow to and fill the metering chamber.

c. If necessary (with metering chamber), air pressure shall be applied to the metering chamber and sample line to vent excess sample from the metering chamber and leave a predetermined volume in the metering chamber.

d. The contents of the metering chamber shall be discharged into the refrigerated sample collector.

e. After re-purging the suction line, all electrical timers, switches, and valves shall reset to the appropriate settings to begin another sampling cycle.

H. Sample Correction for Vacuum/Pressure Type

i. The above-specified procedures shall not require more than 5 minutes. In the event that insufficient sample volume is taken during step (2) of the above procedures, such that the metering chamber is not filled, the sampler shall return to step (1) of the sampling process and shall not proceed to step (3) until the metering chamber has been filled.

I. Control

i. Flow signals to the sampler shall be 4:20 mA converted as required within the sampler. The sampler shall be capable of operation from the flow signal.

J. Timer

i. The internal timers shall be capable of initiating the sampling sequence after a preset time has elapsed. This preset time shall be variable from 4 minutes to minimum 12 hours.

K. Status Monitoring

i. Each sampler shall be provided with a dry set of electrical contacts for operational status monitoring, closing at the start of the sampling sequence, and remaining closed until the entire sampling sequence has been completed. The electrical contacts shall be rated for 5-amps, 115-volts continuous duty.

2.2 REFRIGERATED SAMPLE COLLECTOR

A. Each refrigerated sample collector shall be located below its respective sampler. If not supplied as one unit, the sampler and refrigerated sample collector shall be securely attached to each other and the assembly of both rigidly attached to the foundation. Each refrigerated collector shall have the capacity to hold a 5-gallon container. The container shall have two carrying handles and fully removable lids for cleaning. The container shall be constructed of polyethylene plastic or stainless steel, cylinder shaped. Each refrigerated collector shall be capable of maintaining a temperature in the collector compartment between 4 degrees C and 10 degrees C and shall operate on 115 Volt single phase 60-Hz power. The sampler control will automatically shut down when the collector is full.

2.3 SAMPLING PUMPS

A. General

i. Each sampler shall be equipped with a sampling pump to alternately produce a suction and a pressure condition in the sampling line, as outlined above.

B. Pump Design and Construction

i. Each pump shall be of the peristaltic or positive displacement type with a capacity, suction lift, and discharge head sufficient for the sampling system of the unit. The pump shall be one of the following types:

a. A progressing cavity pump with cast iron body, chrome-plated steel rotor, Buna "N" stator, mechanical carbon and ceramic seal, and flexible coupling.

b. A peristaltic pump made of reinforced engineering plastic for corrosion resistance.

c. A diaphragm pump with valves made of stainless steel.

C. Pump Motor

i. Each motor shall be 1800 rpm, TEFC and shall not be overloaded when the pump is operated at any point on the H/Q curve within the recommended operating range of the pump. The motor shall operate on 115-volt, single-phase, 60-Hz power.

2.4 ACCESSORIES

A. Spare Parts

i. Each sampler shall be furnished with one year's supply of the manufacturer's suggested spare parts and any other elements subject to wear or frequent

replacement. All parts shall be properly labeled and identified with the name and number of the equipment to which they belong. Spare parts shall be submitted according to the provisions of Section 11000 "Equipment General Requirements."

B. Tools

i. The contractor shall supply one complete set of special wrenches or other special tools necessary for the assembly, adjustment, and dismantling of the equipment. All tools shall be of best quality and furnished in labeled tool boxes of suitable design.

2.5 MANUFACTURERS

A. American Sigma, model 704

B. Isco, Inc., model 2910R

C. Quality Control Equipment Co., model “Century 2581”

D. Sirco Controls, model B/ST-VS

(Sampling chamber, if required, waste drains, and sampling line shall be fabricated by the CONTRACTOR.)

PART 3 – EXECUTION

3.1 SAMPLER INSTALLATION SCHEDULE

A. Samplers shall be installed in locations identified as follows:

Identification Number	Location	Sample
SP-0150	Headworks	Influent
SP-0950	After UV units	R-1 water

3.2 PROTECTIVE COATING

A. Fasteners

i. All anchor bolts, nuts, and washers shall be 316 stainless steel.

B. Surface Preparation

i. All steel surfaces of samplers and refrigerated sample collectors shall be blast cleaned in the shop to a commercial blast cleaned surface conforming

to SSPC-SP-6. All dust shall be removed prior to coating. Surfaces shall be coated the same day sandblasting is performed.

C. Protective Coating

i. All steel surfaces of samplers, refrigerated sample collectors and supporting framework, if any, shall be shop coated with a baked epoxy powder coating to a minimum dry film thickness of 12 mils. Powder coating shall be applied by the fluidized bed or electrostatic spray method by qualified, experienced personnel. Oven curing shall conform to the recommendations of the epoxy powder manufacturer. Interior surfaces of samplers and sample collectors shall be white. The exterior color shall be as directed by the engineer.

D. The contractor is cautioned to use care during installation to avoid damage to the protective coatings on this equipment. If the coating is damaged during installation, the contractor will be required to return the equipment to the manufacturer for recoating. Field touchup will not be acceptable.

3.3 OPERATIONAL TESTS

A. Upon completion of the installation, each piece of equipment and each system shall be field-tested for satisfactory operation without excessive noise, vibration, overheating, etc. All equipment must be adjusted and checked for misalignment, clearances, supports, and adherence to safety standards.

END SECTION

SECTION 11210 – PUMPS (GENERAL)

PART 1 – GENERAL

1.1 SUMMARY

A. General Requirements

i. The contractor shall furnish and install all tools, equipment, materials, and supplies and shall perform all labor necessary for the installation, testing, and placing into operation of all pumps and pumping appurtenances, complete and operable, in accordance with the requirements of the Contact Documents.

ii. The provisions of this Section shall apply to all pumps and pumping equipment specified, except where otherwise specified in the Contract Documents.

iii. The contractor shall assign to a single manufacturer full responsibility for the furnishing and functional operation of the complete pump system including the pumps, drives, drive motors, speed control equipment (where variable speed drives are required) and accessories. The designated single manufacturer, however, need not manufacture more than one part of the unit (pump, or motor and drive), but shall coordinate the design, assembly, testing, and erection of the unit(s) as specified herein.

1.2 REFERENCES

A. Comply with the applicable Reference Specifications as specified in the General Requirements.

B. Commercial Standards:

ANSI B16.1	Cast Iron Pipe Flanges and Flanged Fittings, Class 25, 125, 250, and 800.
ANSI B16.5	Pipe Flanges and Flanged Fittings, Steel Nickel Alloy and Other Special Alloys.
ANSI/ASME B31.1	Power Piping.
ASTM A 48	Specification for Gray Iron Castings.
ASTM A 470	Specification for Vacuum-Treated Carbon and Alloy Forgings for Turbine Rotors and Shafts.

ASTM A 536	Specification for Ductile Iron Castings.
ASTM E 448	Recommended Practice for Scleroscope Hardness Testing of Metallic Materials.
ASTM B 62	Specification for Composition Bronze or Ounce Metal Castings.
Latest Edition	Hydraulic Institute Standards for Centrifugal, Rotary, and Reciprocating Pumps.

1.3 SUBMITTALS

A. Submittals shall be made in accordance with the General Requirements.

B. The following submittals and specific information shall be provided:

i. Pump name, identification number and specification number.

ii. Performance curve and pump data.

iii. The contractor shall require the manufacturer to indicate points on the H/Q curves, and the limits recommended for stable operation between which the pumps may be operated without surge, cavitation and vibration. The stable operating range shall be as wide as possible based on the pumps actual hydraulic and mechanical tests.

iv. Pump detailed description and specification.

v. Electrical data including control and wiring diagrams.

vi. Assembly and installation drawings including shaft size, seal, coupling, anchor bolt plan, part nomenclature, material list, outline dimensions and shipping weights.

vii. Bearing life calculations.

C. Certification

i. The contractor shall obtain written certification from the pump manufacturer, addressed to the city, stating that the equipment will efficiently and thoroughly perform the required functions in accordance with these Specifications and as shown, and that the pump manufacturer accepts joint responsibility with the contractor for coordination of all equipment, including motors, variable speed drives, controls, and services required for proper installation and operation of

the completely assembled and installed pumps. The contractor shall submit all such certificates to the engineer.

D. Technical Manuals

i. Prior to startup the contractor shall furnish the City's complete operations and maintenance manuals in accordance with Technical Manuals of the General Requirements.

E. Tools

i. Special tools necessary for maintenance and repair of the pumps and one pressure grease gun for each type of grease required for pumps and motors shall be furnished as a part of the work hereunder; such tools shall be suitably stored in metal tool boxes, and identified with the equipment number by means of stainless steel or solid plastic name tags attached to the box.

F. Spare Parts

i. The contractor shall obtain and submit from the manufacturer a list of recommended spare parts for each piece of equipment according to the provisions of spare parts of the General Requirements. After approval, contractor shall furnish such spare parts suitably packaged, identified with the equipment number, and labeled. Contractor shall also furnish the name, address, and telephone number of the nearest distributor for each piece of equipment. All spare parts are intended for use by the City, only, after expiration of the guaranty period. Any spare parts which the engineer permits the contractor to use for startup activities shall be replaced by the contractor prior to the City's acceptance of beneficial use of the equipment.

a. During the term of this Contract the contractor shall notify the engineer in writing about any manufacturer's modification of the approved spare parts, such as part number, interchangeability, model change or others. If the engineer determines that the modified parts are no longer applicable to the supplied equipment, the contractor at its expense shall provide applicable spare parts.

G. Field Procedures

i. Instructions for field procedures for erection, adjustments, inspection, and testing shall be provided prior to installation of the pumps.

1.4 QUALITY ASSURANCE

A. Performance Curves

i. All centrifugal pumps shall have a continuously rising curve. In no case shall the required horsepower at any point on the performance curve exceed the rated horsepower of the motor or engine.

B. Equipment Testing

i. General: Tests shall be performed in accordance with the Test Code for Centrifugal Pumps of the Standards of the Hydraulic Institute, Inc. Tests shall be performed on the actual assembled unit from shut-off head condition to 125 percent of the required maximum design capacity. Prototype model tests will not be acceptable. Pumps and motors shall be factory-tested, as defined herein.

ii. Factory Tests of Pumps: All pumps and motors of sizes 10 to 125 hp (inclusive) shall be factory-tested in accordance with the above specifications. Seven sets of Certified test data shall be submitted to the engineer. This data shall include, but not be limited to the following:

a. Hydrostatic test with data recorded.

b. Hydraulic test with a minimum of 5 readings between shutoff head and 125 percent of the maximum design capacity, recorded on data sheets as defined by the Hydraulic Institute, signed, dated, and certified.

c. Certified pump curves showing head/flow, bhp, efficiency, [NPSH] curves. [NPSH required shall be at least 5 feet of water absolute less than NPSH available.]

d. Certification that the pump hp demand will not exceed the rated motor hp beyond the 1.0 service rating at any point on the curve.

iii. Factory Tests of Motors: All motors of sizes 10 hp and larger, shall be assembled, tested, and certified at the factory and the working clearances checked to insure that all parts are properly fitted. The tests shall be in accordance with ANSI/IEEE 112 and ANSI/IEEE 115 standards, including heat run and efficiency tests. All computations shall be recorded and 7 certified and dated copies of the test results shall be furnished to the engineer.

iv. Factory Witnessed Tests: All pumps, variable speed drives, and motors, 150 hp and larger, shall be factory-tested as complete, assembled units, as

specified above, and witnessed by the engineer and the inspector. The manufacturer shall give the Engineer a minimum of 2 weeks notification prior to the test. All costs for inspector and engineer shall be borne by the contractor and included in the bid price. Such costs shall include travel and subsistence for 2 people but shall exclude any salaries. Test results in triplicate shall be submitted to the engineer and no equipment shall be shipped until the test data have been approved by the engineer and the inspector.

v. Acceptance: In the event of failure of any pump to meet any of the above requirements or efficiencies, the contractor shall make all necessary modifications, repairs, or replacements to conform to the requirements of the Contract Documents and the pump shall be re-tested at no additional compensation, until found satisfactory.

C. Field Tests

i. All pumping units shall be field tested after installation, in accordance with the Contract Documents, to demonstrate satisfactory operation, without causing excessive noise, vibration, cavitation, and overheating of the bearings. The field testing shall be performed in the presence of an experienced field representative of the manufacturer of each major item of equipment, who shall supervise the following tasks and shall certify in writing that the equipment and controls have been properly installed, aligned, lubricated, adjusted, and readied for operation:

a. Start-up, check, and operate the equipment over the entire speed range. The vibration shall be within the amplitude limits recommended in the Hydraulic Institute Standards and it shall be recorded at a minimum of 4 pumping conditions defined by the engineer.

b. Pump performance shall be documented by obtaining concurrent readings, showing motor voltage, amperage, pump suction head, and pump discharge head, for at least 4 pumping conditions at each pump rpm. Each power lead to the motor shall be checked for proper current balance.

c. Bearing temperatures shall be determined by a contact-type thermometer. A running time of at least 20 minutes shall be maintained for this test, unless liquid volume available is insufficient for a complete test.

d. Electrical and instrumentation testing shall conform to applicable sections of these Specifications.

e. The field testing shall be witnessed by the engineer and the inspector. In the event any of the pumping equipment fails to meet the above test requirements, it shall be modified and retested in accordance with the requirements of these Specifications. The contractor shall then certify in writing that the equipment has been satisfactorily tested, and that all final adjustments thereto have been made. Certification shall include date of final acceptance test, as well as a listing of all persons present during tests, and resulting test data. The costs of all work performed in this Paragraph by factory-trained representatives shall be borne by the contractor. The City will pay for costs of power and water. When available, the City's operating personnel will provide assistance in the field testing.

1.5 MANUFACTURER'S SERVICE REPRESENTATIVE

A. Erection and Startup Assistance

i. Service and instruction assistance by the manufacturer's engineering representative for each pump 10 hp and larger shall be provided by the contractor during the following periods:

a. During erection

b. During startup

B. Instruction of Owner's Personnel

i. The contractor shall provide for the services of a factory service representative to instruct the Owner's personnel in the operation and maintenance of the equipment. This service shall consist of a day's visit to the plant for each type of similar pumps.

1.6 GUARANTEES

A. After completion, the contractor shall furnish to the city the manufacturer's written guarantees, that the pumping equipment will operate with the published efficiencies, heads, and flow ranges and meet these specifications. The contractor shall also furnish the manufacturer's warranties as published in its literature and as specified.

PART 2 – PRODUCTS

2.1 GENERAL

A. The contractor shall furnish and install only such pumping equipment as the designated single manufacturer certifies is suitable for use with its equipment and the service conditions.

B. All manufactured items provided under this Section shall be new, of current manufacture, and shall be the products of reputable manufacturers specializing in the manufacture of such products; such manufacturers shall have had previous experience in such manufacture and shall, upon request of the engineer, furnish the names of not less than 5 successful installations of its equipment of comparable nature to that offered under this contract.

C. All combinations of manufactured equipment which are provided under these specifications shall be entirely compatible, and the contractor and the designated single manufacturer shall be responsible for the compatible and successful operation of the various components of the units conforming to specified requirements. Each unit of pumping equipment shall incorporate all basic mechanisms, coupling, electric motor or engine drive and unit mounting. All necessary mountings and appurtenances shall be included.

2.2 MATERIALS

A. All materials furnished as part of the pumping equipment shall be suitable for its intended use and service. Materials not specifically called for shall be high-grade, standard commercial quality, free from all defects and imperfection that might affect the serviceability of the product for the purpose for which it is intended, and shall conform to the following requirements:

i. Cast iron pump casings and bowls shall be of close-grained gray cast iron, conforming to ASTM A 48, or equal.

ii. Bronze pump impellers shall conform to ASTM B 62.

iii. Stainless steel pump shafts shall be of Type 400, Series. Miscellaneous stainless steel parts shall be of Type 316 except in septic environment.

iv. All anchor bolts, nuts and washers shall be hot-dip galvanized, unless otherwise specified in individual pumping equipment specifications. Buried or submerged bolts, nuts and washers shall be of stainless steel.

2.3 PUMP APPURTENANCES

1. Nameplates

i. Each pump shall be equipped with a stainless steel nameplate indicating rated head and flow, impeller size, pump speed, and manufacturer's name and model number.

2. Solenoid Valves

   i. If required, the pump manufacturer shall furnish and install solenoid valves on the water or oil lubrication lines and on all cooling water lines. Solenoid valve electrical rating shall be compatible with the motor control voltage and shall be furnished complete with all necessary conduit and wiring installation from control panel to solenoid.

3. Pressure Gages

   i. All pumps (except sample pumps, sump pumps, and hot water circulating pumps) shall be equipped with pressure gages installed at pump suction and discharge lines. Pressure gages shall be located in a representative location, where not subject to shock or vibrations, in order to achieve true and accurate readings. Pressure gages shall be furnished in conformance with Section 15050, "Gauges".

   ii. Pump suctions shall be equipped with compound gages where indicated. Where subject to shock or vibrations, the pressure gages shall be provided with snubber and wall-mounted or attached to galvanized channel floor stands and connected by means of flexible connectors.

4. Variable Speed Drives

   i. Variable speed drives, drive motors, speed control equipment, and accessories shall be furnished in accordance with applicable Division 11 sections.

2.4 PUMP REQUIREMENTS – GENERAL

A. Flanges

   i. Suction and discharge flanges shall conform to ANSI standard B16.1 or B16.5 dimensions.

B. Lubrication

   i. Vertical pump shafts shall be product water-lubricated, unless otherwise specified. Deep-well pumps and pumps with dry barrels shall have water- or oil-lubricated bearings and seals.

C. Handholes

   i. Handholes on pump casings shall be shaped to follow the contours of the casing to avoid any obstructions in the water passage.

D. Drains

i. All gland seals, air valves, and cooling water drains, and drains from variable speed drive equipment shall be piped to the nearest floor sink, or drain, with galvanized steel pipe or copper tube, properly supported with brackets.

E. Stuffing Boxes

i. Where stuffing boxes are specified for the pump seal, they shall be of the best quality, using the manufacturer's suggested materials best suited for the specific application. For sewage, sludge, drainage, and liquids containing sediments, the seals shall be fresh-water flushed, using lantern rings. If fresh water is not available, the seal shall be flushed with product water cleaned by means of a solids separator as furnished by John Crane Co., Lakos (Claude Laval Corp.), or equal. Unless otherwise specified, the packing material shall be interlaced Teflon braiding, containing 50 percent ultrafine graphite impregnation to satisfy the following specification:

Shaft speeds	-	up to 2500 fpm
Temperature	-	up to 500 degrees F
pH range	-	0-14

F. Mechanical Seals

i. Unless otherwise specified mechanical seal designs shall be selected for highest reliability and for rugged service. Mechanical seals shall be provided where called out, and they shall be water-flushed, unless otherwise specified. Water flushing shall be as described above. Unless the pump manufacturer recommends a better seal for a specific application, the following mechanical seals shall be furnished with the pumps:

Sewage, Sludge, or Wastewater Pumps	-	Double seals: John Crane Type I Double; Borg-Warner Type L Double; or equal.

Abrasives, Grit, Lime Slurry Pumps	-	Double seals: John Crane Type I (hard faces); Borg-Warner Type L (hard faces); or equal.
Chemicals, and Corrosive Liquid Pumps	-	Single seals: John Crane Type 8-1, 9; Borg-Warner Type Q, QB; or equal.
Clean Water Pumps, Hot and Cold	-	Single seals: John Crane, Type I, 21; Borg-Warner Type L; or equal.

G. For all seal arrangements, a buffer fluid must be circulated a minimum 20 psi above suction pressure, or as required by manufacturer, in order to maintain reliable seal performance.

H. Preferred seals for all services other than chemicals and corrosives should be equipped with nonclogging, single coil springs and nonsliding, internal, secondary elastomers. Metal parts are to be of 300 series, corrosion-resistant materials.

PART 3 – EXECUTION

3.1 INSTALLATION

A. General

i. Pumping equipment shall be installed in accordance with approved procedures submitted with the shop drawings and as shown, unless otherwise approved by the engineer.

B. Alignment

i. Equipment shall be field tested to verify proper alignment, operation as specified, and freedom from binding, scraping, vibration, shaft runout, or other defects. Pump drive shafts shall be measured just prior to assembly to ensure correct alignment. Equipment shall be secured in position and fixed neatly in appearance.

C. Lubricants

i. The installation work shall include furnishing the necessary oil and grease for initial operation.

3.2 PROTECTIVE COATING

A. All exposed materials, except corrosion-resistant metals which have not been shop painted, shall be field coated as specified in the pumps respective section. Shop painted items which suffered damage to the shop coating shall be touched up per manufacturers recommendation.

END SECTION

SECTION 11211 – OXYGEN PROBES

PART 1 – GENERAL

1.1 SUMMARY

A. Requirements: This section specifies the sensors, cables, controllers and associated equipment for measuring dissolved oxygen in the aerobic digester at a wastewater treatment facility in accordance with the requirements of the Contract Documents.

B. Furnish, install, calibrate, test, adjust, and place into satisfactory operation dissolved oxygen measurement systems as shown on the Drawings and specified herein

1.2 SUBMITTALS

A. Submit complete dimensioned shop drawings including wiring diagram for oxygen probes and controls, including mounting brackets/sensor holder installation instructions.

B. Submit manufacturer's certification of accuracy for meter, stating that meter was factory calibrated to the required limits of accuracy.

C. Submit complete operation and maintenance manual.

1.3 COORDINATION

A. Coordinate with aerobic digester blower and MBR supplier for installation of all items specified herein and required to ensure the complete and proper interfacing of all the components and systems.

PART 2 – PRODUCTS

2.1 MANUFACTURER

A. Oxygen Probe: YSI Incorporated, Model FDO 700/701 IQ or approved equal

B. Controller: YSI Incorporated, Model DIQ/S 282-CR3 or approved equal

2.2 OXYGEN PROBES

A. The Dissolved Oxygen Measurement system consists of the following
   i. The sensor shall have integrated NTC thermistor.
   ii. The sensor shall use green LED light with fluorescing optics and equal path reference system.
   iii. The sensor shall not require calibration. Replacement sensor caps shall contain a built in microchip, not requiring field calibration upon installation.

iv. The sensor shall include self-diagnostics for monitoring of membrane sensing element function.
v. The sensor output signal shall be digital.
vi. The sensor shall detach from sensor cable allowing for easy replacement or repair.
vii. The sensor shall be designed to be nonincendive and nonarcing.

B. Materials

i. Sensor:
Shaft: V4A Stainless Steel 1.4571 (equivalent to 316Ti)
Plug head connector housing: POM
Sensor head: POM and PVC
Plug: ETFE
Fixing Ring: POM
Protection rating: IP68

ii. Sensor Cap
Sensor cap: PMMA, PVC , silicone
Warranty: 2 yrs.

iii. Sensor Connection Cables
Length: 7m
Conductors: Tin-coated stranded copper wire
Coupling ring: Stainless Steel 1.4571 (equivalent to 316Ti)
Ring: POM
Screw: Stainless Steel V4A
O-ring: NBR
Enclosure: POM
Nut: Stainless Steel 1.4571 (equivalent to 316Ti)
Protection ring: POM
Cable sheath: PUR
Protective cap: PVC
Protection rating: IP68 (waterproof)
Warranty: 12 months

2.3 PROCESS MONITORING CONTROLLER

A. The multi-parameter controller shall consists of the following:

i. Inputs
1 SensorNet connection
1 x 100 to 240 VAC power

ii. Outputs
3 current outputs
3 relay outputs

iii. Display
Color, backlit.
Resolution: 320 (W) x 240 (H) pixels
Viewable area: 2.76 in. (W) x 2.07 in. (H)
Up to 10 measured values depending on the connected sensors.
Instantaneous and continuous display of up to 10 measured values depending on the connected sensors.
Graphical display with extended sensor functions of select sensors.

iv. Function/operation
3 function keys
2 confirmation/switching keys
2-directional navigation key

v. Datalogger
Total storage: Up to 520,000 measurements in csv format.
User programmable logging interval: 1 minute to 60 minutes.
For each measurement logged, display of logged measurements at selected logging interval in a list or graphical daily, weekly or monthly xy chart.

vi. Multi-function USB-A port
Electronic key
Firmware upgrade
Data transfer

vii. Cable glands: M 16 x 1.5, 4 total, with blind plug

viii. Power output: 6.5W

ix. Controller shall use a menu-driven operating system.

x. Each universal controller shall control 1 to 2 sensors.

B. Materials for Terminal/Controller

i. Housing material: polycarbonate, 20% glass filled

ii. Function keys: silicon

2.4 ACCESSORIES

A. Quick Release Stainless Steel Handrail Mounting Bracket with 1.5-inch Mounting Adapter

B. Sensor cap shall be protected against scratching or other damage with a protective device that attaches to the probe body using a coupling ring.

C. Sun shield

PART 3 – EXECUTION

3.1 INSTALLATION

A. Install dissolved oxygen sensors in strict accordance with the manufacturer's instructions and recommendations.

B. Immersion sensors:

i. Immerse sensor a minimum of 18in. (46 cm) below the surface.

ii. Protect the probe against the oncoming flow of large objects.

iii. Install where the optical window does not face into direct light.

iv. Install instrument to prevent air bubbles from gathering on the membrane sensing element.

C. Sensor connection cable bend radius

i. Permanent bend: not less than 3.2 in. (80 mm).

ii. One-time bend: not less than 2 in. (50 mm).

3.2 ADJUSTING

Adjust settings of the dissolved oxygen measuring system for the application requirements in accordance with the manufacturer's instructions

3.3 DEMONSTRATION AND TRAINING

A. Demonstrate performance of all instruments to the Owner before commissioning.

B. Manufacturer's representative will include a two (2) hours of training, if requested.

END SECTION

SECTION 11212 – TURBIDITY METER

PART 1 – GENERAL

1.1 SUMMARY

The Contractor shall furnish and install all turbidity meters and appurtenant work, complete and operable, on the disk filters where shown in accordance with the requirements of the Contract Documents.

1.2 SUBMITTALS

Submittals shall be made in accordance with Section 01300 Submittals.

A. Submit complete dimensioned shop drawings including wiring diagram for turbidity meters and controls.

B. Submit manufacturer's certification of accuracy for turbidity meters, stating that turbidity meter was factory calibrated to the required limits of accuracy.

C. Submit complete operation and maintenance manual.

D. Manufacturer's warranty Section 11000 General Equipment Requirements

PART 2 – PRODUCTS

2.1 TURBIDITY METERS

A. Turbidity meters shall be HACH Company, model 1720E Low Range Turbidimeter, or approved equal.

B. The turbidimeter shall be a microprocessor-based, continuous reading, on-line nephelometric instrument.

C. The turbidity monitoring system shall include one (1) turbidity meter and one (1) controller interface unit for the disk filters.

D. The turbidimeter shall measure turbidity in the range of 0.001-100 NTU.

E. Accuracy shall be ±2% of reading or ±0.015 NTU (whichever is greater) from 0 to 40 NTU; ±5% of reading from 40 to 100 NTU.

F. Displayed resolution shall be 0.0001 NTU from 0 to 9.999 NTU and 0.001 NTU from 10.000 to 9.999 NTU.

G. Repeatability shall be better than ±1.0% of reading or ±0.002 NTU (whichever is greater).

H. The turbidimeter shall meet all design and performance criteria specified by USEPA method 180.1.

I. Light shall be directed through the surface of the sample and the detector shall be immersed in the sample, eliminating glass windows and flow cells.

J. Optical components shall be mounted in a sealed head assembly that can be removed for calibration/service without disturbing sample flow.

K. The turbidimeter body shall be constructed of corrosion-resistant polystyrene.

L. An internal bubble removal system shall be included to vent entrained air from the sample stream.

M. Calibration of the turbidimeter shall be either formazin-based (20 or 1 NTU) or instrument comparison-based calibration method.

N. User selectable signal averaging, bubble removal, alarm and recorder output hold, and self-test diagnostics shall be provided.

2.2 CONTROLLER

A. Controller shall be HACH sc200 Universal Controller, or approved equal.

B. Connections between the turbidimeters and the controller shall be “plug and play.”

C. The display shall be a graphic dot matrix LCD with LED backlighting. The display contrast shall be adjustable.

D. The controller enclosure shall be 1/2 DIN format, NEMA4X rated for wall, pole and panel mounting, and shall include a sun shield.

E. The controller power supply shall be 100-240 VAC 50/60 Hz.

F. The controller shall provide two analog 0/4-20 mA output signals with independent PID control functions.

G. The controller shall be dual channel.

H. The controller shall have 2 Data logs, 128 kb each. The logged data shall be downloadable on a SD card in XML format.

I. The controller shall be warranted for 12 months against defects in material and workmanship.

2.3 ACCESSORIES

A. Floor stand supplied with each turbidity meter.

B. Sun Shield with each controller.

PART 3 – EXECUTION

3.1 INSTALLATION

Turbidity meters and controller shall be installed in strict accordance with the manufacturer's printed instructions

END SECTION

SECTION 11213 – LEVEL ELEMENTS

PART 1 – GENERAL

1.1 SUMMARY

Furnish all labor, materials, equipment and incidentals to install six (6) level sensors and six (6) level switches, in place complete, for the North Pump Station, South Pump Station, Flow Equalization Tank, Aerobic Digester, Plant Drain Pump Station, R-1 Water Reservoir. All level elements shall be installed as shown on the drawings.

1.2 SUBMITTALS

Submittals shall be made in accordance with Section 01300 SUBMITTALS.

A. Shop drawings detailing the equipment description, specifications, and dimensional drawings.

B. Wiring Diagrams.

1.3 SERVICE CONDITIONS

The level elements shall be suitable for continuous duty at a municipal wastewater facility.

PART 2 – PRODUCTS

2.1 ACCEPTABLE PRODUCTS

A. Level Sensors

Level sensors shall be MJK Pressure Transmitter 3400, Range 0-30 ft or approved equal.

B. Level Switches

Level switches shall be Flygt ENM-10, MJK Float Switch 7030, or approved equal.

2.2 LEVEL ELEMENTS

A. DHHL North Pump Station

One (1) level sensor and one (1) level switch shall be provided at the pump station

B. DHHL South Pump Station

One (1) level sensor and one (1) level switch shall be provided at the pump station

C. Equalization Tank and Pumps

One (1) level sensor and three (2) level switches shall be provided at the equalization tank

D. Aerobic Digester

One (1) level switch shall be provided at the pump station

E. WWTP Pump Station

One (1) level sensor and one (1) level switch shall be provided at the WWTP pump station

F. R-1 Reservoir

One (1) level sensor shall be provided at the R-1 Water Reservoir. and one transmitter connection box

2.3 FABRICATION

A. Level Sensor

The liquid level shall be measured by a level sensor, which transmits a signal to a control system. The transmitter shall be a 4-20 mA, two-wire, 10/30 VDC type with its output directly proportional to the measured liquid level. Measuring accuracy shall be equal to or better than ± 0.1 percent of total range. Level sensor shall be suitable for a media temperature range of -20 degrees Celsius to 80 degrees Celsius.

The sensor shall be suitable for continuous submerged operation and shall be installed in accordance with the manufacturer's directions. The sensor housing shall be PPS (Ryton) with a ceramic sensor. The sensor shall contain a Viton O-ring and a polyurethane vented cable.

Sensor shall be provided with a minimum cable length of 40 feet.

B. Level Switch

The liquid level switch shall consist of a cable-suspended, polypropylene encased, displacement switch. Switch cable shall be of PVC. Sensor shall be provided with a minimum cable length of 20 feet.

PART 3 – EXECUTION

3.1 INSTALLATION

The level elements shall be installed in accordance with approved procedures submitted with the shop drawings and as indicated on the drawings, unless otherwise approved.

3.2 TESTING

The Contractor shall inspect level elements operation after installation and correct any functional deficiencies. The Contractor shall provide materials necessary to complete the field verification. Completed inspection reports shall be submitted to the County Engineer. All additional time required to achieve successful installation and operation shall be at the expense of the Contractor.

END SECTION

SECTION 11217 – ROTARY LOBE PUMPS

PART 1 – GENERAL

1.1 SUMMARY

A. The work of this Section includes providing two variable speed rotary lobe pumps with horizontal electric motor mounted in a “piggy back” orientation and appurtenances mounted on a base-plate. Coordination of the rotary lobe pumps shall be under the responsibility of the Sludge Dewatering Screw Press manufacturer.

1.2 RELATED WORK

A. Section 11334 Dewatering Screw Press

B. Section 16483 Variable Frequency Drives

PART 2 – PRODUCTS

2.1 PUMP NAME: P-1102A and P-1102B

A. General

i. The Contractor shall furnish 2 rotary lobe positive displacement, self-priming, tri-lobe pump as indicated in this Section, to conform to the following requirements:

Number of Pumping Units	- 2
Location	- Solid Dewatering Area
Service	- Screw Press Feed Pump
Operation (hours per day)	- 8
Drive	- Variable Speed

ii. Operating Conditions:

Capacity (gpm)	- 7 - 25
Pump Head (ft)	- 10
Liquid to be pumped	- Aerobic Digested Sludge
Specific Gravity of Liquid	- 1.012
Liquid temperature (degrees F)	- ± 75

Motor Size (hp)	- 2.0
Solids Concentration (percent)	- 2.5 to 4%

iii. Pump Dimensions:

Suction Flange, min size (in)	- 2”
Discharge Flange, min size (in)	- 2”
Flange rating (psi)	- 150

2.2 PUMP REQUIREMENTS

A. Construction

i. Rotary lobe pumps shall comply with the following requirements:

Casing and End Cover Hardness:	Cast Iron ASTM A48
Shafts:	Carbon Steel, ASTM A470
Shaft Sleeve:	Stellite-coated stainless steel
Rotor Material:	Buna-N
Number of Rotors:	- 2
Number of Lobes per Rotor:	- 3
Bearings:	Two sets of high-quality ball Bearings, the inboard set being single-ball race and the outboard set being dual-ball race, all with L-10 life of 40,000 hours.
Lubrication:	External grease fittings

B. Pump Control

i. The control of the sludge pumps shall be integrated within the Sludge Screw Press Control panel. The Control Panel shall provide the following for the each pump:

a. Circuit breaker type power disconnect with "power on" status light.

b. A relay control logic to shut down each pump due to jams or overpressure.

c. One red status light for fault indication.

d. Logic circuits for remote indication. The Control Panel shall be provided with contacts to relay the following control signals to the MBR PLC indicated below:

i. Pump Fault

ii. Pump Speed

iii. Pump Run

2.3 NAMEPLATES, TOOLS, AND SPARE PARTS

A. Spare Parts

i. The work includes the following spare parts for each pump:

a. 1 set of all gaskets and O-rings

b. 1 set of all pump and motor bearings

c. 1 set of all packings and lantern rings

d. 1 set of all shaft sleeves

e. 1 set of rotors

ii. Spare parts shall be stored in tool boxes and identified with the equipment number by means of stainless steel or solid plastic name tags attached to the boxes.

2.4 MANUFACTURERS

A. Pumps of the type indicated shall be manufactured by:

i. Borger Rotary Lobe Pumps

ii. Or approved equal

PART 3 – EXECUTION

3.1 INSTALLATION

A. General

i. Pumping equipment shall be installed in accordance with the manufacturer's written instructions.

ii. General installation requirements shall be as indicated in Section 11000.

3.2 FIELD TESTING

A. Field testing of the pumps shall be performed in compliance with Section 11000.

END SECTION

SECTION 11221 – SUBMERSIBLE NON-CLOG PUMPS

PART 1 – GENERAL

1.1 SUMMARY

A. General Requirements: The contractor shall furnish all tools, equipment, materials, and supplies and shall perform all labor required to complete the work as indicated on the Drawings and specified herein.

B. This Section covers guide rail-mounted submersible, non-clog centrifugal pumping units and controls. Each pumping unit shall be complete with a closed-coupled, submersible, electric motor; a floor-mounted discharge base and elbow; guide rails**;** pedestal support with suction elbow; access hatch cover; and all other appurtenances specified or otherwise required for proper operation.

1.2 RELATED WORK

A. Section 11210 Pumps (General)

B. Section 11000 General Equipment Requirements

1.3 SUBMITTALS

A. Submittals shall be made in accordance with the General Requirements.

B. The submittal shall include complete fabrication, assembly, foundation, and installation drawings, together with detailed specifications, and data covering materials used, parts, devices, and other accessories forming a part of the equipment furnished, including the following information:

i. Pumps

a. Name of Manufacturer

b. Type and Model

c. Rotative Speed

d. Size of Suction

e. Size of Discharge

f. Type of Bearings

g. Net Weight of Pump Motor

h. Complete performance curve showing capacity vs. head, NPSH required, efficiency, and kW input

i. Data on Shop Painting

ii. Motors

a. Name of Manufacturer

b. Type and Model

c. Type of Bearings and Lubrication

d. Rated size of Motor, hp

e. Temperature Rating

f. Full Load Rotative Speed

g. Net Weight

h. Service Factor

i. Efficiency at Full Load and Pump Design Point

j. Full Load Current

k. Locked Rotor Current

iii. Control Panels and Components

a. Name of Manufacturer

b. Type and Model

c. Dimensions and Net Weight of Complete Panel

d. Overcurrent characteristics and details of motor control

1.4 QUALITY ASSURANCES

A. General

i. Unless otherwise specified herein, quality assurance of all submersible pumps and motors shall be as specified in Section 11210 “Pumps (General).”

B. Factory Tests

i. Each pump shall be factory tested for performance and hydrostatic pressure as specified in the Hydraulic Institute Test Code. Test results shall be signed and certified by an officer or the manufacturing Corporation.

C. Complete Units

i. The pump manufacturer shall provide complete assemblies, including motor, close-coupled volute, cast iron discharge elbow base, stainless steel guide rails, power cable and accessories, complete and ready for use. The pump manufacturer shall test and be responsible for the pump and shall submit a certificate of conformance to these specifications. The pump manufacturer shall certify that the pump is free from vibration. The pump, mechanical seals and motor units provided under this specification shall be from the same manufacturer in order to achieve standardization of operation, maintenance, spare parts, manufacturer’s service and warranty.

1.5 SPARE PARTS

A. The pumps shall be furnished with the following spare parts:

i. One (1) set of mechanical shaft seals for each pump.

ii. One (1) set of wearing rings for each pump.

iii. One (1) set of bearings for each pump and motor.

iv. Three (3) sets of O-rings for each pump.

v. One (1) neoprene submersible cable of required length for the submersible pumps complete with termination kit.

B. All spare parts shall be packed in containers which are clearly identified with indelible markings on the containers.

PART 2 – PRODUCTS

2.1 GENERAL REQUIREMENTS

A. Power Supply

i. Power supply to equipment will be 480 volts, 60-Hz, 3-phase.

B. Anchor Bolts

i. All anchor bolts, nuts, and washers shall be 316 stainless steel and shall comply with the anchor bolts and expansion anchors section. Anchor bolts shall be accurately located and centered in pipe sleeves having an inside diameter approximately 2-1/2 times the bolt diameter and with a length approximately 8 times the bolt diameter.

C. Painting

i. All iron and steel parts which will be in contact with pumped liquid or submerged after installation, including the inside of the impeller casing, the impeller, and the discharge elbow, shall be shop cleaned in accordance with the coating manufacturer's recommendations and painted with an epoxy coating system. The coating shall have a dry film thickness of at least 10 mils and shall consist of a prime (first) coat and one or more finish coats. At least one quart of the finish coat shall be furnished with each pump for field touchup painting.

ii. All other iron and steel surfaces, except stainless steel and machined surfaces, shall be shop painted as specified in Section 09900 "Painting."

D. Manufacturers

i. Flygt Corporation

ii. Or approved equal

2.2 PERFORMANCE AND DESIGN REQUIREMENTS

A. Pumping units shall be designed for the following operating conditions and requirements:

Operating Condition	Pump
Location	**- DHHL North Pump Station**
Unit Designation	- NPS-0110A / NPS-0110B
Manufacturer	- Flygt
Model	- NP 3315 HT3-455
Number of Pumping Units	- Two (2)
Service	- Raw Wastewater
Speed	- Variable
Design Conditions	- 1400 GPM @ 255 feet

Pump Efficiency at design condition %	- 65%
Horsepower	- 160 Hp
Pump Discharge, in	- 6

Location	**- DHHL South Pump Station**
Unit Designation	- SPS-0110A / SPS-0110B
Manuf	- Flygt
Model	- NP 3202 SH3-273
Number of Pumping Units	- Two (2)
Service	- Raw Wastewater
Speed	- Variable
Design Conditions	- 197 GPM @ 320 feet
Pump Efficiency at design condition %	- 30%
Horsepower	- 72 Hp
Pump Discharge, in	- 6

Location	**- WWTP Pump Station**
Unit Designation	- P-1200A / P-1200B
Manuf	- Flygt
Model	- NP 3102 MT3
Number of Pumping Units	- Two (2)
Service	- Raw Wastewater
Speed	- Variable
Design Conditions	- 333 GPM @ 28.8 feet
Overall Efficiency at design condition %	- 60.0%
Horsepower	- 5.5 Hp
Pump Discharge, in	- 4

Location	- WWTP Equalization Tank
Unit Designation	- P-2000A / P-2000B
Manuf	- Flygt
Model	- NP 3127 SH3
Number of Pumping Units	- Two (2)
Service	- Screened Wastewater
Speed	- Variable
Design Conditions	- 159 GPM @ 31.4 feet
Pump Efficiency at design condition %	- 60%
Horsepower	- 7.5 Hp
Pump Discharge, in	- 3

B. Pump performance shall be stable and free from cavitation and noise throughout the specified operating head range at minimum suction submergences. The design running clearance between the impeller inlet and the casing wearing ring (if provided) shall be not less than 0.006-inch or one-half mil per inch of casing wearing ring diameter, whichever is greater.

C. Each pumping unit shall be designed so that reverse rotation at rated head will not cause damage to any component.

2.3 MATERIALS

A. Stator Housing, Oil Chamber Housing, Impeller Casing, Impeller, and Sliding Bracket: Cast Iron, ASTM A48

B. Casing Wearing Ring: Bronze ASTM B62, or rubber

C. Bottom Wearing Plate: Cast Iron, ASTM A48

D. Shaft: Alloy steel, Hard Chrome Plated; or Stainless Steel

E. All Wetted Assembly Fasteners: Stainless Steel

F. Mechanical Seals: Two Tandem Single Type, Oil Lubricated with Tungsten Carbide Seal Rings at all points except the Upper Rotating Seal, which shall be Carbon.

G. Discharge Base: Cast Iron or Fabricated Steel

H. Guide Rails: Type 316 Stainless Steel

I. Epoxy Coating:

i. Primer: Amercoat 71, Tnemec P66 or equal, DFT = 1.5 mils.

ii. Finish Coat: Amercoat 78 HB, Tnemec 46 H-413, or equal DFT = 16 mils.

2.4 PUMP CONSTRUCTION

.

A. Impeller Casing

i. The impeller casing shall have well-rounded water passages and smooth internal surfaces free from cracks, porosity, blow holes, or other irregularities. The discharge nozzle shall be flanged and sufficiently rigid to support the guide rail-mounted pumping unit under all operating conditions.

B. Impeller

i. The impeller shall be a semi-open or enclosed one-piece casting with not more than two nonclog passages. The interior water passages shall have uniform sections, smooth surfaces, and free from cracks and porosity. The impeller shall be dynamically balanced and securely locked to the shaft by means of key and self-locking bolt or nut.

ii. Balance vanes shall be provided on the impeller back shroud. Running clearances between the vanes and adjacent housing surfaces shall be such as to reduce pump discharge pressure at the lower mechanical seal sufficiently to permit the oil in the oil chamber housing to effectively lubricate the lower seal.

C. Wearing Rings

i. Renewable wearing rings shall be securely fastened to the impeller casing front cover to provide either an axial or radial running clearance. As an alternative, the use of an axially adjustable wearing plate arranged to permit adjustment of the axial running clearance between the impeller and plate will also be acceptable. The wearing plate shall have an outward spiraling groove designed to force stringy solids outward and away from the impeller.

D. Oil Chamber Housing

i. The oil chamber shall contain a moisture sensor, inspection plug, drain plug, and vent plug.

E. Mechanical Seals

i. Each pump shall be provided with two mechanical rotating seals arranged in tandem and running in an oil chamber. The lower seal unit between the pump and oil chamber shall contain one stationary and one positively driven rotating tungsten carbide ring. The upper seal unit between the oil chamber and stator housing shall contain one stationary tungsten carbide ring and one positively driven rotating carbon ring. Each interface shall be held in contact by an independent spring system designed to withstand maximum suction submergences. The seals shall require neither maintenance nor adjustment and shall be easily inspected and replaceable.

ii. Shaft seals lacking positively driven rotating members or conventional double mechanical seals which utilize a common single or double spring, acting between the upper and lower units and requiring a pressure differential to offset the external pressure and effect sealing, will not be acceptable. The seals shall not rely upon the pumped media for lubrication and shall not be damaged if the pumps are run unsubmerged for extended periods of time.

F. Sealing of Mating Surfaces

i. All mating surfaces of major components shall be machined and fitted with O-rings where watertight sealing is required. Sealing shall be accomplished by O-ring contact of four surfaces and O-ring compression in two plans without reliance on a specific fastener torque or tension to obtain a watertight joint. The use of elliptical O-rings, gaskets, or seals requiring a specific fastener torque value to obtain and maintain gasket or seal compression and watertightness will not be acceptable. The use of secondary sealing compounds, gasket cement, grease, or other devices to obtain watertight joints will not be acceptable.

G. Discharge Base

i. A discharge base and discharge elbow shall be furnished by the pump manufacturer for each pumping unit. The base shall be sufficiently rigid to firmly support the guide rails, discharge piping, and pumping unit under all operating conditions. The base shall be provided with one or more integral support legs or pads suitable for bolting to the floor of the wet well. The face of the discharge elbow inlet flange shall be perpendicular to the floor and make contact with the face of the pump discharge nozzle flange. The diameter and drilling of the elbow outlet flange shall conform to ANSI B16.1, Class 125.

ii. The pump and motor assembly shall be automatically connected to and supported by the discharge base and guide rails such that the unit can be removed from the wet well and replaced without the need for operating personnel to enter the wet well.

H. Sliding Bracket

i. Each pumping unit shall be provided with an integral, self-aligning guide rail sliding bracket. The bracket shall be designed to obtain a wedging action between flange faces as final alignment of the pump occurs in the connected position. The bracket shall maintain proper contact and a suitably sealed connection between flange faces under all operating conditions.

I. Guide Rails

i. Each pumping unit shall be equipped with one or more guide rails constructed of Type 316 stainless steel. Guide rails shall be sized to fit the discharge base and the sliding bracket and shall extend upward from the discharge bases to the access hatch cover at the top of the wet well. An upper guide rail bracket shall be provided and shall be hot-dip galvanized.

J. Lifting Chain

i. A chain suitable for removing and installing each pump should be selected and provided by the pump manufacturer. The chain shall be 316 stainless steel. A suitable chain hook shall be provided at the top of the wet well.

K. Access Hatch Cover

i. The access hatch cover shall be provided by the pump manufacturer. The cover shall be of all-steel construction and suitable for a live load of H-20 vehicular loading. The cover shall be a double leaf type constructed of structural shapes and reinforced diamond pattern checkered plate equipped with a fall prevention grid. Structural shapes and plates shall have a thickness of not less than 1/4-inch. Each leaf shall be provided with two hinges, torsion bars, or other devices to assist opening, an automatic hold-

open arm, retractable handle, and a padlock hasp. The frame shall be provided with strap anchors bolted or welded to the exterior.

ii. Each cover shall be provided with a lifting chain hook, a guide rail support bracket, and a support bracket for the level control cables.

2.5 BALANCE

A. All rotating parts shall be accurately machined and shall be in as nearly perfect rotational balance as practicable. Excessive vibration shall be sufficient cause for rejection of the equipment. The mass of the unit and its distribution shall be such that resonance at normal operating speeds is avoided. In any case, the vibration displacement (peak-to-peak) as measured at any point on the machine shall not exceed 4.0 mils.

B. At any operating speed, the ratio of rotative speed to the critical speed of a unit or components thereof shall be less than 0.8 or more than 1.3.

2.6 ELECTRIC MOTORS

A. Each pump shall be driven by a totally submersible, electric motor furnished by the pump manufacturer. Each motor shall be rated 460-volt, 60-Hz, 3-phase and shall have a nameplate rating which exceeds the maximum horsepower required by the pump. The stator housing shall be an air-filled, watertight casing. Motor insulation shall be moisture-resistant, Class F, with temperature rise (based on maximum ambient temperature of 40 degrees C) of 80 degrees C measured by the resistance method. Each motor shall be NEMA Design B with 1.15 service factor for continuous duty.

B. The motor bearings shall be antifriction, permanently lubricated type. The lower bearing shall be fixed to carry the pump thrust and the upper bearing free to move axially. The bearings shall have a calculated AFBMA L_{10} Life Rating of 40,000 hours when operating at maximum operating head.

C. Each motor shall be capable of continuous operation in air (unsubmerged) for at least 24 hours under pump full load conditions without exceeding the temperature rise limitations for the motor insulation system.

D. Each motor starting current at full voltage shall not exceed 650 percent of the motor full load circuit.

E. Each pump motor shall be provided with a special cable UL-approved and suitable for submersible pump applications; this shall be indicated by a code or legend permanently embossed on the cable. The cable shall be at least 70 feet in length. Power cable shall be minimum 4 conductor, #12 AWG, copper with 600-volt insulation in accordance with NEC requirements.

F. The cable entry water seal design shall be such that a specific fastener torque is not required to ensure a watertight and submersible seal. The use of epoxies, silicones,

or other secondary sealing systems will not be acceptable. The cable entry junction box and motor shall be separated by a stator lead sealing gland or terminal board. The junction box shall isolate the motor interior from moisture gaining access through the top of the stator housing or a separate moisture-sensing device shall be provided in the stator housing.

2.7 CONTROLS

A. General

The pump controller shall consist of all the components, hardware and software to provide a trouble-free pumping station. The system shall be designed and specifically produced for the surveillance of the pump station. The system shall provide for interface to other RTU's and SCADA systems for remote control and data collection. The RTU shall control the pumps as a stand alone unit in the event of a communications loss. The controller shall be a MJK Model 704 System Package 1 or approved equal.

B. Materials:

1. All instruments and sensors shall be supplied by one manufacturer to ensure consistent fit and system-wide functioning.

2. Provide:

   a. Level controller manufacturer's sensor with required cable length for direct connection to the level controller.

   b. Level controller manufacturer's recommended sensor mounting bracket.

   c. Level controller manufacturer's recommended sun/rain shield or panel mounting kit for the level controller as required for the installation.

   d. All necessary wires and hardware necessary for installation and operation.

C. Operation

Pump controller shall provide continuous monitoring of the wet well level via analog level signal (4-20mADC). The pump controller shall start and stop pump based upon wet well level and operator programmed setpoints. The controller shall also be provided with a mercoid float switch (high high water level alarm) in event of analog signal failure. The controller shall also have provision for redundant analog level sensor. The pump controller shall alternate pump cycles to ensure equal run times. The pump controller shall monitor pump protection features to provide alarms in event of impending pump failure. It shall also monitor pump performance data to provide operations personnel the ability to evaluate station performance.

D. FUNCTIONS:

1. Operator Interface:

The pump controller shall operate the pumps in accordance with operator programmed setpoints. The following information shall be observed on the front panel display:

a. Wet well level

b. Cross-section areas of the wet well

c. Start-stop pump levels

d. Alarm levels for low level, high level and overflow

e. Nominal capacities of the pumps

f. Current flow and accumulated flow

g. Pumped volume for two days

h. Number of starts for each pump

i. Run time for each pump

j. Amp draws for each pump

The pump controller shall provide for local display, acknowledgement and remote notification of alarm conditions. The controller shall log up to 1000 alarm events. Alarm capabilities shall include, as a minimum:

a. Wet Well High Level

b. Wet Well Low Level

c. Wet Well Overflow

d. Pump Overcurrent

e. Pump Undercurrent

f. Pump Fail to Start

g. Pump Over temperature

h. Pump Seal Fail

i. Pump Service Alarm (when pump run time exceeds preset service interval)

j. Intrusion Alarm

k. Personnel Alarm (adjustable time-delay alarm if not acknowledged by on-site personnel)

l. Communications Failure

m. Test Alarm (periodic test alarm for communications)

2. Overflow:

The controller shall monitor for station overflow. Overflow recognition shall be achieved either by a setpoint from the analog level, or by contact input at the desired overflow point. The controller shall register an overflow alarm when this level is exceeded, as well as record the date and time of overflow occurrence, date and time overflow condition abates, and accumulated overflow duration.

3. Sump Cleaning:

The controller shall provide a sump cleaning function. At preset intervals the pumps shall be allowed lower the wet well level to the bottom of the volute in order to remove built up solid debris in the sump. The controller shall also allow periodic timed pump cycles in low inflow stations to prevent the wet well from becoming septic.

E. Level Sensing Equipment

Water level in the wet well shall be measured by a submersible water level transducer. The transducer shall transmit a 4-20 mA DC signal to the pump controller. The pumps shall normally be automatically controlled by the controller and water level. A polyethylene mercoid float switch shall be provided for the high high water level. In the event the primary level sensor fails, this float switch shall also be used to turn on the pumps.

Provide MJK, Model 3400 Hydrostatic Level Transmitter.

2.07 RUN TIME METERS

A six (6) digit, non-resettable time meter shall be connected to each motor starter to record the total running time of each pump motor in hours and tenths of hours. An additional identical meter shall be connected to record the total time that both pumps run simultaneously. Meter(s) shall NEMA 4 rated and shall be U.L. recognized.

2.08 LEVEL CONTROL OPERATIONS

The panel shall include provisions for normal pump down operation using the duplex pump controller. The operation sequence shall be as follows:

1. Level 1 - All pumps off
2. Level 2 - Lead pump on
3. Level 3 - Lag pump on
4. Level 4 – High wet well level alarm / Backup Pump Start
5. Float Switch ON – Redundant On/ high high wet well level alarm

2.09 CONTROL RELAYS

Required 120 VAC and 12 VDC, 2PDT, 3PDT, 4PDT, plug-in control relays shall be provided. Relays shall be equipped with silver cadmium oxide contacts, rated at 10 amps and a dust cover. Relays shall be U.L. recognized.

2.10 CONTROL TERMIAL BLOCK

Control terminals shall be provided for connecting level control switch leads. Terminal blocks shall be rated for 600 volt use and accept a wire range of #22-8. Block shall be constructed of nylon and have insulating walls on all sides of the lug. Blocks shall be UL recognized.

2.11 GROUND LUG

Required equipment ground lugs shall be provided for grounding the enclosure. The ground lug 8 shall be suitable for the service provided to the enclosure sized per table 250-95 of the N.E.C. In all cases the enclosure must be adequately grounded per article 250 of N.E.C.

2.12 ALARM AND COMMUNICATIONS SYSTEM

A. The alarm shall indicate high level, low level, control power failure and pump #1 and #2 fail to run. The main alarm shall trigger the appropriate message for broadcast by a communications system.

B. The alarm system shall be provided with a complete set of instructions on installation, system checkout, and operation with a trouble shooting guide.

C. The flashing high water alarm light shall be mounted on the top of the control enclosure. The lens shall be made of red lexan. The lens shall be mounted, with screws, from the inside of the control panel enclosure and shall be water tight. The bulb shall be easily replaced from within the control enclosure.

D. An alarm horn or buzzer shall be mounted on the control enclosure. The horn or buzzer shall operate on 115 VAC and shall have a minimum decibel rating of 85. A pushbutton, mounted on the exterior of the control enclosure, shall be furnished to silence the audible when an alarm condition exists. Horn or buzzer shall be U.L. listed.

G. A battery back-up system shall be provided to supply power for the alarm circuits and remote communications system in case of power failure. If the A.C. power fails, the system shall automatically switch to the batteries and shall provide enough stand-by power for at least 24-hours. When A.C. power is restored, the batteries shall be automatically recharged.

2.13 NAMEPLATES

A. All major components and sub-assemblies shall be identified as to function with laminated, engraved bakelite nameplates, or similar approved means. Install nameplates on all devices or pieces of equipment for which use or identification is not readily apparent. Ensure position of nameplate is readable after equipment installation. Prior to manufacturing of nameplates, submit list-indicating designations to Engineer and City for approval.

C. All wiring shall be numbered and control panel components labeled in all panels and shall be recorded on all electrical drawings.

PART 3 – EXECUTION

3.1 ALARM AND COMMUNICATIONS SYSTEM

A. Install pump in accordance with the manufacturer's printed instructions. Secure discharge elbow with Type 316 stainless steel bolts cast into the concrete wet well. Erect guide bars plumb and parallel and mount securely to wet well. Install pump and provide initial service and lubrication. Each discharge base shall be leveled, plumbed, aligned, and wedged into position to fit connecting piping. Installation procedures shall be as recommended by the pump manufacturer and the Hydraulic Institute Standards. Perform all work under the direction of a factory-authorized representative.

B. Adjust level controls to the elevations indicated.

C. Coat outside of access cover frame in contact with concrete to prevent corrosion.

3.2 TESTING

Provide a 4-hour operating test of the pumps. Pumps shall operate continuously at their rated capacity without adjustments and without vibration or overheating. They shall be tested through full cycles of filling and emptying the wet wells and shall respond correctly to all controls, including low and high level alarms. Contractor shall be responsible for furnishing a water source for testing at no cost to the Owner.

3.3 TRAINING

Provide four hours of field training, by a factory-approved technician, in the maintenance, operation and repair of the pumps and motors.

END SECTION

SECTION 11231 – AIR DIFFUSERS

PART 1 – GENERAL

1.1 SUMMARY

A. Requirements: Provide and install coarse, floor mounted, aeration diffusion system for the aerobic digester as specified and shown. All equipment shall be provided complete with accessories, connections, supports, safety equipment, and controls necessary for a workable system, in accordance with requirements of the Contract Documents. Coordination is required by Contractor between diffuser manufacturer and steel tank supplier to determine mounting procedure of diffuser supports to steel tank flooring.

1.2 RELATED WORK

A. The requirements of Section 11000, General Equipment Requirements apply to this section.

1.3 SUBMITTALS

A. The following submittals and specific information shall be provided:

i. Descriptive literature and dimensional drawings for all equipment including, but not limited to, the air feed main, air distribution main, and diffuser assemblies indicating materials of construction, number, spacing, and location of diffusers, layout and size of air feed, and distribution mains.

ii. Description and dimensional drawing showing the proposed method of supporting the air feed and distribution piping as required to prevent uncontrolled movement due to flotation and dynamic forces.

iii. Written confirmation from steel tank manufacturer method of securing piping supports to steel tank floor is acceptable.

iv. Descriptive literature and dimensional drawings showing the proposed method of compensation for thermal expansion and contraction in the aeration system.

v. Proposed method of draining water from the aeration system piping when the aeration tanks are full of liquid.

vi. Head loss calculations for the air diffusers, system piping for the design airflow conditions specified.

vii. A testing plan designed to ensure consistently good quality and uniformity of the diffuser assemblies, including a sampling plan.

1.4 QUALITY ASSURANCE

A. Manufacturer's Experience: The aeration diffuser system including drop pipes, header pipes, distribution pipes and diffusers shall be furnished by a single manufacturer who is fully experienced, reputable, and qualified in the manufacture of the equipment to be supplied and has supplied at least 10 comparable systems in the U.S. in the last 5 years. The equipment shall be designed, constructed, and installed in accordance with the best practices and methods. List of previous installation with names of Owner, contact person, type and size of the project shall be submitted with the Bids.

B. Manufacturers, or Equal:

   i. Environmental Dynamics Incorporated, Columbia Missouri

   ii. or approved equal

1.5 AERATION DESIGN AND PERFORMANCE CHARACTERISTICS

A. The diffused aeration system (for one digester basin) shall meet the following design criteria:
   i. Average Diffuser Submergence Depth: 12.0 feet
   ii. Actual Oxygen Required (lb O2/day): 296
   iii. Design Solids Concentration (mg/L TSS): 2-3%
   iv. Minimum Alpha Correction Factor: 0.50
   v. Beta Correction Factor: 0.98
   vi. Minimum Dissolved Oxygen Concentration (mg/L): 1.0
   vii. Design Temperature of Wastewater (°C): 25
   viii. Minimum Standard Oxygen Transfer Efficiency (%): 5.0
   ix. Maximum System Airflow (scfm): 544

B. Digester basin dimensions:
   i. Number of tanks: 1
   ii. Diameter: 25’-10”
   iii. Tank Height (ft): 16
   iv. Freeboard (ft): 3
   v. Working heights (ft): 8-13

C. Mixing Requirements:
   i. Ensure mixing prevents deposition of solids in or near basin corners, behind columns, supports and incidental structural components, ensure no progressive buildup of solids exists or is such that process can be adversely affected.

   ii. The minimum airflow required for mixing purposes shall be 280 scfm.

1.6 FACTORY PERSONNEL

A. The Contractor shall furnish the services of qualified authorized factory representatives for a minimum of 2 man-days during installation and testing of all aeration equipment. Such representatives shall additionally be available for one man-day after completion of the installation and testing to instruct and train the Owner's operating personnel in the operation and maintenance of all the equipment.

1.7 TESTS

A. Upon completion of the installation, each piece of equipment and each system shall be tested for satisfactory operation without excessive noise, vibration, etc. All equipment must be adjusted and checked for misalignment, clearances, supports, and adherence to safety standards. Other performance tests required are included in the following Paragraphs of this Section.

1.8 TOOLS AND SPARE PARTS

A. One complete set of special wrenches or other special tools necessary for the assembly, adjustment, and dismantling of the equipment. All tools shall be of the best quality and furnished in labeled tool boxes of suitable design. A list of special tools to be supplied with the equipment shall be included with the shop drawings.

1.9 MATERIAL STORAGE AND PROTECTION

A. All polyvinyl chloride (PVC) components of the aeration system stored on site shall be adequately protected from prolonged exposure to direct sunlight and extreme temperature change. The materials shall be stored in a manner which prevents physical damage to the system components. Upon the completion of installation of all PVC aeration system components in the aeration tanks, the tanks shall be filled with clean water to a depth at least four feet above the highest PVC component to protect the system from sunlight and extreme temperature changes. The CONTRACTOR will be responsible for controlling the quality of the water in the aeration tanks and shall take appropriate action to control biological growth, such as algae, which may damage the aeration system.

PART 2 – PRODUCTS

2.1 GENERAL

A. Furnish and install, put in operation, and test the aeration diffuser systems for the aerobic digester and equalization tanks. For all systems there shall be furnished and installed all necessary equipment and auxiliaries whether specifically mentioned in these Specifications or not, and as required for an installation incorporating the highest standards for the type of service. The piping system shall include all necessary fittings, supports, expansion joints, valves, meters, controls, and accessories.

B. The equipment specified in this Section, including drop pipes, manifold pipes, distribution pipes, air diffusers, and supports.

2.2 DROP PIPE AND MANIFOLD

A. Drop pipe: Each drop pipe shall extend from the air main piping system at the top of the tank 3 feet above the water surface to the submerged air manifold. The material of construction shall be schedule 10, 316 stainless steel.

B. Manifold: All submerged manifolds and header components shall be schedule 40 PVC. Use of PVC piping shall only be employed when diffuser mounting system reinforces the pipe wall at each mounting location.

C. Inverts: The invert elevation of the submerged air manifold shall be the same throughout the tank. Changes in diameter shall be accomplished with eccentric reducers.

D. Pipe Connections: Connections between sections of the submerged manifold shall be flanged joints or Type 316 stainless steel band couplings. These joints shall be installed such that individual manifold sections can be rotated independently of adjacent manifold sections for alignment purposes. Once the pipe is properly aligned, the flanges shall be solvent welded onto the two adjacent pipe sections. Flanged joints shall have solvent welded flanges with 316 stainless steel bolts.

E. Expansion and Contraction: The submerged air manifold shall include an expansion-contraction system consisting of fixed supports, intermediate supports and expansion joints. Fixed supports shall anchor the manifold against longitudinal and lateral movement at the support. Intermediate supports shall allow longitudinal movement through the support. Expansion joints shall allow for longitudinal expansion and contraction within the joint. The entire system shall allow for expansion and contraction over a range of 125 degrees F.

F. Supports: Each section of the submerged air manifold shall have a minimum of 3 supports constructed of 316 stainless steel materials. Maximum support spacing shall be 10 feet. Manifold supports shall meet the expansion-contraction system requirements as described in these Specifications.

G. Manifold supports shall include manifold hold-down, adjusting and locking mechanism, cradle, cross, tee, and supporting structure. Cinch type anchor bolts shall secure the stainless steel stand to the tank floor.

H. Each manifold support shall have a cradle with a bearing surface contoured to fit a minimum of the bottom 90 degrees of the air distribution manifold. The cradle surface shall be a minimum of 2 inches wide. All supports shall include a mechanism to provide for a minimum of ±2 inches vertical and ±0.5-inch lateral adjustment for alignment of the manifold. One support for each manifold section shall include an integral device for longitudinal rotational adjustment of the manifold. All adjusting devices and mechanisms shall lock to maintain the manifold in position after the final adjustments have been made.

I. Welded Parts: All welded parts and assemblies including drop pipes, fabricated supports, flanged joints and expansion joints shall be fabricated from sheets and plates of Type 316 stainless steel. All submerged air manifolds shall be Schedule 40 polyvinyl chloride (PVC). Other non-welded parts and pieces such as nuts, bolts, washers, and follower flanges shall be made of Type 316 stainless steel. All anchor bolts shall be Type 316 stainless steel.

2.3 DISTRIBUTION SYSTEM

A. General: The distribution headers shall include header piping, support stands, factory installed diffuser element holders, joints, expansion joints and anchor bolts.

B. Distribution Headers: The distribution headers shall be constructed out of sch 40 PVC. The headers shall be fabricated in sections not to exceed 20 feet in length. Joints between sections shall be of the expansion joint type and shall permit rotation of each header section independently of adjacent header sections.

C. Supports: Each header section shall be held in place by one anchor support. Intermediate supports shall allow longitudinal and rotational movement of the header section. The distribution header supports shall be spaced at a maximum of 6.5-foot intervals. Stands shall be adjustable to permit leveling. All adjusting devices shall lock in place after the headers have been installed and leveled. Each support shall be secured to the tank floor by means of a stainless steel cinch type anchor bolt designed for 10 times the calculated normal uplift forces. All header supports shall have a vertical adjustment of ±1.5 inches.

D. Diffusers: EDI MaxAir coarse bubble diffuser assemblies shall be installed on the Schedule 40 PVC air piping using the Spectrum Saddle mounting system. Each diffuser assembly shall be factory assembled and include two diffuser units and mounting saddle. The diffuser shall be fully supported over the full length and circumference with PVC support frame. shall be held in place by two (2) Type 316 stainless steel clamps. Retainer clamps shall be crimp type. The diffuser unit shall be fully capable of operating under continuous or intermittent conditions and shall be designed with check valve capabilities to prevent entry of mixed liquor into the diffuser unit or air piping on air shutdown or interruption of air supply.

Diffuser saddle mount shall be Schedule 40 PVC construction and shall be capable of withstanding an external force of 4,800 inch-pounds without structural failure of the air distribution pipe, diffuser units connection or mounting saddle. Small diameter threaded connections to attach diffusers to the air distribution header are not acceptable. Saddle mount shall fully encompass the air distribution header and reinforce the pipe section at the diffuser assembly connection. The diffuser assembly shall mount below the air distribution header piping and provide full evacuation of entrapped water from the header through the diffuser assemblies. Systems that do not automatically purge entrapped water are not acceptable.

E. Leveling: The entire system shall be designed, manufactured, and installed in such a manner that all the diffuser elements are within ±0.125-inch of a common horizontal plane. Air distribution shall be uniform throughout the entire system and shall be uniform over the entire horizontal projected surface of each diffuser element.

PART 3 – EXECUTION

3.1 INSTALLATION

A. Contractor shall furnish, inspect, store, and install aeration system and blower components in accordance with manufacturer's written instructions and approved submittals.

B. Diffuser assemblies on a common grid shall be installed within an elevation tolerance of ±.125 inches.

C. Contractor shall provide all valves, air header piping, wall sleeves with seals, wall pipes, and concrete pedestals as necessary to complete the system as shown on the plans.

D. Air piping including blower manifold, header, and in-basin piping must be clean prior to delivering air up the diffusers.

E. Contractor shall be responsible for cleanliness of piping and may be required to manually clean pipe, or air or water flush piping as required.

3.2 START-UP

A. After installation is completed, the Contractor shall perform the following field tests in the presence of the Engineer and the Owner.

i. Fill the reactor to the bottom of the diffuser assemblies.

ii. Adjust the pipe supports and diffuser assemblies such that all diffuser units are installed within ±1/2 inches of the design diffuser elevation.

iii. Fill the reactor to a level of 2 feet above the top of the diffusers.

iv. Release air to the system and inspect the system for air leaks at all piping or diffuser connections.

v. Check all membrane for cuts or tears that may have occurred during the installation.

vi. Adjust any piping or diffusers that show leaks or disproportionate amount of airflow.

vii. Operate the blowers at the design air rate and observe air release and air distribution patterns.

viii. All water, air, power and labor associated with testing and adjustment of diffuser assemblies are to be supplied by Contractor.

3.3 MANUFACTURER'S FIELD SERVICES

A. A manufacturer's representative shall be present at the job site to inspect the installation of the equipment, start-up the system, and train operations and maintenance personnel on the supplied equipment.

B. Services including a total of one (1) trip with a total of two (2) days onsite shall be provided.

END SECTION

SECTION 11250 – MAGNETIC FLOW METER

PART 1 – GENERAL

1.1 SUMMARY

A. Provide magnetic flow meter of the type and size indicated, and at the locations shown on the drawings.

1.2 RELATED WORK

A. The requirements of Section 11000, General Equipment Requirements apply to this section.

1.3 SUBMITTALS

A. Submit complete dimensioned shop drawings including wiring diagram for meter.

B. Submit manufacturer's certification of accuracy for meter, stating that meter was factory calibrated to the required limits of accuracy.

C. Submit complete operation and maintenance manual.

1.4 FACTORY REPRESENTATIVE

A. An authorized factory representative shall review the installation of the meter and observe the flow of wastewater through the meter. He shall provide a written report stating that the meter is correctly installed and calibrated and is functioning in accordance with the requirements of this section. Representative shall provide a minimum of four hours (4) on-site for this purpose, which shall include instructional time for operations personnel.

PART 2 – PRODUCTS

2.1 MAGNETIC FLOW METER

A. The magnetic flow meter shall be a MJK MagFlux electromagnetic flow tube/sensor, with a Siemens MAG 6000 integrally-mounted transmitter, of the size indicated on the drawings.

i. Lining: Polytetraflurorethylene

ii. Housing and Flanges: Polished 316 stainless steel.

iii. Electrodes: Type 316 stainless steel.

iv. Power Requirements: 115 Volt AC, 60 Hertz.

v. Output: 4-20 ma DC signals fully isolated, proportional to flow velocity and linear.

vi. Display: Flow rate and total flow.

vii. Zero Return: Constant zero output during empty pipe conditions. Absolute zero stability.

B. Accessories

i. Stainless steel protective cap and fittings

ii. Communication module compatible with the MBR Operator Interface

PART 3 – EXECUTION

3.1 INSTALLATION

A. Install magnetic flow meter in accordance with the manufacturer's printed instructions. Insure that flow is in proper direction.

3.2 TESTING

A. Perform pressure and leak testing of meters as part of the pipeline testing.

B. Demonstrate that meter accurately measures flow during the operating demonstration. Recalibrate meter if it does not read within the accuracy limits stated. Recalibration must be done by a factory-trained representative of the meter manufacturer.

END SECTION

SECTION 11261 –DAVIT CRANES

PART 1 – GENERAL

1.1 SUMMARY

A. General Description: This section specifies the stationary and portable davit cranes and bases to be used and supplied at the North and South Pump Stations, at the wastewater treatment plant headworks for the equalization tank pumps and jet aerator, and the on-site wastewater plant drain pump station. One (1) stationary davit crane and base will be installed at each of the North and South Pump Stations, and two (2) portable davit cranes will be supplied and used for the WWTP for all locations. Davit crane bases will be installed as indicated in the Contract Drawings.

1.2 RELATED WORK

A. Section 11000 – General Equipment Requirements

1.3 SUBMITTALS

A. Drawings and descriptive information in sufficient detail to show the kind, size, weight, arrangements, operation, component materials and devices; external connections, anchorages, and supports required; performance characteristics; and dimensions needed for installation.

B. Description information including catalog cuts and manufacturers specifications for all components.

1.4 QUALITY ASSURANCE

A. Manufacturer shall be registered ISO 9001:2000 compliant with an independent certification agency approved by the International Organization for Standardization.

PART 2 – PRODUCTS

2.1 ACCEPTABLE PRODUCTS

A. The stationary davit crane shall be Thern Admiral 3000 with Hand Operated Spur Gear Manual Winch rated to 10,000 lb capacity and permanent-mounted base for the North and South Pump Station, or approved equal.

B. The portable davit crane shall be Thern Commander 1000, Series with Hand Operated Winch and permanent-mounted pedestal base for the Wastewater Treatment Plant, or approved equal.

2.2 EQUIPMENT FEATURES

A. Davit Crane

i. Product shall be designed with an ultimate design factor greater than 3:1 for all components including lifting winch and base.

ii. Hook Reach: boom shall have a maximum hook reach as identified below as measured from mast center to hook center when the boom is horizontal.

North and South Pump Stations: 108 inches
Wastewater Treatment Plant: 60 inches

iii. Lift Below Floor Level: The lift below floor level are as follows:

North Pump Station: 28 feet
South Pump Station: 28 feet
Wastewater Treatment Plant: 16 feet

iv. Boom Sheave: wire rope shall pass over a sheave at the end of the boom. Sheave shall have a needle bearing.

v. Rotation: mast and boom shall rotate 360 degrees in the base on roller and tapered roller bearings, with a rotational handle attached to mast to facilitate rotation.

vi. Nametag: davit crane shall be labeled with a non-corrosive metal identification plate labeled or imprinted with the manufacturer's name, model number, serial number, capacity rating, and other essential information.

vii. Finish: crane shall have a 3 step epoxy finish consisting of a primer, an epoxy coat, and a top coat of polyurethane.

B. Crane Base

i. Crane base shall be gusset style and permanently mounted.

C. Lifting Winch

i. Lifting Winch: winch shall have machine cut gears, an adjustable handle that mounts securely to the drive shaft, bronze and radial ball bearings, and a positive load holding Weston style brake able to stop and hold the load automatically if the winch handle is released.

ii. Cable Anchor: Lifting winch shall include a quick disconnect feature allowing quick attachment and detachment of wire rope equipped with a swaged end fitting.

D. Wire Rope

i. Wire Rope: wire rope construction shall be 7 x 19 type 304 stainless steel cable.

ii. Hooks: latch type hooks shall be used and shall be either non- rotating eye type or swivel type to allow 360 degree rotation under all load conditions. Hooks shall be heat treated drop forged type 304/316 stainless steel.

PART 3 – EXECUTION

3.1 EXECUTION

A. The stationary davit crane and base shall be installed in accordance with manufacturer's recommendations.

END SECTION

SECTION 11261 – STATIONARY DAVIT CRANE

PART 1 – GENERAL

1.1 SUMMARY

A. General Description: This section specifies the stationary davit crane and base to be used and supplied at the North and South Pump Stations, Headworks for the Equalization tank pump and Jet Aerator, and the Wastewater Pump Station. One (1) stationary davit crane and base will be installed at the North and South Pump Station each, and two (2) Davit cranes will be supplied and used for the WWTP for all locations. Davit crane bases will be installed as indicated in the Contract Drawings.

1.2 RELATED WORK

A. Section 11000 – General Equipment Requirements

1.3 SUBMITTALS

A. Drawings and descriptive information in sufficient detail to show the kind, size, weight, arrangements, operation, component materials and devices; external connections, anchorages, and supports required; performance characteristics; and dimensions needed for installation.

B. Description information including catalog cuts and manufacturers specifications for all components.

1.4 QUALITY ASSURANCE

A. Manufacturer shall be registered ISO 9001:2000 compliant with an independent certification agency approved by the International Organization for Standardization.

PART 2 – PRODUCTS

2.1 ACCEPTABLE PRODUCTS

A. The stationary davit crane shall be Thern Commander 2000 with Hand Operated Winch and permanent-mounted base for the North and South Pump Station, or approved equal.

B. The stationary davit crane shall be Thern Commander 1000 with Hand Operated Winch and permanent-mounted base for the Wastewater Treatment Plant, or approved equal.

2.2 EQUIPMENT FEATURES

A. Davit Crane

i. Product shall be designed with an ultimate design factor greater than 3:1 for all components including lifting winch and base.

ii. Hook Reach: boom shall have a maximum hook reach of at least 106 inches measured from mast center to hook center when the boom is horizontal.

iii. Hook Height: hook height shall be adjustable by moving the boom up or down between horizontal and 45 degrees from vertical, with a minimum of 76 inches between the lowest position and the highest position.

iv. Boom Angle: boom angle shall be fixed or adjustable with a hand operated screw jack acting to raise or lower the boom between horizontal and 45 degrees from vertical.

v. Boom Sheave: wire rope shall pass over a sheave at the end of the boom. Sheave shall have a needle bearing.

vi. Clearance: minimum height of the boom shall be 68 inches between mounting surface and the underside of the boom.

vii. Rotation: mast and boom shall rotate 360 degrees in the base on roller and tapered roller bearings, with a rotational handle attached to mast to facilitate rotation.

viii. Fastening Pins: crane components shall be fastened together using solid steel pins.

ix. Winch Location: lifting winches shall be located such that the center point of the drive shaft is no more than 18 inches in front of the centerline of the mast.

x. Nametag: davit crane shall be labeled with a non-corrosive metal identification plate labeled or imprinted with the manufacturer's name, model number, serial number, capacity rating, and other essential information.

xi. Finish: crane shall have a 3 step epoxy finish consisting of a primer, an epoxy coat, and a top coat of polyurethane.

B. Crane Base

i. Crane base shall be gusset style and permanently mounted.

C. Lifting Winch

i. Lifting Winch: winch shall have machine cut gears, an adjustable handle that mounts securely to the drive shaft, bronze and radial ball bearings, and a

positive load holding Weston style brake able to stop and hold the load automatically if the winch handle is released.

ii. Cable Anchor: Lifting winch shall include a quick disconnect feature allowing quick attachment and detachment of wire rope equipped with a swaged end fitting.

D. Wire Rope

i. Wire Rope: wire rope construction shall be 7 x 19 type 304 stainless steel cable.

ii. Hooks: latch type hooks shall be used and shall be either non- rotating eye type or swivel type to allow 360 degree rotation under all load conditions. Hooks shall be heat treated drop forged type 304/316 stainless steel.

PART 3 – EXECUTION

3.1 EXECUTION

A. The stationary davit crane and base shall be installed in accordance with manufacturer's recommendations.

END SECTION

SECTION 11262 – POLYMER FEED SYSTEMS

PART 1 – GENERAL

1.1 SUMMARY

A. Polymer feed system for neat polymer addition to aerobically digested sludge prior to process through centrifuge dewatering system. Polymer system equipment, including controls, shall be part of a packaged system as supplied by the screw press manufacturer

1.2 RELATED WORK

A. Section 11217 Rotary Lobe Pumps

B. Section 11334 Sludge Dewatering Screw Press

1.3 SERVICES OF MANUFACTURER

A. The feeding system equipment shall be calibrated under the direction of an authorized service representative.

B. Inspection, Startup, and Field Adjustment: An authorized representative of the manufacturer shall visit the site for not less than one day to furnish the indicated services.

C. Instruction of Owner's Personnel: The authorized service representative shall also furnish the indicated services for instruction of the owner's personnel in the operation and maintenance of the equipment including step-by-step troubleshooting procedures with necessary test equipment for not less than one day.

1.4 OWNER'S MANUAL

The contractor shall provide, as part of the owner's manual, written certification that the calibration has been performed on the feed system and found to be in full compliance with the requirements of the Contract Documents

PART 2 – PRODUCTS

2.1 Equipment Configuration and Materials

A. The polymer feed system shall include the following components:

1. Multi-zone hydro-mechanical mixing chamber
2. Dilution water assembly
3. Progressive cavity neat polymer metering pump
4. Solution discharge assembly

5. Controls
6. Power
7. Equipment skid
8. Spare parts

B. Multi-Zone Hydro-Mechanical Mixing Chamber

i. Provide a multi-zone hydro-mechanic mixing chamber device capable of operating on a plant water pressure of 30 psi. The polymer system shall be capable of producing its mixing energy independent of plant water pressure through a variable intensity, controllable stainless steel mechanical mixer. Plastic or brass impellers are not acceptable. The polymer system shall be capable of producing high, non-damaging mixing energy at all flow rates without damage to the polymer's molecular structure. To prevent polymer build-up, the mixing chamber shall maintain a high velocity in the entire chamber. At no time shall there be low velocity within any portion of the mixing chamber.

ii. Both the mechanical and non-mechanical mixing zones shall be clear Lexan plastic to view the mixing action and blending effectiveness. Opaque PVC or acrylic chambers are not acceptable.

iii. The mixing chamber shall have a maximum rated pressure of 100 psi. The chamber shall be provided with a pressure relief on the mixing chamber, adjustable between 25 and 100 psi. The valve shall have a brass or PVC body with stainless steel, Viton and Teflon internals. Brass pressure relief valves shall not be acceptable. All holes tapped in plastic shall have helicoil inserts for increased strength.

iv. A variable speed stainless steel mechanical mixing impeller shall be provided to handle a range of polymers. Plastic impellers are not acceptable. The impeller shall be designed to produce both axial and radial flow to optimize mixing effectiveness and to effectively induce high, non-damaging mixing energy over the systems full-flow range. The impeller shall be controlled by an SCR motor controller and driven by a wash-down duty motor. The mixer drive shaft shall be sealed by a mechanical seal which shall have an integrally mounted and factory plumbed seal flushing valve. A drain port behind the seal shall be provided in the mixing chamber to drain the polymer solution in the case of a seal failure. The seal shall be easily accessible for replacement. Polymer systems without a seal flushing system shall not be considered. All bearings shall be external from the mixing chamber. Internal bearings shall not be acceptable. Polymer systems which rely on high shear and or constant speed impellers or systems that rely on close tolerances for blending shall not be acceptable.

v. Provide a neat polymer check valve designed to isolate neat polymer from dilution water. The valve shall be designed with an open, unobstructed path to the valve seat. The valve body shall be constructed of Teflon with Viton seals. The valve poppet and spring shall be stainless steel and designed to prevent polymer from flowing through the spring, causing build-up and plugging. Plastic spring covers shall not be used. The valve shall be readily accessible for cleaning and shall not require tools for removal, cleaning or replacement. conventional check valves, valves that rely on ball seals, and/or check valves that are installed inside the mixing chamber, or which require mixing chamber disassembly for servicing shall not be accepted. The locking pin used to hold the valve in place shall be attached to the mixing chamber with a lanyard.

C. Dilution Water Assembly

i. Provide a 1 inch FNPT dilution water inlet connection.

ii. The dilution water flow rate shall be monitored by a Rotameter type flow meter with a range of 1 to 10 gpm. A union shall be provided on the Rotameter to allow easy removal for cleaning.

iii. The assembly shall have an electric solenoid valve for on/off control of total dilution water flow.

iv. A differential pressure type low water differential pressure alarm shall be provided. The switch shall be adjustable between 10 and 25 psi.

v. Provide a 2-1/2 inch stainless steel liquid filled pressure gauge to monitor dilution water inlet pressure.

D. Progressive Cavity Neat Polymer Metering Pump

i. The unit shall have one (1) progressive cavity neat polymer metering pump integrally mounted on the polymer system skid. The metering pump shall have a range of 0.25 to 5 GPH. The pump shall be a positive displacement, progressive cavity type constructed of stainless steel and Viton. The pump seal shall be packing type. Mechanical seals shall not be used. The pump shall have a minimum of two stages to minimize slip. A TENV 90 VDC motor shall drive the pump. An in-line or right angle gear reducer shall be provided to produce a maximum pump shaft speed of not more than 600 RPM. The motor shall be controlled by an SCR motor controller located in the polymer system control panel.

ii. Provide a 250 ml calibration column with two (2) full port PVC ball valves having Viton o-rings. The column shall be calibrated for a one minute draw-down and read in GPH and milliliters.

iii. Provide a thermal type loss of polymer flow sensor.

E. Solution Discharge Assembly

i. Provide a 1 inch FNPT polymer solution discharge connection.

ii. Provide a 2-1/2 inch stainless steel liquid filled pressure gauge to monitor system discharge pressure.

F. Controls

i. A polymer system control panel integral to the polymer system's frame shall be provided. The enclosure shall be rated NEMA 4X and constructed of FRP. The polymer system control panel shall consist of all digital displays, potentiometers, switches, lights, relays, and other control devices required for a complete operable system.

ii. The polymer system control panel and all components shall be industrial duty. All skid mounted electrical components interconnected to the polymer system control panel shall terminate at numbered and labeled terminal blocks. The terminal blocks shall be sized for 14 gauge wire. Wires shall be neatly run through wire race-way and numbered with adhesive type labels.

iii. The polymer system control panel shall be positioned such that there are no obstructions in front of the polymer system control panel in accordance with relevant NFPA requirements. 4.

iv. Provide the following controls and indicators for the polymer system.

Operator Interface – Discrete Selector Switch

(1) System ON / OFF / Remote
(2) Ten-Turn Potentiometer – progressive cavity neat polymer metering pump control
(3) One-Turn Potentiometer

Status / Alarm Indicators

(1) Main Power ON
(2) System Running
(3) LCD Display of progressive cavity neat polymer metering pump rate
(4) Low Water Differential Pressure Alarm
(5) Low Polymer Flow Alarm

Inputs, signals by others

(1) Remote Start / Stop, discrete dry contact
(2) Pacing Signal Based on Process Flow, 4-20mA

Outputs

(1) System Running, discrete dry contact
(2) Remote Mode, discrete dry contact
(3) Low Water Differential Pressure Alarm, discrete dry contact

G. Power

i. 1 HP; 120 VAC, 1 Ph, 60 Hz

ii. A circuit breaker on the main control circuit and on each motor shall be provided as manufactured by Allen Bradley or approved equal. Fuses shall not be used for circuit protection.

H. Equipment Skid

i. The polymer system's frame shall be of rugged Type 316 stainless steel construction. No mild steel shall be used. All piping shall be rigidly supported.

PART 3 – EXECUTION

3.1 INSTALLATION

A. General

i. Products and equipment shall be installed in accordance with the manufacturer's written instructions.

ii. The polymer system shall be operated by the centrifuge control panel. All components of the polymer system control panel shall be integrated with the dewatering screws press control panel.

iii. The Contractor shall connect all piping and ensure no stress is imparted to piping after connection.

END SECTION

SECTION 11270 – STATIC MIXER

PART 1 – GENERAL

1.1 SUMMARY

A. The work of this section includes providing inline type static mixer and all appurtenant work, complete and operable. Coordination of the static mixer shall be under the responsibility of the Screw Dewatering Press manufacturer.

1.2 RELATED WORK

A. Section 11000 General Equipment Requirements

1.3 SPECIFICATIONS AND STANDARDS

A. The current editions of the following applies to the work of this section:

ANSI/AWWA B 16.1	Cast Iron Pipe Flanges and Flanged Fittings Class 25, 125, 250 and 800

1.4 SHOP DRAWINGS AND SAMPLES

A. Shop Drawings shall comply with Section 01300 and include:

i. Manufacturer's product data including catalog cuts, materials, and details.

ii. Typical head loss data for each mixer in the form of curves showing total head loss across the mixer, including entrance and exit losses, versus flow rate over the indicated range of flows and identifying the head loss at the guarantee point.

iii. A manufacturer's certification for each mixer that the total head loss will be no greater than the specified value at the guarantee point.

1.5 OWNER'S MANUAL

A. Owner's Manual shall comply with the requirements of Sections 01300 and 11000.

1.6 FACTORY TESTING

A. Comply with the requirements of Section 11000.

PART 2 – PRODUCTS

2.1 MIXER SCHEDULE

A. Service Conditions:

Primary Flow Stream	Aerobic Digested Sludge
Additive Stream	Liquid Polymer
Downstream Process	Screw dewatering Press
Max Pressure, psi	25
Flow Range, GPM	7 to 25

2.2 MATERIALS

A. The static mixer elements shall be rigid devices positioned in the body of the mixer which divide and recombine the flow to achieve mixing as fluids progress axially along the mixer body. Orifices shall not be permitted.

B. Each static mixer body shall include full-face flanges drilled to ANSI B16.1, Class 125.

C. All fasteners shall be Type 316 stainless steel.

2.3 NAMEPLATES

A. Nameplates of engraved or stamped stainless steel shall be fastened to the mixers. The following information shall be included on the nameplates:

i. Equipment number

ii. Performance data including head loss (in inches W.C. or psig, as appropriate) at the guarantee point.

B. In lieu of stainless steel nameplates, nameplates for static mixers of FRP construction can be made of a durable material laminated onto the body of the mixer during manufacture.

2.4 MANUFACTURERS

A. Products shall be manufactured by one of the following, (or equal):

i. Koch

ii. Komax

PART 3 – EXECUTION

3.1 INSTALLATION

A. Installation, handling, and storage of the static mixers shall be in strict accordance with the manufacturer's written recommendations and requirements.

3.2 FIELD TESTING

A. Functional Testing Prior to Plant Startup:

i. After certification of proper installation by the Manufacturer's representative, each mixer shall be hydrostatically leak tested with the surrounding piping.

B. Performance Testing During Plant Startup:

i. During plant startup, each static mixer shall be performance tested to demonstrate conformance with the guarantee point listed in the mixer schedule.

END SECTION

SECTION 11293 – SLIDE GATES

PART 1 – GENERAL

1.1 SUMMARY

A. General Requirements: The contractor shall furnish and install all slide gates in the locations shown, complete and operable including manual operators, frames, wall thimbles, bracing, mountings, coatings, etc., in accordance with the requirements of the Contract Documents.

1.2 RELATED WORK

A. Section 11000 General Equipment Requirements

1.3 REFERENCES

A. Comply with the applicable reference specifications as specified in the General Requirements.

1.4 SUBMITTALS

A. Submittals shall be made in accordance with the General Requirements.

1.5 QUALITY ASSURANCE

A. Comply with Section 11000 "General Equipment Requirements."

B. The leakage allowance for sluice gates only shall not exceed 0.1 gpm/ft. of seating perimeter under 20 ft. of seating head, and 0.2 gpm/ft. under 20 ft. of unseating head, to meet ANSI/AWWA C-501.

C. All of the equipment specified under this Section shall be furnished by a single manufacturer with a minimum of 20-years of experience designing and manufacturing slide gates. The manufacturer shall have manufactured stainless steel slide gates of the type described herein for a minimum of 20 similar projects.

D. The sealing system shall be certified and tested for operation and performance to leakage specifications compliant with AWWA C-561 for a minimum of 100,000 cycles.

E. The project design is based on the Waterman SS-251-1 Series Fabricated Slide Gate as manufactured by Waterman Valve of Exeter, California or approved equal.

F. To insure quality and consistency, the slide gates listed in this section shall be manufactured and assembled in a facility owned and operated by the slide gate manufacturer. Third-party manufacturers contracted for fabrication and assembly of the slide gates will not be permitted.

PART 2 – PRODUCTS

2.1 SLUICE GATES

A. General

All gates shall be new and of current manufacture. They shall be adequately braced to prevent warping and bending under the intended usage. Slide gates shall be furnished with a handwheel, having a 2:1 gear ratio, or 2-inch square operating nut, as shown, and shall conform to ANSI/AWWA C501, except as otherwise specified herein. The slide gate shall be as manufactured by Waterman, Series 22-251-1.

B. The gates shall be either self-contained with yoke and bench stand operators, or non-self-contained with separate stem guides and operator, in accordance with the requirements of these specifications.

C. The gates shall be compliant with the latest version of AWWA C561.

D. Materials:

i.	Frame, Yoke, Cover slide, wall thimble	316L, stainless steel
ii.	Seat/seal & Stem Sleeves	Ultra-high-molecular-weight Polyethylene
iii.	Cord Seal	Nitrile ASTM D2000
iv.	Stems	316 Stainless steel
v.	Stem Cover	Clear Butyrate
vi.	Stem Guides	316L stainless steel UHMW Bushed
vii.	Wall Bracket	316L Stainless steel
viii.	Desdatals	316L Stainless steel
ix.	Fastners and anchor bolts	316 Stainless steel
x.	Finish	Polyamide Epoxy

E. Frames and Slides

i. The gate frame shall be composed of stainless steel guide rails with UHMW seat/seals upstream and downstream. The seat/seals shall form a tight seal between the frame and the slide (disc). The guides will be of sufficient length to support ½ the height of the slide when in the full open position.

ii. Yoke shall not deflect more than 1/360th of the span under full head break load.

iii. Seals shall be replaceable without removing the frame from the wall. In the case of embedded gates, they shall be constructed in a manner that allows replacement of the seals without removal of the gate frame from the embedment.

E. Stems and Stem Guide

i. Guides shall be adjustable with split stem sleeves. Guides shall be spaced per the manufacturer's recommendations. The stem L/r ratio shall not exceed 200.

ii. Stem threads shall be machine cut 29 degree full Acme or stub Acme type.

iii. Nominal diameter of the stem shall not be less than the crest of the threaded portion

F. Wall Thimbles

i. Unless otherwise shown, all sluice gates shall be furnished and installed with cast iron, F-pattern, wall thimbles to match the thickness of the walls in which they are installed. These thimbles shall be supplied by the manufacturer of the gates, and they shall fit the bolt dimensions of the gates. All studs shall be of Type 316 stainless steel.

PART 3 – EXECUTION

3.1 INSTALLATION

A. Slide gates shall be installed in strict accordance with the manufacturer's printed recommendations and the requirements herein. Operators shall be located to avoid interference with handrails and structural members.

B. Just prior to setting each gate, a 1/8-inch thick layer of mastic grade polysulfide elastomeric sealant shall be applied to the back of the gate frame. After setting the gate, the nuts shall be run down on the anchor bolts just far enough to make them snug and to cause the rubber sealant to begin to ooze out, but not far enough to produce any significant stress to the frame. Any excess sealant at the edges shall be removed. The sealant shall be allowed to cure for at least 7 days, after which the anchor bolt nuts shall be tightened to their final positions. If gaskets are being used, they shall be installed over the studs in one piece, or dovetailed and cemented with a liquid-type gasket material.

C. All damage to surface coatings incurred during shipment and/or installation shall be repaired to the satisfaction of the engineer prior to installation.

END SECTION

SECTION 11300 – MEMBRANE BIOREACTOR SYSTEM

PART 1 - GENERAL

1.1 SUMMARY

The Contractor shall furnish and install the equipment furnished by KUBOTA Membrane USA Corporation or approved equal. The MBR system shall be composed of two steel (2) skid mounted units. One unit shall be a steel oxic tank and the other shall be the MBR system composed of an anoxic tank, secondary oxic tank; membrane units; MCC; blowers; pumps; clean-in-place tanks and pumps; and interconnecting piping between the two skid mounted units and all piping supports.

The Contractor shall furnish and install all equipment, interconnecting piping, electrical components and supports associated with the equipment. Some of the piping and supports are to be furnished by MBR System Supplier. The Contractor shall coordinate with the MBR System Supplier what is to be furnished by MBR System Supplier, and request clarification and/or bring discrepancies to the immediate attention of the Owner or Owner's Representative for clarification.

1.2 DEFINITIONS

A. MBR System Manufacturer and Supplier (call the MBR System Supplier from here on in this document): The company responsible for the manufacturing of the membranes to be used in this project and for providing all equipment and services as described herein and for providing warranty support.

B. Contractor: The company responsible for construction and installation of the MBR System, including, but not limited to, site preparation, tank and basin construction, and mechanical and electrical installation.

C. Engineer: The Engineer is the prime professional with respect to the project.

D. MBR System: A collective term for all process and membrane zones that make a complete biological treatment system.

E. Process Train: A stand-alone combination of Process Zones designed and operated to achieve specific treatment objectives.

F. Process Zone: An area in a Process Train designed and operated to meet a specific biological treatment objective.

G. Membrane Zone: Any Membrane Tank or MBR containing membranes.

H. Membrane Tank: A tank or basin containing one or more large membrane sub-units that are operated as one unit. A Membrane Tank has an HRT at Average Design Flow (ADF) of less than 1.0 hr.

I. MBR: A tank or basin containing one or more large membrane sub-units that are operated as one unit. A MBR has an HRT at Average Design Flow (ADF) of more than 1.0 hr

J. Membrane Bank: A grouping of large membrane subunits which share a common permeate header, a common air supply header, and that are taken off-line as an entity for any type of Clean-In-Place (CIP) procedure.

K. Submerged Membrane Unit (SMU): An assembly consisting of one or more SMU Subunits ("racks", "cassettes", etc.) and an integral diffuser assembly.

L. Membrane Cartridge: The smallest assembled unit of a delivered system that is designed to be removed from a SMU and replaced as a complete unit. This may be flat sheets attached to a support structure and may be referred to as a "module", "cassette", or other terms.

M. Plant Hydraulic Loading Criteria: The net permeate flow rate over a given period of continuous operation accounting for CIP procedures and relaxation. Production capacity requirements are given in terms of:

   i. Average Annual Flow (AAF): The net daily flow requirement generally occurring during dry weather conditions.

   ii. Maximum Monthly Flow (MMF): The net daily flow requirement generally occurring during wet weather conditions.

   iii. Peak Week Flow (PWF): A net daily flow total generally occurring during wet weather conditions

   iv. Peak Daily Flow (PDF): The net daily flow required during peak daily flow conditions.

   v. Peak Hourly Flow (PHF): A net peak hourly flow requirement generally occurring during wet weather flow conditions.

   vi. Peak Instantaneous Flow: The highest allowable flow rate under any conditions.

N. Flux: Gallons of permeate flow per day per square foot of membrane area (gfd). Additional definitions of flux that are used to characterize design criteria and membrane performance include:

   i. Instantaneous Flux: Calculated by dividing measured permeate flow rate by working membrane area at any instant.

   ii. Gross Flux: See Instantaneous Flux.

   iii. Net Flux: Calculated by dividing the total amount of permeate produced (available for discharge) in a given time frame by the working membrane area.

O. Backwash: Synonymous with backpulse and backflushing. Backwashing is any instance where water and or a chemical solution are charged to membranes in the reverse direction of permeate flow with a membrane soak time less than 0.5 hr. A

Backwash is performed in-situ and in mixed liquor or activated sludge. Typical backwash characteristics are provided below.

Summary of Backwash Characteristics

Parameter	Value (Condition)	Type
Membrane Soak Time	≤ 0.5 hr	Primary
Conducted In Mixed Liquor	Yes	Primary
Conducted In-Situ	Yes	Secondary
Typical Duration	15-60 sec	Secondary
Fill Direction	Reverse	Secondary
Tank Fill/Drain	No	Secondary
Chemicals Required	No	Secondary

P. Maintenance Clean: Synonymous with chemically enhanced backwash and CIP. A Maintenance Cleaning is performed in-situ and in mixed liquor or activated sludge. The procedure is conducted by charging cleaning chemicals to membranes in the reverse direction of permeate flow with a soak time lasting more than 0.5hr. Typical Maintenance Cleaning characteristics are provided below.

Summary of Maintenance Cleaning Characteristics

Parameter	Value (Condition)	Type
Membrane Soak Time	> 0.5 hr	Primary
Conducted In Mixed Liquor	Yes	Primary
Conducted In-Situ	Yes	Secondary
Typical Duration	0.5 hr – 2.0 hr	Secondary
Fill Direction	Reverse	Secondary
Tank Fill/Drain	No	Secondary
Chemicals Required	Yes	Secondary

Q. Recovery Cleaning: Synonymous with intensive cleaning and CIP. A Recovery Cleaning is performed in-situ or ex-situ and in water or dilute chemical. The procedure is conducted by charging cleaning chemicals to membranes in either direction with variable soak times. Typical Recovery Cleaning characteristics are provided below.

Summary of Recovery Cleaning Characteristics

Parameter	Value (Condition)	Type
Membrane Soak Time	Optional	Primary
Conducted In Mixed Liquor	No	Primary
Conducted In-Situ	Optional	Secondary
Typical Duration	6.0 hr – 24.0 hr	Secondary
Fill Direction	Optional	Secondary

Tank Fill/Drain	Optional	Secondary
Chemicals Required	Yes	Secondary

R. Mechanical Cleaning: Synonymous with manual cleaning, physical cleaning and hand cleaning. Mechanical Cleaning is any instance where membranes are cleaned by hand or machine (water jetting or other) for the purposes of removing fouling or localized dewatering.

S. Localized Dewatering: Synonymous with clogging, sludging and plugging. Localized dewatering is the excessive accumulation of solids at a membrane surface in the form of refractory cake and generally in discrete, localized areas. Often caused by excessive filtration in combination with unequal or inadequate air scouring.

T. Days: Defined as calendar days.

U. In-Situ: Inside the normal service area and submerged in mixed liquor.

V. MLSS: Mixed liquor suspended solids reported as mg/l.

W. Permeability: Equals the instantaneous flux rate divided by the transmembrane pressure (TMP). The units of permeability are gfd/psi.

X. Relaxation: A temporary suspension of membrane filtration with continued air scouring for the purpose maintaining treatment capacity or reducing CIP requirements.

Y. Transmembrane Pressure (TMP): The effective pressure differential across the membrane during normal operation.

1.3 DESCRIPTION OF WORK

A. This Section specifies the requirements for the furnishing, installing, testing, training, Startup, and Warranty Support of all process equipment required for the construction of a new wastewater treatment plant utilizing a submerged membrane microfiltration bioreactor system for the treatment of wastewater.

B. The MBR System Supplier must be the Submerged Membrane Unit (SMU) manufacturer and shall furnish and commission the MBR System as describe in this specification, inclusive of all equipment, instrumentation, scope-specific piping systems, controls, integration, and warranty support.

C. The MBR System Supplier shall provide the MBR Product Engineering and Design Services in support of the treatment system design as described in this specification.

D. The Contractor shall furnish all labor, rigging, materials, and incidentals required for the installation of the MBR System in accordance with the installation instructions provided by the Supplier. Once installed, the MBR System shall be complete and operational with all control equipment and accessories as specified herein and described in the Contract Documents.

E. The Engineer is responsible for coordinating the Work with the services of others involved in the project. The Engineer shall decide as to the quality and acceptability of services and materials furnished and Work performed. All questions which may arise as to the interpretation of any or all Plans and Specifications and all questions as to the acceptable fulfillment of the Contract on the part of the Contractor and Suppliers shall be resolved by the Engineer.

F. The MBR System Supplier must clearly identify in detail any and all exceptions to the Services and Scope of Supply described in this Specification.

1.4 SUBMITTALS

A. Project Submittal: The SMU Manufacturer which must also be the MBR System Supplier shall submit to the Engineer the complete descriptive information for all equipment, instrumentation, and component in the Supplier's Scope of Supply for the Engineer's approval prior to purchase of equipment. The Supplier is to provide two hard-copies and two CDs containing all submittal information organized and by component, clearly marking options, models, materials, etc. The Project Submittal shall contain the following:

i. Membrane installation drawings, detailing membrane unit dimensions, materials, weights, locations of lifting lugs/points, and anchor bolt locations.

ii. MBR basin mechanical layout drawings, detailing the number of membrane units, air and permeate piping distribution, piping supports, in-basin instrumentation and valves, and all other components comprising the MBR basin systems. Drawings with detail information in plan and elevation/section views and include details as necessary to completely describe the installation requirements. Drawings will be based on the basin/structural design provided by the Engineer.

iii. Plan view equipment and instrument drawings showing the location of all components provided by the MBR System Supplier. Locations and installation details are to be coordinated with the Engineer's drawings to avoid conflicting information.

iv. MBR System Supplier's literature for all equipment in scope of supply will include (as applicable):

a. Pump curves

b. Blower curves

c. Mixer velocity distribution profiles

d. Materials of construction

e. Shop drawings showing all dimensions, sizes and locations of anchors

f. Minimum, maximum, and design duty points (flow rates and pressures/TDH)

g. Unit performance and efficiency data

h. Motor horsepower and voltage

i. Complete wiring and control diagrams which show the point of connection for the power supply and control system

j. All project-specific installation data for used by the Contractor.

v. Where manufacturers' standard literature is submitted, it shall be clearly marked to indicate which features are to be furnished under this contract.

vi. Process and Instrumentation Diagrams (P&IDs) showing all equipment and instrumentation which will be controlled by the MBR System Supplier control system, <u>including components provided by others</u>. P&IDs will show components supplied by MBR System Supplier. Unless otherwise directed by the Engineer, the MBR System Supplier is responsible for establishing the tagging scheme for the P&IDs. Tagging scheme will assign a unique tag to all components and their associated I/O. Tagging scheme will organize components by subsystem and train.

vii. Instrumentation list and manufacturers' literature and cut sheets, clearly identifying manufacturer, models, ranges, materials of construction, installation details, power supply voltage, wiring information.

viii. Valve list and manufacturers' literature and cut sheets, clearly identifying manufacturer, models, Cv range, materials of construction, pressure rating, and dimensions.

ix. Valve actuator manufacturers' literature and cut sheets, clearly identifying models, motor horsepower and voltage, control wiring, installation/connection details, torque rating, actuation times, duty cycle, and materials of construction.

x. Control panel drawings, detailing the interior and exterior layouts, components, panel dimensions, and panel materials of construction and NEMA rating.

xi. Control panel component manufacturers' literature, clearly denoting model numbers of all PLC components, relays, terminal blocks, power supplies, buttons, switches, fuse blocks, etc.

xii. Control panel wiring schematics.

xiii. Warranty information, detailing membrane design fluxes for all seasonal flow conditions.

xiv. System start-up and test procedures.

B. Installation and Operations Manual (IOM): The MBR System Supplier shall furnish an Installation and Operations Manual at least 2 weeks prior to the delivery of the

Supplier's equipment on site. The IOM will include Supplier and manufacturer's manuals and drawings detailing dimensions, locations, wiring information, and any other information necessary to convey the correct assembly and installation of the MBR System components provided by the Membrane Manufacturer and MBR System Supplier. In addition to installation documents, the IOM shall include requirements for the Mechanical Inspection and a schedule of events for the System Commissioning. The Supplier is to provide three hard-copies and two CDs containing all information organized by component.

C. Plant Operations Manual (POM): The MBR System Supplier shall furnish a Plant Operations Manual within [10] weeks after completion of the System Commissioning. The supplier is to provide three hard copies and two CDs containing the following information:

i. HMI (operator interface) User's manual, detailing screens and functions within the operator interface program.

ii. Process variables and final control narrative

iii. As-built P&IDs

iv. As-built electrical schematics and control panel drawings

v. Safety guidelines

1.5 QUALITY ASSURANCE

A. The current MBR System design is based on MBR equipment supplied by KUBOTA Membrane USA Corporation. Other manufacturers will be considered and evaluated.

B. All the equipment and services specified under this Section shall be furnished by the Membrane Manufacturer as the system supplier, and shall be standard units of proven ability as a competent organization that is fully experienced, reputable and qualified in the manufacture of the equipment to be furnished. The equipment shall be designed, constructed and installed in accordance with the best practice and methods, and shall operate satisfactorily when installed.

C. To show evidence of being able to provide the quality of equipment and services described in this specification, the Membrane Manufacturer and System Supplier shall submit their quality system ISO certification. Certification shall remain in effect throughout the project startup.

D. All membranes furnished under this Section shall be new and unused and shall be the standard products of a Membrane Manufacturer having a successful record of manufacturing the flat plate membranes specified herein for a minimum of fifteen (15) years.

E. The MBR Manufacturer and System Supplier shall have a minimum of 15-year history of manufacturing the flat plate membranes.

F. Qualifications: The MBR System Supplier shall submit, as part of their proposal, the location, size, and start-up dates of five representative installations that meet the following criteria in order to be considered qualified:

i. Utilize the same type of membrane system proposed for this project.

ii. Have a plant or process train design capacity similar to the listed MMF.

iii. Use air scour and CIP strategies as recommended by the MBR Membrane Manufacturer's Operation and Maintenance Manual.

iv. Have been in operation for at least three years at time of bid.

v. Have operated within 35% of nominal rated capacity for a minimum of 12 months at time of bid.

1.5 WORK BY OTHERS

A. The following work and scope of supply is specifically excluded from the MBR Supplier scope:

i. Design and Engineering:

a. Architectural

b. Buried pipe, including soil requirements, thrust blocks, galvanic protection

c. Concrete basins

d. Wall penetrations outside of the MBR supplied metal tanks

e. Support of piping outside of MBR scope

f. Seismic design or calculations other than for seismic anchorage of the SMUs.

g. Sealing of calculations and drawings

ii. Structural:

a. Building(s) for housing MBR.

b. Concrete tankage for process and membrane zones.

c. Imbedded wall spools, pipe sleeves, pipe seals in concrete tank walls for the various process pipe connections/penetrations.

d. Covers or grating over process and membrane zones.

e. Equipment access platforms, walkways, stairs, etc. outside of MBR skid.

f. Anchor bolts for any equipment outside of MBR skid.

iii. Mechanical:

a. Hoist equipment above the membrane basin for installation and removal of the membrane subunits.

b. Installation of any kind, including equipment and piping within or outside of Scope of Supply.

c. Installation materials for instrumentation and automatic valves, including, but not limited to, air / sample line tubing, fittings, and mountings.

iv. Electrical:

a. Electrical wiring interconnections (including wiring, conduit and other appurtenances required to provide power connections as needed) from MBR's MCC to all field equipment outside of the MBR system

b. Network communications connection to the Plant SCADA and the MBR System SCADA systems.

v. Other:

a. Receiving, unloading and safe storage of equipment at site or a storage facility until ready for installation.

b. Equipment installation.

c. Instrumentation installation including continuity checks and assistance with related loop checkout.

d. Raw materials, chemicals and utilities during equipment testing. This includes potable water for system function testing and seed sludge per supplier requirements.

e. Laboratory services, operating and maintenance personnel during equipment checkout, startup and operations.

f. Onsite painting or touch-up painting of MBR, with the exception of painting required due to damage incurred prior to equipment being received onsite.

1.7 WARRANTY

A. MBR Manufacturer and System Supplier shall provide a guaranteed membrane replacement or additional purchase price as a cost per small subunit

B. MBR System Supplier shall warranty and replace the membranes under warranty for a period of 5 years. The warranty shall not be pro-rated.

C. All warrantee support, as defined in the warranty statement, shall be provided by the MBR System Supplier directly or through certified sub-contractors.

D. MBR System Supplier shall warrant small membrane subunits under the following terms:

i. MBR System Supplier shall replace any small membrane Subunits that fail before 5 years from the date of successful completion of the System Commissioning.

ii. Failure is defined as any of the following:

a. Inability to meet production capacity requirements as specified herein.

b. Inability to meet TSS and turbidity requirements as specified herein.

iii. The following are specifically excluded from warranted membrane failure conditions:

a. Exceeding TSS or Turbidity limits due to physical damage of the membranes and/or loss of piping integrity.

b. Loss of capacity due to failure to operate within design fluxes and permeability limits as defined in this Section.

c. Loss of capacity due to failure to perform required Maintenance cleans.

E. Supplier shall warranty all actuated valves with an expected number of duty actuations exceeding 2 actuations/minute for a minimum period of 1 year. The warranty shall not be prorated.

F. Supplier shall warranty all other equipment, not specifically mentioned above, against defects in workmanship and materials for a period of 1 year. The warranty period shall begin following completion of the System Commissioning as specified herein.

G. Supplier shall provide phone support for the MBR System for one year following successful completion of the System Commissioning.

PART 2 - PRODUCTS

2.1 MBR PRODUCT ENGINEERING AND DESIGN SERVICES

A. The MBR Manufacturer and System Supplier will provide the following design services related to the MBR product under a separate contract between the Owner and Supplier:

i. Biological Process Design Verification – The MBR Supplier shall support the Engineer in providing analysis and verification of the biological process design, based on the customer's influent mass loading, diurnal flow curves (if available), peak flow/loading numbers, and permit limits. The Supplier shall

verify basin volumes, recycle rates, aerations requirements, chemical dosing requirements, and waste solids projections. The supplier shall provide a written report summarizing the design results.

ii. Piping Hydraulic Analysis and Design – The MBR Supplier shall provide a detailed hydraulic analysis and mechanical design documentation of each process subsystem contained in the MBR System scope of supply. Piping design files shall be provided to the Engineer for integration into the design package. The subsystems included in the hydraulic analysis shall include:

a. Recycle pump systems

b. MBR air distributions systems

c. Permeate systems

d. WAS systems

iii. Equipment Sizing and Installation Details – The MBR Supplier shall verify duty points and turn-down, supply voltages, materials of construction, communications IO, equipment access and serviceability, area classifications, and pressure ratings for the MBR System's pumps, blowers, mixers, and valves. In addition to identifying manufacturers and specific part numbers for each component, installation details and CAD drawings shall be provided for integration into the Engineer's design package.

iv. Instrumentation Design – The MBR Supplier shall provide the Engineer with complete specification and documentation of all MBR System instrumentation. Installation details shall be provided in AutoCAD format for integration into the Engineer's design package.

v. Controls Design – The MBR Supplier shall supply MBR System Process and Instrumentation Diagrams utilizing the Supplier's standard symbols and tagging schemes,

2.2 SYSTEM PERFORMANCE REQUIREMENTS

A. The MBR System will be sized to hydraulically convey the flows shown in Table 2-1.

Table 2-1: Plant Hydraulic Loading Criteria

Parameter	Influent		Event Duration	Frequency	Total Duration
Average Annual Daily Flow (AAF)	0.090	MGD	344 days		
Peak Week Flow (PWF)	0.11	MGD	3 weeks	3/ year	21 days
Peak Daily Flow (PDF)	0.18	MGD	24 hours	8/ year	8 days
Peak Hour Flow (PHF)	0.18	MGD	4 hours	2/ year	2days

B. The MBR System shall be designed to accommodate the diurnal pattern as indicated per Engineer.

C. The MBR System shall be capable of treating raw wastewater at listed flows to the specified effluent criteria shown in Table 2-2

Table 2-2: Plant Pollutant Loading and Effluent Criteria

Parameter	Influent		Plant Loading @ Average Flow[1,2]		Effluent Limit/ Performance Requirement[7]
Maximum Month BOD_5	420	mg/l	315	lb/day	<30 mg/l
Maximum Month Daily Average TSS	350	mg/l	262	lb/day	<30 mg/l
Maximum Month Daily Average TN	12	mg/l	9	lb/day	<6 mg/l
Maximum Month Daily Average NH3-N	7	mg/l	5	lb/day	<3 mg/l
Turbidity	--	--	--	--	<0.2 NTU (avg.)
Design Minimum Temperature	22	Deg C	--	--	--

D. Process Redundancy

i. The MBR System shall be able to treat the AAF and MMF for the duration of chemical cleaning (minimum of 4 consecutive hours) with one Membrane Zone out of service.

E. System Configuration

i. The MBR System shall consist of one (1) process train, each consisting of

a. One anoxic basin with a minimum volume of 7,500 gallons.

b. One pre-aeration basin with a minimum volume of 19,928 gallons

c. Three MBR Zones with a minimum volume of 3,900 gallons/basin.

F. The sludge retention time (SRT) shall be a minimum of 15 days.

G. The proposed MBR System shall be designed in conformance to design guideline specified by SMU manufacturer.

H. The design MLSS in the MBR shall be 10,000 mg/l.

I. The allowable MLSS concentration in the Membrane Zones shall range between 8,000 mg/l and 15,000 mg/l.

J. The MBR basins shall be considered part of the biological process when calculating aerobic volume requirements.

K. Membrane CIP Procedures

i. Membrane subunits shall be cleaned in place using any of the four CIP methods in order to maintain production capacity and meet performance requirements specified herein. The allowable frequency of listed CIP methods shall be as follows:

a. Backwash frequency shall not exceed 1/hr

b. Maintenance Clean frequency shall be as necessary

c. Recovery Clean frequency shall not exceed 4/yr

L. For MBR Systems that require Recovery Cleaning as part of routine maintenance:

i. Tank liners shall be required for Membrane Zones to protect against corrosion or deterioration of wall materials.

ii. All fasteners, including nuts, bolts, screws, cables, washers and other appurtenances, associated with the SMU shall be manufactured from Type 316L stainless steel.

M. The MBR shall be designed to operate at or below a trans-membrane pressure (TMP) of 3 psig.

N. The existing MBR System utilizes self-priming centrifugal pumps to filter water. No additional components such as vacuum pumps and air separators shall be required for filtrations purposes.

O. Membrane Integrity Testing

i. Online membrane integrity testing shall be sufficient to detect a breach in a single membrane element or element connection.

P. Site Conditions

i. The elevation above sea level is 125 ft.

ii. Influent wastewater shall contain less than 50 mg/l fats, oils and grease (FOG).

iii. No substances shall be placed in the system in quantities which are not biodegradable or toxic to the biological system.

iv. The influent wastewater pH shall be between 6-8 SU.

v. Water hardness shall not exceed 300 mg/l as $CaCO_3$.

2.3 SUBSYSTEM SCOPE OF SUPPLY

MBR System Supplier shall furnish the Subsystem Components listed below in accordance with the requirements of this the project Specifications and Contract Documents.

A. Anoxic Basins

i. Mixers

ii. Basin high and low level switches

iii. Basin level sensor/transmitter

B. Oxic Basins

i. Basin high and low level switches

ii. Basin level sensor/transmitter

iii. Fine bubble diffusers

iv. Combination DO/temperature sensor/transmitter

v. NADH sensor/transmitter

C. Membrane Basins

i. Membrane SMUs

ii. In-basin interconnecting air and permeate piping less than three (3) inches.

iii. Pipe supports and support anchors for all Supplier-provided piping.

iv. Basin high and low level switches.

D. Permeate Collection System

i. MBR permeate pumps

ii. MBR permeate control valves

iii. MBR Permeate process instrumentation

iv. MBR Permeate turbidimeters

E. Cleaning Systems

i. Maintenance Clean system pumps, valves, instrumentation, and tanks.

ii. Backwash system pumps, valves, instrumentation, and tanks.

iii. Recovery Clean system pumps, valves, instrumentation, and tanks.

F. WAS Handling System

i. WAS pumps

ii. WAS control valves

iii. WAS instrumentation

G. Supplemental (Process) Aeration System

i. Process air blowers with one standby of equal or greater capacity

ii. Process air flow control valves

iii. Process air instrumentation

H. Membrane Zone (Scour) Aeration System

i. Scour air blowers with one standby of equal or greater capacity

ii. Scour air flow control valves

iii. Scour air instrumentation

I. Internal Recycle System

i. RAS pumps with standby of equal capacity

ii. RAS flow control valves

iii. RAS instrumentation

J. Controls

i. MBR control panel

ii. MBR Operator interface

iii. SCADA and PLC programming

2.4 GENERAL EQUIPMENT DESIGN AND FABRICATION REQUIREMENTS

The requirements listed below are in addition to those called out in the Specifications listed in Part 1 of this Specification.

A. Submersible Mixers

i. Submersible mixers shall be direct driven, close-coupled, guide-rail-mounted, non-clogging propeller type designed for mixing of raw or processed sewage. All components of the mixer shall be capable of continuous submerged operation. The mixer shall be sized to provide complete mixing.

ii. All major components of the submersible mixers shall be manufactured of 316 stainless steel. All bearings shall have a minimum B-10 rated bearing life of 100,000 hours.

iii. Mixers shall have integral motor thermal overload protection and seal failure (moisture) sensor.

iv. The mixers shall be provided with guide rails, guide brackets, and lifting cables.

B. Mixed Liquor Recirculation Pumps

i. Mixed liquor recirculation pumps shall be capable of passing a one-inch spherical solid.

ii. Major pump components shall be cast iron, ductile iron, or stainless steel.

iii. Pumps shall be provided inclusive of check valves, isolation valves, inlet and outlet pressure gauges, and expansion joints.

iv. Submersible pumps: Pumps shall have integral motor thermal overload protection and seal failure (moisture) sensor and be provided with guide rails, guide brackets, and lifting cables.

v. Dry-mount pumps: Pumps shall be horizontal, self-priming centrifugal type, designed specifically for handling municipal waste.

C. Fine Bubble Diffuser Systems

i. Fine bubble diffuser systems shall include in-basin aeration piping, pipe drops, submerged manifolds, laterals, diffusers, drain pipes, pipe supports, and purge system.

D. Submerged Membrane Unit (SMU)

i. The SMUs and supporting pipe work shall be designed for a cross-flow configuration by which the system will remove a portion of the water as the recycle flow circulates through the Membrane Zone.

ii. Depending on the membrane technology, a Membrane Zone can be classified as an MBR or a Membrane Tank. (see Part 1.2 of this Specification).

iii. Each Membrane Zone shall include one or more Membrane Banks.

iv. Each Membrane Bank shall consist of one or more Submerged Membrane Units (SMU). Each SMU shall be:

a. Prefabricated, preassembled and factory certified before shipment to the site.

b. Provided complete, with all necessary components, accessories and appurtenances required to make a complete and operable system.

c. Furnished with 304 SS housing, appurtenances and fasteners (including nuts, bolts, screws, cables, washers). If Recovery Cleaning is required as part of routine maintenance, 316L shall replace 304 SS as fabrication material.

d. Furnished with integral diffusers designed to promote efficient air scouring of Membrane Elements. The diffuser must be manufactured by membrane manufacturer.

e. Equipped with one or more SMU Subunits.

v. SMU Subunits contain multiple Membrane Elements. Membrane Elements shall:

a. Be assembled into a housing called a cassette or other.

b. Have a minimum replaceable membrane surface area of 108 ft^2 or less.

c. Be constructed such that the membranes are held vertically and bonded firmly at the top and/or bottom of the Subunit.

d. Be manufactured using materials suitable for use in submerged MBR applications and:

1) Have an average pore size of 0.2 micron or less.

2) By physically strong enough to withstand the operating conditions associated with continuous operation in an aerated tank of mixed liquor at concentrations of up to the value as specified by SMU manufacturer in its operation manual.

vi. The membrane module shall be approved by the Hawaii Department of Health (DOD). Submitters shall provide a copy of the DOH acceptance letter and test report.

vii. Seismic requirements (if applicable)

a. The MBR System Supplier shall provide documentation stating that the installed Units anchorage can meet the following seismic criteria:

1) Seismic Importance Factor: 1.5

2) Occupancy Category: III

3) Mapped Spectral Response Accelerations: SS = 200%

4) Site Class: D

5) Spectral Response Coefficients: Sds = 133%

6) Seismic Design Category: D

7) Component Anchorage Factors (Process Equipment): aP = 1.0, RP = 2.5]

E. Permeate Pumps

i. Permeate pumps shall be sized to handle peak instantaneous flow as defined in this Specification as well as rates associated with backwashing, maintenance cleaning, and aerator flushing.

ii. Permeate pumps shall be provided inclusive of check valves, isolation valves, inlet and outlet pressure gauges, and expansion joints.

iii. Permeate pumps shall be horizontal, self-priming centrifugal type or rotary lobe type, designed specifically for handling municipal waste.

F. Blowers

i. Blowers shall be provided complete with sound enclosure, inlet filters, discharge silencers, pressure relief valves, check valves, motors, temperature and pressure gauges, over-temperature sensor/switch, expansion joints, belts, and baseplates.

ii. Equalization blowers shall be sized to provide complete mixing at all side water depths.

iii. Process aeration blowers shall be sized to maintain a residual DO of 2.0 mg/L at MMF flow rates and loadings and a minimum of a 2:1 turndown. Process aeration system shall include a standby blower or equal or greater capacity than the duty blowers.

iv. MBR scour air blowers shall be sized such that sufficient scour air is provided to support MMF flows as described in this Specification without requiring additional maintenance cleans. The scour air system shall include a standby blower of equal or greater capacity than the duty blowers.

v. MBR scour air blowers shall accommodate a minimum surge or 1.5 psig under normal operating conditions.

G. Cleaning Systems

i. The Cleaning Systems shall include backwash, maintenance clean, and recovery clean systems as required by the Supplier's specific systems.

ii. Cleaning Systems shall be inclusive of all chemical feed tanks, chemical feed pumps, valves, instrumentation, controls, and all other ancillary equipment necessary for a complete cleaning operation.

iii. Supplier shall define building space to be allotted for all Cleaning Systems, including space for:

a. Chemical storage

b. Mix tanks

c. Cleaning system equipment

d. Safety equipment

e. Containment and neutralization of spent chemicals. Containment space shall include space necessary for separation of incompatible materials to meet International Building Codes and International Fire Codes.

H. Waste Activated Sludge (WAS) Pumps

i. WAS pumps shall be capable of passing a two-inch spherical solid.

ii. The pumps shall be sized to transfer the expected MMF waste sludge volumes in less than 3 hours.

iii. Major pump components shall be cast iron, ductile iron, or stainless steel.

iv. Pumps shall be provided inclusive of check valves, isolation valves, inlet and outlet pressure gauges, and expansions joints.

v. Submersible pumps: Pumps shall have integral motor thermal overload protection and seal failure (moisture) sensor and be provided with guide rails, guide brackets, and lifting cables.

vi. Dry-mount pumps: Pumps shall be horizontal, self-priming centrifugal type or rotary lobe type, designed specifically for handling municipal waste.

I. Vacuum Air Removal System (if required)

i. If applicable, each Membrane Unit shall include a vacuum system to prime the filtrate suction pump. The vacuum will be created by an 19ducator.

ii. Removal system shall be inclusive of a compressed air supply of 30 scfm at 90 psi. The 19ducator shall be capable of pulling a minimum of 5 scfm of air at -18 inHg or as required by the Membrane System Supplier.

J. Valve Actuators

i. In order to reduce operating noise levels to nearby residents, it is preferred that all valves be electric actuated valves. Valves must have On/Off Manual options, at the valve and in SCADA.

ii. If pneumatic valves are provided by the Supplier

a. Air supply requirements shall be defined by the MBR System Supplier

b. Supplier's scope shall include a duty and standby compressed air package. Each package compressor unit shall consist of skid mounted three lobe positive displacement blowers in noise suppression enclosures with as maximum of 85 decibels at 3-feet, intake filters, noise suppression discharge piping, and electrical motors and soft starters.

K. Instrumentation

i. Identification Tags: All field instruments shall have identification tags meeting the following requirements:

a. Tag number of instruments shall be established by the MBR System Supplier and approved by the Engineer

b. Tags shall be made of stainless steel, engraved with 3/16-inch letters, and attached using a stainless steel cable.

c. Instruments mounted on or within control panels and enclosures shall have the identification tag installed so that the engravings are easily visible to service personnel.

L. Piping

i. All MBR System air scour piping shall be Type 304 stainless steel.

ii. Permeate piping shall be schedule 80 PVC.

iii. Piping shall have welded, glued, flanged, or mechanical groove (Victaulic) connections.

iv. Pipe supports shall be 304 stainless steel Unistrut (or equivalent) systems or 304 stainless steel angle and structural shapes with stainless hardware, clamps, and guides

v. Transitions from MBR Supplier piping to Contractor's piping shall use ANSI 150 pound flanges unless otherwise noted or coordinated with the Contractor.

vi. Insulation, heat tracing and or painting shall be provided by the Contractor.

M. MBR SYSTEM CONTROLS

i. The MBR System controls shall be housed in a NEMA 12 panel. The control panel will house the MBR system PLC and valve Open/Close/Auto switches. The control panel PLC is to be sized to handle all I/O for components in the MBR System as indicated on the P&IDs.

ii. The MBR System shall include one Operator Interface containing graphical representations of all equipment and instrumentation and indication and trending of all process values. The Operator Interface shall also accept and

be able to monitor external inputs originating from the various other process at the facility such as headworks area, sludge processing and dewatering area and the effluent disinfection area.

iii. The Supplier shall be responsible for all programming for the MBR System PLCs, database creations and generation of all graphic display screens, alarm configurations and trends for the operator stations.

iv. MBR System controls shall be designed to allow for full manual (hand) operation in the event of PLC failures. Hand operations shall be manageable by two operators for a period of 72hr.

2.5 HAZARDOUS AREAS

A. Unless otherwise specified in the Contract Documents or Drawings, none of the MBR equipment or instrumentation is required to meet the requirements for hazardous area installations (Class 1, Division 1 or Division 2).

2.6 STEEL TANK

A. Carbon steel surfaces shall be blasted to a near white finish of 3 mil profile per SSPC-SP10 on the interior and exterior surfaces. The interior shall be coated to a 10-14 mil dry film thickness of Carboline Liner 341 or equal. The exterior shall be primed to a 3-6 mil dry film thickness of an epoxy primer such as Carboline Carboguard 893 or equal. The exterior shall have a top coat of 2-3 mil dry film thickness of a polyurethane paint such as Carboguard Carbothane 134 or equal. Blasting and coating application may vary depending on the coating manufacturer's recommendation. After coating, a visual inspection shall be performed to insure no runs, sags, blisters, voids, or other irregularities are present. Dry film thickness testing shall be performed in accordance with SSPC PA2, so that (1) spot consisting of (3) readings will be taken in (3) random 100 ft2 areas. Holiday detection shall be performed in accordance with NACE RP 0188-99 using a low voltage wet sponge.

2.7 SPARE PARTS AND SPECIAL TOOLS

A. The MBR Supplier shall provide the following spare parts:

i. One repair kit for sealing off damaged membrane sheets.

B. MBR Supplier shall furnish one set of special tools required for normal operation and maintenance of the MBR Units.

PART 3 – EXECUTION

3.1 MBR PRODUCT ENGINEERING AND DESIGN SERVICES

A. Supplier shall provide the MBR product engineering and design services called out in this specification in accordance with Table 3-1.

Table 3-1: Engineer and Design Services

Design Documents	Required for 60% Design	Required for 90% Design	Required for 100% Design
MBR Process drawings: piping/instrumentation drawings, for all equipment supplied by Supplier.	✓	✓	✓
MBR Mechanical drawings: dimensioned membrane arrangement plans, sections and details; dimensioned mechanical piping plans, sections, and details	✓	✓	✓
MBR electrical, instrumentation, and control drawings: power/wiring plans and details, one line diagrams, instrument plans, control plans	✓	✓	✓
Manufacturer cut sheet: all manufactured MBR equipment supplied by Supplier showing dimensions and physical and electrical requirements	✓	NA	NA
MBR Installation Instruction Manual for the MBR System supplied by Supplier	NA	NA	✓
MBR Equipment list: all Supplier supplied equipment	✓	✓	✓
MBR System control strategy		✓	✓
MBR Calculations: includes the design data (biological, flow, pressure, volumes, etc.) for the MBR System.	✓	NA	✓

B. The MBR System Supplier shall attend the following design coordination meetings at the Engineer's facility. Allow 1 full day per meeting.

i. Project kick-off meeting

ii. 60% design review meeting

iii. 90% design review meeting

3.2 PROJECT EXECUTION

A. Unless otherwise required in the Contract Documents, the MBR Supplier shall provide all submittal documentation as described in this Section no later than 10 weeks after receipt of purchase order and notice to proceed.

B. Unless otherwise required in the Contract Documents, the MBR Supplier shall deliver all components in their Scope of Supply, as described in this Section, no later than 20 weeks after receipt of written submittal approval.

3.3 CONTROL SYSTEM FACTORY ACCEPTANCE TEST

A. The MBR System Supplier shall coordinate and conduct a factory acceptance test (FAT) of the MBR control system during which:

   i. The PLC control logic and HMI operability shall be demonstrated by systematically forcing I/O to verify all controls functions and HMI screen representations defined in the system control narrative.

   ii. The MBR control panel shall be inspected for completeness, and workmanship.

B. The MBR System Supplier shall provide a minimum of 2 weeks' notice to the Owner and Engineer prior to the FAT. The Owner and Engineer may, at their option and the expense of others, choose to attend and witness the FAT.

C. Whether or not the Owner and/or Engineer attend the FAT, the MBR Supplier shall provide written documentation and certification of the completed FAT.

3.4 MATERIALS INSPECTION

A. The Contractor shall inspect delivered equipment upon arrival on site for completeness of scope delivery and to verify that all components have arrived undamaged. The Contractor is responsible for notifying the Supplier of deficiencies in quantities or conditions within 28 days from the ship date.

B. The Contractor shall provide all labor, materials, and equipment for unloading, de-crating, organizing, and compiling take-off of received MBR equipment, components, and instrumentation.

C. The Supplier shall make available, upon the request of the Contractor, personnel to assist in the inspection of the Supplier's equipment upon unload at the site. Supplier's personnel shall provide services in accordance with their standard daily rates.

3.5 MECHANICAL INSPECTION PRIOR TO COMMISSIONING.

A. The Contractor shall schedule with the MBR System Supplier to perform a Mechanical Inspection at least 2 weeks prior to the scheduled Commissioning of the System.

B. The MBR Suppler shall conduct a Mechanical Inspection of the MBR System to verify that the installation is complete and ready to begin Commissioning activities. The Supplier shall verify the following:

   i. Installation of all equipment per the Engineer's and Supplier's drawings and Supplier's IOM information.

   ii. Installation of all instrumentation per the Engineer's drawings and IOM information.

iii. Completeness of all piping installations.

iv. Completeness of all electrical installations.

v. Proper installation of the MBR SMU diffuser assemblies per the Submittal and IOM information.

vi. Completeness of all basins, including removal of all debris that may cause damage to the MBR SMU membranes.

vii. Review of all pipe integrity testing results.

C. Upon completion of the Mechanical Inspection, the Supplier shall provide written documentation of the inspection results.

i. If the MBR System is complete per the requirements of the Mechanical inspection, the MBR Supplier shall schedule the System Commissioning with the Contractor. The date for the System Commissioning is to be established within 2 weeks of the successful completion of the Mechanical Inspection.

ii. If the MBR System is not complete at the time of the Mechanical Inspection, the Supplier shall document system deficiencies to the Contractor, Engineer, and Owner. The Contractor will then complete all necessary work and provide documentation (including digital photographs) of the completed work. After all noted deficiencies are resolved to the satisfaction of the Engineer, Owner, and Supplier, the date for the System Commissioning is to be established within 2 weeks.

iii. If the Mechanical Inspection deficiencies are deemed as sufficiently important by the Supplier, Owner, or Engineer, the Contractor shall arrange for the Mechanical Inspection to be repeated at the Contractor's expense

3.6 SYSTEM COMMISSIONING

A. The MBR System Supplier shall coordinate with the Contractor, Engineer, and Owner for execution of the System Commissioning. In advance of System Commissioning the MBR System Supplier shall perform an onsite Mechanical Inspection of the facility and generate a punch-list of inconsistencies. The Contractor is required to resolve the punch-list items to the satisfaction of the System Supplier, prior to scheduling System Commissioning. The System Commissioning will consist of the following:

i. General inspection of systems (lubrication, rotation, calibration).

ii. Loop checking, instrumentation, and control system verification.

iii. Pipe loss testing.

iv. Clean water permeability testing.

v. Sludge re-seeding.

vi. Training

B. The Contractor shall provide materials and personnel in support of the System Commissioning to fill basins with clean water, transfer fluids, repair/remedy any and all electrical and mechanical issues, provide temporary tie-ins, temporary piping, transfer pumps, etc.

C. The Contractor shall coordinate with the Engineer and Owner to seed the MBR System with sludge at the conclusion of the clean water testing. The MBR Supplier is not responsible for supplying the seed sludge.

D. The System Commissioning shall begin at the Contractor's discretion, within the limits defined herein:

i. Successful completion of a pre-commissioning Mechanical Inspection is required.

ii. Start of Commissioning shall be no later than 60 days after completion of Mechanical Inspection.

E. The Owner shall operate the plant during the Commissioning Period; however, Supplier and Contractor shall be allowed to provide onsite assistance.

F. Supplier is responsible for monitoring operating conditions and performance during the Commissioning Period.

G. Supplier shall provide the Owner with a Plant Operations Manual at the end of the Commissioning Period. The manual shall include at a minimum:

i. As-built drawings

ii. Safety Manual

iii. HMI User's Manual

iv. As-built control schematics

v. Process variables and control narrative.

H. Supplier shall submit the Plant Operations Manual within 45 days following the end of the Commissioning Period.

I. Membrane permeate quality shall be evaluated to determine compliance of the MBR System with Performance Requirements. If the MBR System fails to comply with requirements of membrane permeate quality, Supplier shall provide the Owner and the Engineer a written plan of modifications to the system (such as repairing damaged membranes, replacing seals, complete replacement of system) to achieve compliance with the requirements. Upon implementation of modifications plan, the permeate quality tests shall re-commence in their entirety.

3.7 STRESS TESTING

A. A Stress Test shall be conducted following the System Commissioning to demonstrate the ability of the MBR System to meet specification requirements regarding Maximum Month Flow and Peak Daily Flow as described in Table 2-1.

B. The Supplier shall be responsible for performing the test and shall coordinate as necessary with plant staff.

C. A certified representative of the Supplier shall be onsite for the duration of testing unless otherwise agreed to in writing.

D. Testing shall not commence until the MBR System is operational and the biological process fully stabilized as indicated by the following:

   i. Mixed liquor suspended solids concentrations in the reactor shall be greater than 8,000 mg/L but less than 12,000 mg/L.

   ii. No excessive foaming indicative of upset conditions.

   iii. Filterability in excess of 10 Ml in 5 minutes.

E. One of three membranes shall be selected to undergo testing per Table 3-2. Conditions shall simulate rated MMF and PDF per Table 2-1 for the plant. During testing:

   i. Membrane cleaning, as required, shall be performed in accordance with Supplier recommendations and may occur during any phase of testing.

   ii. During testing instantaneous flux, trans-membrane pressure, permeability, temperature and airflow shall be recorded at one minute intervals.

Table 3-2: Testing Conditions

Testing	Duration (hr)	# MBR	# SMU	Air Scour Rate (SCFM)
Membrane Cleaning	2	1	1	0
MMF	48	1	1	400 – 560
PDF	8	1	1	400 – 560
Membrane Cleaning	2	1	1	0

   iii. The net (average) output during testing must be within 5% of target MMF and PDF to be considered successful.

   iv. Failure to pass the Stress Test shall result in an evaluation and retest of the system. A second failure shall require a remedy at the expense of the Supplier up to and including the installation of additional membrane equipment at no additional cost to the Owner.

3.8 TRAINING

A. The MBR System Supplier shall provide Training in the maintenance and operation of all systems included in the Supplier's control system.

B. Training shall be completed prior to the completion of the System Commissioning. All training shall be performed by the Supplier or a factory-certified representative of the supplier or component supplier. Training is to include:

i. Navigation of all HMI screens and menus.

ii. Review of automatic operations and controls.

iii. Changing process set points

iv. Overriding controls from the HMI

v. Manual operation of the system in the event of a power failure

vi. Maintenance cleaning

vii. Trouble shooting.

3.9 PROJECT SCHEDULE

A. The MBR System Supplier shall provide the Scope of Supply and associated services specified in this specification in accordance with the Table 3-1.

B. Firm dates for Deliverables as listed in Table 3-3 will be established by Engineer, Contractor, and Customer upon initiation of the project.

Table 3-3: Project Schedule

Deliverable	Due Date
Design Kick-off Meeting	To be completed within two weeks after notice to proceed.
Submittal of 60% Design Documents	Six weeks after completion of Design Kick-off Meeting
60% Design Review	Within two weeks of Submittal of 60% Design Documents
Submittal of 90% Design Documents	Six weeks after completion of Design Kick-off Meeting
90% Design Review	Within two weeks of Submittal of 90% Design Documents
100% Design Completion	Three weeks after completion of the 90% Design Review
Submittal Documentation	Eight weeks after notice to proceed
Installation Documentation (IOM)	Two weeks prior to Equipment Delivery at Site

Equipment Delivery at Site	18 weeks after receipt of Approved Submittals
Mechanical Inspection	Three weeks prior to System Commissioning
System Commissioning	To be scheduled upon successful completion of Mechanical Inspection
Training	Training to be provided at the conclusion of the System Commissioning
Plant Operations Manual (POM)	Four weeks after completion of System Commissioning

3.10 SUPPLIER SERVICES

A. In addition to the time necessary to complete the requirements established within this specification and elsewhere within the Contract Documents, the MBR System Supplier shall provide 18 person-days and 7 on-site visits in support of the Services shown in Tables 3-4 and 3-5.

Table 3-4: MBR Design Services

Item	Service	Estimated Person-Days	Estimated Trips	Notes
1	Design Meetings	6	3	Meetings to be at Engineer's facility
2	Weekly Status Conference Calls			For duration of the design scope

Table 3-5: MBR Project Execution Services

Item	Service	Estimated Person-Days	Estimated Trips	Notes
1	Project Kick-Off Meeting	4	1	One day meeting. Supplier to provide necessary personnel
2	Material Inspection	1	1	Supplier to verify completed shipment of material at unload
3	Mechanical Inspection	2	1	Per this Section
4	Commissioning	20	2	Inclusive of clean water testing and seeding support/startup
5	Training	2	1	Training during Commissioning
6	Technical Support	10	2	Onsite technical support

B. Time spent remedying equipment deficiencies/problems shall not count toward the listed durations and trips.

C. MBR System Supplier shall be given a minimum of two-week advance notice prior to the scheduling of any of the listed Services.

D. All service shall be provided by a factory representative or certified subcontractor.

E. Supplier shall provide telephone support for a minimum period of 5 years following commissioning during normal working hours.

F. Supplier shall provide a phone number for support during an event of an emergency.

END SECTION

SECTION 11332 – TANK MOUNTED CYLINDRICAL PERORATED PLATE SCREEN WITH INTERGRATED SCREENINGS WASHING

PART 1 – GENERAL

1.1 SUMMARY

A. General Requirements

i. Contractor shall furnish, install and place into satisfactory operating condition two (2) tank mounted rotating perforated plate screen for removing floating, particulate and fibrous material and for conveying, washing, dewatering and compacting the screenings before discharging the material into bags; as shown on the drawings and described in the specifications.

ii. It is the intent of these specifications that all equipment called for under this section shall be supplied by a single manufacturer.

1.2 REFERENCES

A. American Society for Testing and Materials (ASTM) Publications:

i. Section A322: Carbon and Alloy Steel Bar Specifications.

ii. Section A507-10: Standard Specification for Drawing Alloy Steel, Sheet and Strip, Hot-Rolled and Cold Rolled

B. Anti-Friction Bearing Manufacturers Association (AFBMA) Publications:

i. Standard 9-90 Load Ratings and Fatigue Life for Ball Bearings.

ii. Standard 11-90 Load Ratings and Fatigue Life for Roller Bearings.

C. American Institute of Steel Construction (AISC) Publications

D. American Welding Society (AWS) Publications

E. American Structures Painting Council (ASPC) Publications

1.3 SUBMITTALS

The following information shall be submitted to the Engineer. In accordance with Section 01300, copies of all materials required to establish compliance with this Section. Submittals shall include the following:

A. Product Data

B. Shop Drawings

C. Operations and maintenance manual: See Section 01300.

D. Detailed installation instructions, with clear step-by-step points on the correct mechanical and electrical installation procedures.

E. Equipment weights and lifting points.

F. Recommendations for short and long term storage.

G. A copy of the manufacturer's warranty

H. A copy of documents proving certification of the Manufacturer's Quality Management System according to ISO 9001 and Environmental Protection Management System according to ISO 14001.

I. Failure to include all drawings applicable to the equipment specified in this section will result in rejection of the entire submittal with no further review.

1.4 QUALITY ASSURANCE

A. To ensure quality, conformance, and reliability with regard to the manufacturing and production of the equipment, the manufacturer shall meet all requirements listed hereafter:

i. Manufacturer shall have a minimum of twenty (20) years experience producing equipment substantially similar to that required and shall be able to submit documentation of at least fifteen(15) independent installations using the same size or larger equipment as detailed in the below. Each installation must have been in satisfactory operation for at least five (5) years.

ii. The Contract Documents represent the minimum acceptable standards for the screening equipment for this project. All equipment shall conform fully in every respect to the requirements of the respective parts and sections of the drawings and specifications. All manufacturers shall modify, redesign, and furnish with special features or accessories, use materials or provide equipment with finishes as may be necessary to conform to the quality mandated by the technical and performance requirements of this specification.

iii. The entire unit shall be manufactured from AISI 304L stainless steel shapes. All components made of stainless steel shall be passivated by full submergence in a pickling bath for perfect surface finishing. No stainless steel components may be fabricated or assembled in a factory where carbon steel products are also fabricated, in order to prevent contamination by foreign debris which can cause corrosion of stainless steel.

iv. Electric motors, gear reducers, and other self-contained or enclosed components shall have an acrylic enamel finish.

v. All stainless steel components and structures shall be submersed in a chemical bath of nitric acid and hydrofluoric acid (pickling bath) to remove any residues that may be present on the material as a result of forming, manufacture, or handling. After removal from the pickling bath, the equipment must be washed with a high-pressure wash of cold water to remove any remaining surface debris and promote the formation of an oxidized passive layer which is critical to the long life of the stainless steel. No stainless steel components may be fabricated or assembled in a factory where carbon steel products are also fabricated, in order to prevent contamination by rust. Glass bead or sand blast or chemically treatment processes not based on nitric acid / hydrofluoric acid for stainless steel shall not be allowed.

vi. Fabrication shall be done in compliance with all applicable ASTM standards or equivalent international standards.

vii. All welding in the factory shall use shielded arc, inert gas, MIG or TIG method. Filler wire shall be added to all welds to provide for a cross section equal to or greater than the parent metal. Butt welds shall fully penetrate to the interior surface and gas shielding to interior and exterior of the joint shall be provided.

viii. Bolts, nuts and washers shall be selected from AISI 316L stainless steel such that they are anti-seizing.

ix. Manufacturer shall have established an ISO 9001 certified quality management system. Equipment suppliers not utilizing ISO 9001 facilities shall not be considered or approved for this project. Equipment supplier shall provide evidence of certification before being named as an acceptable manufacturer.

x. Manufacturer shall have established an ISO 14001 certified environmental protection management system designed to monitor and help minimize the harmful effects on the environment caused by its manufacturing processes. Equipment suppliers not utilizing ISO 14001 facilities shall not be considered or approved for this project. Equipment supplier shall provide evidence of certification before being named as an acceptable manufacturer.

xi. All welding is performed in accordance with American Welding Society (AWS) D1.1 Structural Welding Code, or equivalent.

xii. Manufacturer shall provide screen, tank, motors, gear reducers, controls, control panels, and lifting attachments as a complete integrated package to ensure proper coordination, compatibility, and operation of the system. The manufacturer shall test-run the fully assembled machine in his factory before shipment.

xiii. Manufacturer shall provide services by a factory-trained Service Engineer, specifically trained on the type of equipment specified. The Service Engineer requirements include, but are not limited to the following:

a. The Service Engineer shall be present during initial energizing of equipment to determine directional testing as described in Section 4.1 C (Installation).

b. The Service Engineer shall inspect and verify location of anchor bolts, placement, leveling, alignment and field erection of equipment, as well as control panel operation and electrical connections.

c. The Service Engineer shall provide classroom and/or field training on the operation and maintenance of the equipment to operator personnel. These instructions may include the use of slides, videos, literature, and/or oral presentations.

d. Manufacturer shall state field service rates for a Service Engineer to Owner and Contractor. In the event that the field service time required by this section should not be sufficient to properly place the equipment into operation, and the requirement for additional time is beyond the manufacturer's responsibility, additional time shall be purchased by Contractor to correct deficiencies in installation, equipment, or material without additional cost to Owner.

1.5 ENGINEER'S PRE-APPROVAL OF ALTERNATE EQUIPMENT

Manufacturer of alternate equipment shall submit a pre-approval package to the Engineer at least two (2) weeks prior to bid date. Alternate manufacturer shall submit the following information and supporting documentation:

A. A complete set of drawings, specifications, catalog cut-sheets, and detailed descriptive material. Drawings shall show all relevant details of the unit. This information shall identify all technical and performance requirements stipulated on the drawings and in the specification. If the proposed equipment does not meet these specifications, any deviation from the specification must be expressly noted. All deviations shall be listed on a single document.

B. Detailed installation drawings illustrating how the proposed screen fits in the stainless steel tank and where the proposed unit will be installed. The drawings shall include plan, elevation, and sectional views of the installation. Drawings shall include details of the seal between the screen and the tank, and details of the anchor bolt locations.

C. Hydraulic performance curves showing the relationship of head loss versus the full range of downstream liquid depths for the maximum clean water flow, the maximum

flow, the average flow, and 33% of the average flow as noted in paragraph 2.2.A. Curves based upon other manufacturer's data will not be accepted.

D. Motor characteristics and performance information. Vendor data shall be furnished to confirm the torque and thrust rating of the drive.

E. Complete reference list of all installations of same and similar equipment including contact names and phone numbers, showing at least 15 installations of the same type and size as specified.

F. Complete bill of materials for all equipment, showing dimensions and materials of construction of all components.

G. Certification by the manufacturer that all stainless steel equipment will be manufactured in a stainless steel only factory.

H. Certification that the entire equipment will be passivated by submersion in an acid bath.

I. A copy of documents proving certification of the Manufacturer's Quality Management System according to ISO 9001 and Environmental Protection Management System according to ISO 14001.

J. Details of the control and instrumentation system including wiring diagrams.

K. Information on equipment field erection requirements including total weight of assembled components and weight of each sub-assembly.

L. List of recommended spare parts.

M. A maintenance schedule showing the required maintenance, frequency of maintenance, lubricants and other items required at each regular preventative maintenance period, including all buy-out items.

PART 2 – PRODUCTS

2.1 MANUFACTURERS

A. Base Bid: Rotamat Perforated Plate Screen RPPS/1000/3 from Huber Technology, Inc.

B. Other pre-submitted and pre-approved Deductive Alternates.

C. Equipment of all manufacturers must be in accordance with these specifications and plans. Being named as a manufacturer does not eliminate their responsibility of providing equipment in compliance with the following specification section. Any

deviations without sufficient evidence proving equal or superior quality shall be rejected without further review or comment.

2.2 PERFORMANCE REQUIREMENTS

A. Screen Design Summary

i.	Number of screens	2 (two)
ii.	Nominal screen basket diameter	40" (1000mm)
iii.	Flow per screen, MGD	2.0
iv.	Max. Upstream water level, inches	26.2 (665mm)
v.	Max. Wet screenings capacity, cfph	70
vi.	Discharge height from base of tank, inch	See Drawings
vii.	Screen opening size, inches	1/8" (3 mm)
viii.	Location rating	Class 1, Divison 2

B. The fine screen shall be designed to handle the maximum flow with the maximum upstream and downstream liquid levels as specified above.

C. The nominal bar spacing specified above shall be the size of the circular openings. Screen designs which define the bar spacing as the distance between a fixed bar element and a moving adjacent bar element are not acceptable. Screens using rotating rakes, screw flight mounted brushes, wedge wire, or traveling filter media are also not acceptable.

D. The average perforation flow through velocity shall not exceed 3.3 ft/sec under any flow condition up to the maximum clean water flow specified above. The screen design shall minimize solids deposits in the tank.

E. The screen shall be capable of processing spherical objects with a diameter of 3-1/8”. Such objects shall be conveyed through the auger and shall be discharged with the screenings. The unit shall be capable of processing the screenings load specified above.

F. The perforated plate screen shall consist of a rotating cylindrical screen with an integral screw conveyor and screenings press. The fine screen shall use a single drive for screening, conveying, dewatering and compressing the screening material. The screen shall have an inclination of 35 degrees.

G. Operation of the rotating screen shall be automatically initiated at a preset high upstream liquid level. Screens which operate continuously or via timer only will not be acceptable. The rotating basket shall remove solids from the flow and deposit them into the concentric screw conveyor hopper using a spray bar and basket cleaning brush providing positive cleaning of the screen basket surface. The screenings shall be transported up the screw conveyor, through an integrated screening washing system, a compaction and dewatering zone and then shall be discharged into heavy duty screenings bags.

H. All open spaces of the screen shall be positively cleaned via a spraybar and cleaning brush system. Screens using a rotating rake or only screw flights with brushes will not be acceptable.

I. The screening equipment shall produce dewatered screenings capable of passing the EPA Paint Filter Test as described in method 9095 of EPA Publication SW-486.

J. To minimize odors and nuisance, the conveyance, dewatering and compaction zones shall be completely enclosed.

K. The spray wash system shall be enclosed such that spray water, aerosols or leakage do not contaminate the operating floor.

L. The control system shall be designed such that the cleaning characteristics of the screen and wash system can be changed via the programmable controller. Systems which do not offer this feature will not be acceptable for this project.

M. Materials

i. Unless otherwise specified in these specifications, the entire equipment shall be manufactured from AISI 316L austenitic stainless steel shapes (rods, angles, and channels), pipes, and sheets. All mechanical parts shall be designed to handle the forces that may be exerted on the unit during fabrication, shipping, erection, and proper operation according to the O&M manual.

ii. The entire equipment shall be manufactured in a stainless steel only factory to prevent contamination of the stainless steel with foreign contaminants.

iii. The equipment, after its fabrication, shall undergo a passivation (pickling) process to ensure maximum resistance to corrosion. All stainless steel components and structures shall be submersed in a chemical bath of nitric acid and hydrofluoric acid to remove any residues that may be present on the material as a result of forming, manufacture, or handling. After removal from the pickling bath, the equipment must be washed with a high-pressure wash of cold water to remove any remaining surface debris and promote the formation of an oxidized passive layer which is critical to the long life of the stainless steel. Submergence insures complete coverage. Spray on chemical

treatments and glass bead blasting are specifically not acceptable due to their inability to provide complete and uniform corrosion protection.

2.3 PRODUCT DESIGN SPECIFICATIONS

A. Screen

i. The perforated plate screen shall be designed and built to withstand static and hydraulic forces exerted by the liquid to the screen. All structural and functional parts shall be sized for the loads encountered during the screening, conveying and pressing operations. All submerged components and all components of the rotary screen in contact with the screened solids shall be of stainless steel construction.

ii. The screen basket shall be of a cylindrical shape. The perforated plate shall be around the entire basket circumference. The perforated plate spacing shall be as specified in 2.2.A. Bars or wedge wire will not be acceptable screen media.

iii. The basket diameter shall have a width as noted in 2.2.A.

iv. The upper end of the basket shall incorporate a support ring which shall be machined and supported by three (3) guide rollers made of polyamide. The guide rollers shall be attached to an upper support plate. This plate shall match a flange that is attached to the augur tube to ensure proper alignment of the basket. A brush shall be clamped to the upper support plate sealing the gap between the rotating screen basket and the fixed upper support plate.

v. The lower support ring of the basket shall be connected to the shaft of the auger and be driven by a common drive with the auger. The basket shall be connected with a solid support arm at the lower end of the basket which is bolted to the auger shaft.

vi. A seal plate shall be provided between the circular screen and the stainless steel tank. The seal plate shall be one-piece fabricated of stainless steel plate. The sealing plate shall be of sufficient height to prevent bypassing of flow around the screen at the maximum screen hydraulic capacity. A brush shall be clamped to the seal plate sealing the gap between the fixed seal plate and the rotating screen basket.

B. Cleaning Brushes

i. The screen basket shall rotate in one direction and pass through the topmost position were it is cleaned with a stainless steel high pressure spray bar and a stainless steel backed nylon brush with bristles that penetrate the depth of the perforated plate screen to ensure positive screenings removal. Brush bristles shall be high-strength nylon for superior life.

ii. The brush shall be designed to ensure cleaning of the spaces to the full depth of the perforated plate. The cleaning brush shall be mounted upon a stainless steel holding device which keeps the brush in constant contact with the basket and shall be adjustable to allow for brush wear.

iii. Another stainless steel backed nylon brush shall be attached to the rotating basket and positioned to make contact with the screening trough to sweep material caught on the edges of the trough.

C. Screening Conveyor and Screening Wash-Press

i. The auger tube shall have a diameter of 10.75 inches. The auger tube shall incorporate two (2) anti-rotation bars which shall be welded to the inside of the transport tube along the longitudinal axis. The screw shall not be in contact with the anti-rotation bars during normal operation, the screw shaft shall be supported by a Teflon® lined bronze slide bearing at the bottom and the gear box at the top.

ii. A support flange with a minimum thickness of 0.6 inches shall be welded to the screenings transport tube. The screen basket rollers and the screenings collection hopper shall be attached to this plate.

iii. A gear box support flange with a minimum thickness of 0.467 inches shall be welded to the upper end of the screenings transport tube for attachment of the drive assembly.

iv. A shafted auger screw that is entirely made of stainless steel shall be provided to transport and dewater the screened material. A shaft-less screw shall not be acceptable. Screw flights shall be of decreasing pitch approaching the compaction zone to provide a mechanical compressing action on the screenings material. The shaft shall have a diameter of 3.5 inches and shall have flights with a minimum thickness of 0.2 inches in the transport zone and 0.4 inches in the compaction zone. A replaceable flight section with an angle of about 120 degrees that is bolted to the shaft shall be provided at the bottom of the shaft where the wear is highest.

v. A compaction zone shall be an integral part of the screenings screw conveyor and transport tube design. The compaction zone shall be designed to form a screenings plug of material and to return water released from the screened material back to the wastewater tank/pump sump through circular holes that are machined into the screenings transport tube.

vi. The auger shaft shall be fitted with an upper and a lower solid stub. Stubs and screw shaft shall be accurately machined and shrink-fitted.

vii. The lower end of the screenings conveyor shall be supported by a sealed, self-lubricated, Teflon® lined bronze slide bearing. This bearing shall not take any thrust load from the screw conveyor. Lower ball or roller bearings, or bearings requiring lubrication, shall not be acceptable.

viii. The lower bearing shaft and arm shall be designed to minimize material wrapping around the shaft. A seal plate shall be furnished to mate between the stationary lower bearing support and the rotating arm to prevent material intrusion into the bearing seals.

ix. A compaction zone shall be provided as an integral part of the screw conveyor and tube. The compaction zone shall be designed to form a plug of screenings material and to return water released from the screened material back to the tank through 0.2 inch (5 mm) diameter perforations that are machined into the screenings transport tube in a square configuration.

x. The compaction zone shall be provided with split glass fiber reinforced housing, furnished with gaskets and bolts, and easily removable for access. Designs requiring removal of the drive assembly, discharge head, or screw conveyor to gain access to the compaction zone will not be acceptable. The housing shall be provided with a drain connection at its lowest point and a clamped flexible PVC hose for drain water whose other end is connected to a connection through the screen basket's upper support flange to return the drain water into the screen basket. The plastic housing shall also be provided with a 1 inch flush connection.

D. Drive

i. The basket mechanism and transport screw shall be driven by a shaft mounted geared motor. The geared motor shall have a minimum service factor of 1.0. The motor shall be provided with thermostats to provide thermal overload protection in addition to current overload protection.

ii. The gear reducer shall be bolted to a machined flange welded to the upper end of the transport tube.

iii. The gear reducer shall be driven by a 3 phase, 60 Hertz, 230/460 volt, Class 1, Division 1, Group D inverter-duty, totally-enclosed, fan-cooled motor which leads to a conduit box for outdoor operation. The motor rating shall be a minimum of 2.0hp.

E. Tank

i. The unit shall be supplied with a 316L stainless steel tank where perforated plate screen is integrated. The tank shall be provided with adequate stiffening to prevent distortion and with four height adjustable (+/- ¾ inch) legs that shall be anchored on the floor. Lifting lugs shall be provided for unloading the unit.

ii. The tank shall be provided with a hinged and gasketed cover. Cover shall be of an inset design to prevent leakage even in case of gasket failure. Opening and closing of the cover shall be supported by a pair of pressurized

pneumatic cylinders made of stainless steel. The cover shall be provided with a keyed turn-lock. Tank and cover shall be spray water tight.

iii. The tank shall have 14" inflow and 16" outflow connections equipped with Class 150 ANSI/ASME B16.5 rated flanges.

F. Spray Wash Systems

i. The screen shall be designed for a water supply of 31gpm and shall be provided with wash water distribution manifold with a single 1.25 inch point for connecting to the treatment plants final effluent water supply.

ii. An automatic spray wash system shall be provided for cleaning of the screen basket and shall be constructed of minimum 1 inch diameter piping and minimum 1 inch diameter flexible reinforced PVC hose. The spray wash systems shall be operated only while the screen basket is rotating. The spray wash system shall include a single 1 inch solenoid valve for flow control. Min pressure to the spray wash shall be 75 psi (5 bar).

iii. The screen shall incorporate a screenings washing system (IRGA) consisting of two washing points, one being in the rising tube of the screen and the second being in the screenings collection hopper. The screenings wash zone in the conveyor tube shall be provided with three nozzles located equidistant around the circumference to maximize the washing performance. A lower wash system shall be located above the open top of the hopper and shall utilize a spray bar with a minimum of 2 spray nozzles. The screenings washing system shall include dual 1 inch solenoid valves for flow control. The tank shall be provided with an automatic tank wash spray system including a nozzle with 360 degree spray range. All water access points shall be provided with solenoid valves, piping and flexible reinforced PVC hoses.

iv. The screen compaction zone shall be provided with a wash nozzle designed to flush the entire interior surface of compaction zone housing to ensure no debris buildup can occur. The compaction zone flushing system shall include a single 1 inch solenoid valve for flow control.

v. The solenoid valves shall be operated by the programmable logical controller. Individual manual operation of each solenoid shall also be possible from the control panel.

vi. The solenoid valves shall be minimum 1 inch diameter, brass body, 2-way, and designed for 110 VAC with an explosion-proof rating. Solenoid valves shall be normally closed and rated for up to 100 psig.

vii. A brass body Y-strainer shall be provided for the incoming plant water supply.

G. Bagger

i. A Paxxo Longofill continuous bagging system shall be provided to abate odors and to seal dewatered screenings to prevent any direct contact. The discharge bagging system shall provide a clean, odor-free means of collecting and containing the material discharged from the screenings equipment.

ii. The bagging system components shall be attached to the screenings discharge. An accordion-folded plastic Paxxo Longopac cassette bag shall be fitted to the end of the bagging system and will collect any discharged material. The end of the cassette bag will be tied in a knot. When the operator decides that the cassette bag is full, the cassette bag shall be cut and the exposed ends tied in knots.

iii. A Longofill stainless steel adapter flange and a Paxxo Longofill ABS plastic cassette bag holder shall be utilized to mount for the screenings discharge. The adapter flange shall be fitted to the discharge chute such that it is positioned as close to horizontal as possible. The plastic holder shall be attached to the stainless steel adapter and shall hold the continuous cassette bag.

iv. The adapter flange shall be stainless steel. The holder shall be of ABS plastic and shall consist of two parts, a tube and brim, which shall be held together by a stainless steel ring. The cassette bag shall be 230 ft (70m) long, non-porous, three-ply, co-extruded polyethylene with a min thickness of 1.8 mils and a dart drop of not less than 1.80 lbs (820 g).

H. Anchor Bolts

i. Equipment manufacturer shall furnish all anchor bolts of ample size and strength required to securely anchor each item of equipment. Anchor bolts, hex nuts, and washers shall be stainless steel. Anchor bolts shall be wedge or epoxy type.

ii. Anchor bolts shall be set by the Contractor. Equipment shall be placed on the foundations, leveled, shimmed, bolted down, and grouted with a non-shrinking grout.

I. Control Systems

i. All controls necessary for the fully automatic operation of the screen shall be provided, including a NEMA 4X stainless steel main control panel, and a NEMA 7 local control station.

ii. The electrical control system shall provide for automatic control of the screen via a high liquid level using a pressure transducer in combination with an adjustable timer.

iii. Main control panel shall be suitable for outdoor, wall-mounting. Enclosure shall be NEMA 4X Stainless Steel with continuous hinge and lockable door latch, and shall include the following:

a. Door-interlocked and fused disconnect

b. 600 VAC terminal block

c. VFD and Circuit Breaker Branch Circuit Protection for screen motor

d. Panel heater with thermostat (OPTION)

e. Control power transformer with 120 VAC transient voltage surge compressor (TVSC) and fused primary and secondary

f. Programmable logic controller (PLC), Allen Bradley Micrologix 1400

g. Operator Interface (OIU), Allen Bradley PanelView C400

h. Pilot lights for

    1) Control power on (white)

    2) Screen running (green)

    3) Screen high level (amber)

    4) Screen fault (red)

i. E-stop push button (red)

j. Screen reset push button (black)

k. Door mounted elapsed time meters for the following:

    1) Screen drive

l. Digital inputs for the following:

    1) Machine start water level

    2) Maximum water level

    3) One spare input

m. Remote dry contact outputs for the following:

    1) Screen running

    2) Screen fault

    3) Screen E-stop

4) Screen high level

5) Screen Hand-Off-Auto

Remote outputs will be monitored by the MBR supplied Operator Interface. Contractor shall confirm communication protocol between screen control panel and Operator Interface.

n. Flashing alarm light and alarm horn with silencer-reset button

o. Plastic Nameplates

iv. A local operator station shall be provided, and shall be suitable for pole-mounting. Enclosure shall be NEMA 7 cast Aluminum, and shall include the following:

a. Hand-Off-Auto selector switches for the following

1) Screen drive

b. Screen forward-off-reverse

1) Screen drive

c. Spray wash pushbuttons (push-to-test)

1) Spray bar

2) Screenings washing system (IRGA)

3) Compaction zone flushing

d. E-stop pushbutton (red)

J. Outdoor Weather Protection

i. The screenings transport tube and screening tank shall be furnished with thermal insulation of mineral wool, riveted stainless steel protective covers and a heat tracing system for outdoor weather protection which shall enclose the screenings transport tube, compaction and dewatering zone and all spray wash piping, ball valves and solenoid valves.

ii. The outdoor weather protection system shall include (Class I, Division 2, Group D) self- regulating heat tracing, adjustable thermostat, insulation and a stainless steel protective jacket.

iii. The heat tracing system shall be suitable for operation down to a minimum temperature of -25 deg C (-13 deg F) and shall be powered from the main control panel.

iv. Where the wash water supply and electrical wiring conduit penetrates the stainless steel cover bulkhead adapters shall be provided. Easy access shall be provided to every component requiring service or maintenance.

2.4 SPARE PARTS

A. The following Spare Parts shall be included and supplied together with the equipment:

i. 1 Complete bottom bearing assembly

ii. 1 set of basket cleaning brushes

iii. 1 Solenoid valve rebuild kit

iv. 5 Boxes with 230 ft endless bags each

v. 3 Plastic rollers

PART 3 – EXECUTION

3.1 DELIVERY, STORAGE, AND HANDLING OF EQUIPMENT

A. All equipment shall be shipped and delivered fully assembled, except where partial disassembly is required in order to conform to transportation regulations or for the protection of components.

B. The Contractor shall be responsible for unloading of the machinery and shall have equipment on- site available at the time of delivery permitting proper hoisting of the equipment.

3.2 FIELD PREPERATION AND PAINTING

A. Contractor shall touch-up all shipping damage to the paint and stainless steel as soon as the equipment arrives on the job site.

B. Contractor shall supply paint for field touch-up and field painting.

C. Contractor shall coat all stainless steel bolts and nut threads with a non-seizing compound prior to final assembly.

3.3 INSTALLATION, START-UP AND OPERATOR TRAINING

A. Contractor shall verify all dimensions in the field to ensure compliance of equipment dimensions with the drawings. Contractor shall notify Engineer of significant deviations.

B. Installation of the equipment shall be in strict accordance with the contract documents and the manufacturer's instructions and shop drawings. Manufacturer shall supply anchor bolts for the equipment. Contractors shall install the anchor bolts in accordance with the manufacturer's recommendations.

C. Manufacturer shall furnish the services of a factory-trained Service Engineer for two (2) trips including three (3) days to inspect the installation, carry-out the equipment start-up procedures, and provide training to the operators in how to effectively operate and maintain the equipment.

   i. Equipment shall not be energized, or "bumped" to check the electrical connection for motor rotation without the Service Engineer present.

   ii. The Service Engineer shall make all necessary adjustments and settings to the controls. In particular, the Service Engineer shall verify the measurement relay setting and the initial water level setting for the screen.

   iii. The Service Engineer shall demonstrate proper operation of the entire unit. The screen shall operate automatically based on the water level.

END SECTION

SECTION 11334 - SLUDGE DEWATERING SCREW PRESS

PART 1 – GENERAL

1.1 SUMMARY

A. General Requirements

i. Contractor shall furnish and install one (1) sludge dewatering screw press as indicated on the drawings. The screw press shall be manufactured from AISI 316L stainless steel shapes. Fabrication and assembly shall be in conformance with these specifications and drawings.

ii. Contractor shall furnished a complete dewatering system including screw press, drive motors, gear reducers, support legs, anchor bolts, controls, and all accessories and appurtenances specified or otherwise required for a complete and properly operating installation.

iii. Contractor shall coordinate all details of the equipment with other related parts of the work. He shall verify that all structures, piping, wiring, and equipment components are compatible. Contractor shall be responsible for all structural and other alterations required to accommodate equipment differing in dimensions or other characteristics from these specifications and drawings.

iv. Contractor shall install the equipment according to instructions and recommendations of the equipment manufacturer.

1.2 REFERENCES

A. American Society for Testing and Materials (ASTM) Publications:

i. Section A322: Carbon and Alloy Steel Bar Specifications.

ii. Section A507-10: Standard Specification for Drawing Alloy Steel, Sheet and Strip, Hot-Rolled and Cold Rolled

B. Anti-Friction Bearing Manufacturers Association (AFBMA) Publications:

i. Standard 9-90 Load Ratings and Fatigue Life for Ball Bearings.

ii. Standard 11-90 Load Ratings and Fatigue Life for Roller Bearings.

C. American Institute of Steel Construction (AISC) Publications

D. American Welding Society (AWS) Publications

E. American Structures Painting Council (ASPC) Publications

1.3 SUBMITTALS

The following information shall be submitted to the Owner or Owner's Representative. In accordance with Section 01300, copies of all materials required to establish compliance with this Section. Submittals shall include the following:

A. Product Data: Include the following:

   i. Descriptive literature, brochures, catalogs, cut-sheets and other detailed descriptive material of the equipment.

   ii. Motor characteristics and performance information.

   iii. Gear reducer data including service factor, efficiency, torque rating, and materials.

   iv. Parts list including a list of recommended spare parts.

B. Shop Drawings: Include the following:

   i. Manufacturer's installation drawings.

   ii. Wiring and schematic diagrams.

C. Operations and maintenance manual: See Section 01300.

D. Detailed installation instructions, with clear step-by-step points on the correct mechanical and electrical installation procedures.

E. Equipment weights and lifting points.

F. Recommendations for short and long term storage.

G. A copy of the manufacturer's warranty.

H. A copy of documents proving certification of the Manufacturer's Quality Management System according to ISO 9001 and Environmental Protection Management System according to ISO 14001.

I. Failure to include all drawings applicable to the equipment specified in this section will result in rejection of the entire submittal with no further review.

1.4 QUALITY ASSURANCE

A. To ensure quality, conformance, and reliability with regard to the manufacturing and production of the machinery described in this section, the equipment manufacturer shall meet the requirements listed in this section.

B. Manufacturer shall have established an ISO 9001 certified quality management system.

C. Manufacturer shall have established an ISO 14001 certified environmental protection management system.

D. All stainless steel components and structures shall be submersed in a chemical bath of nitric acid and hydrofluoric acid (pickling bath) to remove any residues that may be present on the material as a result of forming, manufacture, or handling. After removal from the pickling bath, the equipment must be washed with a high-pressure wash of cold water to remove any remaining surface debris and promote the formation of an oxidized passive layer which is critical to the long life of the stainless steel. No stainless steel components may be fabricated or assembled in a factory where carbon steel products are also fabricated, in order to prevent contamination by rust.

E. Screw Press shall be manufacturer's standard product and only be modified as necessary to comply with the drawings, specifications, and specified service conditions.

F. All welding is performed in accordance with American Welding Society (AWS) D1.1 Structural Welding Code, or equivalent.

G. Manufacturer shall provide screw press, motors, gear reducers, controls, control panels, and lifting attachments as a complete integrated package to ensure proper coordination, compatibility, and operation of the system.

H. Manufacturer shall provide services by a factory-trained service engineer, specifically trained on the type of equipment specified. Service engineer requirements include, but are not limited to the following:

   i. Service engineer shall be present during initial energizing of equipment to determine directional testing as described in Section 4.1 C (Installation).

   ii. Service engineer shall inspect and verify location of anchor bolts, placement, leveling, alignment and field erection of equipment, as well as control panel operation and electrical connections.

   iii. Service engineer shall provide classroom and/or field training on the operation and maintenance of the equipment to operator personnel.

   iv. Manufacturer shall state field service rates for a service engineer to owner and contractor. In the event that the field service time required by this section should not be sufficient to properly place the equipment into operation, additional time shall be purchased by contractor to correct deficiencies in installation, equipment, or material without additional cost to owner.

I. Contractor shall guarantee all equipment against faulty or inadequate design, improper assembly or installation, defective workmanship or materials, and breakage or other failure. Materials shall be suitable for service conditions.

J. All equipment shall be designed, fabricated, and assembled in accordance with recognized and acceptable engineering and shop practice. Individual parts shall be manufactured to standard sizes and thicknesses so that repair parts can be installed in the field. Like parts of duplicate units shall be interchangeable. Equipment shall not have been in service prior to delivery, except as required by testing.

K. Each major component of equipment shall have the manufacturer's name, address and product identification on a nameplate securely affixed to the equipment.

1.5 DELIVERY, STORAGE, AND HANDLING OF EQUIPMENT

A. Equipment shall be shipped and delivered fully assembled, except where partial disassembly is required in order to conform to transportation regulations or for the protection of components.

B. Contractor shall be responsible for unloading and shall have equipment on-site at the time of delivery permitting proper hoisting of the equipment.

1.6 PRE-SUBMITTAL OF ALTERNATE EQUIPMENT

Manufacturers of alternative equipment shall submit a pre-approval package to the Owner or Owner's Representative at least two (2) weeks prior to bid date. Alternative manufacturers shall submit the following information and supporting documentation:

A. A complete set of drawings, specifications, catalog cut-sheets, and detailed descriptive material. Drawings shall show all relevant details of the unit. This information shall identify all technical and performance requirements stipulated on the drawings and in the specification. If the proposed equipment does not meet these specifications, any deviation from the specification must be expressly noted. All deviations shall be listed on a single document.

B. Detailed installation drawings illustrating how the proposed screw press will be installed. The drawings shall include plan, elevation, and sectional views of the installation. Drawings shall include details of the injection ring, mixing valve, flocculation reactor, and details of the anchor bolt locations.

C. Motor characteristics and performance information. Vendor data shall be furnished to confirm the torque and thrust rating of the drive.

D. Complete reference list of all installations of same and similar equipment including contact names and phone numbers, showing at least 15 installations of the same type and size as specified.

E. Complete bill of materials for all equipment, showing dimensions and materials of construction of all components.

F. Certification by the manufacturer that all stainless steel equipment will be manufactured in a stainless steel only factory.

G. Certification that the entire equipment will be passivated by submersion in an acid bath as specified in chapter 2.3.

H. A copy of documents proving certification of the Manufacturer's Quality Management System according to ISO 9001 and Environmental Protection Management System according to ISO 14001.

I. Details of the control and instrumentation system including wiring diagrams.

J. Information on equipment field erection requirements including total weight of assembled components and weight of each sub-assembly.

K. List of recommended spare parts.

L. A maintenance schedule showing the required maintenance, frequency of maintenance, lubricants and other items required at each regular preventative maintenance period, including all buy-out items.

PART 2 – PRODUCTS

2.1 MANUFACTURERS

A. Sludge Dewatering System Model Q-Press 440.2 from Huber Technology, Inc. or approved equal

2.2 PERFORMANCE AND DESIGN REQUIREMENTS

A. Sludge to be dewatered shall be well-mixed and well blended having the following characteristics: [select one of the following]

i. Sludge: aerobically digested

a. Treatment Process: Secondary Clarifier
b. Solids concentration: 2 %
c. Volatile solids: 65 %
d. Sludge Retention Time, aerobic digester: +20 days
e. Other sludge characteristics:

B. Each dewatering screw press shall be capable of dewatering 18.2 Gallons per Minute (GPM) of the specified municipal wastewater sludge to a final solids content of 2%. The solids capture rate shall be a minimum of 95%.

C. The sludge dewatering plant consists of the following major parts:

i. Screw Press incl. support legs as described in section 2.3

ii. Control panel as described in section 2.6

D. All parts of the dewatering press shall be designed and appropriate for the service specified and indicated and for continuous operation.

E. Sufficient room for inspection, maintenance, repair and adjustment shall be provided. Contractor shall provide hoisting equipment to facilitate installation and maintenance work.

F. The physical layout shown on the drawings is based on the Huber Q-Press 440.2. If equipment by another manufacturer is to be supplied, contractor shall include in the bid all necessary modifications to the piping, electrical, structural, and mechanical layouts to accommodate the equipment proposed. Contractor shall pay Owner or Owner's Representative for all modifications of drawings.

G. All parts shall be designed and manufactured to handle the forces that may be exerted on the screw press during fabrication, shipping, erection, and proper operation according to the O&M manual.

H. All components shall be so arranged that they can be serviced from the operating floor.

I. All components shall be balanced so that jamming at any point will not result in structural failure, but will cause the drive motor to stall. All components, including the gear reducer, shall be designed to withstand, without damage or permanent distortion, the full stalling torque of the drive motor.

2.3 SLUDGE AND DEWATERING PRESS DESIGN SPECIFICATIONS

A. Materials

i. Sludge dewatering press shall be manufactured from AISI 316L stainless steel shapes (rods, angles, and channels), pipes, and sheets. In particular, wedge wire basket, screw, shaft, covers; support legs, fasteners and anchor bolts shall be made of this material.

ii. Wipers for helical screw flights shall be of wear resistant polyurethane (PU) material. Wipers must have a basket contact width of at least .315 in (8 mm).The wiper is held in place by stainless steel clamps and set screws which can be easily removed. The wiper shall have a self-contained a dampening mechanism to maintain constant contact with the basket while limiting wear. Wiper self-contained dampening mechanism shall compensate for up to 4mm of radial wiper wear. Brushes or wipers without this functionality shall not be accepted.

B. Design

i. The screw press shall be installed inclined (at 15º). Dewatering of the sludge takes place in a basket, which consists of three sections of wedge wire baskets. The overall basket length shall be 86 in (2,250 mm). The basket diameter shall be 17 in (440 mm).

ii. The screw press shall be completely enclosed to prevent odor emission. The whole dewatering section and basket area shall be easily accessible through an inspection lid, which is mounted via two hinges on the side of the machine.

iii. A screw shall be installed inside of the screen basket. The screw transports the sludge from the inlet to the discharge area at the end of the pressure zone. Its shaft diameter shall be conical towards the discharge section of the machine. The flights of the helical screw shall be provided with brushes to clean the wedge wire screen from the inside.

iv. The screw shall be shafted and shall be made of stainless steel. A shaft-less screw is not acceptable. A bearing shall support the discharge end of the screw shaft. Wear strips are not acceptable.

v. Each section of the wedge wire basket shall be split in half along the length of the basket to allow for easy separation of the basket into halves for servicing of the wiper. The basket shall be fastened together using bolt fasteners made of stainless steel. The screw press shall be provided with alignment pins for ease of basket alignment during reassembly. Designs which require the entire basket to be removed from the machine for servicing the wiper will not be accepted.

vi. A screw drive shall be provided at the sludge feed side of the press. The nominal motor power shall be 2.0 HP. The motor speed shall be controlled with a VFD. The drive unit shall be directly coupled to the screw shaft through a gearbox.

vii. The cleaning of the wedge wire screen from the outside shall be performed with a stationary spray bar washing system made of stainless steel piping and spray nozzles. The spray area shall run the entire length of the screen. One solenoid valve shall control the flow to the spray bar washing system. If a cleaning cycle is initiated, the screw press motor reverses and rotates the basket, until has completed a 360 degree rotation ensuring the entire surface area of the screen is cleaned. Contractor shall provide 1 in female threaded connection for the water supply piping to the manifold of the spray system.

viii. Spray water supply shall be designed for a minimum flow of 28 GPM (can be filtered non-potable water, allowed particle size 500 microns at maximum 200 ppm) at a minimum pressure of 70 PSI. Water pressure at each nozzle of the spray bar shall be a minimum of 70 PSIG. ED Average spray water

consumption shall not exceed 21 Gallons at 70 PSIG per wash cycle. The basket shall rotate with maximum speed as mentioned in section 2.05 below.

ix. A pneumatically actuated cone that serves for adjusting the pressure in the pressure zone shall be provided at the discharge end of the screening basket. The pressurized air supply shall be provided by the contractor.

x. Sludge cake shall be automatically discharged through a rectangular sludge discharge opening. The discharge height shall be minimum 37.5 in above floor level.

xi. Contractor shall provide a 4 in diameter drain line for the filtrate and connect it to the bottom drain connection of the screw press. The drain line shall also be provided with a 1.5 in flush connection with manual ball valve.

2.4 INTERNAL PIPING

A. Contractor shall provide and install a sludge feed pump. The sludge feed pump shall be of the progressive cavity type. The pump shall be controlled through a variable frequency controller (VFD) which is accepting a pacing signal from the screw press control panel, supplied by the manufacturer of the screw press.

B. Contractor shall provide sludge feed pipe from the sludge feed pump (with VFD) through a magnetic-inductive flow meter through a polymer-dosing ring, polymer mixing valve.

C. Polymer dosing ring and polymer mixing valve shall be supplied by the screw press manufacturer.

D. The size of the piping needs to take into account: maximum capacity, loading rate, minimum velocity in piping to avoid sedimentation and conditions which do not negatively impact the flocculation process.

2.5 DRIVE

A. The press screw shall be driven by a shaft mounted gearbox and motor assembly. The gear reducer shall be bolted to a machined flange welded to the lower end of the press.

B. The gear reducer shall be driven by a 1,680 rpm, 3-phase, 60 Hertz, 230/460 volt, continuous-duty motor with a conduit box suitable for outdoor operation. The motor power shall be 2.0 hp.

C. The output speed of the gear reducer shall be 1.3 rpm at frequency of 60 Hz.

D. Chain-drives, belt drives, hydraulic drives or a separate upper bearing for the transport screw will not be acceptable for this project.

2.6 AIR COMPRESSOR (to be provided by Contractor)

A. Provide one (1) portable air compressor as manufactured by Porter Cable, model C2002.

B. Air compressor shall use an UMC type motor rated for 0.8 Hp, 12,600 RPM, 115 V, 10 Amps.

C. Shall have a NPT outlet of 1/4 in.

D. Tank shall be 6 gallons.

2.7 CONTROLS AND INSTRUMENTATION

A. The entire control system shall be provided by the Manufacturer of the Screw Press.

B. The contractor shall provide wiring between all system components as required.

C. The contractor shall provide separate power supplies as followed:

i. 460 V, 60 Hz, 3 phase power supply to the main control panel

ii. 120 V, 60 Hz, single phase power supply to the polymer system.

iii. 120 V, 60 Hz, single phase power supply to the air compressor.

D. The dewatering system shall be full-automatic and shall include the following:

i. Main control panel for screw press

ii. Magnetic-inductive flow meter for thin sludge feed and polymer

iii. Automatic control for the pneumatic pressure cone

E. A 460-volt main control panel shall be provided in a NEMA 4X rated 316L stainless steel enclosure. The enclosure shall be suitable for pole mounting, shall have hinged covers which swing horizontally and shall be held closed with 3-Point Latch, and shall include the following:

i. Main power disconnect switch (pad-lockable)

ii. Control power transformer

iii. Surge arrester

iv. H-O-A control switches (screw drive including F/R selector switch, thin sludge pump, wash water solenoid valve)

v. 2.0 hp Allen-Bradley PowerFlex 525 VFD, with Ethernet, shall be provided to control the screw press main drive. (VFD for Sludge Feed Pump NOT included).

vi. Programmable logic controller (PLC) Allen Bradley CompactLogix with on-board Ethernet.

vii. Operator Interface (OIU), Allen Bradley PanelView 600 with color touch screen and Ethernet communication.

viii. Running time meter for screw press, and feed pump.

ix. Text messages displayed on touch screen:

a. Over-current indications

b. Spray bar washing system on

c. Polymer dosing station status

x. Operating and warning lights for the following:

a. Power on

b. Dewatering system in operation

c. Malfunction indication

d. Reset button

xi. Laminated plastic nametags shall be provided for the name of the control panel and all disconnects, switches, lights, and meters.

xii. Terminal connections for interfacing with remote systems, shall include the following:

a. Remote Polymer Injection System:

1) Inputs to Dewatering Control Panel:

A) Dry 120VAC Rated, 2 amp Minimum

I) Polymer System In Remote

II) Polymer System Running

III) Polymer System Common Fault

2) Outputs from Dewatering Control Panel:

A) Dry 120VAC Rated, 2 amp Minimum

I) Polymer System Call to Run

B) 4 – 20 mA Analog Output

I) Polymer Pacing Signal

b. Remote Sludge Feed Pump VFD:

1) Inputs to Dewatering Control Panel:

A) Dry 120VAC Rated, 2 amp Minimum

I) Sludge Pump In Remote

II) Sludge Pump Running

III) Sludge Pump Common Fault

IV) Sludge Flow

2) Outputs from Dewatering Control Panel:

A) Dry 120VAC Rated, 2 amp Minimum

I) Sludge Pump Call to Run

B) 4 – 20 mA Analog Output

I) Sludge Pump Pacing Signal

c. SCADA Status:

1) Inputs to Dewatering Control Panel:

A) Dry 120VAC Rated, 2 amp Minimum

I) Remote Dewatering System Start Command

2) Outputs from Dewatering Control Panel:

Remote outputs will be monitored by the MBR supplied Operator Interface. Contractor shall confirm communication protocol between press control panel and Operator Interface.

I) Press Running

II) Press Fault

III) Dewatering Mode

IV) System Disturbance

V) Polymer Run

VI) Polymer Fault

VII) Sludge Flow to Screw Press

VIII) Sludge pumps speed

IX) Sludge pumps Fault

X) Sludge pumps Run

Remote outputs will be monitored by the MBR supplied Operator Interface. Contractor shall confirm communication protocol between press control panel and Operator Interface.

PART 3 – EXECUTION

3.1 INSTALLATION, START-UP OPERATOR TRAINING

A. Contractor shall verify all dimensions in the field to ensure compliance of equipment dimensions with the drawings. Contractor shall notify Owner or owners Representative of significant deviations.

B. Installation of the equipment shall be in strict accordance with the contract documents and the manufacturer's instructions and shop drawings. Manufacturer shall supply anchor bolts for the equipment. Contractors shall install the anchor bolts in accordance with the manufacturer's recommendations.

C. After Installation touch-up paint shall be applied to all scratched, abraded and damaged shop painted surfaces. Coating type and color shall match shop painting. Contractor shall passivate all field welds.

D. Supplier shall furnish the services of a factory-trained service engineer for two (2) trips including a total of six (6) workdays to inspect the installation, observe start up, and provide operator training.

i. Equipment shall not be energized, or “bumped” to check the electrical connection for motor rotation without the service engineer present.

ii. The service engineer shall make all necessary adjustments and settings to the controls.

iii. The service engineer shall demonstrate proper and sequential operation of the dewatering system. The dewatering system shall be able to operate fully automatically.

3.2 WARRANTY

A. The manufacturer will warrant against any defects in material or workmanship to the screw press and framework. This warranty will commence upon delivery of the products and will expire on the earlier to occur of one (1) year from initial operation of the product or 18 months from delivery thereof (the “Warranty Period”).

END SECTION

SECTION 11346 - ULTRAVIOLET DISINFECTION EQUIPMENT

PART 1 – GENERAL

1.1 SUMMARY

A. General Requirements

i. Furnish all labor, materials, equipment and appurtenances required to provide a pressurized closed-vessel ultraviolet (UV) disinfection system complete with high-intensity low-pressure amalgam lamps, automatic wiping and constant output electronic ballasts. The UV system shall be complete and operational with all control equipment and accessories specified herein and as shown on the contract drawings.

ii. The UV disinfection system shall be purchased from Trojan Technologies, the Base Bid Manufacturer, by the Contractor. The system shall be installed by the Contractor and tested and commissioned by Trojan Technologies, as specified in this section.

1.2 QUALITY ASSURANCE

A. Pre-qualification Requirements: All UV Manufacturers shall be required to pre-qualify, unless the manufacturer is the Base Bid Manufacturer, and must submit the following within fifteen (15) days prior to bid to be considered for approval:

i. The Manufacturer shall be regularly engaged in the manufacture of UV disinfection systems with a proven track record of at least one hundred (100) installations, each with a flow rate of at least 1.0 USMGD (158 m^3/hr). The manufacturer shall provide experience documentation for UV disinfection systems in municipal wastewater applications.

ii. The UV Manufacturer shall submit a Bioassay Validation Report for the proposed reactor. The bioassay testing and results shall have been validated by a qualified independent third party in full compliance with the NWRI Ultraviolet Disinfection Guidelines for Drinking Water and Water Reuse (May 2003) The bioassay must demonstrate that the proposed UV system design and number of lamps will deliver the specified dose.

iii. Bioassay testing shall evaluate reactor performance over the wide range of flow rates, UV Transmittance (UVT) (measured at 254 nm, 1 cm path length) and MS2 Reduction Equivalent Dose (RED). The bioassay testing must encompass the range of design and operating conditions described herein. Extrapolations of flow rates, UV Transmittance values, or UV doses outside the range actually tested, shall not be permitted.

iv. Validation testing shall verify that the headloss generated by the proposed reactor is less than or equal to the specified limits.

v. If medium-pressure lamp technology is proposed, a detailed mechanical and chemical cleaning strategy must be provided by the Manufacturer to prevent algae growth in the reactors.

vi. The UV manufacturer must demonstrate that the electrical consumption based on Reduction Equivalent (bioassay) Dose, at peak flow and specified water quality (UV transmission), does not exceed the amount specified in kW per Section 1.3.A.4. If the maximum power consumption exceeds the specified amount, the Contractor shall pay the Owner a present worth cost based on a 25-year life and a 6% interest rate. The present worth cost shall be the difference between the average cost of operation and the cost to operate at the specified power consumption. The cost of power shall be assumed to be $0.15/kWh. The credit shall be applied through a deductive change order.

vii. Pre-qualification submittals from the UV manufacturer shall include a complete and detailed proposal of equipment offered, including the number of lamps proposed and a detailed description of any exceptions taken to the specification.

viii. Documentation of the UV manufacturer's service capabilities including location and experience must be submitted.

1.3 SYSTEM DESCRIPTION

A. Design Criteria

i. The UV Manufacturer shall provide equipment to disinfect wastewater with the following characteristics:

Peak (Design) Flow:	125 gpm(US)
Average Flow:	62.6 gpm(US)
Design UVT (minimum):	65% (at 254 nm, 1 cm path length)
Total Suspended Solids:	10 mg/L, 30 Day Average of grab samples
Effluent Temperature Range:	33ºF to 85ºF (1ºC to 30ºC)
Max. Inlet Pressure:	150 psig (6.8 bar)

ii. Design Dose

a. The UV disinfection system shall be designed to deliver the Reduction Equivalent Dose (RED) specified in Section 1.3.C, Performance Requirements. To ensure the UV system can deliver the RED at the end of lamp life, with fouled sleeves, the RED shall incorporate an End of Lamp Life (EOLL) factor and Fouling Factor (FF). EOLL is the ratio of lamp output at end of the lamp life relative to new lamp output. FF is the

ratio of UV light transmission through the quartz sleeve at worst-case fouling conditions relative to a new quartz sleeve.

b. The RED shall be delivered under Peak (Design) Flow and Design UVT conditions specified in 1.3.A.1.

c. The RED must be verified by third party witnessed bioassay testing per Section 1.2.A.2 and Section 1.2.A.3.

iii. Hydraulics

a. Headloss through each UV train is 0.2 in - H2O under peak flow conditions.

iv. Electrical

a. The total power consumption of all duty UV reactors treating the design criteria specified in Section 1.3.A.1 at the RED (dose) specified in Section 1.3.C.2 must not exceed 4.5 kW.

b. If the maximum power consumption exceeds the specified amount, the Contractor shall pay the Owner a present worth cost based on a 25-year life and a 6% interest rate. The present worth cost shall be the difference between the average cost of operation and the cost to operate at the specified power consumption. The cost of power shall be assumed to be $0.15/kWh. The credit shall be applied through a deductive change order.

B. System Components

i. The UV system shall be comprised of the following components:

a. UV reactors:	2 (includes 1 redundant reactors)
b. Number of lamps per reactor:	18
c. Control Panel:	1 per reactor
d. UV Intensity Sensor:	1 per reactor
e. Wiping System:	Automatic Mechanical
f. Online UVT Analyser:	HACH UVAS

C. Performance Requirements

i. The UV Manufacturer shall provide a written guarantee that the equipment will continuously meet the specified performance requirements. The UV disinfection system shall be capable of producing an effluent conforming to

the following discharge permit: 2.2 Fecal Coliform/100 ml, based on a 7 day median. Grab samples will be taken in accordance with the *Microbiology Sampling Techniques found in Standard Methods for the Examination of Water and Wastewater, 19th Ed*.

ii. The UV system will be designed to deliver a minimum UV dose of 80 mJ/cm^2 at peak flow, in effluent with a UV Transmittance of 65% at end of lamp life (EOLL) after reductions for quartz sleeve fouling. The basis for evaluating the UV dose delivered by the UV system will be the independent third party bioassay, without exception. Bioassay validation methodology to follow protocols described in NWRI Ultraviolet Disinfection Guidelines for Drinking Water and Water Reuse (May 2003).

iii. The UV dose will be adjusted using an end of lamp life factor of 0.5 to compensate for lamp output reduction over the time period corresponding to the manufacturer's lamp warranty. The use of a higher lamp aging factor will be considered only upon review and approval of independent third party verified data that has been collected and analyzed in accordance with protocols described in *NWRI Ultraviolet Disinfection Guidelines for Drinking Water and Water Reuse* (May 2003).

iv. The UV dose will be adjusted using a quartz sleeve fouling factor to compensate for reduction of UV dose due to wastewater fouling during operation. If no quartz sleeve wiping system is included, a fouling factor of 0.5 shall be applied. If an automatic wiping system is included, a fouling factor of 0.8 shall be applied.

v. Independent validation for use of a higher lamp aging factor must be submitted to the Engineer for review a minimum of fifteen (15) days prior to bid.

vi. The UV system shall be able to continue providing disinfection while the automatic wiping system is in operation.

vii. System shall be designed to operate in an environment with ambient relative humidity of 5-90% and ambient air temperature of 32-104ºF (0-40ºC).

1.4 SUBMITTALS

A. Submit for review, engineering drawings showing the following:

i. Complete description in sufficient detail to permit comparison with the specifications.

ii. Dimensions and installation requirements.

iii. Descriptive information including catalogue cuts and manufacturer's specifications for all major components.

iv. Electrical schematics and layouts.

v. Independent bioassay validation letter and dosage calculations demonstrating compliance with the specified dose requirements.

vi. Disinfection performance guarantee and warranty letters.

1.5 GUARANTEE

A. Equipment

i. The equipment furnished under this section (excluding UV lamps) shall be free of defects in materials and workmanship, including damages that may be incurred during shipping for a period of one (1) year from start-up or 18 months after shipment, whichever occurs first.

B. UV Lamps

i. The UV lamps shall be warranted for 12,000 hours of operation (prorated after 9,000 hours) or 36 months after shipment, whichever occurs first.

C. Ballasts

i. The ballasts shall be warranted for 5 years, prorated after 1 year.

PART 2 – PRODUCTS

2.1 MANUFACTURER

A. The physical layout of the system shown on the contract drawings and the equipment specified herein are based solely upon the TrojanUVFit™, as manufactured by Trojan Technologies, London, Ontario, Canada.

B. To be acceptable, the UV system must operate in a pressurized closed vessel, use high-intensity low-pressure amalgam UV lamps, electronic ballasts with multiple power settings, and incorporate an automatic sleeve wiping system for lamp sleeves.

C. To be acceptable, the UV system shall have been independently validated in accordance with protocols described in *NWRI Ultraviolet Disinfection Guidelines for Drinking Water and Water Reuse* (May 2003). UV system sizing to be completely based on data collected during validation testing. No extrapolations outside tested range will be allowed.

D. To be acceptable, the UV system must fit within the given dimensions with no modifications.

E. A 24-hour, 7 days a week, phone support line must be provided by the Manufacturer for the life of the system.

F. If other equipment is proposed, the Contractor will demonstrate to the Engineer and the Owner that all requirements of materials, performance, and workmanship are met by the equipment proposed. Contractors proposing alternate manufacturers will be responsible for all costs associated with system evaluation and redesign including all electrical, mechanical and civil aspects of the installation.

2.2 DESIGN, CONSTRUCTION AND MATERIALS

A. UV Reactor

i. The UV reactor shall be manufactured from Type 316L stainless steel. The UV reactor shall be pickled, passivated and bead blasted for uniform external finish.

ii. The UV reactor shall be designed to handle a maximum operating pressure of 150 psig (10 bar), and shall be fully assembled and hydrostatically tested to 1.5 times the rated operating pressure, for at least 10 minutes without leakage, in the factory prior to shipment.

iii. Each UV reactor shall be supplied with 10" (250 mm) ANSI 150 lb flanged inlet/outlet connections.

iv. Each UV reactor chamber shall be a nominal 16 in. (0.41 m) in diameter.

v. In order to maximize hydraulic efficiency, the UV reactor is to be configured such that flow enters parallel to the lamps and exits through a flange located perpendicular to the UV lamps.

vi. Each UV reactor shall contain 18 high-intensity low-pressure amalgam UV lamps arranged horizontally and parallel to the direction of flow.

vii. Each lamp shall be enclosed in an individual quartz sleeve, one end of which shall be closed and the other sealed with compressed o-rings.

viii. Each UV reactor shall be provided with an end cap and safety switch. Power will be removed to the entire chamber when a reactor end cap is removed.

ix. The UV reactor shall be designed such that operating personnel at the plant can change lamps without draining the reactor.

x. The UV reactor shall be provided with access ports for easy access to the quartz sleeves.

xi. All access for internal reactor components, including lamps, sleeves and wiping system shall be from the same end. Designs requiring access from more than one side of the reactor are not permitted.

xii. Piping shall be designed so that the reactor remains full of water at all times during operation. Air trapped in the reactor will result in reactor shut down to avoid overheating.

xiii. The UV reactor shall be installed per the drawing.

xiv. Dry weight of the reactor shall not exceed 400 lbs (181.4 kg).

xv. Wet weight of the reactor shall not exceed 877 lbs (397.8 kg). Pipe supports, if necessary, shall be supplied by Others.

B. UV Lamps

i. Lamps will be high-intensity low-pressure amalgam. The lamps will be preheated to ensure long lamp life. Lamps that are not amalgam or that are based on driving a low-pressure lamp at amperages greater than 500 milliamps will not be allowed.

ii. The filament will use a clamped design and be significantly rugged to withstand shock and vibration.

iii. Electrical connections will be at one end of the lamp and have four pins, dielectrically tested for 2,500 volts. Lamps that do not have 4 pins will be considered instant-start. To be considered as an alternate, instant-start lamp systems will supply replacement spare lamps equal to 50% of the total number of lamps in the system.

iv. Lamps will be rated to produce zero levels of ozone.

v. Lamps shall be operated by constant output electronic ballasts.

vi. Lamps shall be monochromatic with minimum 90% of UVC output at wavelengths between 230 to 275nm.

C. Lamps End Seal and Lamp Holder

i. The open end of the UV lamp sleeve will be sealed by a compression o-ring.

ii. The o-ring compression is made by a sleeve nut that will require no special tools for installation or removal.

D. UV Lamp Quartz Sleeves

i. Type 214 clear fused circular tubing as manufactured by General Electric or equal.

ii. Lamp sleeves shall be domed at one end and be accessible through the reactor service entrance.

iii. The nominal wall thickness will be 1.5 mm.

E. UV Intensity Sensor

i. One (1) side-mounted sensor shall be provided per reactor chamber.

ii. The sensor will measure only the germicidal portion of the light emitted by a UV lamp. The detection system will be factory calibrated. Sensors that can be field calibrated will not be permitted.

F. Ballasts

i. Electronic ballasts shall be used to power UV lamps.

ii. Each ballast shall supply power to and control two (2) low-pressure amalgam lamps.

iii. The power factor shall not be less than 94% between 208 to 277Vrms at 100% power.

iv. The ballasts shall utilize a preheat circuit to ignite the lamps.

v. The ballasts will continue to operate without suffering damage when a short circuit is present across the ballast output terminals.

vi. The Total Harmonic Current Distortion shall be less than 5%.

G. Power Distribution Center (PDC)

i. Power distribution for each UV reactor shall be through the associated PDC housing all power supplies. Signal wiring interfacing the UV reactor with the PDC shall be as shown on the contract drawings.

ii. Each PDC shall be designed to operate with the following electrical supply: 240V, 1-phase, 2W+GND, 50/60 Hz, 4.9 kVA

iii. The PDC enclosure material of construction shall be 316 stainless steel.

iv. The PDC enclosure shall be Type 4X.

v. The PDC enclosure shall be UL or CSA approved.

vi. The PDC shall be installed within of the UV reactor (external running cable length).

vii. Each PDC shall be provided with a lockable disconnect handle that will shut down the reactor/cabinet power when the cabinet door is opened.

viii. PDC enclosure shall be wall-mounted.

ix. PDC enclosure dimensions shall not exceed 36 in. (0.9 m) x 48 in. (1.2 m) x 10 in. (0.3 m) (Width x Height x Depth). Weight shall not exceed 250 lbs (113 kg).

x. Controls

a. UV reactors shall be controlled by a microprocessor which continuously monitors and controls the UV reactor functions. Custom electronics, an input flow signal (supplied by others), and UV sensor(s), provide the microprocessor with the necessary indication of system parameters.

xi. Operator Interface

a. Complete control and monitoring of each TrojanUVFit™ reactor shall be accomplished through the operator interface located on the PDC.

b. The operator interface shall be a LED digital display.

c. The operator interface shall be menu driven, and shall display the following system information when prompted: reactor status, individual lamp status, lamp operating hours, RED (dose), UV intensity, power level, alarms, alarm history.

d. The most recent alarms shall be displayed on the operator interface when prompted, recorded by alarm type, date and time of occurrence, and date and time of correction.

xii. Remote Monitoring/Control

a. Remote outputs will be monitored by the MBR supplied Operator Interface. Contractor shall confirm communication protocol between UV control panel and Operator Interface.

b. Each reactor shall be able to operate in either Local or Remote (automatic) mode.

c. Each system shall be provided with the following hardwired I/O for operator interface:

- Discrete input for Reactor On/Off Control from remote location.

- Discrete output indicating Critical Alarm.
- Discrete output indicating Major Alarm.
- Discrete output indicating Minor Alarm.
- Discrete output indicating System Ready.
- Discrete ON/OFF status.
- 4-20ma Flow Signal Analog input.

H. Safety Features

i. Each UV reactor shall be equipped with a temperature switch to prevent the reactor from overheating. The temperature switch shall be wired to the PDC and, when activated, will shut the reactor down and initiate a critical alarm condition.

ii. Each UV reactor service entrance will be covered with a removable end cap to protect the lamps and electrical connections. For Operator safety, the protective cover will be equipped with a switch to disconnect power to the lamps when the cover is removed.

I. Wiping System

i. Each UV reactor shall be equipped with an automatic on-line sleeve wiping system.

ii. The wiping system shall be screw-driven.

iii. The wiping system shall wipe the lamp sleeves using an automatically initiated and controlled cleaning cycle. The wiping system shall be fully operational while still providing disinfection.

iv. Wiping cycle intervals shall be field adjustable via the operator interface. Manual wiping system control shall also be through the operator interface.

J. Temperature Switch

i. A temperature switch shall be fitted to each reactor for protection against heat build-up under no flow or drained chamber conditions.

ii. The temperature switch shall cause the UV system to shut down and alarm in event of higher than recommended water temperature (or air temperature if the lamps are operated in a dewatered situation).

K. Drain

i. Each reactor shall be furnished with a drain valve connection so the reactor can be dewatered for inspection or cleaning after the inlet and outlet valves are closed.

ii. The drainpipe (supplied by Others) and valve shall be of type 316 stainless steel construction.

L. On-Line UV Transmission Monitor

i. An on-line UVT monitor will be provided to automatically and continuously track the UV transmission of the effluent at the 254 nm wavelength. UVT monitor will be UVAS as manufactured by Hach Company.

ii. The UVT monitor will measure transmittances from 25 to 100%.

iii. A shielded twisted pair cable to be provided by the Contractor for connecting the UVT monitor (4-20 mA signal) to the System Control Center. The SCC will modulate the lamp intensity in response to the effluent UV Transmission.

iv. Power feed of 100 – 230 VAC ± 10%, 50/60 Hz, 1 phase, 2 wire (plus ground), 50 VA required to the sensor located at the UV channel as shown on the Drawings.

M. Spare Parts

The following spare parts and safety equipment shall be supplied for each reactor:

i. 4 UV lamps

ii. 4 Sleeves

iii. 2 Ballasts

iv. Set of seals and o-rings

v. Set of replacement wiper seals

vi. 1 Face Shield, able to block UV light wavelengths between 200 and 400nm

PART 3 – EXECUTION

3.1 INSTALLATION

A. In accordance with the contract drawings, manufacturer's engineering drawings and instructions.

3.2 MANUFACTURERS SERVICES

A. Installation Supervision: As required by phone or fax.

B. Start-up and Operator training: 2-3 full days on site, per reactor.

C. Service scheduling: As required during the warranty period.

END SECTION

SECTION 11375 – JET AERATOR

PART 1 – GENERAL

1.1 SUMMARY

Furnish all labor, materials, equipment and incidentals to install the jet aerator in the equalization tank.

1.2 RELATED WORK

The requirements of SECTION 11000, GENERAL EQUIPMENT REQUIREMENTS apply to this section.

1.3 SUBMITTALS

A. Catalog literature and technical manuals for the jet aerator.

B. Shop drawings showing general dimensions and construction details of the equipment.

C. Performance curves and motor information.

D. A list of spare parts and optional equipment.

E. Operation and maintenance manual.

F. Control drawings and data.

G. Manufacturer's warranty.

1.4 QUALITY ASSURANCE

A. Manufacturer's Representative

Provide four (4) hours of field training, by a factory-approved technician, in the maintenance, operation and repair of the aeration.

B. Complete Units

A single manufacturer having overall system responsibility to ensure coordination and compatibility of all major components of the system shall furnish the jet aerator and mixer. Overall system responsibility shall include start-up, training, calibration, and ultimately successful operation of the equipment in conformance with the performance criteria of the specification.

PART 2 – PRODUCTS

2.1 GENERAL

The jet aerator shall be designed for aeration/oxygenation and mixing in wastewater treatment. One (1) jet aerator shall be provided for the equalization tank. The jet aerator shall be manufactured by ITT Flygt, or approved equal.

A. Jet Aerator Model JA 117-P6-3127-438

2.2 EQUIPMENT PERFORMANCE

The equipment provided under this section shall conform to the following:

Jet Aerator	
Max. Liquid Depth	14.0 ft
Water Flow	1.6 mgd
Air Flow	1.0 mgd
SOTR	17.6 lb O2/hr
Speed	1750 rpm
Thrust	236 N

Motor
Voltage/Phase 460/3
Horsepower 10

2.3 MATERIALS OF CONSTRUCTION

A. Pump

i. The pump shall be an ITT Flygt Model N 3127, or approved equal. The Pump shall have a high strength, cast iron ASTM A48 No. 35B body. Static seals with leakproof Nitrile rubber O-rings in precision machined grooves, with controlled compression. The volute bottom shall provide sealing between the volute and the impeller.

ii. The motor shall be air filled, NEMA design B with class H insulation. The motor shall be designed for continuous duty, and shall be capable of up to 15 evenly spaced starts per hour.

iii. The shaft shall be stainless steel. The shaft seals shall be independent double face seals running in environmentally friendly, FDA approved lubricant. The upper and lower seals shall be tungsten carbide/tungsten carbide.

iv. The upper bearings shall be a single row ball bearing and the lower bearings shall be a double row ball bearing.

v. The power cable shall be sized according to the NEC and ICEA standards and shall be of sufficient length to reach the terminus point indicated on the drawings without the need of any splices. The impeller shall be semi-open multi-vane, back swept, non-clog design with self cleaning vane leading edges. The impeller shall be of cast iron ASTM A48 Class 35B and with leading edges hardened to HRC 45.

B. Aerator Assembly

The air inlet and delivery pipes shall be Type 304 stainless steel. The ejector body shall be cast iron. The orifice plate shall be HDPE and the nozzle shall be Type 304 stainless steel.

2.3 CONTROL PANEL

The controls shall be located at the equalization tank and in a stainless steel NEMA 4X enclosure. The controls shall include a mini-CAS (Control and Status) that can monitor the temperature of the stator thermocontacts and water leakage.

Each jet aerator shall be provided with a local HOA (Hand-Off-Auto) disconnect switch. The enclosure for the local HOA disconnect switch shall be suitable for Class I, Division 2, Group D electrical environments.

PART 3 – EXECUTION

3.1 INSTALLATION

The jet aerator shall be installed in accordance with approved procedures submitted with the Shop Drawings and as shown, unless otherwise approved.

3.2 TESTING

After completion of installation, the jet aerator and mixer shall be field tested to demonstrate compliance with the performance requirements as specified.

END SECTION

SECTION 15444 – PACKAGED BOOSTER PUMPS

Part I – GENERAL

1.1 WORK INCLUDED

Skid mounted variable speed packaged pumping system for reclaimed water

1.2 REFERENCE STANDARDS

The work in this section is subject to the requirements of applicable portions of the following standards:

A. Hydraulic Institute
B. ANSI – American National Standards Institute
C. ASTM – American Society for Testing and Materials
D. IEEE – Institute of Electrical and Electronics Engineers
E. NEMA – National Electrical Manufacturers Association
F. NEC – National Electrical Code
G. ISO – International Standards Organization
H. UL – Underwriters Laboratories, Inc.

1.1 SHOP DRAWINGS AND SAMPLES

A. The following shall be submitted in compliance with Section 01300:

i. Certified performance curves and rated capabilities, furnished specialties, and accessories for the packaged booster pump system

ii. Show layout and connections for packaged booster pumps. Include setting drawings with templates, directions for installation of foundation and anchor bolts, and other anchorages.

iii. Maintenance and operation manuals.

1.2 SERVICES OF MANUFACTURER

A. Inspection, Startup, and Field Adjustment: An authorized representative of the manufacturer shall visit the site and witness the following for not less than 1 day.

B. Installation of the equipment including alignment and leveling.

i. Inspection, checking, and adjusting the equipment.

ii. Startup and field-testing to verify performance.

iii. Performing field adjustments to ensure that the equipment installation and operation comply with the Specifications.

C. Instruction of Owner's Personnel: The authorized service representative shall also instruct the Owner’s personnel in the operation and maintenance of the equipment, including step-by-step troubleshooting procedures with necessary test equipment for not less than 1 day.

Part 2 – PRODUCTS

2.1 VARIABLE SPEED PACKAGED PUMPING SYSTEM

A. Furnish and install a pre-fabricated and tested variable speed packaged pumping system to maintain constant water delivery pressure.

B. The packaged pump system shall be a standard product of a single pump manufacturer. The entire pump system including pumps and pump logic controller, shall be designed, built, and tested by the same manufacturer.

C. The complete packaged water booster pump system shall be certified and listed by UL (Category QCZJ – Packaged Pumping Systems) for conformance to U.S. Standards.

D. The packaged pump system shall be ASHRAE 90.1 – 2010 compliant without the need of a remote mounted sensor. The control logic used to simulate a remote mounted sensor shall be proportional pressure control with squared or linear adaptation. An actual flow rate or calculated flow rate based on performance curves (5th order polynomial) loaded into the controller; shall be used to adjust setpoint pressure in proportional pressure control.

E. The packaged pump system is a Grundfos Booster paQ Model MPC-E 3CRE10-6 or approved equal.

2.2 PUMPS

A. Skid mounted with three multistage vertical pumps, including piping, valves, sensor, controls and adjustable-speed drive units for variable-speed operation with an integral small hydro-accumulator tank to accommodate periods of low demand.

Minimum Pressure Rating	- 80 psig
Pump Arrangement	- Triplex with three equal-sized pumps
Pumps	- Vertical, multi-stage pumps
Operation	- 24 hours/day
Flow	- 140 gpm
Motor	- 460 volts, 3 phase, 60 Hertz, VFD motors

B. The pumps shall be of the in-line vertical multi-stage design.

C. The head-capacity curve shall have a steady rise in head from maximum to minimum flow within the preferred operating region. The shut-off head shall be a minimum of 20% higher than the head at the best efficiency point.

D. In-line Vertical Multi-Stage Pumps (shall have the following features:

1. The pump impellers shall be secured directly to the smooth pump shaft by means of a split cone and nut design.

2. The suction/discharge base shall have ANSI Class 125 or Class 250 flange connections in a slip ring (rotating flange) design as indicated in the drawings or pump schedule.

3. Pump Construction.

a. Suction/discharge base, pump head	Ductile Iron (ASTM 80-55-06)
b. Shaft couplings, flange rings:	Ductile Iron (ASTM 80-55-06)
b. Shaft	431 Stainless Steel
c. Motor Stool	Cast Iron (ASTM Class 30)
d. Impellers, diffuser chambers, outer sleeve:	304 Stainless Steel
e. Impeller wear rings:	304 Stainless Steel
f. Intermediate Bearing Journals:	Silicon Carbide
g. Intermediate Chamber Bearings:	Leadless Tin Bronze
h. Chamber Bushings:	Graphite Filled PTFE
I. O-rings:	EPDM

4. The shaft seal shall be a balanced o-ring cartridge type with the following features:

a. Collar, Drivers, Spring:	316 Stainless Steel
b. Shaft Sleeve, Gland Plate:	316 Stainless Steel
c. Stationary Ring:	Silicon Carbide
d. Rotating Ring:	Silicon Carbide
e. O-rings:	EPDM

The Silicon Carbide shall be imbedded with graphite.

5. Shaft seal replacement shall be possible without removal of any pump components other than the coupling guard, motor couplings, motor and seal cover. The entire cartridge shaft seal shall be removable as a one-piece component. Pumps with motors equal to or larger than 15 hp (fifteen horsepower) shall have adequate space within the motor stool so that shaft seal replacement is possible without motor removal.

2.3 INTEGRATED VARIABLE FREQUENCY DRIVE MOTORS

- Each motor shall be of the Integrated Variable Frequency Drive design consisting of a permanent magnet synchronous motor (ECM) and a Variable Frequency Drive (VFD) built and tested as one unit by the same manufacturer.

- The VFD shall be of the PWM (Pulse Width Modulation) design using IGBT (Insulated Gate Bipolar Transistor) technology.

- The VFD shall convert incoming fixed frequency three-phase AC power into a variable frequency and voltage for controlling the speed of motor. The motor current shall closely approximate a sine wave. Motor voltage shall be varied with frequency to maintain desired motor current suitable for centrifugal pump control and to eliminate the need for motor de-rating.

- The VFD shall automatically reduce the switching frequency and/or the output voltage and frequency to the motor during periods of sustained ambient temperatures that are higher than the normal operating range. The switching frequency shall be reduced before motor speed is reduced.

- An integral RFI filter shall be standard in the VFD.

- The VFD shall have a minimum of two skip frequency bands which can be field adjustable.

- The VFD shall have internal solid-state overload protection designed to trip within the range of 105-110% of rated current.

- The integrated VFD motor shall include protection against input transients, phase imbalance, loss of AC line phase, over-voltage, under-voltage, VFD over-temperature, and motor over-temperature. Three-phase integrated VFD motors shall be capable of providing full output voltage and frequency with a voltage imbalance of up to 10%.

- The integrated VFD motor shall have, as a minimum, the following input/output capabilities:

    1. Speed Reference Signal: 0-10 VDC, 4-20mA
    2. Digital remote on/off
    3. Fault Signal Relay (NC or NO)
    4. Fieldbus communication port (RS485)

- The motor shall be Totally Enclosed Fan Cooled (TEFC) with a standard NEMA C-Face, Class F insulation with a temperature rise no higher than Class B.

- The cooling design of the motor and VFD shall be such that a Class B motor temperature rise is not exceeded at full rated load and speed at a minimum switching frequency of 9.0 kHz.

- The overall efficiency of the VFD and motor must exceed NEMA Premium Efficiency.

- Motor drive end bearings shall be adequately sized so that the minimum L10 bearing life is 20,000 hours at the minimum allowable continuous flow rate for the pump at full rated speed.

2.4 PUMP SYSTEM CONTROLLER

A. The pump system controller shall be a standard product developed and supported by the pump manufacturer.

B. The controller shall be microprocessor based capable of having software changes and updates via personal computer (notebook). The controller user interface shall have a color display with a minimum screen size of 3-1/2” x 4-5/8” for easy viewing of system status parameters and for field programming. The display shall have a back light with contrast adjustment. Password protection of system settings shall be standard.

C. The controller shall provide internal galvanic isolation to all digital and analog inputs as well as all fieldbus connections.

D. The controller shall have the ability to be connected to a battery to maintain power on controller during periods of loss of supply power.

E. The controller shall have built in data logging capability. Logged vales shall be graphically displayed on the controller and able to be exported. A minimum of 3600 samples per logged value with the following parameters available for logging:

- Estimated flow-rate
- Speed of pumps
- Inlet pressure
- Process Value (usually discharge pressure of differential pressure depending on application)
- Power consumption
- Controlling parameter (process value)

F. The controller shall display the following as status readings from a single display on the controller (this display shall be the default):

- Current value of the control parameter, (typically discharge pressure)
- Most recent existing alarm (if any)
- System status with current operating mode
- Status of each pump with current operating mode and rotational speed as a percentage (%)
- Estimated flow-rate, (not requiring flow meter connection)

G. The controller shall have as a minimum the following hardware inputs and outputs:

- Three analog inputs (4-20mA or 0-10VDC)
- Three digital inputs
- Two digital outputs
- Ethernet connection
- Field Service connection to PC for advanced programming and data logging

H. Pump system programming (field adjustable) shall include as a minimum the following:

- Water shortage protection (analog or digital)
- Sensor Settings (Suction, Discharge, Differential Pressure analog supply/range)
- PI Controller (Proportional gain and Integral time) settings
- High system pressure indication and shut-down
- Low system pressure indication and shut-down
- Low suction pressure/level shutdown (via digital contact)
- Low suction pressure/level warning (via analog signal)
- Low suction pressure/level shutdown (via analog signal)
- Flow meter settings (if used, analog signal)

I. The system controller shall be able to accept up to seven programmable set-points via a digital input, (additional input/output module may be required).

J. The controller shall have advanced water shortage protection. When analog sensors (level or pressure) are used for water shortage protection, there shall be two indication levels. One level is for warning indication only (indication that the water level/pressure is getting lower than expected levels) and the other level is for complete system shut-down (water or level is so low that pump damage can occur). System restart after shut-down shall be manual or automatic (user selectable).

K. The system pressure set-point shall be capable of being automatically adjusted by using an external set-point influence. The set-point influence function enables the user to adjust the control parameter (typically pressure) by measuring an additional parameter. (Example: Lower the system pressure set-point based on a flow measurement to compensate for lower friction losses at lower flow rates).

L. The controller shall be capable of receiving a remote analog set-point (4-20mA or 0-10 VDC) as well as a remote system on/off (digital) signal.

M. The controller shall be able to adjust the ramp time of a change in set point on both an increase or decrease change in set point.

N. The pump system controller shall store up to 24 warning and alarms in memory. The time, date and duration of each alarm shall be recorded. A potential-free relay shall be provided for alarm notification to the building management system. The controller shall display the following alarm conditions:

High System Pressure	Low system pressure
Low suction pressure (warning and alarm)	Individual pump failure
VFD trip/failure	Loss of sensor signal (4-20 mA)
Loss of remote set-point signal (4-20mA)	External Fault

O. The pump system controller shall be mounted in a 304 stainless steel UL Type 4X rated enclosure. A self-certified NEMA enclosure rating shall not be considered equal. The entire control panel shall be UL 508 listed as an assembly. The control panel shall include a main disconnect, circuit breakers for each pump and the control circuit and control relays for alarm functions.

<u>Control panel options shall include, but not be limited to:</u>

- Pump Run Lights
- System Fault Light
- Surge Arrestor
- Emergency/Normal Operation Switches Service Disconnect Switches
- Configurable Digital Outputs available for monitoring (See section 13441 for outputs to SCADA)
- Qty (7) Configurable Digital Inputs available for control

P. The controller shall be capable of receiving a redundant sensor input to function as a backup to the primary sensor (typically discharge pressure).

Q. The controller shall have a pump “Test Run” feature such that pumps are switched on during periods of inactivity (system is switched to the “off” position but with electricity supply still connected). The inoperative pumps shall be switched on for a period of two to three (3-4) seconds every 24 hours, 48 hours or once per week and at specific time of day (user selectable).

R. The controller shall be capable of changing the number of pumps available to operate or have the ability limit the maximum power consumption by activation of a digital input for purposes of limited generator supplied power.

S. The controller shall be capable of displaying instantaneous power consumption (Watts or kilowatts) and cumulative energy consumption (kilowatt-hours).

T. The controller shall be capable of displaying instantaneous specific energy use (kW/gpm), (optional flow meter must be connected).

U. The actual pump performance curves (5th order polynomial) shall be loaded (software) into the pump system controller. Pump curve data shall be used for the following:

   a. Display and data logging of calculated flow rate (not requiring flow measurement)
   b. Proportional pressure control
   c. Pump outside of duty range protection
   d. Pump cascade control based on pump efficiency

V. The controller shall be capable of displaying an estimated flow-rate on the default status screen.

W. The controller shall have proportional pressure control to compensate for pipe friction loss by decreasing pressure set-point at lower flow-rates and increasing pressure set-point at higher flow-rates by using actual flow rate or calculated flow rate. Proportional pressure control that uses pump speed or power consumption only shall not be considered equal to proportional pressure control that uses actual or calculated flow rate.

X. The controller shall have Ethernet connection with a built in server allowing for connection to a network with read/write access to controller via web browser and internet.

Y. The controller shall have a programmable Service Contact Field that can be populated with service contact information including: contact name, address, phone number(s) and website.

2.5 SEQUENCE OF OPERATION

A. The system controller shall operate equal capacity variable speed pumps to maintain a constant discharge pressure or differential pressure (system set-point), depending on the application. The system controller shall receive an analog signal [4-20mA] from the factory installed pressure transducer on the discharge manifold, indicating the actual system pressure.

   Standard Cascade Control (Pumping Efficiency Based):
   The pump system controller shall adjust pump speed as necessary to maintain system set-point pressure as flow demand increases. Utilizing the pump curve information (5th order polynomial), the pump system controller shall stage on additional pumps when pump hydraulic efficiency will be higher with additional pumps in operation. Exception: When the flow and head are outside the operating pump(s) allowable operating range the controller shall switch on an additional pump thus distributing flow and allowing all pump(s) to operate in allowable operating range. When the system pressure is equal to the system set-point, all pumps in operation shall reach equal operating speeds. The pump system controller shall have field adjustable Proportional Gain and Integral time (PI) settings for system optimization.

B. The system controller shall be capable of switching pumps on and off to satisfy system demand without the use of flow switches, motor current monitors or temperature measuring devices.

C. All pumps in the system shall alternate automatically based on demand, time and fault. If flow demand is continuous (no flow shut-down does not occur), the system controller shall have the capability to alternate the pumps every 24 hours, every 48 hours or once per week. The interval and actual time of the pump change-over shall be field adjustable.

D. The system controller shall be able to control a pressure maintenance pump, (jockey pump), in the system in pressure boosting applications. The set point of the pressure maintenance pump shall be able to be any value above or below the pump system's set point. The pressure maintenance pump shall be able to be staged on as back-up pump when capacity of pump system is exceeded.

2.6 LOW FLOW STOP FUNCTION (Constant Pressure Applications)

The system controller shall be capable of stopping pumps during periods of low-flow or zero-flow without wasting water or adding unwanted heat to the liquid. Temperature based no flow shut-down methods that have the potential to waste water and add unwanted temperature rise to the pumping fluid are not acceptable and shall not be used.

Standard Low Flow Stop and Energy Saving Mode
If a low or no flow shut-down is required (periods of low or zero demand) a bladder type diaphragm tank shall be installed with a pre-charge pressure of 70% of system set-point. The tank shall be piped to the discharge manifold or system piping downstream of the pump system. When only one pump is in operation the system controller shall be capable of detecting low flow (less than 10% of pump nominal flow) without the use of additional flow sensing devices. When a low flow is detected, the system controller shall increase pump speed until the discharge pressure reaches the stop pressure (system set-point plus 50% of programmed on/off band, adjustable). The pump shall remain off until the discharge pressure reaches the start pressure (system set-point minus 50% of programmed on/off band, adjustable). Upon low flow shut-down a pump shall be restarted in one of the following two ways:

A. Low Flow Restart: If the low flow condition still exists, the pump shall start and the speed shall again be increased until the stop pressure is reached and the pump shall again be switched off.

B. Normal Flow Restart: If the pump system controller determines a low flow condition no longer exists the pump shall start and the speed shall be increased until the system pressure reaches the system set-point.

2.6 SYSTEM CONSTRUCTION

A. Suction and discharge manifold construction shall be in way that ensures minimal pressure drops, minimize potential for corrosion, and prevents bacteria growth at intersection of piping into the manifold. Manifold construction that includes sharp edge transitions or interconnecting piping protruding into manifold is not acceptable. Manifold construction shall be such that water stagnation can not exist in manifold during operation to prevent bacteria growth inside manifold.

B. The suction and discharge manifolds material shall be 316 stainless steel. Manifold connection sizes shall be as follows:

3 inch and smaller:	Male NPT threaded
4 inch through 8 inch:	ANSI Class 150 rotating flanges

C. Pump Isolation valves shall be provided on the suction and discharge of each pump. Isolation valve sizes 2 inch and smaller shall be nickel plated brass full port ball valves. Isolation valve sizes 3 inch and larger shall be a full lug style butterfly valve. The valve disk shall be of stainless steel. The valve seat material shall be EPDM and the body shall be cast iron, coated internally and externally with fusion-bonded epoxy.

D. A spring-loaded non-slam type check valve shall be installed on the discharge of each pump. The valve shall be a wafer style type fitted between two flanges. The head loss through the

check valve shall not exceed 5 psi at the pump design capacity. Check valves 1-1/2" and smaller shall have a POM composite body and poppet, a stainless steel spring with EPDM or NBR seats. Check valves 2" and larger shall have a body material of stainless steel or epoxy coated iron (fusion bonded) with an EPDM or NBR resilient seat. Spring material shall be stainless steel. Disk shall be of stainless steel or leadless bronze.

E. For systems that require a diaphragm tank, a connection of no smaller than ¾" shall be provided on the discharge manifold.

F. A pressure transducer shall be factory installed on the discharge manifold (or field installed as specified on plans). Systems with positive inlet gauge pressure shall have a factory installed pressure transducer on the suction manifold for water shortage protection. Pressure transducers shall be made of 316 stainless steel. Transducer accuracy shall be +/- 1.0% full scale with hysteresis and repeatability of no greater than 0.1% full scale. The output signal shall be 4-20 mA with a supply voltage range of 9-32 VDC.

G. A bourdon tube pressure gauge, 2.5 inch diameter, shall be placed on the suction and discharge manifolds. The gauge shall be liquid filled and have copper alloy internal parts in a stainless steel case. Gauge accuracy shall be 2/1/2 %. The gauge shall be capable of a pressure of 30% above its maximum span without requiring recalibration.

H. Systems with a flooded suction inlet or suction lift configuration shall have a factory installed water shortage protection device on the suction manifold.

I. The base frame shall be constructed of corrosion resistant 304 stainless steel. Rubber vibration dampers shall be fitted between each pumps and baseframe to minimize vibration.

J. Depending on the system size and configuration, the control panel shall be mounted in one of the following ways:

On its own base (floor mounted with plinth)

2.8 TESTING

A. The tester used for testing the pump system shall be constructed and calibrated according to the requirements of hydraulic test standard ISO 9906.

B. The entire pump station shall as a minimum be factory tested for functionality and documented results of functionality test supplied with pump station.

<u>Functionality testing shall include the following parameters:</u>

1. Complete System Hydrostatic Test – 1.5 times the nameplate maximum pressure
2. No-Flow Detection Shutoff Test
3. Water Shortage Test
4. Two-Point Setpoint Performance Test.

C. Water used for testing shall be treated with three different filtration systems to ensure only clean water is used for testing pump station.

1. 25 micron mechanical filter – removes solid parts from water
2. Activated carbon filter – keeps water clear and eliminates odor
3. Ultraviolet light system – kills all bacteria growth

D. Optional performance testing shall include:
   1. 10-Point Verified Performance Test

2.8 WARRANTY

A. The warranty period shall be a non-prorated period of 24 months from date of installation, not to exceed 30 months from date of manufacture.

PART 3 – EXECUTION

3.1 INSTALLATION

A. The installation shall be done in accordance with the manufacturer's written procedures and instructions.

END OF SECTION

SECTION 11860 – BLOWER, POSITIVE DISPLACEMENT

PART 1 – GENERAL

1.1 SCOPE

Furnish all labor, materials, equipment and incidentals to install three (3) positive displacement blowers and one (1) air flow meter, in place complete and operable, with all necessary accessories, tools, drives, piping, fittings, valves, connectors, safety devices, controls, and spare parts to obtain a workable installation suitable for continuous operation 24 hours per day, as shown and specified herein, in accordance with the requirements of the Contract

1.2 RELATED WORK

The requirements of Section 11000, General Equipment Requirements apply to this section.

1.3 SUBMITTALS

The following information shall be submitted to the engineer. In accordance with Section 01300, copies of all materials required to establish compliance with this Section. Submittals shall include the following:

A. Product Data: Include the following:

i. Descriptive literature, brochures, catalogs, cut-sheets and other detailed descriptive material of the equipment.

ii. Complete dimensioned shop drawing including wiring diagram.

iii. A list of spare parts and optional equipment.

iv. Operation and maintenance manuals with equipment descriptions, operation instructions, drawings, troubleshooting, recommended maintenance schedule, and/or the recommended lubricants.

v. Manufacturer's Warranty

B. Blowers

i. Certified shop and erection drawings showing important details of construction dimensions, anchor bolt locations, and field connections.

ii. Details of the motor, gear reducer and lubrication points.

iii. Complete motor data.

iv. Total weight of the equipment including the weight of the single largest item.

C. Air Flow Meter

i. Manufacturer's certification of accuracy for meter, stating that meter was factory calibrated to the required limits of accuracy.

D. Operations and maintenance manual: See Section 01300.

1.4 DELIVERY, STORAGE, AND HANDLING OF EQUIPMENT

A. Equipment shall be shipped and delivered fully assembled, except where partial disassembly is required in order to conform to transportation regulations or for the protection of components.

B. Contractor shall be responsible for unloading and shall have equipment on-site at the time of delivery permitting proper hoisting of the equipment.

PART 2 – PRODUCTS

2.1 BLOWERS, POSITIVE DISPLACEMENT

A. General

The blowers shall be positive displacement, rotary tri-lobe type, designed for air or other inert gas service, and belt driven via electric motor. Blower packages shall be fully-enclosed to minimize pulsation and noise. All routine maintenance points and utility connections shall be easily accessible. Three (3) blowers shall be provided. One (1) blower shall service the aerobic digester system, and one (1) blower shall be a standby unit.

Blowers shall be Kaeser Compressors Com-paK Rotary Blower Package CB111C, or approved equal.

2.2 OPERATING CONDITIONS

The blowers shall operate by trapping inlet air between the rotor and casing and lightly compressing it as it reaches the discharge port. The heat generated by compression dissipates with the flow medium.

<u>Blower B-1001A / B-1001B</u>

System:	Aerobic Digester
Rated Power	20 Hp

Rated Speed	4880 rpm
Flow Rate	291 cfm
Maximum pressure differential	10.1 psi
Sound power level	86 dB

2.3 EQUIPMENT REQUIREMENTS

A. Positive displacement blowers shall be of rotary, 2-lobe or 3-lobe, involute design, suitable for continuous operation 24-hours per day. All blowers shall be based upon data previously established by tests in accordance with DIN/ISO 1217.

B. Drive shall be a V-belt-type with heavy-duty, high efficiency electric motor, suitable for indoor installation, for 460-volt, 3-phase, 60-Hz supply.

C. Motor shall be driven by a variable frequency drive

2.4 ACCESSORIES

Each blower shall be furnished as a complete unit, with the following minimum accessories, with sound enclosures, all necessary pipes, fittings, supports, controls, and other components shown on drawings:

1 - air intake filter-silencer with support
1 - set of spring-type heavy-duty vibration isolators
1 - set of galvanized anchor bolts, nuts and washers
1 - discharge silencer
2 - stainless steel, braided, flanged flexible connectors
1 - pressure relief valve
1 - silent spring-loaded check valve
1 - butterfly valve suitable for hot gases
1 - pressure gage with valve
1 - pressure switch

2.5 EQUIPMENT CONSTRUCTION

Basic equipment construction and materials required shall be as follows:

A. Casing: The casing shall be made of high strength, close grained, cast iron, and shall be adequately ribbed to resist deflection and facilitate cooling. The casing shall be precision machined to allow for minimum clearances. The design of the housing shall allow for horizontal blower installation with minimal modification. The casing design shall incorporate channels at the discharge port to minimize pulsation.

B. Rotor Assemblies: The rotor assemblies shall be one piece and precision machined from high strength, close grain, spheroidal graphite ductile iron allowing smooth, efficient operation at all rated speeds and pressures. Rotors shall be closed-end using a threaded plug. The integral shafts shall be designed to carry higher loads than calculated for the maximum design load and shall incorporate replaceable seal ring wear sleeves. The rotor assemblies shall be statically and dynamically balanced. Removal of material from the face of the rotor for balancing purposes is not allowed. The rotors shall be a tri-lobe design in order to minimize pulsation and noise.

C. End Plates: The gear-end plate shall be cast iron. The drive-end plate shall be integral to the blower casing ensuring heavy-duty construction, long life, and maximum machine noise attenuation in all applications. Bearing fits shall be precision machined to ensure accurate positioning of the rotors in the casing. Replaceable seal wear inserts shall be provided on the drive-end and gear-end plates. The end plate covers shall be heavy-duty cast iron with a precision-machined sealing face. Aluminum oil sump covers are not allowed.

D. Timing Gears: The rotor timing gears shall be precision machined from case hardened and ground alloy steel. Each timing gear shall be straight cut and beveled to eliminate axial bearing loads and ensure long life as well as quiet operation. Gears shall be finish ground on a precision grinder to ensure concentricity. The timing gear set shall be taper-mounted on the rotors for improved rebuildability and accurate timing. Keyed, hub mounted, or taper-pinned timing gear mounting designs are not acceptable.

E. Bearings: All four shaft support locations shall incorporate large, heavy-duty cylindrical roller bearings designed to handle extreme radial loads without sacrificing product integrity and reliability. The minimum acceptable L10 design life at the blower's maximum rated speed and maximum rated differential pressure shall be no less than 40,000 hours.

F. Lubrication: Both the gear-end and the drive-end of the blowers shall be oil splash lubricated for minimal maintenance and long service life. Grease lubricated bearings are not acceptable. The lubrication design shall ensure adequate lubrication of the timing gears and bearings.

G. Seals: There shall be four (4) piston ring type labyrinth seals at each end of each rotor to minimize leakage and maintenance costs. The cavity between the air-side and oil-side seals shall be vented through threaded ports to allow external purging or containment of any lubricating oil or process gas that may have migrated past the seals. Enough ports shall be incorporated in the design to ensure that the cavity is vented from the bottom no matter what blower drive-to-driven shaft orientation is utilized.

A vent cavity shall be provided on all four (4) sets of piston ring type labyrinth seals. The two (2) vent holes located on the bottom side of the blower shall be left open. The vent holes at other locations shall be closed off with threaded metal plugs.

The input drive shaft seal shall be a high temperature radial lip type seal with Viton elastomers. The seal design shall incorporate a replaceable wear sleeve on the input drive shaft.

H. Drive Motors: Drive motors shall be designed, manufactured, and tested in accordance with the latest revised editions of NEMA MG 31.4, IEC, IEEE, ANSI, and AFBMMA standards as applicable and shall be capable of continuous operation. Motor shall be suitable for use with a variable frequency type adjustable speed drive. The motor nameplate horsepower rating shall not be exceeded at the design speed. The temperature rise of the motor windings shall not exceed IEC and NEMA standards when the motor is operated continuously at the rated horsepower, rated voltage, and rated frequency in ambient conditions of 40 degrees C.

The motors shall conform to the following:

Mounting:	Horizontal
Type:	Squirrel Cage Induction
Enclosure:	Totally Enclosed – Fan Cooled/IP-55
Service Factor:	1.15
Duty Cycle:	Continuous
Ambient Temperature:	40ºC/104°F
Starting Current:	<x10 Full Load Current Maximum
Winding Insulation:	Class F
Temperature Rise:	Class B
Power:	460 VAC/60 Hz/3 Phase
Bearing Lubrication:	Oil, Oil Mist, or Grease (with grease addition fittings and grease relief fittings)
Speed Control:	Variable Speed (Variable Frequency Drive)
Motor Protection:	PTC thermistors (connection by others)

2.6 BLOWER PACKAGES

The packaged blowers are to be standard engineered designs of a CE certified manufacturer regularly engaged in the production of packaged blowers to ensure single source accountability and shall include the following listed standard features:

1. The packages shall be driven through V-belts and sheaves. The drive assembly shall be of the high capacity type, oil and heat resistant, with a minimum service factor of 1.5.

2. Automatic tensioning of the V-belts by use of a pivoting, swing frame motor base with adjustable spring assistance and visual indication of V-belt tension shall be

provided to ensure the V-belts remain properly tensioned with minimal maintenance and to extend V-belt, sheave, and bearing life. Adjustment of the tensioning device shall be accomplished without removal of the guard or loosening of the motor mounting bolts.

3. The drive guard shall be the manufacturer's standard sheet metal with provision for ventilation. The installed guard shall be fully enclosed, easily removable, and designed to meet current OSHA recommendations and CE standards.

4. The base shall be an elevated, rigid, fabricated steel design with a solid sub-base. The absorptive type discharge silencer shall be integral to the frame in order to minimize space requirements. The blower shall be mounted horizontally for a compact frame.

5. To prevent transmission of vibration and noise, as well as secure the package to the foundation, the base shall include vibration isolators made of rubber in a steel footing equipped with mounting holes for anchoring purposes.

6. Oil drains from the blower drive-end and gear-end lubricating oil sumps shall be piped to the front of the base for ease of maintenance. The drain valves shall be a ball valve with a fully retained and gasketed threaded cap.

7. The inlet filter shall be integral to the inlet silencer and shall include a polyester element for minimal pressure drop. The BB52C element is a pleated cartridge type.

8. The inlet silencer shall be of the absorptive type, directly connected to the inlet port of the blower, and shall be mounted horizontally.

9. The discharge silencer shall be designed specifically for the frequency of the blower for maximum attenuation and shall use a combination of absorption, reflection, and diffusion. The silencer shall be directly connected to the outlet port of the blower. The discharge silencer shall be mounted horizontally and shall be integral to the base frame.

10. The relief valve shall be spring loaded and factory installed in a location to protect the blower from excessive differential pressures. The relief valve exhaust shall be piped out of the enclosure.

11. An elastomeric compensator/flex connector shall be provided for connection of the packaged blower to the system piping to reduce transmission of structure borne noise as well as prevent unacceptable loading of the silencer connection and blower casing. The compensator shall be arch-type, flanged with both ANSI and DIN bolting patterns.

12. A sound enclosure shall be provided. The sound enclosure shall be sheet steel construction with powder coat finish. It shall have acoustic foam insulation and

shall provide sound attenuation of up to 20 dB(A). The enclosure shall have a hinged panel on top and a removable panel on the front of the package to allow maintenance access. Panels shall incorporate locking closures. At least one installed, integral ventilation fan, sized to provide adequate cooling of the package, shall be provided (wiring of fan by others). Unless specified, the fan voltage will be the same as the main motor voltage.

13. A pressure gauge shall be provided, pre-piped and panel mounted, on the sound enclosure.

14. A temperature gauge, with adjustable switching point and contact, shall be provided pre-piped and panel mounted on the sound enclosure.

15. A filter differential pressure gauge shall be provided pre-piped and panel mounted on the sound enclosure.

16. A discharge pressure switch for high discharge pressure alarm conditions.

17. A Perspex gauge cover shall be included to protect the gauges.

18. The blower package shall be designed to allow all preventive maintenance to be performed from the front of the package. All utility connections and process connections shall be at the rear of the package.

19. The blower package shall be capable of being installed directly adjacent to another blower packages of similar design and shall be capable of mounting next to the wall without maintenance interference.

2.7 FACTORY TESTING

1. All critical dimensions of the blower components actually provided by the manufacturer shall be verified and documented prior to assembly.

2. The rotating parts of each blower actually provided by the manufacturer shall be statically and dynamically balanced before final assembly. The blower alone shall operate without excessive vibration.

3. Each blower actually provided by the manufacturer shall be slip tested. The Slip RPM shall be documented. Each bare blower provided by the manufacturer shall be operated at its maximum rated speed and differential pressure for thirty (30) minutes. A document certifying that the supplied blowers conform to the design specifications shall be provided.

4. On completion of final assembly of the packaged blower and prior to shipment, each packaged blower shall be mechanically run for a minimum of fifteen (15) minutes.

2.8 QUALITY ASSURANCE

1. The blowers and equipment covered by this specification are intended to be standard blower equipment, of proven ability, as manufactured by a reputable CE certified manufacturer having at least two (2) years experience in the production of such blowers. The blowers furnished shall be designed, constructed, and installed in accordance with the best practice and methods and shall operate satisfactorily when installed.

2. All equipment furnished under this specification shall be new, unused, and shall be the standard product of a manufacturer having a successful record of manufacturing and servicing the equipment and systems specified herein for a minimum of two (2) years.

2.9 WARRANTY

1. The manufacturer and Contractor shall warrant the blower being supplied against all defects in workmanship and materials for a period of sixty (60) months from date of shipment. All other package components shall be warranted for a period of twelve (12) months from date of startup, not to exceed eighteen (18) months from the date of shipment.

2. The manufacturer's warranty period shall run concurrently with the Contractor's warranty period. No exception to this provision shall be allowed. The Contractor shall be responsible for proper storage of the equipment so as to remain in "as shipped" condition. If the equipment remains in storage at the job site for longer than six (6) months before installation, the Contractor shall provide factory service personnel for a complete inspection of the equipment. Anywork necessary to restore the equipment to "as shipped" condition shall be the responsibility of the Contractor.

2.10 AIR FLOW METERS

A. General

Air flow meter shall be installed to measure flow through the pipe sections shown on the drawings. The air flow meter system shall include a sensor designed to generate a flow signal proportional to the flow velocity in the pipe. The transmitter shall be designed to convert the flow signal into a 4-20 mA current output proportional to the flow rate.

Air flow meter shall be a Kurz 454FTB-12-HT, or approved equal.

B. Performance

i. Accuracy: ±1 percent of reading with 0.25 percent repeatability

ii. Velocity Range: Actual 0 flow to 24,000 SFPM, with 1000:1 turndown ratio

iii. Velocity Response Time: 0.5 second for a 50 percent velocity flow step change, 3 seconds for 91 percent velocity flow step change. Response times shall be to actual step changes in flow.

iv. Process Temperature Rating: -40 degree Celsius to 500 degree Celsius

v. Electronics Temperature Rating: -40 degree Celsius to 65 degree Celsius

vi. Process Pressure Rating: 300 psig

vii. Pressure Drop: Minimal

C. Sensor

i. Materials: Hastelloy Allow C-276 sensors in an all welded support tube assembly.
ii. Sensor Protection: A permanently attached stainless steel window insertion.

D. Electronics

i. Interchangeable circuit board that can be configure to operate with any process sensor.

ii. Output: 4-20 mA DC

iii. Communications: Modbus, ASCII, RTU or HART 7

iv. Display: Flow rate

2.11 SPARE PARTS

Provide the following spare parts.

A. Three (3) V-Belt Sets, one (1) for each blower

B. Three (3) Filter Fleeces, one (1) for each blower

C. Blower Oil

PART 3 – EXECUTION

3.1 INSTALLATION, START-UP OPERATOR TRAINING

A. Contractor shall verify all dimensions in the field to ensure compliance of equipment dimensions with the drawings. Contractor shall notify engineer of significant deviations.

B. Installation of the equipment shall be in strict accordance with the contract documents and the manufacturer's instructions and shop drawings. Manufacturer shall supply anchor bolts for the equipment. Contractors shall install the anchor bolts in accordance with the manufacturer's recommendations.

C. After Installation touch-up paint shall be applied to all scratched, abraded and damaged shop painted surfaces. Coating type and color shall match shop painting.

D. Supplier shall furnish the services of a factory-trained service engineer for one (1) trip including a total of one (1) workdays to inspect the installation, observe start up, and provide operator training.

   i. Equipment shall not be energized, or "bumped" to check the electrical connection for motor rotation without the service engineer present.

   ii. The service engineer shall make all necessary adjustments and settings to the controls.

3.2 AIR FLOW METER

Perform pressure and leak testing of meters. Demonstrate that meter accurately measures flow during the operating demonstration. Recalibrate meter if it does not read within the accuracy limits stated. Recalibration must be done by a factory-trained representative of the meter manufacturer.

END SECTION

SECTION 13120 – Portable Buildings

PART 1 – GENERAL

1.1 SUMMARY

A. The work of this Section includes providing a portable building to be used as an on-site office for the wastewater treatment plant. The Contractor shall be responsible for delivery, blocking the trailer, tie-downs, connecting all utilities and SCADA to the unit.

1.2 SECTION INCLUDES

A. Plans for the portable building

B. Plans for the ADA compliant access ramp

1.3 SUBMITTALS

A. Shop Drawings: Submit shop drawings including design structural calculations, stamped by engineers, licensed in the State of Hawaii.

PART 2 – PRODUCTS

2.1 MANUFACTURER

A. General

The portable trailer shall be supplied by Willscot or approved equal

B. Specifications

See attached specifications at the end this Section

PART 3 – EXECUTION

3.1 The Contractor shall install the trailer and ramp per manufacturer's recommendation.

END SECTION

SPECIFICATION SHEET

				DESIGN LOADS:	
Date:	4/2/2014	Size:	12x44	Floor:	50
Customer:	**Hawaii Modular Space**	Description:	Office w/(1) Crswll/HCRR-PT	Wind:	105/D
Location:	Hawaii		Mobile	Roof:	20
Project:	**Lease Unit**	Insignias:	Third Party		
			Install PFS sticker below electrical panel		
			MBI Seals - One per Module		

STEEL FRAME	
Size:	(1) 12x44
Type:	Conventional (no outriggers, but with full length front and rear C-channel cross members)
Main Rail:	10" Jr I-beam
Axles:	3-Brake with 8:00x14.5 - 14 ply tires
Hitch:	Standard
NOTE:	**All framing and sheathing materials shall be treated with water-borne preservatives in accordance with AWPA Standards U1 to the requirements of Use Category 2 (UC2) and specifically rated as suitable for use in Hawaii**
FLOOR SYSTEM	
Joists:	PT 2x8 @ 16" oc
Rims:	Single LVL 7-1/8" - Hand Treated
Bottom Board:	Class "A" woven polyethylene fabric
Insulation:	None
Decking (1st):	3/4" BarrierFloor T&G with SmartGuard - Glued and Nailed
Decking (2nd):	1/4" Fiberock
WALL FRAMING	
Framing (Exterior):	PT 2x4 @ 16" oc - **Height = 96-1/4"**
Framing (Interior):	PT 2x4 @ 16" oc - Plumbing walls to be 2x6 and 2x8 - **Height = 96-1/4"**
Frame For:	Doors, Windows and Wall mount HVAC Unit
ROOF STRUCTURE	
Framing:	Bow Trusses @ 24" oc, Hand Treated
Bottom cover:	Class "A" woven polyethylene fabric
Rims:	PT 2x10 Lumber
Insulation:	R30 Cellulose blow in
Sheathing:	1/2" PT CDX plywood
Venting:	Eave

EXTERIOR WALL FINISH

Insulation (Exterior):	R13 unfaced fiberglass batt
Moisture protection:	Wrap lower 12" of building and corners with moist-stop - Wrap building with Tyvek building wrap
Siding:	7/16" LP SmartSide Panel T1-11 with grooves 8" oc - 4x9
Trims: Corners:	1x4 Finger jointed Cedar - **2" x 2" galvanized flashing installed over siding and under corners**
Fascia:	5/8" No Groove Duratemp
Doors:	1x4 Finger Jointed Cedar
Windows:	1x4 Finger Jointed Cedar
Belt Rail:	5" x 7/16" No Groove LP SmartSide Panel
Z flashings:	1/2" at bottom of siding and at siding break
NOTE:	**Use hot dipped galvanized fasteners on all siding and exterior trims**
Type of paint:	Pittsburgh Paints
	SIGNS AND ID PLATES INSTALLED BY BLAZER

ROOFING

Cover:	30 ga. galvanized with J-rail - **Fasten with stainless steel screws**
Drainage:	**Gutters and downspouts - Provided and installed on site by others**

DOORS

	EXT/INT	QTY	SIZE	TYPE	HINGES		FINISH	LOCK	DEADBOLT		SPECIAL
1	EXT	2	3'x6'8"	TELSTAR PRO	NRP		TELL GRAY	LC1281 KEYED	IDB PREP		
2	INT	1	3'x6'8"	PW/HV	STD		VW OAK	LC2675 PASSAGE			
3	INT	1	3'x6'8"	PW/SV	STD		VW OAK	LC2676 PRIVACY			OCCUPIED INDICATOR

TAPE OVER KEYHOLES FOR SHIPPING

ALL DOOR HARDWARE TO HAVE #626 SATIN CHROMIUM PLATED FINISH

EXTERIOR DOOR AND FRAME EQUIPPED WITH INVISIBLE DEADBOLT PREP (IDB). DEADBOLT TO BE PROVIDED AND INSTALLED AT SITE BY OTHERS.

PROVIDE WALL BUMPERS FOR ALL INTERIOR DOORS

EXTERIOR

TelStar Pro = 20 ga. prehung poly insulated door with 18 ga. frame, weather-stripping, ADA threshold and sweep

INTERIOR

PW = Prehung Wood
HV = Hollowcore Vinylwrap
SV = Solidcore Vinylwrap

LOCKS

Tell LC1281 Office Entry - Grade 1
Tell LC2675 Passage - Grade 2
Tell LC2676 Privacy - Grade 2

WINDOWS

	EXT/INT	QTY	SIZE W x H	BRAND	SLIDER HORIZONTAL	GLAZING	FINISH			
1	EXT	6	4'x3'	ATRIUM	X	DUAL LOW E3	WHITE VINYL			

COVER WINDOWS FOR SHIPPING

GALVANIZED FLASHING INSTALLED UNDER SIDING AND OVER TOP FLANGE OF WINDOWS UNDER TRIM

FLOOR COVER

Restroom:	Congoleum "Diamond" #9230 sheet vinyl
Base:	4" rubber
All Else:	Armstrong "Standard Excelon" 1/8" VCT "Sandrift White" #51858
NOTE:	**Wax floor prior to shipment**
Base:	Shoe

WALL COVER		
Sheathing:	1/2" CDX PT Plywood under paneling at Grids 1 and 2	
Insulation (Interior):	R11 unfaced fiberglass batt sound insulation at restroom walls to bottom of rafters	
Restroom:	1/4" paneling "Brookstone Birch" and "Frosty White" plastic laminate wainscot per code	
All Else:	1/4" paneling "Brookstone Birch"	
CEILING		
Entire Building:	2'x4' T-bar grid and tile - Armstrong "Cortega" #769A	
Ceiling Height:	**7'-6" AFF**	
INTERIOR TRIM		
Wainscot:	Aluminum inside corners with vinylwrap batts at top	
Window surrounds:	Paneling	
Window casing:	Prefinished outside casing	
Doors (Exterior):	Paneling surrounds with prefinished outside corners	
Doors (Interior):	Vinylwrap Oak wood doors, jambs and casing	
SPECIALTIES		
Toilet Tissue:	(1) Single roll	
Mirror:	(1) 18"x30" - Glass with no frame	
Grab Bars:	(1) 18", (1) 36" and (1) 42"	
HVAC		
Comb Heat/AC:	(1) Bard wall hung Air Conditioner - 2 ton 0 kw - **No Heat Strip**	
Supply Ducting:	Overhead - insulated flexduct with flow controls at supply plenum	
Diffuser:	24"x24" T-bar with manual dampers	
Thermostat:	(1) Programmable - Peco T4932SCH-001	
Return Air:	Thru return air grill in wall and return air grill in crosswall above door	
Outside Air:	At machine	
NOTE:	**Insulate all wyes, elbows, ducts, and plenum- minimum R value 5.0 or greater**	
PLUMBING		
Toilet - Handicap:	(1) Handicap Height, Elongated Bowl, Gravity Tank	Gerber 21-718
Lavatory:	(1) 19" x 17" Wall Hung, One Piece Wall Hanger	Gerber 12-314
Faucet:	(1) Ceramic Disc, Hot Limit Stop, ADA Lever Handle	A/S 7385.400.002
Water Heater:	**NONE**	
Water Lines:	**Copper Only - Single Point Water Stub**	
Sewer Lines:	PVC DWV Schedule 40 Plastic - Single Point Waste Stub	

ELECTRICAL		
Service:	120/240V Single phase - Stub down	
Meter Base:	**Provided and installed on site by others**	
Panel:	(1) 100 amp	Square D HOM1224M100
Material:	Metallic Raceway System - EMT, MC Cable and/or Flex Conduit	
Receptacles:	(9) Duplex 20 amp	Leviton CR20
	(3) per Office, (6) Main Area	
	(1) 20 amp GFCI	Leviton 7899
	(1) per Restroom	
	(1) 20 amp GFCI WP	Leviton W7899 w/ Intermatic WP 1100C cover
Automatic Controls:	(3) Occupancy sensor - Wall mount	Square D SLSPWS1277A
	(1) per Office, (1) Restroom, (1) Main Area	
NOTE:	**All devices and face plates to be Ivory**	
Wire For:	(1) Bard wall hung Air Conditioner - 2 ton 0 kw - **No Heat Strip**	
	(1) Programmable Thermostat	
Lights:	(4) Troffer 2'x4' - 3-tube with T-8, 32 watt tubes and single electronic ballasts	
Exhaust Fan/Light Combo:	(1) 150 CFM fan with 42 watt fluorescent light	Broan QTXE150FLT
OTHER		
Building Height:	10'-5" - Add 2'-8" for mobile frame height to get total estimated shipping height of 13'- 1"	
Prevailing wages:	Blazer's estimate does not include any allowance for prevailing wage requirements.	

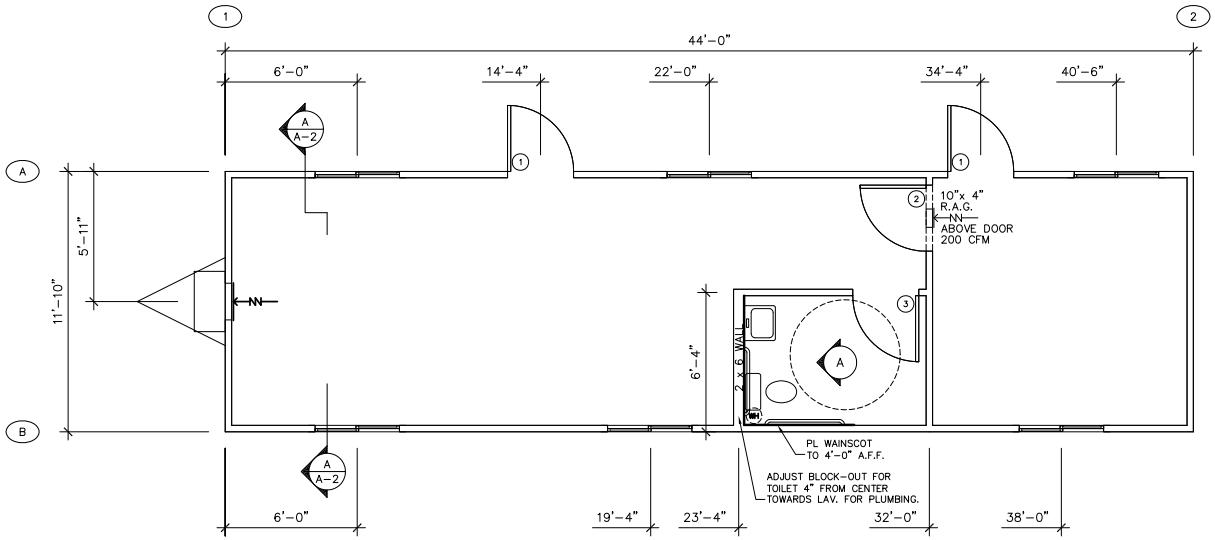

FLOOR PLAN

1/4" = 1'-0"

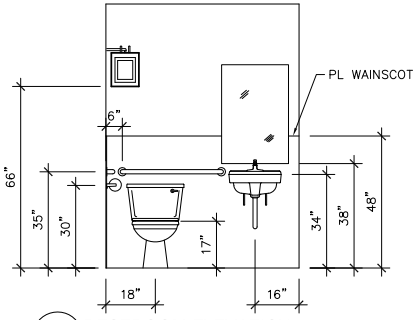

A RESTROOM ELEVATION

3/8" = 1'-0"

	QTY.	SIZE	DESCRIPTION	LOCK	REMARKS
DOORS USE SS FASTENERS. TAPE OVER KEYHOLES FOR SHIPPING.	1	3⁰ 6⁸	STEEL DOOR w/ ALUMINUM JAMB	A53PD	STAINLESS STEEL HINGES PAINT FINISH
	2	3⁰ 6⁸	HOLLOWCORE VINYLWRAP with WOOD JAMB	200DL	STANDARD HINGES VWCO FINISH
	3	3⁰ 6⁸	HOLLOWCORE VINYLWRAP with WOOD JAMB	A40L	STANDARD HINGES VWCO FINISH
WINDOWS USE SS FASTENERS. COVER WINDOWS WITH OSB FOR SHIPPING.	6	4' x 3'	MILGARD– HORIZ. SLIDER– DUAL GLAZE– MILL FINISH SOLAR BRONZE TINT		

- STRUCTURAL DESIGN IS FOR MOBILE TRAILERS BUILT AND INSPECTED AT MANUFACTURER'S PLANT IN OREGON.
- DESIGN IS INTENDED TO BE REVIEWED BY LICENSED HAWAII ENGINEER TO VERIFY CONFORMANCE WITH U.B.C. AND ANY LOCAL REGULATIONS.

DESIGN LOADS:

ROOF.....20 P.S.F.
WIND.....80 M.P.H. EXPOSURE D
FLOOR.....50 P.S.F. or 2000 LB.
SEISMIC.....ZONE 4

DESIGN CODES:

UBC 1997
NEC 2002

1. FOUNDATION DESIGN AND BUILDING CONN. TO FOUNDATION IS BY OTHERS.
2. CHASSIS SPECIFICATION AND DESIGN IS BY OTHERS.
3. TRUSS DESIGN IS BY MITEK INDUSTRIES, INC.

DATE	REVISION	BY

COPYRIGHT 2004, BLAZER INDUSTRIES, INC. THIS MATERIAL IS THE EXCLUSIVE PROPERTY OF BLAZER INDUSTRIES, INC. AND SHALL NOT BE REPRODUCED, USED, OR DISCLOSED TO OTHERS EXCEPT AS AUTHORIZED BY THE WRITTEN PERMISSION OF BLAZER INDUSTRIES.

Blazer INDUSTRIES, INC.
P.O. BOX 489 ■ AUMSVILLE, OR 97325-0489

MOBILE
12 x 44
3rd PARTY

OFFICE for:
Lease Unit
HAWAII MODULAR SPACE

TITLE: FLOOR PLAN
Issue Date: 12-20-04
DRAWN BY: LDG
DATE: 12-20-04
JOB NO: 12999-13001

A-1

R:\ADT3FILE\HAWAII\Stock\1244or.dwg, Plot-FLR, 01/12/2005 09:23:19 AM

FASTEN ALL FRAMING MEMBERS OF END TRUSS AS FOLLOWS:

FASTEN ⅜" SHEATHING WITH 15 GA. x 1¾" STAPLES AT 2" o.c. OUTSIDE OF TRUSS, TYPICAL.

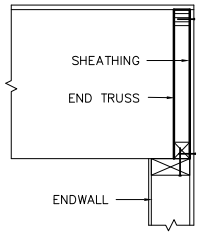

END TRUSS SHT'G

1 1/2" = 1'-0"

VENTING AT ENDWALL TRUSS:

FRAME END TRUSS TO ACCEPT TWO- 13¾" x 6¾" R.O.
ADD NOMINAL 2x FRAMING AROUND VENT OPENINGS.
INSTALL TWO- 16" x 8" VENT GRILLS AT EACH END TRUSS.

FASTENING SCHEDULE

WALLS:

PLATE-TO-STUD	MIN. OF 2- 0.131" x 3" NAILS (SENCO KC27 OR EQUAL)
PANELING-TO-STUD	.030 THICK x ¾" STAPLES AT 6" EDGE, 12" IN FIELD (SENCO K-11)
BOTTOM PLATE-TO-FLOOR	0.131" x 3" NAILS AT 8" oc. (SENCO KC27 OR EQUAL)
SHEATHING-TO-STUD @ SIDEWALL	16 GA. x 1½" STAPLES AT 6" EDGE, 12" FIELD (SENCO N17), ALL EDGES SUPPORTED
SHEATHING-TO-STUD @ ENDWALL	16 GA. x 1½" STAPLES AT 2" EDGE, 6" FIELD (SENCO N17), ALL EDGES SUPPORTED
METAL SIDING-TO-STUDS	#8 x ¾" SCREWS IN FIELD #8 x 1¼" SCREWS AT WINDOWS, DOORS AND TRIM
THREE STUD CORNER CONNECTION	0.131" x 3" NAILS AT 6" (SENCO KC270 OR EQUAL)

FLOOR:

2 x 8 FLOOR JOIST-TO-RIM	MIN. OF 4- 0.131" x 3" NAILS (SENCO KC27 OR EQUAL)
CLASS "A" BOTTOM COVER-TO-JOIST	16 GA. x ⅜" WIDE CROWN STAPLES AT 16" MAX. EDGES ONLY
FLOOR DECKING-TO-2x JOIST	FASTEN DECKING WITH 0.113" x 2⅜" RING SHANK NAILS AT 6" EDGE, 12" FIELD, 4"oc AT BLDG PERIMETER. USE CONSTRUCTION ADHESIVE (AFG01) ON ALL JOISTS. USE 2x4 BLOCKING (FLAT) AT ALL PANEL EDGES 14'-0" FORM EACH END.

ROOF:

RIM-TO-TRUSSES	5- 0.131" x 3" NAILS (SENCO KC27 OR EQUAL) 3 THROUGH TOP RIM, 2 THROUGH BOTTOM RIM
TRUSS-TO-TOP PLATE	0.131" x 3" NAILS @ 6" oc. (SENCO KC27 OR EQUAL)
BOTTOM ROOF RIM-TO-TOP PLATE	0.131" x 3" NAILS @ 8" oc. (SENCO KC27 OR EQUAL)
ROOF DIAPHRAGM ASSEMBLY	1. INSTALL SHEATHING WITH SEAMS OFFSET 4'-0" 2. NO JOISTS IN BOTTOM ROOF RIM OVER SIDEWALL OPENINGS. OFFSET JOINTS BETWEEN ROOF RIMS BY 16" MINIMUM. 3. USE 2 x 4 BLOCKING (FLAT) AT ALL PANEL EDGES 12'-0" FROM EACH END. 4. STAPLE SHEATHING WITH 16 GA. x 1⅜" STAPLES AS FOLLOWS: FIRST 3 TRUSSES AND BLOCKING AT 4" EDGE, 12" IN FIELD, 2½"oc AT BLDG PERIMETER. ALL INTERIOR TRUSSES AT 6" EDGE, 12" IN FIELD.

MATERIAL LIST

ROOF:

ROOFING.....30 GA. GALV. WITH J-RAIL

SHEATHING.....7/16" APA RATED (24/16)

FRAMING.....139" BOW TRUSSES AT 24" oc.

RIMS.....TOP: 2 x 4 D.F.
BOTTOM: 2 x 6 D.F. #2

INSULATION.....R-19 CELLULOSE BLOW-IN

CEILING.....SUSPENDED T-BAR (PER UBC STD. 25-2)

VENTING.....(4) 16" x 8" GABLE END

WALLS:

SIDING.....010 IRONWOOD

SHEATHING.....⅜" APA RATED

TRIM.....019 ALUMINUM CORNERS AND FASCIA

FRAMING..... EXT: 2 x 4 H.F. "STANDARD" or "STUD" or BETTER STUDS @ 16" oc
INT: 2 x 4 H.F. STUDS @ 16" oc
EXCEPT: 2 x 6 PLUMBING WALL

TOP PLATE.....2 x 4 CONTINUOUS MICROLLAM

BOTTOM PLATE.....2 x 4 H.F.

INSULATION.....R-11 FIBERGLASS BATT

INTERIOR FINISH.....¼" PANELING AND P.L. WAINSCOT IN RESTROOM PER CODE

BELT RAIL.....019 ALUMINUM

FLOOR:

COVERING..RR ONLY: CONGOLEUM "DIAMOND" #9143
ALL ELSE: 1/8" VCT

DECKING.....1st: 23/32" A.P.A. RATED STURD-I-FLOOR
2nd: ¼" ULTRAPLY UNDER VCT & VINYL

FRAMING.....2 x 8 D.F. #2 FLOOR JOISTS @ 16" oc

RIMS.....2 x 8 CONTINUOUS MICROLLAM

INSULATION.....R-11 FIBERGLASS BATT

BOTTOM COVER.....CLASS "A"

FRAME:

TYPE.....TRANSVERSE

MAIN RAIL.....10" JR. I-BEAM
NOTE: 10" x 11 GA. FULL LENGTH "C" CHANNEL CROSSMEMBER AT FRONT AND REAR

AXLES.....3-BRAKE w/ 8:00x14.5 14 PLY TIRES

HITCH.....DETACHABLE

FASTENING REQUIREMENTS:

FLOOR JOIST TO I-BEAM....5/16" x 3" LAGS AT 16" o.c. (ALTERNATE SIDE TO SIDE OF EACH I-BEAM)

END CROSSMEMBER CONNECTION TO END RIM JOIST.... (10) 5/16" x 3" LAGS

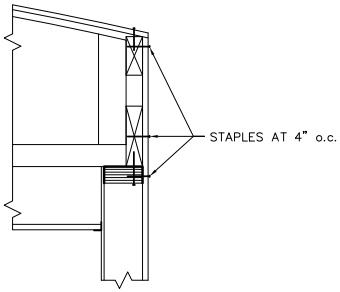

SHEAR TRANSFER DETAIL

1 1/2" = 1'-0"

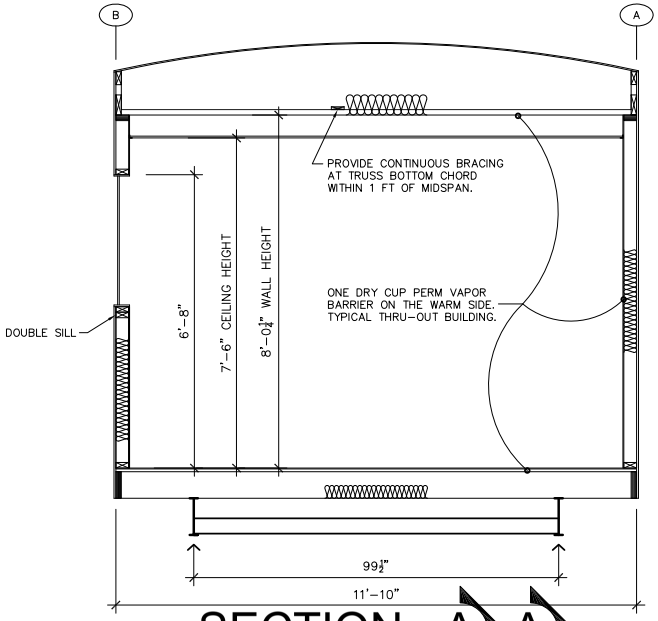

SECTION - A A

1/2" = 1'-0"

NOTE:

USE STAINLESS STEEL SCREWS ON SIDING, ROOF COVER, DOORS AND WINDOWS.

COVER WINDOWS WITH O.S.B. FOR SHIPPING.

DATE	REVISION	BY
1-5-05	ENGINEERING	LDG

COPYRIGHT 2004, BLAZER INDUSTRIES, INC. THIS MATERIAL IS THE EXCLUSIVE PROPERTY OF BLAZER INDUSTRIES, INC. AND SHALL NOT BE REPRODUCED, USED, OR DISCLOSED TO OTHERS EXCEPT AS AUTHORIZED BY THE WRITTEN PERMISSION OF BLAZER INDUSTRIES.

Blazer INDUSTRIES, INC.
P.O. BOX 489 ■ AUMSVILLE, OR 97325-0489

MOBILE
12 x 44
3rd PARTY

OFFICE for:
Lease Unit
HAWAII MODULAR SPACE

TITLE: Section
Issue Date: 1-5-05
DRAWN BY: LDG
DATE: 12-20-04
JOB NO: 12999-13001

A-2

R:\ADT3FILE\HAWAII\Stock\1244or.dwg, Plot-SEC, 01/12/2005 09:23:29 AM

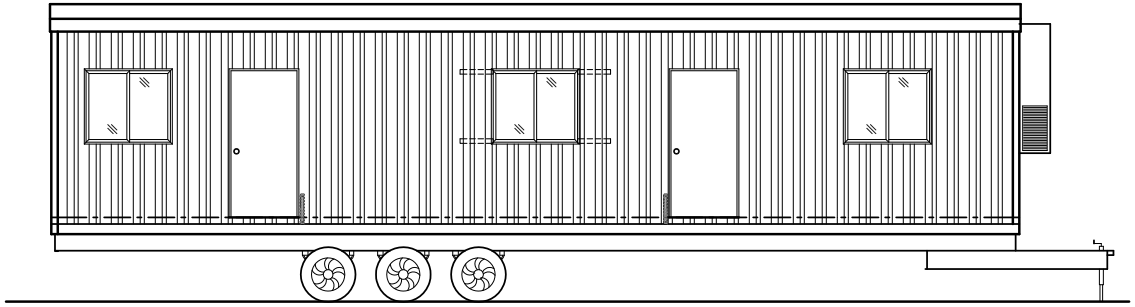

WALL "A" ELEVATION

1/4" = 1'-0"

SIDEWALL FASTENING:

1. PROVIDE BLOCKING AT WINDOW CORNERS AS SHOWN (CENTER WINDOW ON WALL "A" ONLY) AND INSTALL 1½" x 30 GA. x 24"± GALV. STRAPS w/ SIX 16 GA. x 1" WIDE CROWN STAPLES AT EACH END OF EACH STRAP.
2. USE ST2215 STRAPS WHERE SHOWN WITH EIGHT 10d x 1½" NAILS EACH END OF EACH STRAP.

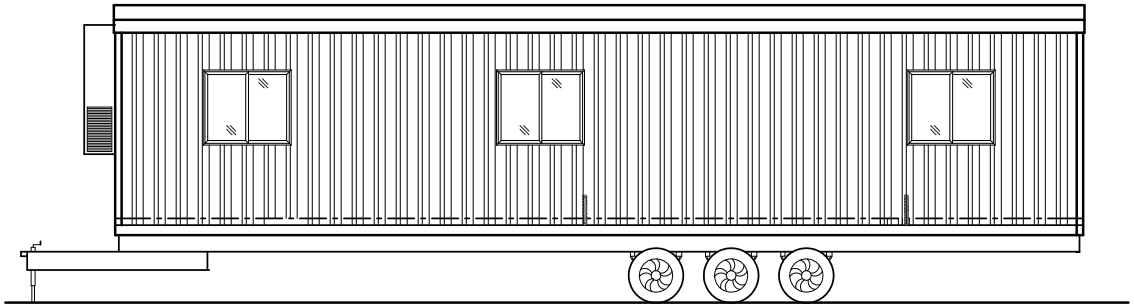

WALL "B" ELEVATION

1/4" = 1'-0"

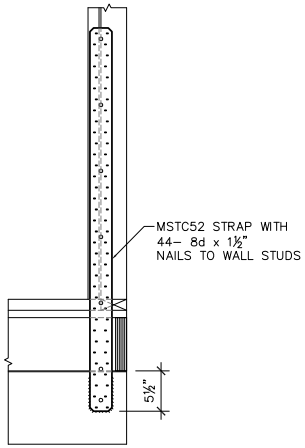

WELD STRAP WITH 5" FILLET EACH SIDE AND ALL ACROSS THE BOTTOM
OPTION: INSTALL 8– #12 TEK SCREWS.

FRONT VIEW

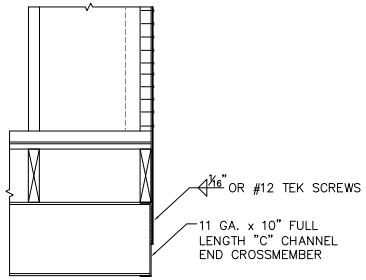

SIDE VIEW

STRAPPING DETAIL

1" = 1'-0"

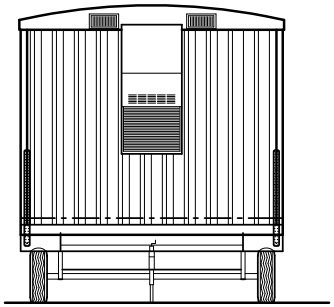

WALL "1" ELEVATION

1/4" = 1'-0"

ENDWALL FASTENING (BOTH ENDWALLS)

USE MSTC52 STRAP AT BUILDING CORNERS AT ENDWALLS (SEE STRAPPING DETAIL, THIS SHEET).

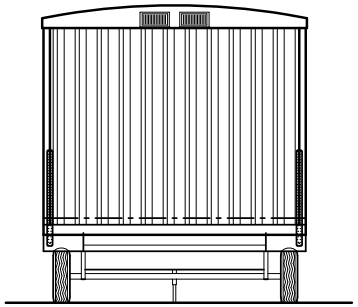

WALL "2" ELEVATION

1/4" = 1'-0"

DATE	REVISION	BY
1-5-05	ENGINEERING	LDG

COPYRIGHT 2004, BLAZER INDUSTRIES, INC. THIS MATERIAL IS THE EXCLUSIVE PROPERTY OF BLAZER INDUSTRIES, INC. AND SHALL NOT BE REPRODUCED, USED, OR DISCLOSED TO OTHERS EXCEPT AS AUTHORIZED BY THE WRITTEN PERMISSION OF BLAZER INDUSTRIES.

Blazer INDUSTRIES, INC.
P.O. BOX 489 ■ AUMSVILLE, OR 97325-0489

MOBILE
12 x 44
3rd PARTY

OFFICE for:
Lease Unit
HAWAII MODULAR SPACE

TITLE: Elevations
Issue Date: 1-5-05
DRAWN BY: LDG
DATE: 12-20-04
JOB NO: 12999-13001

A-3

R:\ADT3FILE\HAWAII\Stock\1244or.dwg, Plot-ELEV, 01/12/2005 09:23:40 AM

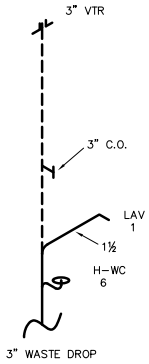

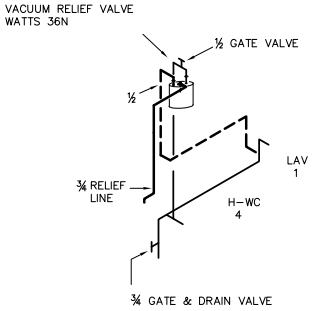

DRAINAGE AND VENT PIPING:

- FIXTURE UNITS..... 7
- SIZE OF BUILDING DRAIN..... 3"
- AGGREGATE AREA..... 7.068

GENERAL NOTES:

- D.W.V. MATERIAL – P.V.C.
- P–TRAPS ON ACCESSIBLE FIXTURES INSULATED.
- CONTINUATION OF WASTE LINE DONE ON SITE BY OTHERS

WATER PIPING:

- FIXTURE UNITS..... 5
- DEVELOPED LENGTH..... 15'
- ELEVATION DIFFERENCE..... 0'
- STREET PRESSURE..... 46 TO 60
- METER SIZE..... 3/4"
- BUILDING SUPPLY SIZE..... 3/4"

GENERAL NOTES:

- POTABLE WATER MATERIAL – COPPER
- HOT WATER LINES INSULATED WITH 1".
- ANGLE STOP AND SUPPLY ON ACCESSIBLE FIXTURES SHALL BE INSULATED.
- HAMMER ARRESTORS INSTALLED TO UPC 609.10
- CONTINUATION OF WATER MAIN DONE ON SITE BY OTHERS
- ¾ RELIEF LINE EXTENDED TO DAYLIGHT ON SITE BY OTHERS.

PLUMBING FIXTURE SCHEDULE

QTY	FIXTURE	DESCRIPTION
1	HC WATER CLOSETS–right	GERBER 21–718R
1	LAVATORY SINK–wall	GERBER–12–314
1	FAUCET–lav	A/S 2385.404
1	WATER HEATER	RUUD PEP2–1
1	VAC RELIEF VALVE 1/2	WATTS N36

PLUMBING SCHEMATICS & DATA

Job: 1244or

Drawn by Paul

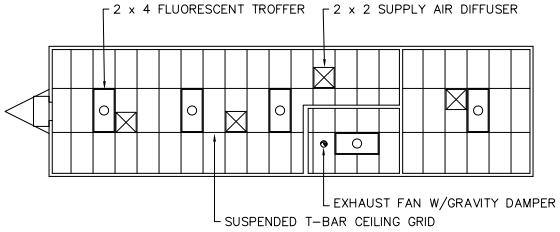

REFLECTED CEILING PLAN

1/8" = 1'–0"

MECHANICAL NOTES:

1. DUCT MATERIAL IS FLEX DUCT. DUCTWORK SHALL BE SUPPORTED PER UMC CHAPTER 6.
2. MATERIAL IN DUCTS SHALL HAVE A FLAME SPREAD INDEX OF LESS THAN 25, SMOKE DEVELOPMENT OF 50 PER UMC CHAPTER 6.
3. 8" DIFFUSERS, TYPICAL.
4. INSULATE PLENUM.
5. MINIMUM 200 CFMs OUTSIDE AIR PROVIDED.

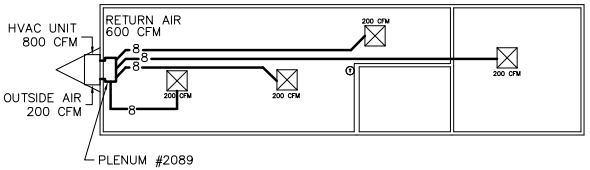

MECHANICAL PLAN

1/8" = 1'–0"

	QTY.	SIZE	DESCRIPTION
H.V.A.C.	1	2 TON	5 kW WALL HUNG
THERMOSTAT	1		BARD #8403–043

DATE	REVISION	BY

COPYRIGHT 2004, BLAZER INDUSTRIES, INC. THIS MATERIAL IS THE EXCLUSIVE PROPERTY OF BLAZER INDUSTRIES, INC. AND SHALL NOT BE REPRODUCED, USED, OR DISCLOSED TO OTHERS EXCEPT AS AUTHORIZED BY THE WRITTEN PERMISSION OF BLAZER INDUSTRIES.

Blazer INDUSTRIES, INC.
P.O. BOX 489 ■ AUMSVILLE, OR 97325-0489

MOBILE
12 x 44
3rd PARTY

OFFICE for:
Lease Unit
HAWAII MODULAR SPACE

TITLE: T-BAR & MECH.
Issue Date: 12-20-04
DRAWN BY: LDG
DATE: 12-20-04
JOB NO: 12999-13001

M-1

R:\ADT3FILE\HAWAII\Stock\1244or.dwg, Plot-MECH, 01/12/2005 09:23:51 AM

H.V.A.C. (MOTOR, COMPRESSOR, HEATER SIZES)		
OPERATION VOLTAGE	197 MIN.	253 MAX.
COMPRESSOR	9.5 RLA	56 LRA
INDOOR BLOWER FAN	1.2 FLA	1/5 H.P.
OUTDOOR BLOWER FAN	1.0 FLA	1/6 H.P.
HEAT STRIP	5 KVA	
MINIMUM CIRCUIT AMPS		**28 AMPS**
MAXIMUM OVERCURRENT PROTECTION		**30 AMPS**
OVERCURRENT PROTECTION– DUAL ELEMENT TIME DELAY FUSE OR HACR CIRCUIT BREAKER		

PANEL SCHEDULE

NOTE: ALL CONDUCTORS COPPER. 100 AMP PANEL SINGLE PHASE

CKT NO.	DESCRIPTION	TRIP AMPS	WIRE SIZE	VOLT AMPS	A	B	VOLT AMPS	WIRE SIZE	TRIP AMPS	DESCRIPTION	CKT NO.
1	LIGHTS	15	14	633			2500	10	30	HVAC	2
3	OUTLETS	15	14	720			2500	/	/	/	4
5	OUTLETS	15	14	900							6
7	WATER HEATER	15	14	1440							8
9											10
11											12
13											14
15											16
17											18
19											20
21											22
23											24

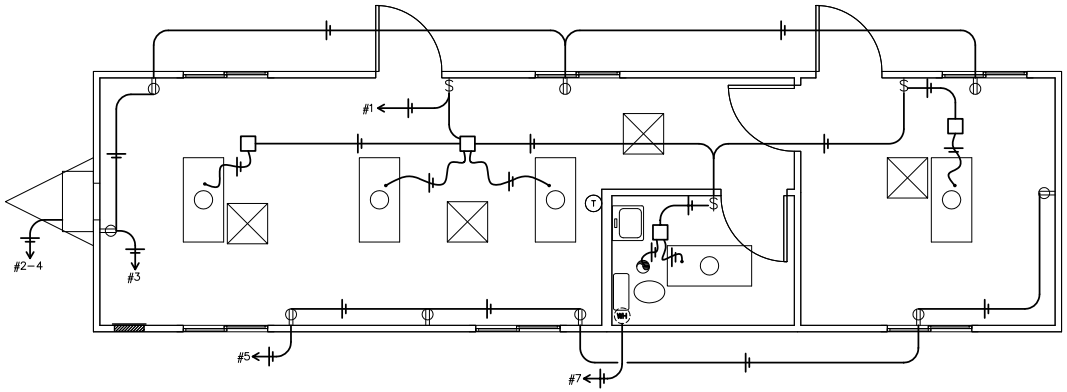

ELECTRICAL PLAN

1/4" = 1'-0"

ELECTRICAL PLAN REVIEW LOAD CALCULATIONS

VOLTAGE: 120/240 PHASE: 1 Ø

	CONNECTED LOAD				CALC. LOAD
LIGHTING					
EXTERIOR		V.A.	X 125 %	=	V.A.
INTERIOR	465	V.A.	X 125 %	=	581 V.A.
EXIT		V.A.	X 125 %	=	V.A.
EMERGENCY		V.A.	X 125 %	=	V.A.
TIME CLOCK		V.A.	X 125 %	=	V.A.
EXHAUST FANS	168	V.A.	X 125 %	=	210 V.A.
RECEPTACLES					
THRU 10,000	1620	V.A.	X 100 %	=	1620 V.A.
OVER 10,000		V.A.	X 50 %	=	V.A.
MOTORS, COMPR.					
TOTAL	288	V.A.	X 100 %	=	288 V.A.
LARGEST	(288)	V.A.	X 25 %	=	72 V.A.
HEATING	5000	V.A.	X 100 %	=	5000 V.A.
WATER HEATER	1440	V.A.	X 100 %	=	1440 V.A.
		V.A.	X 125 %	=	V.A.
		V.A.	X 100 %	=	V.A.
		V.A.	X %	=	V.A.
		V.A.	X %	=	V.A.
		V.A.	X %	=	V.A.
TOTAL CONNECTED LOAD **KVA**	**9.0**		**TOTAL** CALCULATED LOAD **KVA**		**9.2**
AMPS	**37.4**		**AMPS**		**38.4**

	QTY.	SIZE	DESCRIPTION
H.V.A.C.	1	2 TON	5 kW WALL HUNG
THERMOSTAT	1		BARD #8403-043
ELECTRICAL PANEL	1	100 AMP	SINGLE PHASE– SERVICE UNDER– CONDUIT
LIGHTING	5	2 x 4	TROFFER 3 T-8 TUBES w/ ELECTRONIC BALLAST
EXHAUST FAN	1	110 cfm	IN RESTROOM
WATER HEATER	1	2.5 GAL.	IN RESTROOM ABOVE TOILET

ONE-LINE-DIAGRAM

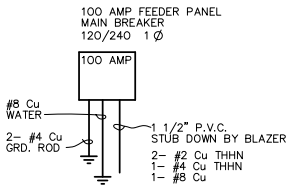

NOTES:

1. WHEN STRANDED WIRE IS USED ALL TERMINATIONS ARE MADE BY A PRESSURE TERMINAL BY TAILING OFF WITH SOLID CONDUCTORS OF OTHER APPROVED MEANS OF TERMINATION.
2. ALL CONDUCTORS ARE COPPER; TYPE THHN.
3. RATING OF STANDARD PANEL IS 22,000 A.I.C.
4. WIRING METHOD IS METALLIC CONDUIT OR MC CABLE.

ELECTRICAL SYMBOLS

SYMBOL	DESCRIPTION	HEIGHT TO TOP	REMARKS
	SINGLE POLE SWITCH	48"	1440 V.A. MAX. LIMIT PER SWITCH
	DUPLEX RECEPT.	20"	180 V.A. EACH
T	THERMOSTAT	48"	TO TOP OF J-BOX
	EXHAUST FAN 110 cfm	CEILING	168 V.A. EACH
WH	2.5 GAL. WATER HEATER	66" BOTTOM	1440 V.A. EACH
	24" x 48" TROFFER	CEILING	3 T-8 TUBE ELECT. BALLAST 93 V.A. EACH FIXTURE
	POWER PANEL	72"	

DATE	REVISION	BY

COPYRIGHT 2004, BLAZER INDUSTRIES, INC. THIS MATERIAL IS THE EXCLUSIVE PROPERTY OF BLAZER INDUSTRIES, INC. AND SHALL NOT BE REPRODUCED, USED, OR DISCLOSED TO OTHERS EXCEPT AS AUTHORIZED BY THE WRITTEN PERMISSION OF BLAZER INDUSTRIES.

Blazer INDUSTRIES, INC.
P.O. BOX 489 ■ AUMSVILLE, OR 97325-0489

MOBILE
12 x 44
3rd PARTY

OFFICE for:
Lease Unit
HAWAII MODULAR SPACE

TITLE:	Electrical Plan
Issue Date:	12-20-04
DRAWN BY:	LDG
DATE:	12-20-04
JOB NO:	12999-13001

E-1

R:\ADT3FILE\HAWAII\Stock\1244or.dwg, Plot-ELEC, 01/12/2005 09:24:04 AM

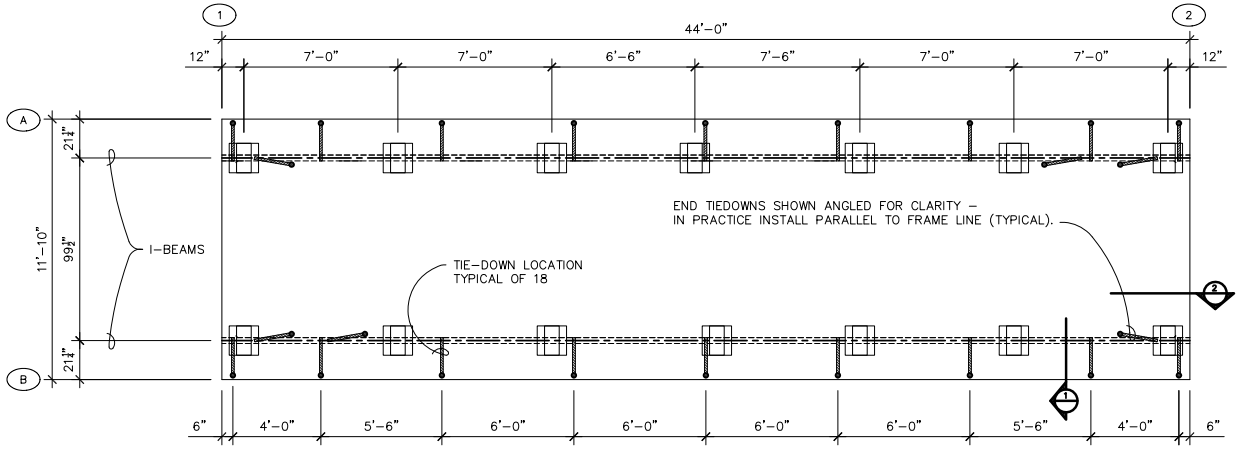

FOUNDATION PLAN

1/4" = 1'-0"

GENERAL NOTES:

1. FOUNDATION SYSTEM IS ENGINEERED ONLY FOR USE WITH RELOCATABLE BUILDINGS MANUFACTURED BY BLAZER INDUSTRIES, INC.
2. BUILDING DESIGN LOADS ARE AS FOLLOWS:
   ROOF.....20 P.S.F.
   WIND.....80 M.P.H. EXPOSURE "D"
   FLOOR.....50 P.S.F. or 2000 LB.
   SEISMIC.....ZONE 4
   SOIL BEARING.....2500 P.S.F. ASSUMED
3. SOIL BEARING CAPACITY TO BE AS REQUIRED BY LOCAL AUTHORITY. LOCAL AUTHORITY TO DETERMINE ACCEPTIBILITY OF FOOTINGS INSTALLED ON GROUND SURFACE.
4. CONCRETE MASONRY UNIT (C.M.U.) MINIMUM NET COMPRESSIVE STRENGTH – 1350 P.S.I.
5. WOOD:
   – ALL WOOD SHALL BE H.F., D.F., or S.P.F.
   – ALL P.T. WOOD SHALL BE MARKED "SUITABLE FOR GROUND CONTACT."
   – 2 x 12 x 24" P.T. WOOD FOOTINGS TO BE CUT TO LENGTH BEFORE PRESSURE TREATING.
6. MINIMUM CLEARANCE FROM BOTTOM OF I-BEAM TO GROUND TO BE 18".
7. TIE-DOWN ANCHORS:
   – USE ANCHORS, STRAPS AND CONNECTORS WHICH INDIVIDUALLY HAVE MINIMUM ULTIMATE CAPACITY OF 4725 LB. AND MINIMUM INSTALLED WORKING CAPACITY OF 3150 LB.
   – ANCHOR STRAPS SHALL BE ATTACHED TO I-BEAM FRAME USING CERTIFIED GALVANIZED STRAPPING PROVIDED BY THE TIE-DOWN MANUFACTURER.
   – INSTALL ANCHORS PER MANUFACTURER'S INSTRUCTIONS.
   – ANCHORS MUST BE PERIODICALLY TIGHTENED TO ASSURE CORRECT TENSION.
8. BLOCKING IS ALSO REQUIRED AT BOTH SIDES OF A DOOR OPENING IN AN EXTERIOR WALL THAT IS SIX FEET OR MORE WIDE.

CONSTRUCTION NOTES:

1. FOOTINGS:
   – AREA UNDER FOOTINGS TO BE FREE OF ORGANIC MATERIAL (IE. GRASS, WOOD DEBRIS).
   – ALL LOOSE OR DISTURBED MATERIAL TO BE REMOVED AND REPLACED WITH SAND OR CRUSHED ROCK (¾ MINUS) COMPACTED TO REQUIRED SOIL BEARING PRESSURE.
   – (1) 2" x 12" x 24" P.T. PAD OR (1) 16" x 16" x 4" SOLID CONCRETE BLOCK OR (2) 8" x 16" x 4" SOLID CONCRETE BLOCK LAID WITH JOINT PARALLEL TO I-BEAM.
2. PIER BLOCKS:
   – BLOCKS SHALL BE 8 x 8 x 16" CONCRETE MASONRY UNITS.
   – ALL BLOCKS SHALL BE SET WITH CORES PLACED VERTICALLY.
   – A SINGLE STACK SHALL BE INSTALLED AT RIGHT ANGLES TO I-BEAM.
   – HEIGHT OF STACK SHALL NOT EXCEED THREE BLOCKS.
   STEEL JACKS:
   – APPROVED STEEL JACK STANDS MAY BE USED IN PLACE OF CONCRETE PIER BLOCKS.
   – ALL JACK STANDS MUST HAVE A TOP THAT LOCKS ONTO I-BEAM & THE THREADED ROD.
   – ATTACHMENT OF JACK STAND TO P.T. FOOTING PAD IS REQUIRED.
3. PIER CAPS:
   – PIER CAPS SHALL BE INSTALLED AT RIGHT ANGLES TO I-BEAM.
   – CAP SHALL BE ON 8 x 16 x 4" SOLID CONCRETE BLOCK OR NO MORE THAN TWO 2 x 8 x 16" WOOD BLOCKS.
4. PIER PLATE AND SHIMS:
   – ONE WOOD PLATE THAT IS NOT MORE THAN 2 INCHES THICK MAY BY USED ON TOP OF PIER CAP.
   – TWO OPPOSING WEDGE-SHAPED WOOD SHIMS AT LEAST 3½" SIDE, 10" MINIMUM LONG, AND NOT MORE THAN 1½" THICK WILL BE USED TO INSURE THE UNIT IS LEVEL AND PROPERLY SUPPORTED AT ALL LOAD BEARING POINTS.

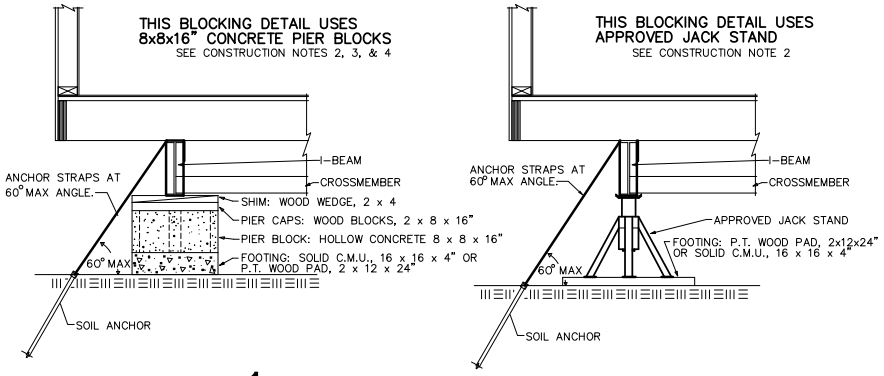

1 BLOCKING AND TIE-DOWN DETAILS
3/4" = 1'-0"

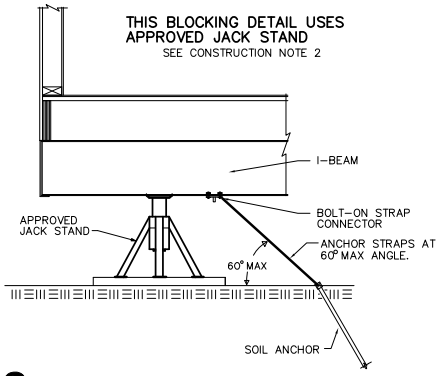

2 ENDWALL TIE-DOWN DETAIL
3/4" = 1'-0"

DATE	REVISION	BY
1-5-05	ENGINEERING	LDG

COPYRIGHT 2004, BLAZER INDUSTRIES, INC.
THIS MATERIAL IS THE EXCLUSIVE PROPERTY OF BLAZER INDUSTRIES, INC. AND SHALL NOT BE REPRODUCED, USED, OR DISCLOSED TO OTHERS EXCEPT AS AUTHORIZED BY THE WRITTEN PERMISSION OF BLAZER INDUSTRIES.

Blazer INDUSTRIES, INC.
P.O. BOX 489 ■ AUMSVILLE, OR 97325-0489

MOBILE
12 x 44
3rd PARTY

OFFICE for:
Lease Unit
HAWAII MODULAR SPACE

TITLE:	Foundation Plan
Issue Date:	1-5-05
DRAWN BY:	LDG
DATE:	12-20-04
JOB NO:	12999-1300

S-1

R:\ADT3FILE\HAWAII\Stock\1244or.dwg, Plot-FNDN, 01/12/2005 09:24:17 AM

1) RAMP SHALL HAVE A RUNNING SLOPE NOT STEEPER THAN 1/12 (8% SLOPE) AND SHALL BE FITTED WITH A SLIP RESISTANT WALKING SURFACE SECURELY ATTACHED TO STRUCTURE.

2) THE MAXIMUM VERTICAL RISE OF RAMP RUN SHALL BE 30" (762MM) MAXIMUM

3) THE SLOPE PERPENDICULAR TO THE DIRECTION OF TRAVEL AND THE SLOPE ON LANDINGS SHALL NOT BE STEEPER THAN ONE UNIT VERTICAL IN 48 UNITS HORIZONTAL

4) WHEN CHANGES IN DIRECTION OF TRAVEL OCCUR AT LANDINGS BETWEEN RAMP RUNS, THE LANDING SHALL BE 60" x 60" (1524MM x 1524MM) MINIMUM

5) MANEUVERING CLEARANCE ON PULL SIDE OF DOOR SHALL BE 18" (457MM) ON INTERIOR AND 24" (610MM) EXTERIOR WITH 60" (1524MM) LANDING IN FRONT OF DOOR

6) HANDRAILS SHALL BE CONTINUOUS ALONG BOTH SIDES. HANDRAILS SHALL BE PARALLEL WITH THE SURFACE AND PROJECT 12"

7) TOP OF HANDRAILS SHALL BE MOUNTED BETWEEN 34" AND 38" (864MM AND 965MM) ABOVE THE SURFACE

8) CLEARANCE BETWEEN RAIL AND WALL SHALL BE 11/2" (38.1MM)

9) BALUSTERS ARE INDEPENDENTLY DESIGNED FOR A CONCENTRATE LOAD OF 200# (0.9kN) APPLIED TO ONE SQUARE FOOT OF AREA

10) STEPS, RAMPS AND PLATFORMS SHALL BE DESIGNED FOR 100 PSF (4.8 kPA) LIVE LOAD

11) DOUBLE-RAIL HANDRAIL AVAILABLE WHERE CODE REQUIRES

12) SUBMIT SHOP DRAWINGS FOR APPROVAL

1 RAMP NOTES

SCALE: NTS

1) MANEUVERING CLEARANCE ON PULL SIDE OF DOOR SHALL BE 18" (457MM) ON INTERIOR AND 24" (610MM) EXTERIOR WITH 60" (1524MM) LANDING IN FRONT OF DOOR

2) HANDRAILS SHALL BE CONTINUOUS ALONG BOTH SIDES. HANDRAILS SHALL BE PARALLEL WITH THE SURFACE AND PROJECT 12" (301MM) ON TOP OF RISER AND 12" (301MM) PLUS 1 TREAD AT BOTTOM RISER.AT RAMPS WHERE HANDRAIL ARE NOT CONTINUOUS BETWEEN RUNS THE HANDRAIL SHALL EXTEND HORIZONTALLY ABOVE THE LANDING 12" (301MM) MINIMUM BEYOND TOP AND BOTTOM RAMPS

3) TOP OF HANDRAILS SHALL BE MOUNTED BETWEEN 34" (864MM) AND 38" (965MM) ABOVE THE WALKING SURFACE.

4) CLEARANCE BETWEEN RAIL AND WALL SHALL BE A MINIMUM OF 1-1/2" (38MM).

5) GUARD RAILS SHALL TO BE DESIGNED FOR A CONCENTRATED LOAD OF 200# (0.9kN) APPLIED @ ANY POINT AND ANY DIRECTION ALONG THE RAIL OR A UNIFORM LOAD OF 50#/L. F. (0.7kN/m) APPLIED HORIZONTALLY TO THE GUARD HEIGHT

6) BALUSTERS ARE INDEPENDENTLY DESIGNED FOR A CONCENTRATED LOAD OF 200 LBF (0.9 kN) APPLIED TO ONE SQUARE FOOT OF AREA.

7) HANDRAILS SHALL HAVE A CIRCULAR CROSS SECTION WITH AN OUTSIDE DIAMETER OF 1-1/4" (31.75MM) MINIMUM AND NOT GREATER THAN 2" (50MM) MAXIMUM.

8) GRIPPING SURFACE SHALL BE UNINTERRUPTED BY POSTS OR OTHER CONSTRUCTION ELEMENTS OR OBSTRUCTIONS.

9) HANDRAILS SHALL NOT ROTATE IN THEIR FITTINGS.

10) ENDS OF HANDRAILS SHALL RETURN SMOOTHLY TO FLOOR, WALL OR POST.

This certification is for the stairs and ramps and does not represent professional-of-record for any buildings.

2 RAILING NOTES

SCALE: NTS

Hawaii Modular Space

REFERENCE: IBC 2006

DESIGN LOADS:

LIVE LOAD:	100 PSF (4.8 kPa)
HANDRAIL IMPACT:	200 LBS (0.9 kN)
HANDRAIL DIST. LOAD:	50 PLF (0.7 kN/m)
SNOW LOAD:	100 PSF (4.8 kPa)
ALLOWABLE SOIL BEARING:	1,000 PSF (47.9 kPa)

MATERIALS

ROUND STEEL TUBE	ASTM A847	Fy= 50 KSI (345 MPa)
GALVANIZED SQUARE STEEL TUBE	ASTM A500 GR. C	Fy= 50 KSI (345 MPa)
ALUMINUM SHEET	3003-H22	Ftu= 27 KSI (185 MPa); Fcy= 21 KSI (114 MPa)
ALUMINUM TUBE	5052-H34	Ftu= 34 KSI (235 MPa); Fcy= 24 KSI (165 MPa)

WELDS
WELDING SHALL BE IN ACCORDANCE WITH AWS D.1.1-04 USING E70XX ELECTRODES FOR STEEL AND AWS A5.10 FOR ALUMINUM, USING ALMIGWELD ER4043

ALUMINUM- STEEL CONNECTIONS: CARBON STEEL BOLTS SHALL BE GRADE 5 ZINC PLATED, HOT DIPPED GALVANIZED TO ASTM A153 OR ELECTROGALVANIZED TO ASTM B63.3
A490 BOLTS SHALL NOT BE USED.
FASTENER SHALL BE LUBRICATED TO ELIMINATE GALLING
ALL STEEL MEMBERS IN CONTACT WITH ALUMINUM SHALL BE ZINC COATED AND DEBURRED TO ELIMINATE GALVANIC REACTION

3 STRUCTURAL NOTES

SCALE: NTS

R&S TAVARES ASSOCIATES
DESIGN CONSULTING PROJECT MGT
9815 CARROLL CANYON RD, SUITE 205
SAN DIEGO, CA 92131 858.444.3344
3324 SANTA FE ST, SUITE A
RIVERSIDE, CA 92507 909.863.8928
WWW.RSTAVARES.COM

THE PLANS, IDEAS & DESIGNS SHOWN ON THESE DRAWINGS ARE THE PROPERTY OF R & S TAVARES ASSOCIATES, DEVISED SOLELY FOR THIS CONTRACT. THESE PLANS SHALL NOT BE USED, IN WHOLE OR IN PART, FOR ANY PURPOSE FOR WHICH THEY WERE NOT INTENDED WITHOUT THE EXPRESS WRITTEN CONSENT OF R & S TAVARES ASSOCIATES ©

REVISION

PROFESSIONAL STAMP

EVOR F. JOHNS
LICENSED PROFESSIONAL ENGINEER
PE-14577-C
07/25/2015
HAWAII U.S.A.
Expires: 04/30/16

PROJECT TITLE

30' RAMP w/ SWITCHBACK ADAWSB30

SHEET TITLE

NOTES

PROJECT NUMBER 14000

DRAWN BY ST | CHECKED BY RT

DATE 7/2/2015

SHEET NO. A1.0

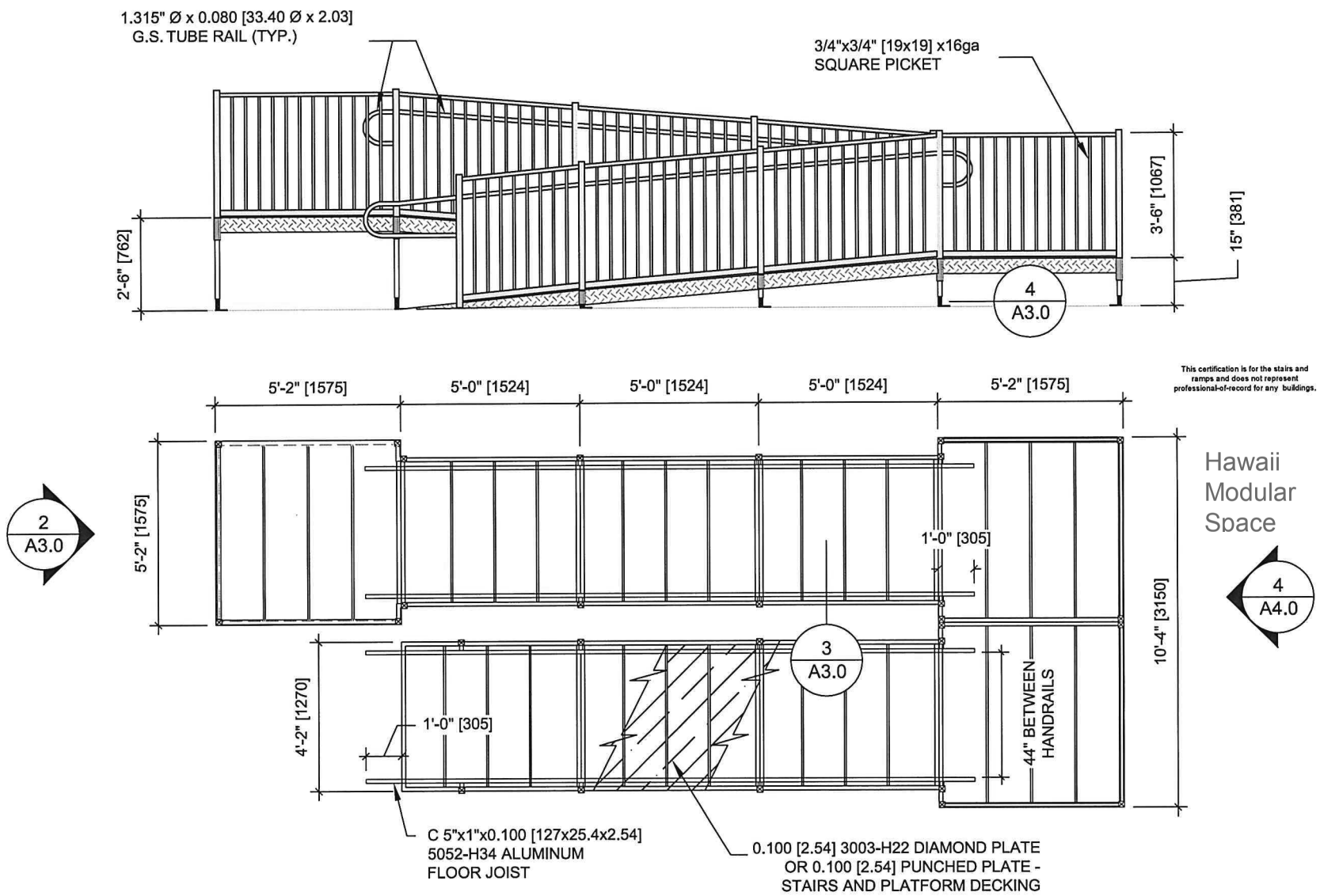

This certification is for the stairs and ramps and does not represent professional-of-record for any buildings.

Hawaii Modular Space

1 RAMP FLOOR PLAN AND SIDE VIEW

SCALE: 3/8"=1'-0"

R&S TAVARES ASSOCIATES
DESIGN&CONSULTING&PROJECT MGT
9815 CARROLL CANYON RD. SUITE 206
SAN DIEGO, CA 92131 858.444.3344
3324 SANTA FE ST. SUITE A
RIVERSIDE, CA 92507 909.863.8938
WWW.RSTAVARES.COM

THE PLANS, IDEAS & DESIGNS SHOWN ON THESE DRAWINGS ARE THE PROPERTY OF R & S TAVARES ASSOCIATES, DEVISED SOLELY FOR THIS CONTRACT. THESE PLANS SHALL NOT BE USED, IN WHOLE OR IN PART, FOR ANY PURPOSE FOR WHICH THEY WERE NOT INTENDED WITHOUT THE EXPRESS WRITTEN CONSENT OF R & S TAVARES ASSOCIATES ©

REVISION

PROFESSIONAL STAMP

EVOR F. JOHNS
LICENSED PROFESSIONAL ENGINEER
PE-14577-C
07/25/2015
HAWAII, U.S.A.
Expires: 04/30/16

PROJECT TITLE

30' RAMP w/ SWITCHBACK ADAWSB30

SHEET TITLE

RAMP PLAN & DETAILS

PROJECT NUMBER 14000

DRAWN BY ST | CHECKED BY RT

DATE 7/2/2015

SHEET NO. A2.0

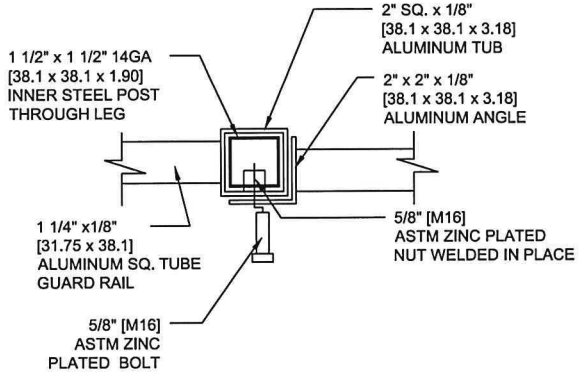

1 RAILING CONNECTION TOP VIEW

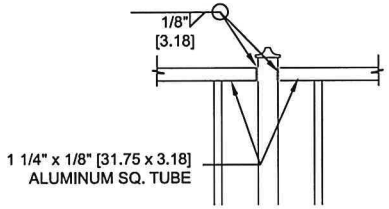

2 RAILING CONNECTION SIDE VIEW

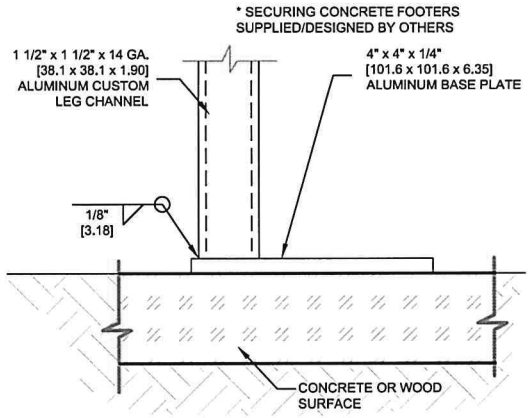

3 TYP.FOOTING DETAIL

This certification is for the stairs and ramps and does not represent professional-of-record for any buildings.

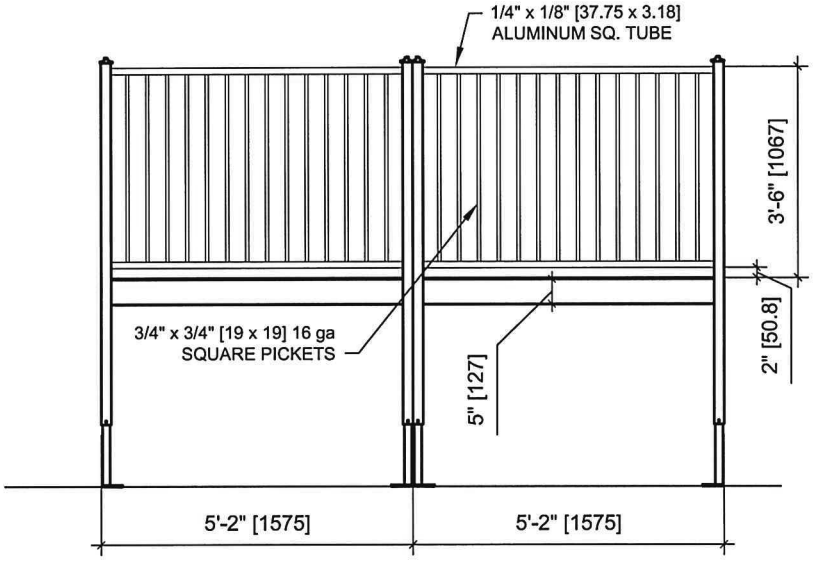

4 RAMP LANDING RAIL

SCALE: 1/2"=1'-0"

Hawaii
Modular
Space

R&S TAVARES ASSOCIATES
DESIGN@GUNBULTING@PROJECT MGT
9815 CARROLL CANYON RD. SUITE 206
SAN DIEGO, CA 92131 858.444.3344
3324 SANTA FE ST. SUITE A
RIVERSIDE, CA 92507 909.863.8938
WWW.RSTAVARES.COM

THE PLANS, IDEAS & DESIGNS SHOWN ON THESE DRAWINGS ARE THE PROPERTY OF R & S TAVARES ASSOCIATES, DEVISED SOLELY FOR THIS CONTRACT. THESE PLANS SHALL NOT BE USED, IN WHOLE OR IN PART, FOR ANY PURPOSE FOR WHICH THEY WERE NOT INTENDED WITHOUT THE EXPRESS WRITTEN CONSENT OF R & S TAVARES ASSOCIATES ©

REVISION

PROFESSIONAL STAMP

EVOR F. JOHNS
LICENSED PROFESSIONAL ENGINEER
PE-14577-C
07/25/2015
HAWAII U.S.A.
Expires: 04/30/16

PROJECT TITLE

30' RAMP w/ SWITCHBACK
ADAWSB30

SHEET TITLE

DETAILS

PROJECT NUMBER
14000

DRAWN BY	CHECKED BY
ST	RT

DATE
7/2/2015

SHEET NO.
A4.0

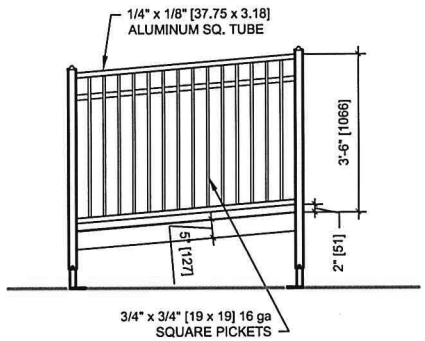

1 RAMP SIDE RAIL — SCALE: 1/4"=1'-0"

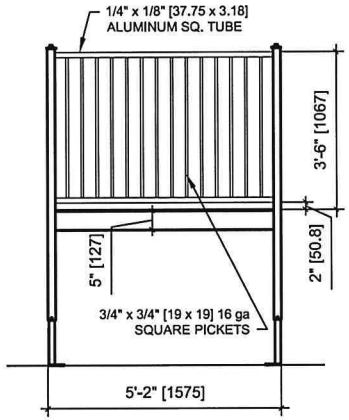

2 RAMP LANDING RAIL — SCALE: 1/4"=1'-0"

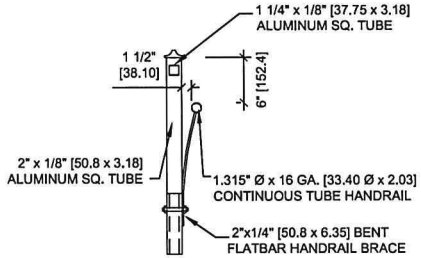

This certification is for the stairs and ramps and does not represent professional-of-record for any buildings.

3 HANDRAIL DETAIL — SCALE: 3/4"=1'-0"

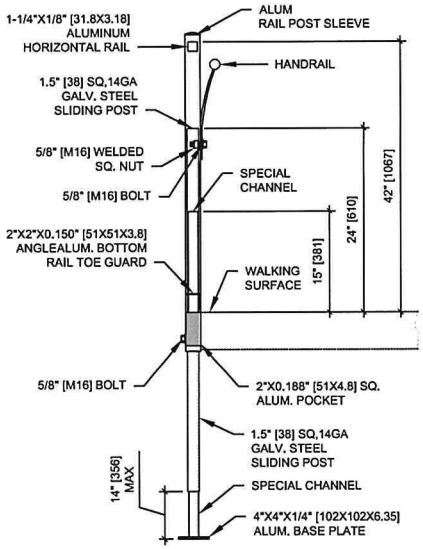

3 POST DETAIL — SCALE: 1/4"=1'-0"

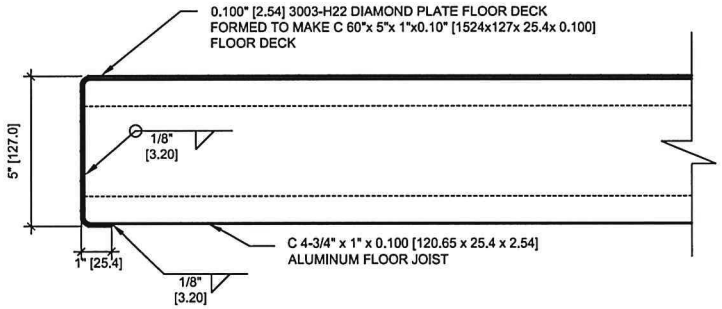

4 DECK CONNECTION — SCALE: 3"=1'-0"

R&S TAVARES ASSOCIATES
DESIGN•CONSULTING•PROJECT MGT
9815 CARROLL CANYON RD. SUITE 206
SAN DIEGO, CA 92131 858.444.3344
3324 SANTA FE ST. SUITE A
RIVERSIDE, CA 92507 909.863.8928
WWW.RSTAVARES.COM

THE PLANS, IDEAS & DESIGNS SHOWN ON THESE DRAWINGS ARE THE PROPERTY OF R & S TAVARES ASSOCIATES, DEVISED SOLELY FOR THIS CONTRACT. THESE PLANS SHALL NOT BE USED, IN WHOLE OR IN PART, FOR ANY PURPOSE FOR WHICH THEY WERE NOT INTENDED WITHOUT THE EXPRESS WRITTEN CONSENT OF R & S TAVARES ASSOCIATES ©

REVISION

PROFESSIONAL STAMP

EVOR F. JOHNS
LICENSED PROFESSIONAL ENGINEER
PE-14577-C
07/25/2015
HAWAII U.S.A.
Expires: 04/30/16

PROJECT TITLE

30' RAMP w/ SWITCHBACK ADAWSB30

SHEET TITLE

RAMP PLAN & DETAILS

PROJECT NUMBER 14000

DRAWN BY ST | CHECKED BY RT

DATE 7/2/2015

SHEET NO. A3.0

SECTION 13210 – FACTORY POWDER COATED BOLTED STEEL TANK

PART 1 – GENERAL

1.1 SUMMARY

A. This specification covers the furnishing of all labor, material, equipment, tools, services and erection of a Factory Powder Coated Bolted Steel water storage tank, as manufactured by Superior Tank Co., Inc., Rancho Cucamonga, CA and as shown on the plans and specified herein or equal.

B. The bolted steel tank shall conform to the requirements of American Water Works Association (AWWA) D103-09 Standard for Factory-Coated Bolted Carbon Steel Tanks for Water Storage.

C. The Contractor shall coordinate the method of securing all pipe supports and aeration supports to the tank with the Tank Manufacturer.

D. Two tank shall be supplied with the project one will be used for the aerobic digester and the other will be a covered reservoir for R-1 water storage.

1.2 SUBMITTALS

A. Shop Drawings: Submit shop drawings of the bolted steel reservoir and all accessories for review and approval by the engineer prior to beginning any related shop fabrication or erection. Include sufficient data to show that the reservoir and accessories conform to the requirements to these Specifications.

Submittals shall include:

1. Design calculations for foundation and steel tank, signed by a civil or structural engineer registered in the State of Hawaii.

2. Fabrication and erection drawings and details for the reservoir, stairway and all accessories.

3. Certified mill tests on steel plate and structural members demonstrating that the physical and chemical requirements of this Specification have been met.

4. Details of all pipe and aeration supports.

PART 2 - PRODUCTS

2.1 GENERAL DESCRIPTION

A. The Manufacturer shall furnish, erect and test the tank, as required by AWWA.D103-09. The Manufacturer shall be completely responsible for the construction and satisfactory performance of the tank during the guarantee period. The tank shall conform to AWWA 0103-09, to the latest edition Building Code, and

to the requirements of the plans and these Specifications. The supplier shall submit for approval complete and detailed plans for the tank and appurtenances.

B. Provide the reservoir complete with all pipe connections, access openings, nozzles. taps, drains, ladders, vent, and other accessories as shown on the plans or required herein.

2.2 DESIGN DATA

A. The following data and information are supplied as a basis for design and erection of the tank and appurtenances:

1.

Tank Capacity & Dimensions		Aerobic Digester	R-1 Reservoir
a.	Nominal Capacity, gal	62,792	151,982
b.	Usable Capacity, gal	58,890	148,191
c.	Inside Diameter, ft	25.78	40.10
d.	Tank Height, ft	16.0	16.0

2. Seismic Design Criteria (2012 IBC, ASCE 7-10)

a.	Seismic Design Category	D
b.	Risk Category	III
c.	Seismic Importance Factor, I_E	1.25
d.	Soil Site Class	C
e.	S_s	0.977g
f.	S_1	0.251g
g.	F_a	1.009
h.	F_v	1.549

3. Design Wind Loading (2012 IBC, ASCE 7-10)

a.	Basic Wind Speed, V	145 mph
b.	Gust Factor, G	0.85
c.	Topographic Factor, Kzt	1.10
d.	Risk Category	III
e.	Exposure Category	C

4. Roof Design Loading

a.	Roof Live Load	20 psf

5. Liquid to be stored

a.	Aerobic Digester	Digested Sludge
b.	R-1 Water Reservoir	Reclaimed wastewater

2.3 MATERIALS

A. Plates and Sheets. Plates and sheets shall conform to appropriate ASTM designation as set forth in Section 4.4, AWWA D103-09, and shall have a minimum yield strength of 30,000 psi.

B. Structural Shapes. Structural shapes shall conform to the requirements and ASTM designations of AWWA D103-09 section 4.5

C. Bolts. Tank joint bolting shall be minimum ½" diameter, shall meet the requirements of AWWA D103-09 section 4.2.1. and have tensile strength of at least 120,000 pounds per square inch.

D. Gaskets and Sealant. All gaskets and sealants used on this tank shall conform to the requirements of AWWA D103-09 section 4.10.

2.4 ACCESSORIES

A. Shell Manhole: Provide a 24", minimum, hinged shell manhole located as shown on the drawings. The center of the manhole shall be located 30 inches above the bottom of the tank.

B. Pipe Connections:

1. Provide tank penetrations and sizes as shown on the drawings

C. Ladders and Stairs:

1. Provide a galvanized steel welded exterior ladder with backguard as shown on the plans for the R-1 water reservoir. The ladder shall have a lockable closure at the bottom.

2. Provide a galvanized steel stairway for the aerobic digester as shown on the drawings.

D. Roof Openings for R-1 Water Reservoir

1. A 20 inch screened vent shall be provided on the roof. The vent shall be fabricated to provide removable screened openings between the vertical support members of the vent. The screened openings of the vent shall be sized by the manufacturer to all venting of a 3,000 gpm pumping rate. An effective area of 75% of screen opening shall be assumed. The screen shall consist of one layer of Type 316 stainless steel: 16 x 16 x 0.018 wire mesh insect screen.

2. The tank roof shall have a curbed, upward opening 24-inches square, minimum hatch located near the ladder. The curb shell extend at least 4 inches above the tank. The hatch cover shall be hinged and shall have locking provisions. The hatch cover lip shall extend for a distance of 2-inches down on the outside of the curb.

E. Provide a Superior Tank Model # 2400, Liquid Level Indicator with Type 316 stainless steel internals and complete with float and target board assembly for both tanks.

F. Gaskets and sealants shall meet or exceed AWWA, FDA, and EPA standards for potable water.

G. Anchor bolts and stirrups, if required, to be furnished by the tank manufacturer.

PART 3 - EXECUTION

3.1 PROTECTIVE COATING

A. General: All metal plates, supports, members and miscellaneous parts, except bolts, shall be Factory Powder Coated in accordance with AWWA D103, Section 12.6 and this Section. Field coating, other than touch-up, will not be permitted.

B. Surface Preparation:

1. All steel surfaces shall be shot blasted to equivalent of a SP 10 or better near white metal finish. The surface anchor pattern shall be no less than 1.5 mils.

2. Spray a final Deionized water rinse with Silica-Zirconium (Si-Zr) sealer to prevent rusting prior to the powder coating application and provide additional level of corrosion protection

3. All steel surfaces shall drip dry for seven (7) minutes prior to entering the dry off oven for eight (8) minutes at 425 degrees F.

C. Coating:

1. All interior steel surfaces, support members and miscellaneous parts shall receive 5 mils minimum average dry film thickness using *Dupont/Axalta* "Tank Tan" (An NSF 61 Approved, Thermal Set Epoxy Powder Coating).

2. All exterior steel surfaces, support members and miscellaneous parts shall receive minimum 2 mils average dry film thickness “Tank Tan” primer under 3 mils minimum average dry film thickness using *Dupont* "Superior Sand" (A Thermal Set TGIC-Polyester Powder Coating), for a total of 5 mils.

3. NOTE: Painted, uncoated, or glass lined bolted tanks and FRP tanks are not considered equal

3.1 CONSTRUCTION

A. Field erection of Factory Powder Coated bolted steel tanks shall be in strict compliance with manufacturer's recommendations and performed by manufacturer's employees or certified erection crew to alleviate any potential disputes in coating quality or erection thereof. Particular care shall be exercised in handling and bolting of the tank plates, supports, and members to avoid abrasion or scratching the coating. Prior to placing water in the tank, a "holiday" inspection of the entire tank, corners included, will be provided and performed by the manufacturer in the presence of the owner. Touch-up coating shall be done per

the manufacturer's recommendations where needed and as directed to achieve 100% holiday-free surface.

3.3 TESTING AND INSPECTION

A. General: Test storage tank after erection. Floor shall be clean and free from dirt, foreign substance and debris.

B. Bottom: Vacuum test seams in floor plates.

C. Shell: Test by filling with water to elevation of overflow. Completed storage tank shall show no leaks at end of 24 hour test period. No charge will be made for water required to fill tank.

3.4 WARRANTY

A. The tank manufacturer, shall warrant the tank against any defects in workmanship and materials for a period of one (1) year from the date of shipment. In the event any such defect should appear, it should be reported in writing to the manufacture during the warranty period.

3.5 FOUNDATION

A. Tank foundation shall be concrete ringwall per AWWA D103-09 section 13.4.1 or granular berm with steel retainer ring per AWWA D103-09 section 13.4.5.

END OF SECTION

SECTION 13441 – CONTROL LOOP DESCRIPTIONS

PART 1 – GENERAL

1.1 SUMMARY

A. Section Includes:

1. Instrumentation control loops.

B. Related Sections include but are not necessarily limited to:

1. Section 13400 - General Requirements for Instrumentation, Systems and Controls
2. Section 13460 - Programmable Logic Controllers Based SCADA System

1.2 QUALITY ASSURANCE

See Section 13400.

1.3 SYSTEM DESCRIPTION

A. The plant overall process control narrative provides an overview of the proposed operation philosophy for the Pulehunui Wastewater Treatment Plant indicating both plant SCADA and vendor supplied PLC/LCP controlled functions.

1. Programming of the plant SCADA system will be the responsibility of the Membrane Bioreactor (MBR) Vendor.

2. Programming of vendor supplied PLC's shall be by the vendor.

3. The MBR Vendor is responsible for coordinating the programming interface between the plant SCADA and:

a. Vendor supplied PLCs or control panels supplied with the following equipment:

1) Rotary Drum Screens
2) Equalization Tank and Pumps
3) Equalization Tank Jet Aerator
4) UV Disinfection Equipment
5) Screw Press Dewatering System

6) Packaged Booster Pumps (Plant Reuse Pumps)
7) On-site WWTP pump station

b. Local Control Panels supplied with the following equipment:

1) Aerobic Digester Blowers

B. The control loop descriptions provide the functional requirements of the control loops represented in the Contract Documents.

4. Descriptions are provided as follows:

a. Control system overview and general description.
b. Major equipment to be controlled.
c. Major field mounted instruments (does not include local gages).
d. Manual control functions.
e. Automatic control functions/interlocks.
f. Major indications provided at local control panels, motor starters and VFD's.
g. Remote indications and alarms.

C. The control loop descriptions are not intended to be an inclusive listing of all elements and appurtenances required to execute loop functions, but are rather intended to supplement and complement the Drawings and other Specification Sections.

1. The control loop descriptions shall not be considered equal to a bill of materials.

D. Provide instrumentation hardware and software as necessary to perform control functions specified herein and shown on Drawings.

E. This facility has some control systems that are the responsibility of other suppliers but may have to interface with the control system described herein.

1.4 SUBMITTALS

A. See Section 01300 for requirements for the mechanics and administration of the submittal process.

B. See Sections 13400 and 13460.

C. Operation and Maintenance Manuals:

1. See Section 01300 for requirements for:

a. The mechanics and administration of the submittal process.
b. The content of Operation and Maintenance Manuals.

PART 2 – PRODUCTS

Not used.

PART 3 – EXECUTION

3.1 CONTROL LOOPS

A. Human Machine Interface (HMI) Software / PLC Configuration:

1. General:

a. The following control loop descriptions are not intended to provide exhaustive descriptions of all monitoring and control requirements. The control loop descriptions herein are intended to provide the control requirements of major loop and should be used in conjunction with information provided on the P&ID's and the I/O List.

b. In addition to the requirements specifically stated within the control loop descriptions, all control software and hardware shall be provided as required to ensure the safe and reliable operation of all controlled equipment.

c. An explanation of how equipment will respond when placed in Hand, Manual, Off, or Jog control is typically not included because these control functions are self-explanatory. See the P&ID drawings for precise information.

d. All calculations, trip points from analog values, timers, numeric manipulations, etc., shall be located in the PLC and not in the operator interface software.

e. All motors shall be tripped by the PLC if the running feedback signal is not received within 5 seconds after receiving a Start signal.

f. All valves shall go to the de-energized position if the Open or Close signal is not confirmed within 30 seconds after receiving the Open or Close signal. The time value varies as to the type and size of the valve.

g. A “transmitter trouble” alarm shall be generated upon the loss of each transmitter signal, or if the signal is “out-of-range” (outside the 4 to 20 mA signal).

h. A “fail-safe” design shall be incorporated into the design such that the loss of any signal or loss of power shall not endanger personnel or result in equipment damage.

i. Any re-start of the PLC processor shall not re-start the plant equipment. An operator initiated controlled re-start of the plant equipment shall be implemented in the PLC logic so that all of the plant’s motors do not start simultaneously.

j. All “soft” alarms on analog signals shall reside in the PLC logic with de-bounce timers. The soft setpoint shall be able to be modified through the HMI system with appropriate security.

k. All alarm and trip time delays shall reside in the PLC and be operator adjustable from the HMI system with appropriate security.

l. The P&ID shows all of the PLC I/O points but not the associated logic and graphic functions. This document will explain the information needed by the Systems Integrator that is not on the P&ID’s.

m. All process values, ranges, and setpoints described herein shall be considered “Initial values” and may be changed during installation and start-up.

n. The PLC and HMI system shall validate all operator entered setpoint values before implementation. All alarm setpoint changes can be made by an Operator level password unless otherwise noted and all trip setpoint changes can be made by a Supervisor level password.

o. Most, if not all, flow signal inputs are to be totalized for each calendar day. The HMI system shall display a value for “today’s total flow” (FQI-xxxx), and “yesterday’s total flow”

(FQIY-xxxx). Each day's total is to be stored in the HMI system for eventual printout on a monthly basis.

p. In general, the instrument tags shown on the P&ID's shall be available to the operator on the graphic screens.

q. Motor runtimes shall be calculated and displayed for all process pumps. The runtime value shall be able to be reset from the HMI system.

r. All PID loops shall be programmed in the PLC for "bumpless transfer" between the Auto and Manual modes from the HMI system.

s. Alarms:

1) All open/close valves and on/off motors monitored by the PLC system shall have a maximum time value allowed to either open/close or start/stop.

2) Failure to achieve the control function within this maximum time value will result in a time out alarm for each piece of equipment.

3) An alarm will be generated from the PLC to the operator interface software for indication of the control function time out failure (i.e., Pump XXX-XXX FAIL TO START or Valve XXX-XXX FAIL TO CLOSE, etc.).

4) Other specific alarms are designated in the control loop descriptions.

5) All alarms are to be sealed (latched) in at the PLC until acknowledged via the operator interface.

t. Analog inputs: All analog inputs to the PLC shall be configured in the operator interface software (HMI) for historical trending.

1) Exception: pump speed for VFD driven pumps and blowers.

u. Analog outputs: All setpoints for minimum and maximum values shall be operator adjustable via the operator interface software.

v. Operator entries: Entries made by the operator (such as operation modes, setpoints, etc.) shall be displayed on the process screens for information.

2. Screens:

a. General: The screens for process control/observation shall be configured using a 3-level hierarchy plus an alarm screen, PLC System status screen, Report Selection screen, and real-time/historical trend displays.

1) The top level is the plant overview.

2) The second level is the process screens.

3) The equipment control detail screens are the bottom level.

b. Plant overview: The process overview screen shall consist of a simplified schematic of the plant and contain active displays for the major plant flows and levels.

1) Each process flow area shall be “active” so that clicking with the mouse will take the operator to a process screen showing full status for all of the items in that process area.

2) At the bottom of the process overview screen shall be a button to move to the alarm screen, a button to move to the historical/real time trend display, a button to move to report generation, and a button to move to the PLC system status screen and a button to return to the Plant Overview Screen.

c. Process screens: The Process Screens shall be developed to show the full status for each piece of equipment within the process displayed.

1) The color of the equipment shall vary as well as a text indicator to show the status of each valve, pump, etc.

2) All analog values associated with the process displayed shall be shown.

3) Each piece of equipment which can be controlled shall be “active” and allow the operator to click on the equipment and bring up a pop-up equipment changes control detail screen.

4) There shall be three (3) buttons in the same location at the bottom of each process screen to move back to the plant overview screen, the alarm screen, and the trend screen.

d. Equipment control detail pop-up:

1) Develop a set of standard equipment control detail pop-ups to be used for each type of equipment controlled from the HMI.

2) Each pop-up shall include a DONE button that hides the pop-up when done.

3) Equipment symbol elements in the pop-up shall be animated to show when the equipment changes state to the command state.

e. Alarm screen:

1) Regardless of which screen an operator is on, a flashing read ALARM box will come up on the current screen directing the user to the alarms screen.

2) The flashing red ALARM box will not go away until the alarm is acknowledged by a user.

3) All alarms will have a time date stamp and will be printed to a dedicated printer.

4) Alarm designation names are called out in the respective control loop description.

5) By clicking the alarm box on any screen, the operator will view the Alarm Screen.

3. The HMI displays shall be animated as necessary to clearly convey equipment status, operation modes, process displays, alarms, etc.

a. Equipment status color:

1) ON-Green.

2) OFF-White.
3) OPEN-Green.
4) CLOSED-White.
5) FAIL-Red (flashing).
6) VALVE IN TRANSITION-Yellow.

b. Provide numeric representation of process signals in engineering units.

1) Graphical animation shall also be used to depict levels in tanks, wetwells, and sumps where these signals are available.

c. All HMI displays shall use consistent styles to convey information to operator, and for operator entry.

B. Plant Overall Process Narrative

1. The process objective of the Pulehunui Wastewater Treatment Plant is to produce an effluent that meets the standards for effluent reuse (R-1). The following presents a general description of the liquids and solids handling processes.

2. Wastewater is pumped to the Headworks where it is metered through a magnetic flow meter (FE/FIT 0090) and then screened by a pair of Rotary Drum Screens (SCR-0100A and SCR-0100B). Each screening unit is sized for the entire design flow and up to 50% of future flows. Screenings are removed from each Rotary Drum Screen as it rotates and fall onto trash container that will be manually emptied daily. The screenings from the trash container are deposited in a larger trash bin for disposal at a landfill. Each Rotary Drum Screen is equipped with a spray wash system to aid in the removal of screenings and to flush organics from the screenings. Manual knife gate valves are provided to isolate each screen at the influent end and butterfly valves at the discharge end.

3. The screened raw wastewater from the Rotary Drum Screens flows via pipe to the Flow Equalization Tank (FET). A Jet Aerator Pump (JA-0201) is provided to keep the tank contents mixed and to provide enough oxygen to the liquid to prevent it from becoming anaerobic. Level switch (LS 0231) controls the on/off operation of the jet aerator. Two variable speed Submersible Pumps will be located in a separate wet well that can be isolated through a Slide Gate (SG-0210A). A second Slide Gate (SG-0210B) is provided for the future equalization tank.

4. From the wet well of the FET, the Submersible pumps transfer the screened wastewater to the anoxic tank of Membrane Bioreactor (MBR). The MBR is composed of two skid mounted packaged units. The process, equipment, controls, piping, pumps, blowers, motor control center, etc are installed on this skid mounted unit by the MBR manufacturer prior to shipment. The Contractor will be responsible for placing the two packaged units on the concrete slab; connecting MBR supplied piping between the two tanks and yard piping from the various other processes to/from the MBR; providing power to the MCC and installing wiring and conduits from the MCC to the PLC located in the portable utility trailer.

5. The effluent (permeate) from the MBR is pumped through a Magnetic Flow Meter (FE-0932) then to one of two pressurized ultraviolet units (UV) (UV-0900A and UV-0900B). Each UV unit is sized to treat the entire design flow. The UV units can be isolated for maintenance or repair by butterfly valves located before and after each unit.

6. The disinfected effluent from the pressurized UV unit, flows through a motorized 3-way plug valve (MV-0913) then to either a 150,000 gallon steel reservoir (T-0900) or one of two Soil Aquifered Treatment Basins (SAT). Under normal operation, the disinfected effluent will flow to the Reservoir where it will be used for onsite plant usage. The following events will trigger the motorized valve MV-0913 to divert the effluent from the reservoir to the SATs. These are:
   - not meeting the turbidity requirements for R-1 reuse (off-spec water)
   - Low UV transmissivity in the UV chambers
   - High water level in the reservoir

7. From the reservoir, a skid mounted Booster Pumps (P-1300A,B,C) will boost the pressure and distribute it to the WWTP for on-site use. The pumps will be variable speed to match plant water demands. Two of the pumps will be lead and the third will be backup. An emergency supply of potable water and solenoid valve is provided via an air gap if the reservoir level falls below a setpoint level.

8. Solids removed from the MBR are pumped to a circular steel tank Aerobic Digester with a working volume of 50,600 gallons. Diffused air is provided to the digester from a positive displacement blower with VFD (B-1001A) in the blower shed. Blower B-1001B is piped to serve as a stand-by for the aerobic digester blower. The digester is equipped with a telescoping valve to periodically remove the supernatant. This operation is manual and the supernatant flows to the Plant Drain Pump Station.

9. From the Aerobic Digester, the digested sludge is pumped to the Sludge Screw Dewatering Press (SP-1100). Polymer is added to the digested sludge that is being pumped to the Sludge Screw Press to enhance the dewatering process. Dewatered cake from the dewatering press drops on a concrete floor where a bobcat or front end loader scoops the dried sludge to be deposited in a roll-off container that is trucked to a landfill for disposal.

   The filtrate (the liquid removed from the digested sludge by the dewatering press) is directed via drain to the Plant Drain Pump Station.

10. Various plant drains, tank drains from the MBR, overflows, toilet waste from the utility trailer and recycle flows are directed to the Plant Drain Pump Station. Two variable speed submersible pumps (P-1200A, P-1200B) will be installed in this tank to pump various plant recycle flows to the Headworks downstream of the screens.

C. Upon receipt of any of the alarms described in the following control loop descriptions, the PLC shall provide a common output to the WWTP auto dialer.

D. **Control Loop 0090 – Raw Sewage Flowmeter**

1. Major Equipment: None

2. Major Field Instruments:

   a. Raw Sewage Flowmeter: FE/FIT-0090

3. Control Logic:

   a. Continuously operating flow meter sends a signal to the Plant SCADA system.

4. Indications at HMI:

a. Total daily flow: FIR-100
b. Yesterday's total flow: FIR-100
c. Instantaneous flow rate: FIR-100

5. Historical logging

a. Average daily flow rate (since last reset)
b. Daily total flow
c. Instantaneous flow, every 60 seconds

E. Control Loop 0100 – Rotary Drum Screen:

1. Major Equipment:

a. Rotary Drum Screens: SCR-0100A
b. Rotary Drum Screens: SCR-0100B

2. Major Field Instruments:

a. Local Control Panel: CP-0100A
b. Local Control Panel: CP-0100B
c. Spray wash solenoid valves: V-0113A
d. Spray wash solenoid valves: V-0113BED
e. Level sensors: LE-0130A
f. Level sensors: LE-0130B

3. Control Logic:

a. The Screen is controlled by the vendor-furnished control panel; refer to Specification Section 11332 for details.

1) If a Common alarm or HIGH water level alarm is detected by the PLC, indicate "Rotary Drum Screen XXXX Fault. Inlet knife gate valve to backup Rotary Drum Screen must be opened for proper operation."

b. When either LCP-0100A or LCP 0100B is in LOCAL, placing the LCP in AUTO enables the corresponding Screen to run.

4. Indications at HMI:

    a. Tank water level: HIGH: LAH-0130A
    b. Tank water level: HIGH: LAH-0130B
    c. Rotary Drum Screen: HAND-AUTO-OFF status: HI-0100A
    d. Rotary Drum Screen: HAND-AUTO-OFF status: HI-0100B
    e. Rotary Drum Screen: RUN: YI-0100A
    f. Rotary Drum Screen: RUN: YI-0100B
    g. Rotary Drum Screen: FAULT YA-0100A
    h. Rotary Drum Screen: FAULT YA-0100B
    i. Rotary Drum Screen: E-Stop Y1-0101A
    j. Rotary Drum Screen: E-Stop YI-0101B

5. Historical logging

    a. Channel levels (2), every 60 seconds.
    b. Above alarms.

F. **Control Loop 0200 - Flow Equalization Tanks**

1. Major Equipment:

    a. Jet Aerator: ME-0201
    b. Variable Speed Pump: EQP-0200A
    c. Variable Speed Pump: EQP-0200B
    d. Flow Equalization Tank: T-0200

2. Major Field Instruments:

    a. Level switch: LSHH-0234
    b. Level switch: LS-0231
    c. Level switch: LS-0232
    d. Level sensor: LE/LT-0233
    e. Jet Aerator Control Panel: CP-0201
    f. Pump Control Panel: CP-0200

3. Control Logic:

    a. When Jet Aerator, JA-0201, is in AUTO and LS-0231 senses a water level, then a RUN command is sent to the vendor supplied CP-0201. When the equalization tank water level in the tank reaches a low water level in the tank, the same level switch LS-0231, the RUN command is disabled.

b. When Control Panel, CP-0200 is in the AUTO mode, the variable Speed Pumps, EQP-0200A (EQP-0200B) operates in the following:

1) LE-0233 monitors the water level in the equalization tank wet well which sends a signal to CP-0200. When the level in the wet well reaches an operator adjustable level, a signal from the Control Panel, send a RUN command to either Pump EQP-0200A or EQP-0200B. As the water level rises, LE-0233 monitors this rise and sends a signal to the VFD via CP-0200 to increase the pumps speed.

2) As the water level in T-0200 drops, LE-0233 monitors the level and signals the VFD to decrease the speed of the pumps. At an operator determined level, the RUN command to EQP-0200A or EQP-0200B shall be disabled.

3) In the event LE-0233 fails, a back up Level Switch (LSHH-0234) will initiate a signal to the CP-0200 to send an alarm to the Plant SCADA.

c. HAND mode: Operator selects RUN command for equipment.

4. Indications at HMI:

a. Jet Aerator motor MOISTURE alarm: MA-0201
b. Jet Aerator motor temperature HIGH: TAH-0201
c. Jet Aerator HAND-AUTO-OFF: HI-0201
d. Jet Aerator RUN: YI-0201
e. Jet Aerator FAULT: YA-0201
f. Equalization Tank level HIGH HIGH: LSHH-0234
g. Pump motor MOISTURE alarm: MA-0202A
h. Pump motor MOISTURE alarm: MA-202B
i. Pump motor TEMPERATURE alarm: TAH-0202A
j. Pump motor TEMPERATURE alarm:TAH-0202B
k. Pump FAULT: YA-0202A
l. Pump FAULT: YA-0202B
m. Pump RUN: YI-0202A
n. Pump RUN: YI-0202B
o. Pump HAND-OFF-AUTO:HI-0202A

5. Historical logging

   a. Equalization Tank Wet Well level, every 60 seconds
   b. Above alarms

G. **Control Loops for Membrane Bioreactor shall be the responsibility of the Manufacturer.**

H. **Control Loop 1000 – Aerobic Digester**

1. Major Equipment:

   a. Aerobic Digester Tank: TV-1000
   b. Supernatant Telescoping Valve: TV-1011
   c. Blower: B-1001A
   d. Blower: B-1001B

2. Major Field Instruments:

   a. Digester tank level switches: LSH-1032
   b. Oxygen analyzer: AE/AIT-1031
   c. Air flow element: FE/FIT-1033
   d. WAS flow element: FE/FIT-1030
   e. Level switch HIGH-HIGH: LSHH-1032

3. Control Logic:

   a. Waste activated sludge is pumped from the packaged MBR unit daily. Operator ensures Aerobic Digester is prepared for flow by manually opening isolation valves and checking liquid level.

   b. Flow Element (FE-1030) monitors the waste activated sludge flow into the digester

   c. To thicken the waste activated sludge in the aerobic digester, the operator will manually shut down the aerobic digester blower and let the contents settle. The operator will then manually lower the Supernatant Telescoping Valve (TV-1000) to drain the supernatant, where it flows to the WWTP pump station and pumps it back to the headworks for treatment.

d. Operator selects which Aerobic Digester Blower (B-1001A and B-1001B) is online. One blower is the duty and the other is the spare blower.

e. Oxygen Meter AE-1031 continuously monitors the oxygen in the Aerobic Digester. Oxygen Transmitter AIT-1031 is coupled to the variable speed equipped Aerobic Digester Blower. It sends a signal to the lead Blower to either ramp up the blower speed or decrease it depending on oxygen levels in the Aerobic Digester. The operator adjustable level of oxygen in the Aerobic Digester is initially set at 1.0 mg/l.

f. Air Flow Element FE-1033 monitors the air flow to the Aerobic Digester.

g. Level switch LSHH-1032 will activate a HIGH level alarm if the water level in the tank reaches an operator adjustable level. Indicate “High water level in Aerobic Digester Tank”.

4. Indications at HMI:

a. Digester tank alarm level HIGH: LAHH-1032
b. Oxygen Level: AIR-1031
c. Oxygen Level Low: AAL-1031
d. Instantaneous Waste Activated Sludge Flow: FE-1030
e. Yesterday’s Waste Activated Sludge Flow: FIR-1030
f. Total Daily Waste Activated Sludge Flow: FIR-1030
g. Blower discharge temperature HIGH: TAH-1035
h. Blower speed: SI-1001A
i. Blower speed: SI-1001B
j. Blower HAND-AUTO-OFF: B-1001AED
k. Blower HAND-AUTO-OFF: B-1001BE
l. Blower RUN: YI-1001A
m. Blower RUN: YI-1001B
n. Blower FAULT: YA-1001A
o. Blower FAULT: YA-1001B
p. Blower discharge flow: FIR-1033
q. Blower discharge flow LOW: FAL-1033

5. Historical logging:

a. Instantaneous discharge flow for all active blowers, every 60 seconds.
b. Daily Total Waste Activated Sludge Flow

c. Above alarms

I. Control Loop 1100 - Solids Dewatering

1. Major Equipment:

   a. Skid mounted Polymer Package: POL-1101
   b. Sludge Screw Press: SP-1101
   c. Sludge Pumps: P-1100A
   d. Sludge Pump: P-1100B
   e. Static Mixer: SM-1103

2. Major Field Instruments:

   a. Polymer System Local Control Panel: CP-1101
   b. Sludge Screw Press Control Panel: CP-1100
   c. Sludge Flow Meter: FE-1130

3. Control Logic:

   a. The two (2) sludge pumps and skid mounted polymer package will be supplied by the Screw Press Manufacturer and shall be controlled by vendor-furnished control panels, CP-1100 and CP-1101.

   b. The digested sludge from the Aerobic Digester is pumped to the Sludge Screw Press (SP-1100) by Sludge Pumps (P-1100A and P-1100B). One pump will operate as the duty pump and the other will be spare.

   c. Flow meter (FE-1130) will monitor and record the flows to the Sludge Screw Press.

   d. Speed of polymer metering pump is controlled by CP-1101.

   e. The operator will initiate the dewatering process from the Sludge Screw Press Control panel. The Sludge Pump will draw the digested sludge from the Aerobic Digester and the Polymer Package will begin delivering polymer through an in-line installed injection ring. The sludge and polymer will mix at it enters the Static Mixer (SM-1103). After the static mixer, the sludge enters the Sludge Screw Press for dewatering.

   f. The Sludge Screw Press dewaters the sludge depositing the dry cake on a concrete slab where the operator will use a front end loader to pick up the cake sludge and deposit in a

bin for disposal at a landfill. The filtrate from the Sludge Screw Press will be flow to the WWTP drain system where it is piped to the WWTP pump station and be pumped back to the headworks

g. Frequency and length of time for dewatering of the sludge will be operator dependant.

4. Indications at HMI:

a. Sludge Pump Speed: SI-1102A
b. Sludge Pump Speed: SI-1102B
c. Sludge Pump Fault: YA-1102A
d. Sludge Pump Fault: YA-1102B
e. Sludge Pump Run: YI-1102A
f. Sludge Pump Run: YI-1102B
g. Sludge Flow: FIR-1130
h. Polymer Fault: YA-1103
i. Polymer Run: YI-1103
j. Instantaneous Sludge Flow: FE-1130
k. Yesterday's Waste Activated Sludge Flow: FIR-1130
l. Total Daily Waste Activated Sludge Flow: FIR-1130
m. Screw Press Running: YI-1100
n. Screw Press Fault: YA-1100
o. Screw Press Dewatering Mode:YI-1101
p. Screw Press Disturbance:YA-1101

5. Historical logging:

a. Average daily Sludge Screw Press feed flow
b. Above alarms

J. **Control Loop 0900- UV Disinfection Channel**

1. Major Equipment:

a. UV System Control Center: CP-0900A
b. UV System Control Center: CP-0900B

2. Major Field Instruments:

a. Effluent Flowmeter: FE/FIT-0932

3. Control Logic:

a. The Screen is controlled by the vendor-furnished control panel: refer to Specification Section 11332 for details.

b. Low transmittance sends a signal to the Plant SCADA system to open valve MV-0913 and divert flow to SAT. See Control Loop 0913

4. Indications at HMI:

a. Effluent Flow: FIR-0932
b. UV Transmittance: AIR-0901A
c. UV Transmittance: AIR-0901B
d. UV Transmittance LOW: YA-0900A
e. UV Transmittance LOW: YA-0900B
f. UV intensity: AIR-0902A
g. UV intensity: AIR-0902B
h. UV Fault: YA-0901A
i. UV Fault: YA-0901B
j. UV Control Panel REMOTE: HI-0900A
k. UV Control Panel REMOTE: HI-0900B
l. UV Control Panel FAULT: YA-0902A
m. UV Control Panel FAULT: HI-0902B

5. Historical logging:

a. Above alarms
b. Average daily effluent rate
c. Daily total flow
d. Instantaneous flow, every 60 seconds

K. Control Loop 0913 - Effluent Valve and R-1 Water Reservoir Control

1. Major Equipment: None
   a. 3-Way Plug valve: MV-0913
   b. R-1 Water Reservoir: T-0900

2. Major Field Instruments:

a. Filter Effluent turbidity meter: AE-0931

b. UV Control Panel: CP-0900A and CP-0900B (transmits transmissivity signal)

c. R-1 Water Tank Level Element: LE/LIT-0932

3. Control Logic

a. Continuously operating turbidity meter (AE-0931) sends a signal to the Plant SCADA system.

b. R-1 Water Reservoir level is continuously monitored by level element LE-0932 and sent to the Plant SCADA system.

1) In the event the water level in the R-1 Water Reservoir, an operator adjustable level will trigger solenoid valve (SV-0914) to open filling the reservoir to an level that is operator adjustable. An air gap between the water surface and the end of the potable water fill pipe is to be maintained.

c. Control Valve, MV-0913 is controlled in accordance with the HAND-AUTO-OFF selector switch furnished with the valve actuator.

1) When in the HAND control mode, the valve is manually controlled by the local OPEN AND CLOSE pushbuttons furnished with the valve actuator.

2) When in the AUTO control mode, each valve is controlled by the MBR supplied PLC. Position controller functions, ZSC-0913 control logic as described in the following:

a) Turbidity meter AE/AIT-0931 monitors the turbidity of the R-1 Effluent flow.
Send HIGH signal after operator adjustable pre-set time with high turbidity, initially set at 30 seconds.

b) Control Panels CP-0900A and CP-0900B monitors the UV transmittance at UV Disinfection Chambers UV-0900A and UV-0900B. CP-0900A or CP-0900B sends a signal indicating LOW transmittance.

c) LE/LIT-0932 monitors the water level in the R-1 Water Reservoir. Send HIGH signal after operator adjustable pre-set level. Level initially set at 12.5’ above

floor.

d) Control valve MV-0913 will be normally open so that flow is directed to the R-1 Water Reservoir (T-0900).

e) If either HIGH turbidity, LOW UV transmittance or HIGH water alarm is sent, PLC control logic will close control valve MV-09135 and flow will be directed to the Off-Spec Effluent Soil Aquifer Treatment (SAT) Basins. Indicate “Flow to SAT” at HMI

f) When alarms are no longer active for an operator adjustable preset amount of time, initially set to 30 seconds, send a signal to open MV-0913 to direct flow back to the R-1 Water Reservoir.

4. Indications at HMI:

a. Turbidity level: AIR-0931
b. Turbidity level HIGH: AAH-0931
c. Control Valve Open: YI-0914 (label “Flow to Reservoir)
d. Control Valve CLOSED: YI-0913 (label ”Flow to SAT”)
e. R-1 Reservoir Level: LR-0932
f. R-1 Reservoir HIGH: LA-0932

5. Historical logging:

a. Turbidity level, every 60 seconds
b. Above Alarms

L. **Control Loop 1200 - Plant Drain Pump Station**

1. Major Equipment:

a. Plant Drain Pump Station
b. Variable speed pump: P-1200A
c. Variable speed pump: P-1200B
d. Pump Control Panel: CP-1200

2. Major Field Instruments:

a. Level sensor: LE/LIT-1231

b. Level switch: LSHH-1232

3. Control Logic:

a. When variable speed pumps, P-1200A and P-1200B are in REMOTE:

1) The operator designates a lead pump, P-1200A or P-1200B.

2) When water level, LE/LT-1231, reaches an operator adjustable level, RUN command is sent to the lead pump.

3) When water level, LE/LT-1231, reaches an operator adjustable level, RUN command is sent to the lag pump.

4) When water level, LE/LT-1231, drops to an operator adjustable level, disable RUN command to lag pump.

5) When water level, LE/LT-1232, drops to an operator adjustable level, disable RUN command to lead pump.

b. When water level, LSHH-1232, reaches an operator adjustable level, sound alarm and indicate “High water level in Plant Drain Pump Station”

4. Indications at HMI:

a. Pump station wet well level: LIR-1200
b. Pump station wet well level HIGH HIGH: LAHH-1232
c. Pump station wet well level HIGH: LAH-1200
d. Pump station wet well level LOW: LAL-1200
e. Pump motor MOISTURE alarm: MA-1200A
f. Pump motor MOISTURE alarm: MA-1200B
g. Speed Pump motor temperature HIGH: TAH-1200
h. Speed Pump motor temperature HIGH: TAH-1200
i. Speed Pump HAND-AUTO-OFF: HI-1200A
j. Speed Pump HAND-AUTO-OFF: HI-1200B
k. Speed Pump RUN: YI-1200A
l. Speed Pump RUN: YI-1200B
m. Speed Pump FAULT: YA-1200A

n. Speed Pump FAULT: YA-1200B

5. Historical logging

a. Instantaneous water level, every 60 seconds
b. Above alarms

M. Control Loop 1300 – Plant Reuse Pump Station

1. Major Equipment:

a. Plant Reuse Pumps: P-1300
b. Variable Speed Pump: P-1300A
c. Variable Speed Pump: P-1300B
d. Variable Speed Pump:P-1300C

2. Major Field Instruments:

a. Local Control Panel: LCP-1300

3. Control Logic:

a. Pump Station is controlled by a vendor-furnished control panel: refer to Specification Section 15444 for details.

4. Indications at HMI:

a. Pump RUN: YI-1300A
b. Pump RUN: YI-1300B
c. Pump RUN: YI-1300C
d. Pump FAULT: YA-1300A
e. Pump FAULT: YA-1300B
f. Pump FAULT: YA-1300C
g. Pump discharge pressure: PI-1300

5. Historical logging

a. Above alarms

N. Control Loop 2001 – Engine-Generator

1. Major Equipment:

a. Engine generator (EG)

2. Major Field Instruments:

   a. Engine-generator control panel
   b. ATS switch controls

3. Control Logic:

   a. When EG receives a signal from the ATS, it starts and comes up to speed.

   b. When EG receives a stop top signal form the ATS after the cool down period, the engine is stopped.

4. Indications at HMI:

   a. EG running
   b. EG stopped
   c. EG Controls in automatic
   d. EG Controls in manual
   e. EG minor fault
   f. EG major fault shutdown

O. Control Loop 2002 – Automatic Transfer Switch (ATS)

1. Major Equipment:

   a. ATS

2. Control Logic:

   a. When ATS senses a loss of normal or commercial power, EG is signaled to start.

   b. When EG frequency and voltage are at rated values, ATS transfers the load from commercial to EG position.

   c. When normal or commercial power returns and is sensed to be stable, ATS transfers from the EG to normal power after a timed delay.

   d. ATS signals engine generator to run under no load condition to cool down for a predetermined time period, and then stops the engine.

   e. Perform engine exerciser as recommended by EG manufacturer.

3. Indications at HMI:

   a. Power system supplied from commercial or normal source
   b. Engine in cool down period
   c. Controls in automatic
   d. Controls in manual

END OF SECTION

SECTION 13601 – PRE-ENGINEERED METAL BUILDING

PART 1 – GENERAL

1.1 GENERAL REQUIREMENTS

A. Provide rigid frame building in place, complete.

B. Structural Performance: Provide metal building systems capable of withstanding the effects of gravity loads and the following loads and stresses within the limits and conditions indicated.

1. Engineering: Design metal building systems conforming to procedures described in MBMA MBSM.

2. Design Loads: Conform to the requirements of MBMA MBSM, ASCE 7-10, and the 2012 International Building Code (IBC).

3. Loads: Include all vertical loads induced by the building occupancy indicated on the drawings, as well as loads induced by maintenance workers, materials and equipment for roof live loads.

4. Wind Loads: Include horizontal loads induced by a basic wind speed as indicated on the drawings.

5. Collateral Loads: Include additional dead loads other than the weight of metal building system for permanent items such as sprinklers, mechanical systems, electrical systems, and ceilings.

6. Auxiliary Loads: None.

7. Load Combinations: Design metal building systems to withstand the most critical effects of load factors and load combinations as required by MBMA MBSM, ASCE 7, and the IBC.

8. Deflection Limits: Engineer assemblies to withstand design loads with deflections no greater than the following:

a. Purlins and Rafters; vertical deflection of 1/240 of the span.

b. Girts; horizontal deflection of 1/240 of the span.

c. Metal Roof Panels; vertical deflection of 1/240 of the span.

C. Seismic Performance: Design and engineer metal building system capable of withstanding the effects of earthquake motions determined according to ASCE 7, AISC 341, and the IBC.

D. Thermal Movements: Provide metal panel systems that allow for thermal

movements resulting from the following maximum change (range) in ambient and surface temperatures by preventing buckling, opening of joints, overstressing of components, failure of joint sealants, failure of connections, and other detrimental effects. Base engineering calculation on surface temperatures of materials due to both solar heat gain and nighttime-sky heat loss as follows.

1. Temperature Change (Range); 120 degrees F, ambient; 180 degrees F, material surfaces.

E. Water Penetration for Metal Roof Panels: No water penetration when tested according to ASTM E1646 at test-pressure difference of 2.86 lbf/sq.ft.

F. Wind-Uplift Resistance: Provide metal roof panel assemblies that comply with ASCE 7.

1.2 SYSTEM DESCRIPTION

A. General: Provide a complete, integrated set of mutually dependent components and assemblies that form a metal building system capable of withstanding structural and other loads, thermally induced movement, and exposure to weather without failure or infiltration of water into building interior. Include primary and secondary framing, metal roof panels and accessories complying with requirements indicated.

1. Provide metal building system of size and with spacing, slopes, and spans indicated.

B. Primary Frame Type

1. Rigid Clear Span: Solid-member, structural-framing system utilizing tapered columns and beams, without interior columns.

C. Fixed End-Wall Framing: Provide manufacturer's standard fixed end wall, for buildings not required to be expandable, consisting of load-bearing end-wall with corner columns, and rafters.

D. Secondary Frame Type: Provide manufacturer's standard purlins and joists and partially inset-framed or exterior-framed (bypass) girts to accommodate the requirements indicated.

E. Eave Height: Eave height as indicated on drawings.

F. Bay Spacing: Bay spacing as indicated on drawings.

G. Roof Slope: Roof slope as indicated on drawings.

H. Roof System: Provide manufacturer's standard vertical-rib, standing-seam.

1.3 SUBMITTALS

A. Descriptive Data: Submit descriptive data on all materials to be provided under this section. Data shall be sufficient to indicate conformance to all specified requirements.

B. Shop Drawings: Submit shop drawings, to include instructions and diagrams as necessary to erect the building and install all components. Shop drawings shall be stamped by a structural engineer licensed in the State of Hawaii. As a minimum, shop drawings shall contain:

1. Anchor bolt layouts and sizes.
2. Structural connections.
3. Roofing and siding connections.
4. Joint sealing and caulking.
5. Flashings.
6. Accessory installation.
7. All details and instructions necessary for complete assembly.

C. Certificates of Conformance or Compliance: Submit certificates from the manufacturer attesting that all materials conform to all requirements of this specification and of referenced.

D. Colors: Submit one sample of each color indicated for verification that products match the colors indicated. Where colors are not indicated, submit not less than 3 different samples of manufacturer's standard colors for selection by the Owner.

E. Design Calculations: Submit engineering design calculations and stress diagrams of the following components: Main frame, purlins, girts, end frame, columns and bracing. Submit all column reactions required for footing design. Calculations shall be prepared and stamped by a structural engineer licensed in the State of Hawaii.

1.4 DELIVERY, STORAGE, AND HANDLING

A. Prefabricated components, panels and other manufactured items shall be delivered, stored, handled and erected in such a manner that they will not be damaged or deformed. Materials stored on the site before erection shall be stacked on platforms or pallets and covered with tarpaulins or other suitable weather-tight covering. All metal sheets or panels shall be stored so that water which might have accumulated during transit or storage will drain off; the sheets or panels shall not be stored in contact with materials that might cause staining.

B. Upon arrival on the job site, the sheets or panels shall be inspected; if found wet, the

moisture shall be removed and the sheets or panels shall be restacked and protected until used.

1.5 WARRANTY

A. Building System Warranty: Furnish manufacturer's no-dollar-limit warranty for the metal building system. The warranty period is to be no less than 10 years of materials and workmanship and 20 years for finish starting from the date of acceptance of the work and be issued directly to the Government. The warranty must provide that if within the warranty period, the metal building system shows evidence of deterioration, correcting of any defects is the responsibility of the metal building system manufacturer. Repairs that become necessary because of defective materials and workmanship while metal building system is under warranty are to be performed within 72 hours after notification, unless additional time is approved by the Owner. Failure to perform repairs within 72 hours of notification will constitute grounds for having emergency repairs performed by others and will not void the warranty.

B. Roof System Weather-Tightness Warranty: Furnish manufacturer's no-dollar-limit warranty for the metal panel system. The warranty period is to be no less than 10 years from the date of acceptance of the work and be issued directly to the Government.

   1. The warranty is to provide that if within the warranty period the roof panel system shows evidence of corrosion, perforation, rupture, lost of weather-tightness or excess weathering due to deterioration of the panel system resulting from defective materials and correction of the defective workmanship is to be the responsibility of the metal building system manufacturer.

   2. Repairs that become necessary because of defective materials and workmanship while roof panel system is under warranty are to be performed within 72 hours after notification, unless additional time is approved by the Owner. Failure to perform temporary repairs within 72 hours of notification will constitute grounds for having emergency repairs performed by others and not void the warranty. Immediate follow-up and completion of permanent repairs must be performed within 14 days from date of notification.

C. Roof Panel Finish Warranty: Furnish manufacturer's no-dollar-limit warranty for the metal panel system. The warranty period is to be no less than 20 years from the date of acceptance of the work and be issued directly to the Government.

   1. The warranty is to provide that if within the warranty period the metal panel system shows evidence of checking, delaminating cracking, peeling, chalk in excess of a numerical rating of eight, as determined by ASTM D4214 test procedures; or change colors in excess of five CIE or Hunter units in accordance with ASTM D2244 or excess weathering due to deterioration of the panel system resulting from defective materials and finish or correction of the defective workmanship is to be the responsibility of the metal building system manufacturer.

2. Liability under this warranty is exclusively limited to replacing the defective coated materials.

3. Repairs that become necessary because of defective materials and workmanship while roof panel system is under warranty are to be performed within 72 hours after notification, unless additional time is approved by the Owner. Failure to perform repairs within 72 hours of notification will constitute grounds for having emergency repairs performed by others and not void the warranty.

PART 2 – PRODUCTS

2.1 MATERIALS

A. Structural Steel: In accordance with AISC Steel Construction Manual, except in accordance with AISI Cold Formed Steel Design Manual for members less than 3/16 inch thick. Structural members having cross sectional areas other than that indicated and connections that differ from the connections indicated may be used providing they conform to all design requirements and shop drawings indicating all such changes are submitted and approved.

1. W-Shapes: ASTM A992; ASTM A572 or ASTM A529.

2. Channel, Angles, M-Shapes and S-Shapes: ASTM A36; ASTM A572 or ASTM A529.

3. Plate and Bar: ASTM A36, ASTM A572 or ASTM A529.

4. Steel Pipe: ASTM A36, ASTM A53, ASTM A572 or ASTM A529.

B. Cold-Formed and Hot Formed Hollow Structural Sections: Cold formed: ASTM A500 or ASTM B221. Hot-formed: ASTM A501.

C. Metallic-Coated Steel Sheet: ASTM A653, ASTM A606.

D. Metallic-Coated Steel Sheet Pre-painted with Coil Stock Coating: Steel sheet metallic coated by the hot-dip process and pre-painted by the coil-coating process to comply with ASTM A755.

1. Zinc-Coated (Galvanized) Steel Sheet: ASTM A653, and ASTM A123.

2. Aluminum-Zinc Alloy-Coated Steel Sheet: ASTM A792 and ASTM A463.

E. High-Strength Bolts, Nuts, and Washers: ASTM F1852 (A325TC), steel structural bolts; ASTM A563 heavy hex carbon-steel nuts; and ASTM F436 hardened carbon-steel washers.

1. Finish: Mechanically deposited zinc coating, ASTM B695.

F. Non-High-Strength Bolts, Nuts, and Washers: ASTM A307, ASTM A563, and ASTM F844.

1. Finish: ASTM A153.

G. Anchor Rods: ASTM F1554, ASTM A572 or ASTM A36.

1. Configuration: Straight.

2. Nuts: ASTM A563 heavy hex carbon steel.

3. Plate Washers: ASTM A36 carbon steel.

4. Washers: ASTM F436 hardened carbon steel.

5. Finish: Hot-dip zinc coating, ASTM A153.

H. Treaded Rods: ASTM A193, ASTM A572 or ASTM A36.

1. Nuts: ASTM A563 heavy hex carbon steel.

2. Washers: ASTM F436 hardened carbon steel.

3. Finish: Hot-dip zinc coating, ASTM A153.

I. Primer: SSPC-Paint 15, Type I, red oxide.

J. Panel Material.

1. Roof Panels:

a. Standing seam panels minimum 22 gage, 50,000 psi yield in either G90 zinc-coated (galvanized sheet or aluminum-zinc alloy coated (AZ50 or AZ55) steel.

b. Standing seam panel shall be minimum 24 inches width coverage with 2 inch high ribs (3 inches including the seam) that can be used on a minimum roof slope of 1/2 to 12.

c. Standing seam panel assembly shall meet or exceed a Class 90 Wind Uplift rating by Underwriter's Laboratories when tested in accordance with UL580. Roof panels shall also be tested in accordance with Air Infiltration, ASTM E1680 and Water Penetration, ASTM E1646. The roof panel shall have a Class A fire rating when tested in accordance with test procedure ASTM E108.

K. Sheet Metal Accessories: Of same material and finish as used for adjacent wall or roof covering, except as specified otherwise herein.

1. Caps, Strips and Plates: Ridge caps, eave and edge strips, fascia strips, miscellaneous flashings and miscellaneous sheet metal accessories, unless specified otherwise herein, shall be formed from the same material and gage as the roof covering. Wall plates, base angles or base channels and other miscellaneous framing members may be standard structural steel shapes, or they may be formed from galvanized steel not lighter than 18 gage.

2. Continuous Gravity (Ridge) Roof Ventilators: Ventilators shall be provided complete with exterior wind band, integral rain cone, braces, chain-operated dampers and bird screening. The ventilators shall be provided in sections 8 or 10 feet long, and shall be braced at 4- or 5-foot intervals. Ventilators shall be fabricated from Kynar finished aluminum with a thickness sufficient to provide the necessary rigidity to ensure smooth operation. The sections shall be joined together with splice plates of the same material as the sections, and the joints shall be formed in a manner that assures weather-¬tightness. Where intermittent installation is indicated, end closures for each section shall be provided. Throat size (vent opening) shall be 12 inches. Ventilators shall be screened with 3 by 3 mesh per square inch woven aluminum or stainless steel wire bird screening.

L. Panel Finish: All panels are to receive a factory-applied Kynar 500/Hylar 5000 finish consisting of a baked-on top-coat with a manufacturer's recommended prime coat conforming to the following:

1. Metal Preparation: All metal is to have the surfaces carefully prepared for painting on a continuous process coil coating line by alkali cleaning, hot water rinsing, application of chemical conversion coating, cold water rinsing, sealing with acid rinse, and thorough drying.

2. Prime Coating: A base coat of epoxy paint, specifically formulated to interact with the top-coat, is to be applied to the prepared surfaces by roll coating to a dry film thickness of 0.20 plus 0.05 mils. This prime coat must be oven cured prior to application of finish coat.

3. Exterior Finish Coating: Apply the finish coating over the primer by roll coating to dry film thickness of 0.80 plus 5 mils for a total dry film thickness of 1.00 plus 0.10 mils. This finish coat must be oven-cured.

4. Interior Finish Coating: Apply a wash-coat on the reverse side over the primer by roll coating to a dry film thickness of 0.30 plus 0.05 mils for a total dry film thickness of 0.50 plus 0.10 mils. The wash-coat must be oven-cured.

5. Color: The exterior finish chosen from the manufacturer's color charts and chips. Exterior roof color dark green.

6. Physical Properties: Coating must conform to the industry and manufacturer's standard performance criteria as listed by the following certified test reports:

   a. Chalking: ASTM DEFONLINE.

b. Color Change and Conformity: ASTM D2244.

c. Weatherometer: ASTM G152, ASTM G153 and ASTM D822.

d. Humidity: ASTM D2247 and ASTM D714.

e. Salt Spray: ASTM B117.

f. Chemical Pollution: ASTM D1308.

g. Gloss at 60 degrees: ASTM D523.

h. Pencil Hardness: ASTM D3363.

i. Reverse Impact: ASTM D2794.

j. Flexibility: ASTM D522.

k. Abrasion: ASTM D968.

l. Flame Spread: ASTM E84.

M. Repair of Finish Protection: Repair paint for color finish enameled metal panel must be compatible paint of the same formula and color as the specified finish furnished by the metal panel manufacturer, conforming to ASTM A780.

N. Polyethylene Vapor Retarder: Install polyethylene vapor retarder membrane over entire wall and roof surface. Use fully compatible polyethylene tape to seal the edges of the sheets to provide a vapor tight membrane. Lap sheets not less than 6 inch. Provide sufficient material to avoid inducing stresses in sheets due to stretching or binding. All tears or punctures visible in the finished surface, at anytime during the construction process, must be sealed with polyethylene tape.

O. Rubber Closure Strips: Closed-cell, expanded cellular rubber conforming to ASTM D1056 and ASTM D1667; extruded or molded to the configuration of the specified metal panel and in lengths supplied by the metal panel manufacturer.

P. Metal Closure Strips: Factory fabricated aluminum or steel closure strips to be the same gauge, color, finish and profile of the specified roof panel.

Q. Joint Sealants:

1. Sealants: Sealants are to be an approved gun type for use in hand or air-pressure caulking guns at temperatures above 40 degrees F (or frost-free application at temperatures above 10 degrees F with minimum solid content of 85 percent of the total volume. Sealant is to dry with a tough, durable surface skin which permits it to remain soft and pliable underneath, providing a weather-tight joint. No migratory staining is permitted on painted or unpainted metal, stone, glass, vinyl, or wood.

a. Prime all joints to receive sealants with a compatible one-component or two-component primer as recommended by the metal panel manufacturer.

2. Shop-Applied: Sealant for shop-applied caulking must be an approved gun grade, non-sag one component polysulfide or silicone conforming to ASTM C920, Type II, and with a curing time to ensure the sealant's plasticity at the time of field erection.

3. Field-Applied: Sealant for field-applied caulking must be an approved gun grade, non-sag one component polysulfide or two-component polyurethane with an initial maximum Shore A durometer hardness of 25, and conforming to ASTM C920, Type II. Color to match panel colors.

4. Tape Sealant: Pressure sensitive, 100 percent solid with a release paper backing; permanently elastic, non-sagging, non-toxic and non-staining as approved by the metal panel manufacturer.

R. Fasteners

1. General: Type, material, corrosion resistance, size and sufficient length to penetrate the supporting member a minimum of 1 inch with other properties required to fasten miscellaneous metal framing members to substrates in accordance with the metal panel manufacturer's and ASCE 7 requirements.

2. Exposed Fasteners: Fasteners for metal panels to be corrosion resistant coated steel, aluminum, stainless steel, or nylon capped steel compatible with the sheet panel or flashing and of a type and size recommended by the manufacturer to meet the performance requirements and design loads. Fasteners for accessories to be the manufacturer's standard. Provide an integral metal washer matching the color of attached material with compressible sealing EPDM gasket approximately 3/32 inch thick.

3. Screws: Screws to be corrosion resistant coated steel, aluminum and/or stainless steel being the type and size recommended by the manufacturer to meet the performance requirements.

4. Attachments Clips: Fabricate clips from steel hot-dipped galvanized in accordance with ASTM A653 or Series 300 stainless steel. Size, shape, thickness and capacity as required meeting the insulation thickness and design load criteria specified.

S. Gutters and Downspouts: Aluminum material roll formed in 20-foot lengths and coated with Kynar material. Gutters and downspouts shall be dark green.

T. Touch-up Kits: Provide 4 one-quart containers of touch up material for the panel finish. Deliver the containers to the Owner. Material damage during construction will be replaced with new material, not touched up by the Contractor.

U. Doors: Fire-Rated and Non-Fire-Rated Door Assemblies conforming with NFPA 80 and based on testing according to NFPA 252 as specified in Division 08 – DOORS AND WINDOWS unless otherwise indicated.

V. Windows: Window Assemblies conforming to as specified in Division 08 – DOORS AND WINDOWS unless otherwise indicated.

2.2 FABRICATION

A. General: Comply with MBMA MBSM - "Metal Building Systems Manual": Chapter IV, Section 9, "Fabrication and Erection Tolerances."

2.3 STRUCTURAL FRAMING

A. General: Clean all framing members to remove loose rust and mill scale. Provide 1 shop coat of primer to an average dry film thickness of 1 mil according to SSPC SP 2. Balance of painting and coating procedures must conform to SSPC Paint 15 and SSPC Painting Manual.

B. Primary Framing: Manufacturer's standard structural primary framing system includes transverse and lean-to frames; rafter, rakes, and canopy beams; intermediate, end-wall, and corner columns; and wind bracing designed to withstand required loads and specified requirements. Provide frames with attachment plates, bearing plates, and splice members. Provide frame span and spacing indicated.

1. Shop fabricate framing components by welding or by using high-strength bolts to the indicated size and section with base-plates, bearing plates, stiffeners, and other items required. Cut, form, punch, drill, and weld framing for bolted field erection.

2. Rigid Clear-Span Frames: I-shaped frame sections fabricated from shop-welded, built-up steel plates or structural-steel shapes. Interior columns are not permitted.

3. Exterior Column and Beam Type: Tapered.

4. Rafter Type: Uniform depth.

C. Secondary Framing: Manufacturer's standard secondary framing members, including purlins, girts, eave struts, flange bracing, base members, gable angles, clips, headers, jambs, and other miscellaneous structural members. Fabricate framing from cold-formed, structural-steel sheet or roll-formed, metallic-coated steel sheet pre-painted with coil coating, unless otherwise indicated.

1. Purlins: C or Z-shaped sections; fabricated from steel sheet, built-up steel plates, or structural-steel shapes; minimum depth as required to comply with system performance requirements.

2. Girts: C or Z-shaped sections; fabricated from steel sheet, built-up steel plates,

or structural-steel shapes. Form ends of Z-sections with stiffening lips angled 40 to 50 degrees to flange minimum depth as required to comply with system performance requirements.

3. Eave Struts: Unequal-flange, C-shaped sections; fabricated from steel sheet, built-up steel plates, or structural-steel shapes; to provide adequate backup for metal panels.

4. Flange Bracing: Structural-steel angles or cold-formed structural tubing to stiffen primary frame flanges.

5. Sag Bracing: Structural-steel angles.

6. Base or Sill Angles: Zinc-coated (galvanized) steel sheet.

7. Purlin and Girt Clips: Steel sheet. Provide galvanized clips where clips are connected to galvanized framing members.

8. Framing for Openings: Channel shapes; fabricated cold-formed, structural-steel sheet or structural-steel shapes. Frame head and jamb of door openings, and head, jamb, and sill of other openings.

9. Miscellaneous Structural Members: Manufacturer's standard sections fabricated from cold-formed, structural-steel sheet; built-up steel plates; or zinc-coated (galvanized) steel sheet; designed to withstand required loads.

D. Bracing: Provide adjustable wind bracing as follows:

1. Purlins: C or Z-shaped sections; fabricated from steel sheet, built- Rods: ASTM A36; ASTM A572; or ASTM A529 threaded a minimum of 12 inches at each end.

2. Angles: Fabricated from structural-steel shapes to match primary framing, of size required to withstand design loads.

3. Rigid Portal Frames: Fabricate from shop-welded, built-up steel plates or structural-steel shapes to match primary framing; of size required to withstand design loads.

4. Diaphragm Action of Metal Panels: Design metal building to resist wind forces through diaphragm action of metal panels.

5. Bracing: Provide wind bracing using any method specified above, at manufacturer's option.

PART 3 – EXECUTION

3.1 EXAMINATION

A. Before erection proceeds examine with the erector present the concrete foundation

dimensions, concrete and/or masonry bearing surfaces, anchor bolt size and placement, survey slab elevation, locations of bearing plates, and other embedment's to receive structural framing with the metal building manufacturer's templates and drawings before erecting any steel components for compliance with requirements for installation tolerances and other conditions affecting performance of the Work.

B. Examine primary and secondary framing to verify that rafters, purlins, angles, channels, and other structural and metal panel support members and anchorages have been installed within alignment tolerances required by metal building manufacturer, UL, ASTM, ASCE 7 and as required by the building code for the IBC.

C. Examine roughing-in for components and systems penetrating metal roof panels to verify actual locations of penetrations relative to seam locations of metal panels before metal roof panel installation.

D. Submit to the Owner a written report, endorsed by Erector, listing conditions detrimental to performance of the Work.

E. Proceed with erection only after unsatisfactory conditions have been corrected.

3.2 PREPARATION

A. Provide temporary shoring, guys, braces, and other supports during erection to keep the structural framing secure, plumb, and in alignment against temporary construction loading or loads equal in intensity of the building design loads. Remove temporary support systems when permanent structural framing, connections, and bracing are in place, unless otherwise indicated.

B. Miscellaneous Framing: Install sub-purlins, girts, angles, furring, and other miscellaneous support members or anchorage for the metal roof panels, doors, windows, ventilators and louvers according to metal building manufacturer's written instructions.

3.3 ERECTION

A. Erection of building shall be in accordance with the manufacturer's approved instructions and diagrams, approved shop drawings and other erection documents in accordance with MBMA MBSM – “Metal Building Systems Manual”. Defects or errors in the fabrication of building components shall be corrected in an approved manner. Defects or errors in fabrication of components which cannot be corrected in an approved manner shall be replaced by non-defective members. Columns and rigid frames shall be plumbed in both directions, guyed and stayed, and all framing elements shall be accurately spaced to assure the proper fitting of prefabricated roof.

1. Do not field cut, drill, or alter structural members without written approval from metal building system manufacturer's professional engineer and the Owner.

2. Set structural framing accurately in locations and to elevations indicated and

according to AISC 325 specifications. Maintain structural stability of frame during erection.

3. Clean and roughen concrete and masonry bearing surfaces prior to setting plates. Clean bottom surface of plates.

4. Align and adjust structural framing before permanent bolt-up and connections. Perform necessary adjustments and alignment to compensate for changes or discrepancies in elevations.

5. Maintain erection tolerances of structural framing in accordance with AISC 360.

B. Dissimilar Materials: Where aluminum surfaces come in contact with ferrous metal or other incompatible metals, the aluminum surfaces shall be kept from direct contact by one of the following methods:

1. Method (a): Painting the incompatible metal with a coating of heavy-bodied bituminous paint conforming to Federal Specification TT-C-520.

2. Method (b): An approved non-absorptive gasket.

3. Method (c): An approved caulking placed between the aluminum and the incompatible metal.

C. Rigid Frames, Column Bases and Sill Members: Set accurately, using a non-shrinking grouting mortar if needed to obtain uniform bearing on the concrete and to maintain a level base line elevation. Anchors and anchor bolts for securing rigid frames, columns, or sill members to foundations shall be steel, unpainted, set accurately to templates, and of proper size to adequately resist all applicable design loads at the base. Grouting mortar shall be a mixture of one part of blended portland cement to two parts of well-graded fine aggregate, and enough water to provide a maximum water-cement ratio of 0.50. The blended portland cement shall be a mixture of cement with 1/4 ounce of aluminum powder to each sack of cement. Surfaces to receive the mortar shall be cleaned and moistened thoroughly immediately before placement of mortar. Exposed surfaces of mortar shall be water cured with wet burlap for 7 days.

D. Roof Construction: All roofing panels shall be applied with the configurations parallel to the slope of the roof. The roofing panels shall be supplied in the longest lengths obtainable with end laps occurring only at structural members with no transverse joints except at the junction of ventilators, skylights and similar openings. All side laps shall be laid away from the prevailing wind, and all side and end laps shall be sealed with the joint sealing material specified hereinbefore. The roof shall be flashed and sealed at the ridge, at eaves and rakes, at projections through the roof, and elsewhere as necessary. The placement of closure strips, flashing and sealing material shall be accomplished in an approved manner that will assure complete weather-tightness. Minimum side lap shall be one corrugation, configuration, or interlocking rib. End laps shall be not less than 8 inches, and shall occur only over purlins.

E. Metal Panel Fastener Installation: Anchor metal panels and other components of the Work securely in place, using manufacturer's approved fasteners according to manufacturers' written instructions.

F. Flashing, Trim and Closure Installation

1. Comply with performance requirements, manufacturer's written installation instructions, and SMACNA 1793. Provide concealed fasteners where possible, and set units true to line and level as indicated. Install work with laps, joints, and seams that will be permanently watertight and weather resistant.

2. Sheet metalwork is to be accomplished to form weather-tight construction without waves, warps, buckles, fastening stresses or distortion, and allow for expansion and contraction. Cutting, fitting, drilling, and other operations in connection with sheet metal required to accommodate the work of other trades is to be performed by sheet metal mechanics.

G. Accessory Installation:

1. General: Install accessories with positive anchorage to building and weather-tight mounting, and provide for thermal expansion. Coordinate installation with flashings and other components.

2. Gutters and Downspouts: Comply with performance requirements, manufacturer's written installation instructions, and install sheet metal roof drainage items to produce complete roof drainage system according to SMACNA 1793 recommendations and as indicated. Coordinate installation of roof perimeter flashing with installation of roof drainage system. Color to be selected by the Owner.

3. Roof Accessories and Specialties: Install roof accessories and specialties complete with necessary hardware, anchors, dampers, weather guards, rain caps, and equipment supports as specified in Division 07 - THERMAL AND MOISTURE PROTECTION, unless otherwise indicated.

H. Clean-Up and Protection

1. Structural Framing: Clean all exposed structural framing at completion of installation. Remove metal shavings, filings, bolts, and wires from work area. Remove grease and oil films, excess sealants, handling marks, contamination from steel wool, fittings and drilling debris and scrub the work clean. Exposed metal surfaces to be free of dents, creases, waves, scratch marks, solder or weld marks, and damage to the finish coating.

2. Metal Panels: Clean all exposed sheet metal work at completion of installation. Remove metal shavings, filings, nails, bolts, and wires from work area. Remove protective coverings/films, grease and oil films, excess sealants, handling marks, contamination from steel wool, fittings and drilling debris and scrub the work

clean. Exposed metal surfaces to be free of dents, creases, waves, scratch marks, solder or weld marks, and damage to the finish coating.

3. Touch-Up Painting: After erection, promptly clean, prepare, and prime or re-prime field connections, rust spots, and abraded surfaces of prime-painted structural framing and accessories. Clean and touch-up paint with manufacturer's touch-up paint.

I. Waste Management: Separate waste in accordance with the Waste Management Plan, placing copper materials, ferrous materials, and galvanized sheet metal in designated areas for reuse. Close and seal tightly all partly used adhesives and solvents; store protected in a well-ventilated, fire-safe area at moderate temperature.

1. Collect and place scrap/waste debris in containers. Promptly dispose of scrap/waste debris. Do not allow scrap/waste debris to accumulate on-site; transport scrap/waste debris from government property and legally dispose of them.

J. Special Inspections

1. Structural special inspections for anchor bolts cast in concrete, field welding, and high strength bolting shall be provided by a certified third party special inspector hired and paid for by the Contractor and shall conform to 2012 International Building Code Chapter 17 provisions.

K. Warranty:

1. Manufacturer’s Warranty: Submit all manufacturers' signed warranties to Owner prior to final commissioning and acceptance.

2. Contractor’s Warranty for Installation: Submit contractor's warranty for installation to the Owner prior to final commissioning and acceptance.

END OF SECTION

SECTION 15020 – TESTING AND DISINFECTING

PART 1 – GENERAL

1.1 SUMMARY

A. General Requirements: Except as otherwise provided herein, furnish all equipment, labor and materials required for testing of all pipes and valves, and disinfecting of pipes and valves that convey potable water. Disinfection shall be accomplished by chlorination. All chlorinating and testing operations shall be done in the presence of the Owner or his representative. Disinfection operations shall be scheduled by the Contractor as late as possible during the contract time period so as to assure the maximum degree of sterility of the facilities at the time the work is accepted by the Owner. Bacteriological testing shall be performed by a certified testing laboratory at the expense of the Contractor. Results of the bacteriological testing shall be satisfactory to Owner. Release of water from the pipelines, after testing and after disinfecting have been completed, shall be in accordance with all Federal and State regulations for discharge of chlorinated water. Discharge into any reservoir, stream, ditch or gully is not permitted.

1.2 RELATED SECTION

A. Section 11000 General Equipment Requirements

1.3 SUBMITTALS

A. Submit bacteriological test results.

B. Submit procedure for discharge and disposal of water used for testing and for disinfection including the ultimate disposition of such water.

PART 2 – PRODUCTS

2.1 LIQUID CHLORINE: AWWA B301.

2.2 HYPOCHLORITES: AWWA B300.

PART 3 – EXECUTION

3.1 PRESSURE AND LEAKAGE TEST

All pipelines shall be given combined pressure and leakage tests in sections of approved length. The Contractor shall, at his own expense, furnish and install suitable temporary testing plugs or caps, reaction blocks, pressure pumps, pipe connections, water meters, gages and other necessary equipment and all labor required to make the required test. All tests shall be made in the presence of the Construction Manager.

1. Subject to approval by the Construction Manager, and provided that the tests are made within a reasonable time considering the progress of the project as a whole, and the need to put the section into service, the Contractor may make the tests when he desires.

2. The section of pipe to be tested shall be filled with water, and all air shall be expelled from the pipe. To limit water hammer caused by air venting, the rate of filling the pipe with water shall be one foot per second or less. The section under test shall be maintained full of water for a period of at least one hour prior to the combined pressure and leakage test being applied.

3. The pressure and leakage test for all pressure pipes shall consist of first raising the water pressure (based on the elevation of the lowest point of the section under test and corrected to the gage location) to **150 psi** and maintain the pressure **for a period of 60 minutes** with no additional pumping. The section shall be considered as having failed to pass the test if the pressure drop is higher than 5 percent.

4. If the section fails to pass the pressure and leakage test, the Contractor shall do everything to locate, uncover and repair or replace the defective pipe, fitting, or joint, all at his own expense and without extension of time for the completion of the work. Additional tests and repairs shall be made until the section passes the specified test.

5. Once the Construction Manager determines that the pressure and leakage test is successful, all testing plugs, caps, reaction blocks, pumps, piping connections, gages, and any other testing appurtenances shall be removed, and the piping in the test areas shall be backfilled in accordance with Section 02222 of these specifications.

6. If, in the judgment of the Construction Manager, it is impractical to follow this test procedure exactly for any reason, modifications to the procedure may be made as approved; but in any event, the Contractor shall be responsible for the ultimate tightness of the line within the above leakage and pressure requirements.

7. For the emergency bypass piping, sections of assembled piping shall be tested before installation. After installation and final connection, the piping shall be properly supported and braced, but left exposed. The piping shall be placed in operation and observed for leaks at least 12 hours each for each operating condition.

3.2 DISINFECTING PIPELINES

A. Pipeline disinfection is to be carried out on all pipelines that will convey potable water. Work is to conform to AWWA C651.

B. Temporary Fittings

   i. The Contractor shall furnish, install and remove all temporary fittings required to disinfect the pipelines.

C. Flushing

   i. Before disinfection, fill pipelines and eliminate air pockets and flush the lines at a velocity of 2.5 feet per second.

D. Chlorination

   i. Potable water shall be made to flow into the new pipe at a constant measured rate. Not more than 10 feet downstream from the beginning of the new pipe, inject chlorine solution at a constant rate such that the water will have not less than 25 mg/l of free chlorine. Measure the chlorine concentration at regular intervals to insure this concentration is maintained. Continue the chlorine application until the entire pipe is filled with the strong chlorine solution. The chlorinated water shall remain in the pipe at least 24 hours. Operate each valve sufficiently to insure all wetted parts are placed in contact with the chlorine solution. At the end of 24 hours, measure the chlorine concentration. The concentration shall be not less than 10 mg/l.

E. Final Flushing

   i. Flush the pipe with potable water until the measured chlorine residual is no greater than that of the potable water, or less than a value acceptable to the Owner.

3.3 BACTERIALOGICAL TESTS

A. The water in the pipe shall be sampled by an approved analytical laboratory and tested for bacteriological contamination. Test results shall be submitted to the Owner. Should the results be unacceptable, the disinfection and testing process shall be repeated at no additional cost to the Owner.

END SECTION

SECTION 15050 – VALVES AND APPURTENANCES

PART 1 – GENERAL

1.1 SUMMARY

A. Provide all valves as shown and specified. In addition, valve actuating units, stem extensions and other accessories shall be furnished and installed where shown. Where buried valves are indicated, provide valve boxes to grade. All valves shall be new and of current manufacture. Shut-off valves 6 inches and larger shall have actuators with position indicators, unless indicated otherwise. Valves which are furnished as parts of factory assembled components are specified with those components.

B. The flanges of valves may be raised or plain faced. Flanges of valves for water working pressures of 175 psi or less shall be faced and drilled to 125 lb. American Standard template. Flanges of valves for water working pressures greater than 175 psi shall be faced and drilled to 250 lb. American Standard template.

C. Grooved valve connections shall conform to AWWA C606.

D. Unless otherwise specified, each valve body shall be tested under a test pressure equal to 150% of its design water working pressure.

E. Unless otherwise specified, all interior bronze parts of valves, except gate valve stems, shall conform to the requirements of ASTM B62. Gate valve stems shall be of bronze containing not more than 5 percent of zinc nor more than 2 percent of aluminum, and shall have a minimum tensile strength of 60,000 psi, a yield strength of 40,000 psi, and an elongation of at least 10 percent in 2 inches, as determined by a test coupon poured from the same ladle from which the valve stems to be furnished are poured.

F. Except where otherwise provided, ferrous surfaces, exclusive of stainless steel surfaces in the water passages of all valves 4 inches and larger, shall be coated with an NSF approved epoxy, in accordance with AWWA C550.

G. Shop drawings of all valves and actuators, including wiring diagrams and electrical data, shall be provided.

H. Where designated, valves shall be furnished with actuators. All actuators of a given type shall be furnished by the same manufacturer as the valves.

I. Valves and actuators in particular locations may require a combination of units, sensors, limit switches, controls and contacts for remote indication or operation specified in other Divisions of these specifications. It shall be the responsibility of the Contractor to properly assemble and install these various items so that all systems are compatible and operating properly. The relationship between interrelated items shall be clearly noted on shop drawing submittals.

J. Valve bodies and valve boxes for underground service shall have a factory-applied 10 mil coating of bituminous material.

K. All exposed assemblage nuts and bolts for 3 inches and larger valves, including nuts and bolts at flanged end connections, shall be of Type 316 stainless steel.

1.2 SUBMITTALS

A. Submit dimensioned catalog data for each valve. Catalog data shall include body material, seal material, connection type, pressure rating, stem material, means of operation, special features such as operators, limit switches and similar devices. Each feature stated in the detailed specifications shall be specifically indicated on each valve submittal. Submit certified results of all factory tests required by AWWA.

B. Submit operation and maintenance manuals.

PART 2 – PRODUCTS

2.1 BUTTERFLY VALVES

A. Butterfly valves shall be resilient seated lug-type butterfly valves. Flanged end valves shall conform to AWWA C504. Lug-type butterfly valves shall be as manufactured by Keystone Tyco. Valves shall conform to the following requirements.

Pressure Rating	250 psig for valves 12 inches and smaller.
Valve Body	Cast iron
Stem	Type 416 stainless steel
Stem Seals	Bi-directional, self-adjusting
Disc	Type 316 stainless steel
Valve Seats	Non-replaceable EPDM, conforming to NSF 61
Top Bushing	Heavy-duty, corrosion resistant, located in upper journal.
Operator	Gear or lever, as indicated

2.2 GATE VALVES 4 INCHES AND LARGER

A. Unless otherwise specified or approved, gate valves larger than 4 inches shall be Class 125 iron body, bronze mounted, resilient-seated gate valves, conforming to AWWA C509 with either bell, mechanical joint, or flanged ends, as indicated on the drawings or specified herein.

B. Exposed gate valves shall be OS&Y type, with flanged ends and 12-inch minimum diameter handwheels. Face to face dimensions of flanged valves shall conform to ANSI B16.1. Coat exposed gate valves to match adjacent pipe.

C. Buried valves shall be provided with valve boxes. Where the operating nut is greater than 3 feet below the top of the valve box, valves shall be furnished with steel extension stems or universal joint operating rods with 2-inch square operating nuts at the upper end and a suitable coupling to connect to the valve stem.

D. Handwheels or operating nuts shall be turned to the left (counterclockwise) to open all valves. Handwheels shall have an arrow and the word OPEN cast thereon to indicate the direction of opening.

2.3 GATE VALVES 3 INCHES AND SMALLER

A. Gate valves shall be class 150 bronze valves with screwed ends. Body material shall conform to ASTM B62. Valves shall have union bonnet, rising stem, inside screw, and solid wedge gate. Stems shall be made of wrought silicon bronze. If the manufacturer does not furnish this stem material in the class specified, the valves shall be furnished in the next higher class in which the stem material is available.

B. PVC valves shall have threaded end connections, or solvent weld connections as indicated on drawings.

2.4 KNIFE GATE VALVES

A. Knife gate valves shall be cast, 316 stainless steel body, chest, and packing chamber. Valves shall be furnished with a stainless steel stem and 316 stainless steel gate. Valve body shall be an integral lugged body in accordance with ANSI 125/150.

B. Valves shall be furnished with gate guides and gate jams to hold the gate securely.

C. Valves shall be furnished with PTFE Impregnated Syntex Fiber with a maximum temperature of 450 degrees Fahrenheit and maximum pressure 150 psi.

D. Valves shall be resilient seated for driptight shutoff. Resilient seat materials shall be acrylonitrile butadiene (NBR).

E. A handwheel with 2-inch nut extension shall be provided as shown on the construction drawings.

F. A 4-inch knife gate valve shall be installed in the aerobic digester as shown on the construction drawings.

G. Acceptable knife gate valve shall be Dezurik GKU Knife Gate Valve or approved equal.

2.5 GLOBE AND ANGLE VALVES 3 INCHES AND SMALLER

A. Valves shall be Class 200 bronze valves with screwed ends. Body material shall conform to ASTM B61. Valves shall have union bonnet, renewable or regrindable stainless steel plug and seat. Stems shall be made of wrought silicon bronze. If the manufacturer does not furnish this stem material in the class specified, the valves shall be furnished in a next higher class in which the stem material is available. Globe valves or angle valves may be used for stop valves for sizes 1 inch and smaller, subject to the approval of the Engineer.

2.6 LEVER SWING CHECK VALVES

A. Lever swing check valves to be Val Matic Series 7800 or approved equal. The valve body shall be full flow equal to nominal pipe diameter area at all points through the valve.

B. Materials of Construction

Valve body and cover:	Ductile Iron ASTM A536
Disc:	Ductile Iron ASTM A536
Body:	ASTM A536 ductile iron
Body Seat:	304 Stainless steel
Resilient body seat:	Buna-N, ASTM D2000-BG
Coating:	Fusion Bonded Epoxy

2.7 BUFFERED SWING CHECK VALVES

A. Swing check valves with bottom mounted buffer to be APCO Model CVS-6000-BMB as manufactured by DeZurik, Inc. or approved equal shall be used at the DHHL North Pump Station.

B. Materials of Construction

Buffer rod:	303 stainless steel

Oil Reservoir:	316 stainless steel
Body:	ASTM A536 ductile iron
Flange:	Class 150 per ASME B16.1
Body Seat	316 Stainless steel
Disc and Disc Arm:	ASTM A536 ductile iron.
Disc Seat:	Nitrile Butadiene
Pivot Shaft:	303 stainless steel

C. Testing of valve by manufacturer including the bottom buffer, per AWWA C508

2.8 PLUG VALVES

A. Except for 3-way valves, plug valves shall be non-lubricated eccentric type with resilient faced plug. Valve shall offer straight through, full “open port” flow operation with the valve open full, and be capable of drip tight bidirectional shut off at the rated pressure with quarter-turn rotary operation from full open position. All nuts, bolts, springs and washers shall be stainless steel. Valve body shall be provided with a 1/8-inch welded overlay seat of not less than 90 percent nickel raised to ensure that the plug face contacts only nickel. Plug shall have a cylindrical seating surface eccentrically offset from the center of the plug shaft. The interference between the plug face and body seat, with the plug in closed position, shall be externally adjustable in the field with the valve in the line under pressure. Plug shall be resilient faced with material noncorrosive to exposure to sewage or sewage gas. Valve shall have replaceable sleeve type metal bearings and shall be sintered, oil impregnated permanently lubricated stainless steel. Valve shaft seals shall be externally adjustable and repackable without removing the bonnet or actuator from the valve under pressure.

B. Plug valve end connections shall be flanged. End flanges shall be integral with the valve body and be faced and drilled in accordance with ANSI B16.1 for 125-pound flanges.

C. Valves shall be equipped with worm-geared operated handwheel actuators. All gearing shall be totally enclosed in a semi-steel housing and be suitable for running in a lubricant with seals provided on all shafts to prevent entry of dirt and water into the actuator. The actuator shaft and the quadrant shall be supported on permanently lubricated bronze bearings. Actuator shall clearly indicate valve position and adjustable stop shall be provided to set closing torque and provide seat adjustment to compensate for change in pressure differential. All exposed nuts, bolts and washers shall be stainless steel.

D. Install plug valves in the horizontal position

2.9 3-WAY PLUG VALVES

A. Acceptable valve shall be Dezurik Three Way Plug Valve Combination 3 style or approved equal.

B. Three-way plug valves shall be cast iron non-lubricated tapered type with single tapered resilient faced plug. Valve shall offer straight through and 90 degree flow combinations, and be capable of dead-tight shutoff at the rated pressure with a lift, turn and reseat double handwheel actuator. All nuts, bolts, springs and washers shall be stainless steel. Plug shall be resilient faced and comprised of hard natural rubber with soft rubber chloroprene plug overlay to provide dead-tight shutoff. Valve packing shall be Acrylonitrile-Butadiene.

C. Plug valve end connections shall be flanged. End flanges shall be integral with the valve body and be faced and drilled in accordance with ANSI B16.5 for 150-pound flanges. Valves shall be equipped with worm-geared operated double handwheel actuators. All gearing shall be totally enclosed in a semi-steel housing and be suitable for running in a lubricant with seals provided on all shafts to prevent entry of dirt and water into the actuator. The actuator shaft and the quadrant shall be supported on Type 316 stainless steel bearings. Actuator shall clearly indicate valve position and adjustable stop shall be provided to set closing torque and provide seat adjustment to compensate for change in pressure differential.

2.10 BALL VALVES

A. Non-lubricated free-floating ball type, suitable for service in sludge piping. Port areas shall be full bore (free area through valve not less than inside area of a pipe of nominal valve size).

B. Bodies shall be of Type 316 stainless steel, and suitable for 200 psig water working pressure. Balls shall be made of Type 316 stainless steel, precision machined.

2.11 COMBINATION AIR RELEASE VALVES

A. Combination air valves shall be APCO model ASU as manufactured by Dezurik or approved equal. Combination Air Valves shall be single body design and shall provide both air release and air/vacuum valve functions.

B. Valves shall close tightly at any pressure between 2 and 300 psi without leaking or spilling. The Air/Vacuum inlet and outlet areas shall meet the flow area requirements set forth in AWWA C512. In any case, the smallest cross-sectional area must define the size of the valve.

C. Materials of Construction

Body, float, hardware:	316 stainless steel
Piston stem and seat:	17-4 PH stainless steel
Seals:	Acrylonitrile-butadiene
Piston stem guides:	Acetal
End Connections:	NPT or ANSI 120/150 flanged

D. Warranty

Two years for all valves

2.12 SURGE RELIEF VALVE

A. All valves shall be APCO model SRA-3000A Surge Relief Angle Valves as manufactured by DeZURIK or approved equal.

B. Surge Relief Angle Valves shall be normally closed against the system pressure by external spring(s) in compression and shall open quickly to relieve pressure when the system pressure exceeds the pressure relief setting. The pressure relief setting shall be factory set and field adjustable by adjusting the spring compression. The valve will begin to close when the system pressure subsides below the pressure relief setting. The closing speed shall be adjustable to suit the application by means of infinitely adjustable, lockable flow control valve.

C. Body shall be a 90 degree elbow design conforming to the center-to-face dimension for long-radius elbows per ASME B16.1 and ASME B16.42. Valve shall be a compact design to fit in tight installation spaces.

D. Body and cover shall be constructed of ASTM A536 Grade 65-45-12 ductile iron. Body Seat shall be 316 stainless steel. Flanges shall be flat faced and conform to ASME B16.42 Class 150. Valve shall be proof-of-design tested to 5,000 cycles.

E. A self-contained, sealed hydraulic system shall provide closing speed control. The valve cover shall provide an air gap between the line fluid and the hydraulic oil that will indicate seal wear and prevent contamination of line fluid or hydraulic oil. The valve shall be capable of being mounted in any position without modification or customization of the hydraulic system components. A mechanical stroke counter with manual reset shall provide local indication of total valve cycles.

F. External spring(s) located on the valve cover in a protective steel enclosure shall provide closing force. Springs shall be sized to provide a pressure relief set point at 130 psi. An adjustment screw shall be provided for field adjustment of relief pressure setting.

G. Valve Disc shall have a replaceable seat ring of Terpolymer of Ethylene Propylene and A Diene (EPDM).

2.13 SLIDING VALVE BOXES

A. Buried stops and valves shall be provided with suitable valve boxes. Unless indicated otherwise, boxes shall be of the adjustable, telescoping, heavy pattern type with the lower part of cast iron and the upper part of steel or cast iron. The boxes shall be adjustable through at least 6 inches vertically without reduction of the lap between sections to less than 4 inches. The inside diameter of boxes shall be at least 4-1/2 inches, and the lengths shall be as necessary for the depths of the valves or stops with which the boxes are to be used.

B. Covers for valves shall be close fitting and substantially dirt-tight. The top of the cover shall be flush with the top of the box rim.

2.14 COATING FOR UNDERGROUND VALVES AND VALVE BOXES

A. Valve bodies and valve boxes for underground service shall have a factory applied 10 mil coating of bituminous material.

2.15 FLANGED COUPLING ADAPTER

A. Flanged coupling adapters shall be of high grade grey cast iron or ductile iron body and follower, rubber or neoprene O-ring and gasket, and Type 316 stainless steel bolts and nuts.

B. Flanged adapters shall be Dresser Style 227, Smith-Blair Type 912, Romac FCA 501, or approved equal. Adapters shall be suitable for use with cast-iron flanged pipes with ANSI B16.1, 125-pound Flanges. Adapters shall be designed to accommodate pipe offsets up to 7/16 inch, axial movement up to 3/16 inch and deflection up to 3 degrees.

C. Restrained flanged coupling adapters shall be made of ductile iron conforming to ASTM A536 and have flange bolt circles that are compatible with ANSI/AWWA C110/A21.10. Restraint for the flange adapter shall consist of a plurality of individual actuated gripping wedges to maximize restraint capability. The flange adapter shall be capable of deflection during assembly, or permit lengths of pipe to be field cut, to allow a minimum of 0.6” gap between the end of the pipe and the mating flange without affecting the integrity of the seal. For PVC pipe, the flange adapter will have a pressure rating equal to the pipe. For ductile iron pipe, the flange adapter shall have a safety factor of 2:1 minimum. The flange adapter shall be the SERIES 2100 MEGAFLANGE adapter, as produced by EBAA Iron, Inc., or approved equal. Coating system shall be mega-bond by EBAA Iron, Inc. or approved equal.

2.16 GAUGES

A. Gauges shall be of the combination pressure/vacuum type and shall operate on the Bourdon principle. Face diameter shall be 5 inches. Movement and socket shall be Type 316 stainless steel. Bourdon tube shall be Type 316 stainless steel. Accuracy shall be ±2 percent across the range -15 to +200 psig. Gauges shall be equipped with Type 316 stainless steel diaphragm isolators, pressure snubbers, and Type 316 stainless steel shutoff valves. Gauges shall be mounted in bossed, tapped flanges or bossed, tapped pipe, unless indicated otherwise.

2.17 WYE STRAINERS

A. Wye strainers shall be provided ahead of any control valves, regulators and where shown. They shall have cast iron or bronze body, stainless steel screens and screwed ends for size 3 inches and smaller, and flanged ends for sizes greater than 3 inches. They shall be designed for 250 psi working pressure in sizes 3 inches and smaller; and 125 psi working pressure in sizes over 3 inches. Strainers shall be Y-pattern, Armstrong Figs. 6 and 7, a similar item manufactured by Crane, or equal.

2.18 UNDESIGNATED SMALL VALVES

A. All valves not designated on the drawings as to type shall be subject to approval of the Engineer. Valves including check valves on metal pipelines smaller than 3 inches shall be brass or bronze valves Class 125 with ends as shown on the drawings.

2.19 SLEEVE COUPLINGS

A. Solid sleeve coupling shall be Smith Blair Omni 441 or approved equal. The coupling shall have follower flanges and a sleeve that is made of cast ductile iron in accordance with ASTM A-536. The gasket shall be Nitrile Buna N NSF 61listed, compounded to resist water, oil acids, alkalies, most (aliphatic) hydrocarbon fluids and many other chemicals. Nuts, bolts, and other fasteners shall be Type 316 stainless steel. The follower flanges and interior and exterior of the coupling shall be provided with an epoxy coating.

2.20 PRE-CAST CONCRETE VALVE BOXES

A. Smaller buried valves shall be of the Maui Department of Water Supply standard pre-cast concrete type.

2.21 BALL CORPORATIONS

A. Unless otherwise shown, ball corporations shall be the standard of the Maui County Department of Water Supply.

2.22 UNIONS

A. Unions shall be brass or bronze – or PVC if used in conjunction with PVC pipe - either threaded or with solder joint ends, conforming to Fed. Spec. WW-U-516 for use in copper tubing. For use in steel piping, unions shall conform to Fed. Spec. WW-U-531. Type, style and class to be suitable for intended use.

2.23 HOSE BIBBS

A. Shall be 3/4-inch rough brass.

2.24 BACKFLOW PREVENTER

A. Backflow preventers shall be installed in potable waterlines where required by applicable codes or regulations, or wherever there is any danger of contamination, or where shown on the drawings. Backflow preventers shall work on the reduced pressure principle. They shall consist of 2 spring-loaded check valves, automatic differential pressure relief valve, drain and shutoff valves. The body material shall be bronze or cast iron for a working pressure of not less than 150 psi, with bronze or stainless steel trim. Drain lines with air gaps shall be provided. Units shall conform to AWWA C506. Backflow preventers shall be Cla-Val Model RP-2/4, or equal.

2.25 EMERGENCY SHOWER AND EYEWASH

A. Emergency showers and eyewash shall be a Guardian Equipment, Model GC1902SC-HFC, or equal, free-standing safety station with self-closing ball valve on shower, and with corrosion resistant epoxy coating applied to entire unit. Shower head shall be 10” safety orange ABS plastic shower head, which delivers 30 gpm at 30 psi. Eyewash bowl shall be 11-1/2” stainless steel bowl.

2.26 SADDLES

A. Saddles shall be used for $\geq$ 1” ductile iron pipe taps, $\geq$ ¾” Schedule 10 steel pipe taps and $\geq$ ½” Schedule 40 PVC pipe taps. This requirement shall be for all taps, not just at chemical injection. Saddles shall be Type 316 stainless steel service saddles, except for saddles on 6” or smaller Schedule 40 PVC pipe, which may be Schedule 40 PVC saddles.

PART 3 – EXECUTION

3.1 INSTALLATION

A. General

i. Install valves with stems vertical. Do not allow pipe to place excessive strain on the valve body. Do not deflect valves to meet pipe. Underground valves and valves otherwise indicated shall have extensions to within 18 inches of the surface. For valves in pits, the operating nut must be concentric with the

opening in the pit cover. After installation, valves must operate smoothly and freely to form a seal which does not leak. All joints must be watertight. Valve bonnets must not weep or drip.

B. Gate Valves

i. Install gate valves in accordance with AWWA C500, Appendix A. Valves with cracked or broken bodies, or scored seating surfaces, or with bent or missing parts will be removed from the site and replaced with new valves at no additional cost to the Owner. Before testing, operate each valve through a complete cycle of fully closed to fully open to insure smooth, free operation. Support valves in such a manner that no tendency to bending is present.

C. Butterfly Valves

i. Install butterfly valves in accordance with AWWA C504, Sections B.4 and B.5. Clean the interior of each valve. Remove all foreign matter from the seat and from the disc by careful cleaning. Insure that the valve disc, when open, does not contact the pipe port. Do not bend or deflect any valve. Adjust actuators for smooth, even operation without slamming. Operate the valve through one complete cycle before testing.

D. Backflow Preventers

i. Install in accordance with the details on the drawings and the manufacturer's printed instructions. Provide necessary temporary supports to avoid stressing or springing the assembly. Make all adjustments required by the manufacturer's instructions. Do not test the unit until thrust blocks are in place and cured.

E. Check Valves

i. Install check valves with the flow direction horizontal. Insure that the check valve orientation corresponds to the direction of flow. Fit up valve without springing or forcing pipe.

F. Plug Valves

i. Valves shall be installed with the stem in the horizontal position. In vertical piping, the plug shall swing upwards when opening to permit flushing out of solids. The flow direction through the installed valve shall be such that the valve body cannot fill up with incoming solids when the valve is closed. Valves where closure for extended periods is indicated (stand-by, bypass, or drain lines), and valves where reversed flow is indicated (higher pressure on downstream side forcing the plug away from its seat) shall include worm gear operators for sizes 4 inches and larger.

G. Ball Valves

i. Install with the stems vertical. Operate each valve through one complete cycle before testing. Wipe clean the interior of each valve at the seals before closing up the joints. Insure that ports are clean and free of obstructions. Operate finished water ball valve with electric actuator both manually and automatically to the satisfaction of the Engineer to demonstrate proper operation as intended.

H. Testing

i. As part of the piping system, each valve joint shall be leak tested with the valve fully open at the time the pipe is tested. Repair visible leaks at no additional cost to the Owner. After the pipelines have been successfully tested, each water valve shall be individually tested for its ability to fully seal the pipeline. The upstream side of the closed valve shall be filled with water and all air removed from the line. The line shall be pressurized to 150 psi, or less if allowed by the Engineer, and held for 2 hours. Leakage as defined in Section 15020, TESTING AND DISINFECTING shall not exceed the amount permitted in that section. There shall be no visible drips or sweating at the seals of the valves. Correct all leaks at no additional cost to the Owner and repeat the test. Do not pressure test butterfly valves in the reverse flow direction.

END SECTION

SECTION 15054 – HORIZONTAL DIRECTIONAL DRILLING

PART 1 – GENERAL

1.1 SUMMARY

A. Scope

i. Contractor shall design, furnish, and install the proposed force main and gravity sewer hereafter referred to as utilities by Horizontal Directional Drilling (HDD) construction methods, as shown on the drawings and conforming to these specifications. The work includes, but is not limited to, geotechnical investigations, design, excavations, dewatering, removal of all materials encountered in the drilling operations, disposal of all material not required in the work, grouting bulkheads, testing, cleaning, and incidentals as shown on the drawings and as specified herein.

ii. Contractor shall be responsible for installing the sections(s) of the utilities, as identified on the drawings, utilizing Horizontal Directional Drilling. The HDD process begins with boring a small, horizontal hole (pilot hole) under the crossing of the obstacle (i.e. creek, highway, railroad) with a continuous string of steel drill rod. The drill rod exits on the opposite side of the obstacle, at a predetermined location. Based on the diameter of the utilities and the ground conditions encountered, the contractor shall create a bore path by connecting to the previously installed drill rods, an auger and back reamer. Various sizes may be utilized until the desired bore path size is achieved. The number of passes of the various sizes of augers and back reamers shall be as determined by contractor. The utilities is pulled back with a special cutting tool, or “reamer”, through the borehole and exits back at the entry pit. The intent of the process shall minimize surface disruption by utilizing the cartridge installation method. This method is characterized by the assembling of flexible restrained joint pipe and pulling-back one joint at a time.

iii. Contractor is responsible for any necessary geotechnical/subsurface investigations required to establish the appropriate parameters (i.e. limiting pressures, setback distances, depth of cover, etc.) for completing the design horizontal directional drilling alignment.

B. General

i. Contractor shall be responsible for the final design and constructed product, and for furnishing the design data, permits, qualified labor and superintendence necessary for this method of construction.

ii. Contractor shall furnish all items necessary to perform the HDD operation and construct the pipe to the lines and grade shown on the drawings.

iii. The Work includes, but is not limited to, the following:

a. All types and sizes of horizontally drilled utilities except those specified under other sections or other contracts.

b. Supports, restraints and thrust blocks.

c. Installation of all flexible restrained joint pipe and gasketing materials, specials, flexible couplings, mechanical couplings, harnessed and flanged adapters, sleeves, tie rods, polyethylene encasement, temporary construction, and all other Work required to complete the horizontally drilled utilities installation.

d. Incorporation of valves, and special items shown or specified into the piping systems as required and as specified in the appropriate Division 15 sections.

C. Coordination

i. Review construction sequencing and installation procedures under other sections.

ii. Contractor is responsible to coordinate between other construction contracts that may be ongoing simultaneously.

1.2 RELATED WORK

A. Section 02222 Excavation, Backfilling, and Compacting for Utilities (Sitework)

B. Section 03200 Concrete Reinforcement

C. Division 15

1.3 QUALITY ASSURANCE

A. Reference Standards: Comply with provisions and recommendations of the following, except as otherwise shown or specified.

i. AWWA Manual of Practice M41 – Installation of Ductile Iron Pipe.

ii. Latest edition of AWWA C150, AWWA C151, AWWA C105.

B. Contractor must demonstrate expertise in Horizontal Directional Drill methods by providing a list of ten utility references for which similar work has been performed in the last two years. The reference should include a name and telephone number where contact can be made to verify the contractor's capability. The contractor must provide documentation showing successful completion of the project [suited] for reference. Conventional trenching experience will NOT be considered applicable.

C. Contractor shall have installed directionally drilled pipe at least as large as the diameter proposed herein and have performed water body crossings and crossing of flood control levees.

D. All supervisory personnel must be adequately trained and will have at least ten (10) years of experience in directional drilling. Contractor shall submit the names and resumes of all supervisory field personnel prior to the start of construction.

1.4 SUBMITTALS

A. Owner or Owner's Representative will base the review of submitted details and data on the requirements of the completed work, safety of the work in regards to the public, potential for damage to public or private utilities and other existing structures and facilities, and the potential for unnecessary delay in the execution of the work. Such review shall not be construed to relieve the contractor in any way of his responsibilities under the contract. Contractor shall not commence work on any items requiring contractor's construction drawings or other submittals until the drawings and submittals are reviewed and accepted by the Owner or Owner's Representative. A maximum thirty (30) day review period will be required.

B. The Contractor, prior to construction, shall prepare and submit for information the following:

i. Horizontal Directional Drilling Plan describing the equipment, methods, procedures (pilot hole drilling, insertion, reaming, pullback, coating protection, internal cleaning, internal gauging, dewatering, purging, grouting, etc.), monitoring procedures (pressures, depth, alignment, placement, entrance and exit points, etc.), construction sequence, construction scheduling, contingency plans, and other items of concern to be performed during the horizontal directional drilling process.

ii. Project Safety Plan

iii. Arrangement drawings and technical specifications of the drilling machine and ancillary equipment (including any modifications), three-year experience record with this type of drilling machine, and a copy of the manufacturer's operation manual for this machine.

iv. Contractor's construction drawings, specifications, and contingency plans shall be submitted for the following items:

a. Complete details of the site clearing and equipment mobilization plan (Site Preparation Plan) including, but not limited to, the methods, procedures, and equipment arrangement to be used during the clearing and mobilization of the equipment onto the site.

b. Complete design details and calculations of the significant parameters and constraints associated with directional drilling operations including, but not limited to: expansion/contraction, limiting overburden/critical pressures, drilling fluid mixtures and limiting pressures, drilling/boring speed, hydrostatic tests and cleaning procedures.

1. Complete details of grouting techniques of the annulus between the pipeline and the directional-drilled shaft (adjacent soil), including equipment, pumping procedures, pressures, mixtures, and plug systems.

2. Method of monitoring and controlling the mud and bore hole pressures during all drilling operations.

3. Method of monitoring and controlling the specified speed, line, and grade of excavation including, but not limited to, the methods, procedures, reliability, and necessary equipment to be used during the directional drilling operations.

4. Complete details of the muck/spoils containment, dewatering, drying, and removal methods, procedures, equipment, contingency plan, and off-site disposal location.

5. Complete details of the methods, procedures, and equipment arrangement to be used during the flexible restrained joint ductile iron pipe storage, assembly, installation, cleaning, and testing.

6. Proposed contingency plans for the protection of the creek, river, floodwall/levee, and other underground structures including, but not limited to, the complete details of the methods/procedures, equipment to be used, etc. for critical phases and areas of the directional drilling operations.

7. Statement by pipe manufacturer indicating that they have reviewed the design drawings and the contractor's proposed methods and agree that the pipe proposed is suitable for the application. This certification shall include recommended manufacturer's pulling loads and any other limitations or restrictions.

c. Drawings and calculations for all sheeting and/or shoring proposed. These shall bear the seal of a Professional Engineer licensed to practice in Hawaii.

C. Quality Control Methods

i. At least 10 days prior to the start of directional drilling, Contractor shall submit a description of the quality control methods he proposes to use in the

directional drilling operations to the Owner or Owner's Representative. The submittal shall describe:

a. Procedures for controlling and checking line and grade.

b. Field forms for establishing and checking line and grade

D. Safety

i. Procedures including, but not limited to, monitoring for gases encountered shall be submitted.

E. Hazardous chemical list as well as all MSDS and technical data sheets.

F. Contractor is required to bring to the attention of the Owner or Owner's Representative any known discrepancies with actual tunneling methods that the contractor will be performing. This shall be stated, in writing, to Owner or Owner's Representative no later than the pre-construction meeting.

G. Record Drawings

i. Contractor required to submit certification, by a Professional Engineer licensed in the State of Hawaii, that the directional drilling has been performed in accordance with the construction drawings, or provide signed and sealed record drawings of the installation if it varies from the design as shown in the construction drawings.

ii. Submit record drawings prior to the time of Substantial Completion.

1.5 PRODUCT DELIVERY, STORAGE, AND HANDLING

A. Deliver materials to the site to ensure uninterrupted progress of the Work.

B. During delivery and handling, all materials shall be braced and protected from any distortion or damage; any such distortion or damage shall be basis for rejection of the materials.

C. Equipment used for unloading shall be covered with wood or rubber to avoid damage to the exterior of the pipe, fittings, and accessories. Furthermore, all ductile iron pipe requiring polyethylene encasement, where polyethylene has been field pre-applied to the pipe shall be handled with suitably padded equipment to prevent damage to the polyethylene prior to installation. Do not drop or roll materials off trucks. All ductile iron pipe and fittings shall be handled with padded slings or other appropriate equipment. The use of cables, hooks, or chains will not be permitted.

D. The materials shall be inspected before and after unloading. Materials that are found to be cracked, gouged, chipped, dented, or otherwise damaged will not be accepted.

E. Interiors of pipe, fittings, and accessories shall be kept free from dirt and foreign matter.

F. Store pipe and fittings on soil berms, heavy wood blocking, or platforms of other construction to they are not in contact with the ground.

G. Pipe, fittings, and specials shall be unloaded opposite to or as close to the place where they are to be used as is practical to avoid unnecessary handling.

H. Contractor shall at all times handle the pipe in a manner that does not overstress the pipe.

PART 2 – PRODUCTS

2.1 MATERIALS

A. General

i. Pipe for Horizontal Directional Drilling (HDD) construction shall be Ductile Iron, Class as identified on the plans, flexible restrained joint pipe with a spigot retainer weldment.

ii. Ductile iron pipe shall be installed with a double polyethylene encasement.

iii. All ductile iron pipe, fittings, and accessories must be new materials in firs-class condition. Used or recycled pipe, fittings, specials, or accessory materials shall not be allowed, regardless of condition.

iv. All ductile iron pipe shall be supplied from one manufacturer.

PART 3 – EXECUTION

3.1 INSTALLATION

A. General

i. In addition to notifying Owner or Owner's Representative for utility markout, any utility within 10 feet of the centerline of the borepath shall be surfaced marked at appropriate intervals to verify the horizontal and vertical location. Contractor shall install the flexible restrained joint ductile iron pipe by means of HDD using the cartridge installation method as described in section 1.1A.ii, specified, and not exceeding the allowable pulling loads as recommended by the manufacturer.

ii. Contractor shall be responsible for his means and methods of HDD construction and shall ensure the safety of the Work the Contractor's employees, the public, and adjacent property, whether public or private.

iii. Contractor shall comply with all local, state, and federal laws, rules, and regulations at all times to prevent pollution of the air, ground, and water.

iv. If there is a conflict between manufacturer's recommendations and the Drawings or Specification, request instructions from Owner or Owner's Representative before proceeding.

B. Launching and Receiving Pits

i. Contractor shall excavate, sheet, shore, dewater, and perform all other work necessary to provide adequate launching and receiving pits for his HDD operations.

ii. All work shall be performed in strict accordance with OSHA regulations.

iii. All sheeting, shoring, and bracing shall be designed by a Hawaii State licensed Professional Engineer.

iv. Temporary fencing shall be provided around each pit. Fencing shall be a minimum of 4 feet in height. Fencing materials, layout, and installation details shall be subject to approval by the Owner or Owner's Representative.

v. Upon completion of HDD operations, all pits shall be backfilled and surface restored as specified in Sections 02221, Excavation, Backfill, and Compacting for Structures.

C. Drilling Operations

i. Directional drilling/boring shall use techniques of creating or directing a borehole along a predetermined path to a specified target location. This involves use of mechanical and hydraulic deviation equipment to change the boring course and shall use instrumentation to monitor the location and orientation of the boring head assembly along a predetermined course.

ii. Drilling shall be accomplished with fluid assisted mechanical cutting. Drilling/boring fluids shall be an appropriate mixture of either bentonite and water or polymers and additives with water. Bentonite sealants and water will be used to lubricate and seal the mini-tunnel. It is mandatory that minimum pressures and flow rates be used during drilling operations so as not to fracture the sub-grade material around and above the bore ("frac-out").

iii. Contractor shall have a mobile vacuum spoils recovery system/vehicle on-site to remove the drilling spoils from the access pits. The spoils must then be transported from the job site and be properly disposed of. Under NO circumstances shall the drilling spoils be permitted to be disposed into waterways, sanitary, storm, or any other public or private drainage system.

iv. The mobile drilling system shall utilize small diameter fluid jets to fracture and mechanical cutters to cut and excavate the soil as the head advances forward. Mechanical, pneumatic, or water-jetting methods will be considered unacceptable.

v. Steering shall be accomplished by the installation of an offset section of drill stem that causes the cutterhead to turn eccentrically about its centerline when it is rotating. When steering adjustments are required, the cutterhead offset section is rotated toward the desired direction of travel and the drill stem is advanced forward without rotation.

D. Tolerances

i. Contractor shall plot the actual horizontal and vertical alignment of the pilot bore at intervals not exceeding 20 feet. This “as-built” plan and profile shall be updated as the pilot bore is advanced.

ii. Each exit point shall be located as shown with an over-length tolerances of 10 feet for directional drills of 1,000 linear feet or less and 20 feet for direction drills greater than 1,000 linear feet. Alignment tolerance of 5 feet left/right with due consideration of the position of the other exit points.

iii. The Contractor shall at all times provide and maintain instrumentation that will accurately locate the pilot bore/hole and measure drilling fluid flow and pressure.

iv. Contractor shall provide and grant Owner or Owner’s Representative access to all data and readout pertaining to the position of the bore and fluid pressures and flows. No information pertaining to the position or inclination of the pilot bore holes shall be withheld from the Owner or Owner’s Representative.

E. Ream and Pullback

i. After an initial bore has been completed, a reamer will be installed at the termination/exit pit and the pipe will be pulled back to the starting/entry pit. The reamer must also be capable of discharging liquid clay/bentonite mixture to facilitate the installation of the pipe into a stabilized and lubricated tunnel.

ii. Reaming operations shall be conducted to enlarge the pilot hole after acceptance of the pilot bore. The number and size of such reaming operations shall be conducted at the discretion of the contractor. Under no circumstances shall there be less than two progressively larger reamers enlarging the borehole prior to the final reaming/pull-back begins.

iii. The pulling thrust exerted on the pipe shall be measured continuously and limited to the maximum allowed by the pipe manufacturer so that the pipe or joints are not overstressed.

iv. A swivel shall be used to connect the utilities to the drill rods to prevent torsional stresses from occurring in the pipe.

v. The lead end of the pipe shall be closed during the pullback operation.

vi. Ductile iron pipe shall be assembled utilizing the “cartridge method”. As each section of pipe is joined and poly-wrapped, the pipe string shall be advanced into the drill hole a sufficient distance to allow joining of another length of pipe. This sequence shall be repeated as necessary until the entire pipe string has been pulled back.

vii. The utility shall be adequately supported by rollers and/or side booms and monitored during installations so as to prevent overstressing or buckling during the pullback operation.

viii. Support/rollers shall be comprised of a non-abrasive material arranged in a manner to provide support to the bottom and bottom quarter points of the utilities allowing for free movement of the utilities during pullback.

ix. Upon completion of pullback of the entire pipe string, the contractor shall conduct a low-pressure air test to demonstrate the integrity of the pipe joints. This test shall be 15 minutes in duration and be witnessed by the Owner or Owner’s Representative or his representative

F. Grouting (Annular space between the installed pipe and the adjacent soils)

i. Grouting of the annular space between the pipe and the adjacent soils with a cement or bentonite-cement mixture is required at both ends of the alignment.

ii. The grouting is to be completed immediately after the piping alignment is pulled back.

iii. The grouting procedure consists of inserting grout tubes at each outside quadrant of the pipe into the annular space as far as possible. The grout mixture is then pumped into the annulus until grout returns to the surface at the entry.

iv. Grouting pressures are to be lower than the overburden pressure or critical pressure required to initiate hydraulic fracturing.

v. Grouting pressures are to be continuously monitored and carefully controlled to minimize the risk of hydrofracture.

G. Handling Drilling Fluids and Cuttings

i. Contractor shall make adequate provisions for handling the drilling fluids or cuttings at the entry and exit pits. Drilling fluids and/or cuttings shall not be discharged into the waterway.

ii. Materials shall be hauled off-site to a suitable and legal disposal site.

iii. Contractor shall conduct the directional drilling operations in such a manner that drilling fluids and cuttings are not forced into the subbottom of the waterway.

iv. Pits constructed at entry and exit point areas shall be so constructed to completely contain the drill fluid and prevent escape to the waterway.

v. The Contractor shall utilize drilling tools and procedures, which will minimize the discharge of any drill fluids. Contractor shall comply with all mitigation measures listed in the required permits and elsewhere in these specifications.

vi. Contractor shall minimize drilling fluid disposal quantities by utilizing a drilling fluid plan, which allows the returned fluids to be reused.

vii. As part of the installation plan specified herein before, the contractor shall submit a drilling fluid plan, which details types of drilling fluids, cleaning and recycling equipment, estimated flow rates, and procedures for minimizing drilling fluid escape.

viii. Upon completion of the boring and pipe installation, the contractor will remove all spoils from the pits and site. All pits will be restored to their original conditions.

3.2 WORK AFFECTING EXISTING PIPING

A. Location of Existing Piping

i. Locations of existing piping shown should be considered approximate.

ii. Contractor shall determine the true location of existing piping to which connections are to be made, and location of other facilities which could be disturbed during earthwork operations, or which may be affected by contractor’s work in any way.

3.3 TESTING OF PIPING

A. Refer to Section 15020, Testing for hydrostatic/pressure testing specifications.

3.4 CLEANING, FLUSHING, AND ABANDONMENTS

A. General

i. Refer to Section 15020, Testing for cleaning and flushing specifications.

ii. All horizontal directionally drilled utilities shall be cleaned and hydrostatically tested prior to any tie-in connections with associated piping.

B. The entire site shall be restored to a condition equal to or better than what existed prior to the Work.

C. Comply with all permit requirements for post construction certification and/or inspections.

END SECTION

SECTION 15060 – PIPING

PART 1 – GENERAL

1.1 SUMMARY

A. Work in this section shall include pipes and fittings for waterlines, and other incidental piping. Valves are specified in Section 15050 Valves and Appurtenances.

1.2 SUBMITTALS

A. Submit shop drawings for all pipes and fittings including certification of conformance to specified standards.

PART 2 – PRODUCTS

2.1 DUCTILE IRON PIPE

A. Conform to ANSI/AWWA C151 for pipe. Aboveground pipe shall be Class 53, with ductile iron flanges, and buried pipe shall be Class 52 unless otherwise indicated in the Contract Drawings. The 10” force main shall be Class 54. Pipe shall be centrifugally cast ductile iron of the sizes shown. End connections shall be as shown on the drawings and described herein.

B. Conform to ANSI/AWWA C110. ANSI/AWWA C153 compact fittings are not acceptable. Fittings shall be push-on joint, mechanical joint, or flanged in accordance with the drawings and shall be rated for 250 psi. Gaskets for mechanical joint and push-on joint pipe shall conform to ANSI/AWWA C111 and shall conform to the pipe manufacturer's standard dimensions and tolerance. Lubricant for gaskets shall be recommended by the manufacturer. Flanges shall be ANSI/AWWA C115 threaded 125 lb. ductile iron flanges rated for 250 psi. Grooved joints shall have mechanically cast grooves with butyl rubber gaskets and malleable iron bolted couplings and shall conform to ANSI/AWWA C606. Nuts, and bolts for flange connection shall be of stainless steel.

C. Lining

i. Ductile iron pipe and fittings shall have a 1/16-inch cement mortar lining on all interior surfaces. Lining shall conform to ANSI/AWWA C104.

D. Coating

i. Ductile iron pipe and fittings for buried service shall have a 1 mil asphalt coating conforming to ANSI/AWWA C151 applied at the factory.

ii. Ductile iron pipe and fittings for aboveground and interior service shall be cleaned by brush blasting and prime coated with metal primer as specified in Section 09900, PAINTING.

E. Polyethylene Wrap

i. Polyethylene wrap for ductile iron pipe and fittings shall conform to ANSI/AWWA C105.

F. Gaskets

i. Unless otherwise specified, gasket stock shall be a synthetic rubber compound in which the elastomer is nitrile or neoprene. The compound shall contain not less than 50 percent by volume nitrile or neoprene and shall be free from factice, reclaimed rubber and other deleterious substances.

G. Joints

i. Flange Assemblies: Flanges shall be ductile iron and shall be threaded-on flanges conforming to ANSI/AWWA A21.15/C115 or cast-on flanges conforming to ANSI/AWWA A21.10/C110. Flanges shall be adequate for 250 psi working pressure minimum. Bolt circle and bolt holes shall match those of ANSI B16.1, Class 125 flanges and ANSI B16.5, Class 150 flanges. Where specified, flanges shall be threaded-on or cast-on flanges conforming to ANSI B16.1, Class 250. Gaskets shall be as specified in paragraph 15085-2.03.

ii. Push-on joints: Pipe shall be U.S. Pipe, Tyton Joint Pipe with Tyton Gaskets, or approved equal.

iii. Mechanical Joints: Restrained mechanical joints shall be provided on buried fittings and bends connected to PVC pipe. Mechanical joint restraint shall be EBAA Inc. Series 2000 MegaLug or approved equal.

H. Bolts and Nuts

i. Bolts and nuts shall be Type 316 stainless steel in conformance with ASTM F593 for bolts and ASTM F594 for nuts. Bolts shall be threaded to conform to ANSI B 18.2.1, page C-1 for finished hex bolts. Nuts shall conform to ANSI B18.2.2, page D-1. Nuts shall be finished with TRIPAC 2000 coating system to minimize galling and ensure proper torque. All bolt heads and nuts shall be hexagonal. Identification on the head of the bolt shall be T-316, 316, F593G or F593H.

I. Pipe Lining

i. Interior surfaces of ductile iron pipe and fittings shall be lined with Protecto 401 Ceramic Epoxy per manufacturer's recommendations.

2.2 PLASTIC PIPE

A. Schedule 40 and 80 PVC Pipe

i. Pipe shall conform to ASTM D1785, and shall be of Schedule 40 or 80, as indicated. Minimum burst pressure shall conform to Table 6 of ASTM D1785 for the pipe sizes shown on the drawings. Maximum fiber stress at burst pressure to be 5000 psi. Pressure rating shall be not less than 210 psi and 280 psi, respectively for Schedule 40 and 80 pipe, at 73° F for unthreaded pipe.

ii. Fittings shall be of same schedule as adjoining pipe, and shall conform to ASTM D2467 for socket type IPS size fittings. Fiber stress at burst pressure shall be 5000 psi at 73° F.

iii. Solvent cement for PVC pipe shall conform to ASTM D2564 and shall consist of a solution of Class 12454-B unplasticized PVC material. Cement shall be free-flowing without lumps or undissolved particles and shall show no gelation. Color shall not be orange.

B. Schedule 80 CPVC Pipe

i. Pipe shall be produced from CPVC, cell classification 23447, conforming to ASTM D1784. Socket type fittings shall conform to ASTM F439.

ii. CPVC flanges shall meet CL 150 bolt pattern specifications per ANSI B16.5, and shall be rated for a maximum internal pressure of 150 psi, non-shock at 73 degrees F.

iii. Solvent cement for CPVC pipe shall conform to ASTM D2564 and shall consist of a solution of Class 12454-B unplasticized PVC material. Cement shall be free-flowing without lumps or undissolved particles and shall show no gelation. Color shall not be orange.

C. AWWA C900/905 PVC Pipe

i. Pipes 4” through 12” shall conform to AWWA C900. Pipes larger than 12” shall conform to AWWA C905.

ii. Fittings shall be either of conform to AWWA C907, where indicated to be of PVC. Otherwise, fittings shall be of ductile iron conforming to AWWA C110, unless indicated to be of stainless steel or of some other type of material.

iii. Joints shall be push-on with gasket.

2.3 METAL PIPE

A. Carbon Steel Pipe

i. Carbon steel pipe shall be Schedule 10 conforming to ASTM A53, Type S, Grade B. Flanges shall conform to AWWA C207. Flange bolts and nuts shall be Type 316 stainless steel. Fittings shall be malleable iron conforming to ASTM A47 with dimensions conforming to ANSI B16.3.

B. Stainless Steel Pipe

i. Stainless steel pipe shall be Schedule 10 conforming to ASTM A312, Grade TP 316. Welding fittings shall conform to ASTM A403, Trade TP 316 and to ANSI B16.9. Flange and flange bolts shall conform to ASTM Aj182, Grade TP 316. Flanges shall be drilled to ANSI Standards. Welding rod shall be stainless steel of a type recommended by the fitting manufacturer.

C. Copper Lines

i. Buried Copper Lines: Copper tubing, Type K. ASTM B88 with solder type bronze or wrought copper fittings, ANSI B16.26 or ANSI B16.22.

ii. Aboveground Copper Lines: Copper tubing, Type L. ASTM B88 with brazed or solder joint copper brass, or bronze fittings, ANSI B16.18 or ANSI B16.22.

iii. Solder shall be lead free, 95% tin – 5% antimony.

D. Brass Pipe

i. Brass pipe shall be Schedule 40 red brass pipe conforming to ASTM B43 with H58 temper. Minimum yield strength shall be 18 ksi. Minimum tensile strength shall be 40 ksi.

ii. Fittings for brass pipe shall be wrought or cast brass or cast brass with threaded connections.

2.4 NIPPLES

A. Fittings for brass pipe shall be wrought or cast brass or cast brass with threaded connections.

2.5 UNIONS

A. Unions shall be of the same material as the piping in which installed, either threaded or with solder joint ends. Solder ends shall conform to Fed. Spec. WW-U-516 for use in copper tubing. For use in steel piping, unions shall conform to Fed. Spec. WW-U-531. Type, style and class shall be suitable for intended use.

PART 3 – EXECUTION

3.1 DUCTILE IRON PIPE

A. Underground pipe shall be installed in accordance with AWWA C600 except as modified herein. Excavate and backfill trenches in accordance with Section 02200, EARTHWORK. Place bedding as shown on the drawings and in such a manner as to provide firm, uniform support for the entire length of the pipe. Shape bell excavation for uniform support. Lay pipe to the elevations and slopes shown on the drawings. Inspect each pipe section to insure it is free from dirt and rubbish, has no cracks or broken sections, and that the cement mortar lining is intact. Remove all damaged pipe and fittings and replace with new material at no additional cost to the Owner. Lubricate gaskets and pull pipe home to the required embedment. Where mechanical joints are used, bolts shall be Cor-Ten, Mayari R or similar material coated with bituminous material. Install pipe with a polyethylene jacket conforming to ANSI/AWWA C105. Place thrust blocks where indicated.

B. Above Ground Pipe: Shall be installed as shown on the drawings.

3.2 PLASTIC PIPE

A. Solvent Welded PVC and CPVC Pipe: Prepare pipe and assemble joints in accordance with ASTM D2855 except as modified herein. Cut pipe square with its axis using a miter box or similar device. Chamfer the pipe edges on a 10-15 degree angle. Test the dry fit to insure that pipe and fitting can be tightly assembled. Clean the surfaces to be joined with a clean cotton cloth. Apply primer to the socket and to the pipe end and insure that surfaces are softened. Apply additional primer in sufficient quantity to insure softening is not lost. Apply cement to completely coat the pipe end while still wet with primer. Apply a light coat of cement to the socket. Force the pipe into the socket and give it a quarter turn. Wipe off excess cement and allow the joint to remain undisturbed for 45 minutes.

3.3 METAL PIPE

A. Carbon Steel and Stainless Steel Pipes

i. Conform to AWS Standards for welding, including any preheating required. Assemble welded joints insuring that pipe alignment remains true. Do not allow welding heat to damage seals, washers, gaskets and similar appurtenances.

ii. Assemble flanged pipe using Type 316 stainless steel bolts and nuts and neoprene gaskets. Align bolts and insure flanges are parallel and are assembled without straining or misaligning.

iii. Provide dielectric flange gaskets between carbon steel and stainless steel interfaces.

B. Brass Pipes

i. Threaded ends shall be wiped clean and shall be free from badly cut or damaged threads. Wrap male threads tightly with teflon tape and assemble joints by drawing pipe up tightly. Pipe shall not be forced or sprung into place.

C. Copper Lines

i. Copper tube and fittings shall be connected using lead-free 95% tin/5% antimony solder.

3.4 TESTING

A. Test assembled pipe and fittings in accordance with Section 15020, Testing and Disinfecting

3.5 DISINFECTING

A. Disinfect pipe used to convey potable water in accordance with Section 15020, Testing and Disinfecting. Control the waste chlorinated water as specified.

END SECTION

SECTION 15115 – ELECTRIC VALVE OPERATORS

PART 1 – GENERAL

1.1 SUMMARY

A. Requirements: Furnish and install electric valve operators for valves, complete and operable, including all controls, motors, gears, etc., as shown and as specified herein, in accordance with the requirements of the Contract Documents.

1.2 SUBMITTALS

A. Submit complete dimensioned shop drawings including wiring diagram for electric motor.

B. Submit complete operation and maintenance manual.

1.3 QUALITY ASSURANCE

A. The Contractor will be responsible for the coordination between the electric motor operator and valve supplied.

B. For the electric motor operator, it shall be the responsibility of the Contractor to provide a qualified representative of the valve actuator manufacturer to perform all field adjustments to set operator limit switches for the required functions. The cost of providing a qualified representative of the valve manufacturer for field adjustments shall be included in the Contractor's bid. All wiring of motor operators shall be identified with a unique number unlike any other wiring identification. It is the responsibility of the Contractor to coordinate the requirements of this section with those involving both electrical and instrumentation specifications.

C. All adjustments, calibration, and/or testing shall be done in the presence of the Owners representative.

PART 2 – PRODUCTS

2.1 ELECTRIC MOTOR OPERATOR

Size of Valves	4"
Type of Valve	3-way plug valve
Manuf. of Valve	Contractor to coordinate
Operating Pressure	11 psi
Type of fluid	R-1 Effluent

Temperature, ºF	65 – 80
Closing time	60 seconds
Power	480 volt/3 phase/60 hertz
Actuator Enclosure	Nema 4 (watertight) w/ 316 stainless steel fasteners
Inputs	2 – analog 4-20 mA 1 – discrete
Outputs	1 – analog, 4-20 mA (position indicator) 1 – discrete (motor failure)

2.2 ELECTRIC MOTOR REQUIREMENTS

A. General: The electric actuator shall conform to the requirements of AWWA Standard C540-93. Actuators shall contain motor, gearing, manual over-ride, limit switches, torque switches, drive coupling, integral motor controls, position feedback transmitter and mechanical dial position indicator.

B. Motor: The motor shall be specifically designed for actuator service. The motor will be of the induction type with class F insulation and protected by means of thermal switches imbedded in the motor windings. Motor enclosure will be totally enclosed, non-ventilated.

C. Handwheel: Manual over-ride shall be by handwheel. Manual operation will be via power gearing to minimize required rimpull and facilitate easy change-over from motor to manual operation when actuator is under load. Return from manual to electric mode of operation will be automatic upon motor operation. A seized or inoperable motor shall not prevent manual operation.

D. Limit Switches: Limit switches shall be furnished at each end of travel. Limit switch adjustment shall not be altered by manual operation. One set of normally open and one set of normally closed contacts will be furnished at each end of travel.

E. Torque Switches: Mechanically operated torque switches shall be furnished and will trip when the valve load exceeds the torque switch setting.

F. Control Module: Control module shall be of the electronic solid state type ac with proportional pulse output to control the speed of an ac valve operator motor.

G. Starter: The operator shall control a solid state reversing starter designed for minimum susceptibility to power line surges and spikes. The solid state starter and control module shall be rated for continuous modulating applications. Power supply shall be 480-volt, 3-phase, 60-Hz.

H. Construction: Control unit shall be microprocessor based and shall contain analog/digital converter, separate input-output switches, non-volatile random access memory for storage of calibration parameters and push button calibration elements for field setup. Potentiometer adjustments shall contain a PID control function internally. In addition the controller shall contain as standard feature a loss of command signal protection selectable to lock in last or lock in preset valve position and a valve position output signal in 4-20 mA.

PART 3 – EXECUTION

3.1 INSTALLATION

A. Valve operators are to be installed where specified and designated on the contract drawings. The Contractor is responsible for installation of the correct valve operator as specified to provide a complete piping system as specified.

B. Performance Testing: The contractor shall demonstrate that each valve operator installed as a part of a piping system will operate under field conditions as designed and in the manner for which the operator was specified. All testing will be witnessed and approved by the Inspector.

END SECTION

SECTION 15115 – PROCESS PIPING

PART 1 – GENERAL

1.1 SUMMARY

A. This section provides for aboveground and underground process piping, utility piping and appurtenances, in place, complete.

1.2 SUBMITTALS

A. Submit manufacturer's catalog cuts and brochures for pipe and fittings and for factory-applied coatings and linings.

B. Submit dimensioned shop drawings showing depths of cover, slopes, heights, supports, fittings, valves, jackets, thrust blocks and appurtenances.

C. Submit manufacturer's certificates of compliance for pipe fittings, coatings and linings.

D. Submit safety precautions, including MSDS sheets for all material.

E. Submit welder's qualifications for welded stainless steel pipe.

PART 2 – PRODUCTS

2.1 DUCTILE IRON PIPE

A. Ductile iron pipe shall conform to AWWA C115, C150 and C151. Fittings shall conform to AWWA C110. Joints shall conform to AWWA C111, except all aboveground ductile iron pipe, shall have ductile iron flange joints. Flange pipe shall be thickness Class 53. Mechanical joint and push-on joint buried pipe shall be thickness Class 52. All ductile iron pipe shall have a factory-applied 1 mil asphalt coating conforming to AWWA C151.

B. Nuts and bolts for flange joints shall be of Type 316 stainless steel.

2.2 BRASS PIPE

A. Brass pipe shall conform to ASTM B43 with threaded connections. Fittings shall be threaded cast bronze, ANSI B16.8.

2.3 COPPER TUBING

A. Copper tubing shall be Type L, Hard Drawn, conforming to ASTM B88. Fittings shall be cast bronze, ANSI B16.18 or wrought copper and bronze, ANSI B16.22. Joints shall be soldered. Solder shall be lead free, conforming to ASTM B32, Grade 95 TA.

2.4 POLYVINYL CHLORIDE (PVC) PIPE

A. Buried PVC gravity pipe 8" through 12" in diameter for conveyance of wastewater shall be SDR 35.

B. PVC pipe 6” and smaller in diameter, shall be Schedule 80, unless indicated to be Schedule 40. Pipe shall conform to ASTM D1785 with solvent weld fittings conforming to ASTM D2467. Solvent cement shall conform to ASTM D2564.

2.5 FIBERGLASS REINFORCE PLASTIC (FRP) PIPE

A. Buried FRP pipe and fittings shall be RED THREAD II, as manufactured by FGS Smith Fibercast, or approved equal, suitable for diesel fuel conveyance, and conforming to ASTM D2996, D4024 and D5685.

B. Pipe shall be manufactured by the filament winding process using an amine cured epoxy thermosetting resin to impregnate strands of continuous glass filaments, which are wound around a mandrel. Pipe shall be heat cured. Pipe shall have a minimum continuous steady pressure rating of 225 psig at 210° F, per ASTM D2992, Procedure A.

C. Fittings shall be manufactured using the same type of materials as the pipe. Fittings may be manufactured either by compression molding or spray-up/contact molding methods.

D. Adhesive shall be manufacturer’s standard of the piping system.

2.6 HANGERS AND SUPPORTS

A. Hangers and supports for process piping shall, in general, conform to ANSI B31.9.

i. Hangers for pipe sizes 1/2 inch to 1-1/2 inches shall be Type 316 stainless steel with adjustable swivels and split rings.

ii. Hangers for pipe sizes 2 inches and above shall be Type 316 stainless steel, adjustable, clevis type.

iii. Multiple or trapeze hangers shall be Type 316 stainless steel channels with welded spacers and hanger rods.

iv. Wall supports shall be as indicated.

v. Support for copper tubing larger than 1/2 inch shall be copper plated, carbon steel.

vi. Support for copper tubing 1/2 inch or smaller shall be brass sheeting, 18 gage, formed into a "U" shape.

vii. All hanger rods, nuts, bolts and fasteners shall be Type 316 stainless steel.

viii. Inserts shall be Type 316 stainless steel cast into concrete. Positive anchorage system shall be provided.

ix. Wall sleeves shall be as indicated.

PART 3 – EXECUTION

3.1 DUCTILE IRON PIPE

A. Install buried pipe in accordance with AWWA C600. Wrap all pipe and fittings with polyethylene encasement, conforming to AWWA C105. Provide thrust blocks, or total concrete encasement of fittings as indicated. Provide concrete jacket on all pipe and fittings, where indicated.

B. Install aboveground pipe using Type 316 stainless steel bolts and nuts for flange connections. Flange gaskets shall be neoprene. Align bolts in each joint. Insure flanges are paralleled and are assembled without straining or misaligning.

3.2 BRASS PIPE

A. Assemble brass pipe and fittings with threaded connections. Place teflon tape over male threads as a seal. Recut any damaged threads. Use care in connecting to transmitting units to avoid damage to non-structural assemblies. Maintain true alignment of all piping.

3.3 COPPER TUBING

A. Assemble copper tubing with lead-free solder. Clean pieces to be soldered to a bright finish. Apply flux and solder to pre-tin the segments. Assemble the segments and heat until solder flows freely into joints. Allow joints to cool undisturbed until warm to the touch. Remove spattered solder. Maintain a true, straight alignment of all components.

3.4 PVC PIPE

A. Install SDR 35 gravity pipe in accordance with the manufacturer's recommendation.

B. Install Schedule 40 and 80 pipe using solvent cement joints. Thoroughly clean each piece to be joined with material recommended by the pipe manufacturer. Cut pipe square and remove burrs. Apply primer as recommended by the cement manufacturer. Coat walls with cement and assemble the units. Procedures used shall conform to ASTM D2855. Do not disturb assembles until cement has fully set.

3.5 FRP PIPE

A. Install FRP pipe in accordance with the manufacturer's printed instructions by employees who have been trained by the manufacturer.
B. The piping system shall be subjected to 10 pressurization cycles from 0 psig to 1-1/2 times the design operating pressure. After the 10 cycles, the pressure shall be held on the system for a minimum of 1 hour and the line inspected for leaks. All joints that are found to leak by observation or during testing shall be repaired by the contractor and re-tested at no additional cost to the Owner.

3.6 GENERAL REQUIREMENTS FOR ALL PIPING

A. Interior and exposed piping shall run parallel or perpendicular to building lines. Provide non-corrosive supports and hangers. Coordinate pipe runs with electrical conduit and with ductlines. Make minor adjustments as necessary to avoid architectural or other features. Observe shelf life and pot life restrictions on cements.

B. Each pipeline shall be flushed with clean running water until all visible foreign matter has been removed. Flushing water shall be collected and handled in accordance with Federal, State and local regulations.

C. Testing of each pipeline, except gravity sewers and polyethylene tubing, shall be done at 150 psi for 30 minutes, unless allowed by the Owner to be tested at a lower pressure. No visible leaks shall be present. Equipment subject to damage from pressure shall be isolated during the test. Discharge of test water shall conform to the requirements of the State Department of Health.

D. Provide necessary transition fittings between different types of pipe as indicated.

3.7 HANGERS AND SUPPORTS

A. Install hangers and supports as described herein.

i. Install hangers so as to provide a minimum of 1/2 inch clearance from adjacent work.

ii. Place hangers within 12 inches of each horizontal elbow.

iii. Provide a minimum of 1-1/2 inches vertical adjustment on hangers.

iv. Support horizontal ductile iron pipe within 5 feet of each joint.

v. Space hangers in accordance with the following table:

Pipe Size (Inches)	Maximum Hanger Spacing (Feet)	Hanger Rod Diameter (Inches)
1/2 to 1-1/4	6.5	3/8
1-1/2 to 2	10	3/8
2-1/2 to 3	10	1/2
4 to 6	10	5/8
8 to 12	14	7/8
14 and Over	20	1
PVC, CPVC	6	3/8

END SECTION

SECTION 16000 – GENERAL REQUIREMENTS FOR ELECTRICAL WORK

PART 1 – GENERAL

1.1 SCOPE

A. This section covers all electrical work including labor and materials.

1.2 DESCRIPTION OF WORK

A. Scope: This section specifies general requirements for electrical work. Detailed requirements for specific electrical items are specified in other sections but are subject to the general requirements of this section. The electrical drawings and schedules included in this project manual are functional in nature and do not specify exact locations of equipment or equipment terminations.

Furnish all labor and materials required to complete all electrical work as indicated on the drawings and/or specified herein.

i. In general, the following work is included:

a. Installation of equipment assemblies including service equipment and interconnections.

b. Installation of electrical apparatus and interconnections.

c. Submittal of shop drawings.

d. Preparation of “Field Posted” as-built drawings.

e. Coordination with the Department of Water Supply on their work regarding the system controls and SCADA System.

f. Coordination with Maui Electric Company Ltd.

B. The term “wiring” shall include raceways, conductors, and supports.

C. Wiring and connecting all electrical equipment supplied for installation and use in this contract and not specifically listed as work by others.

1.3 QUALITY ASSURANCE

A. References: This section contains references to the following documents. They are a part of this section as specified and modified. In case of conflict between the requirements of this section and those of the listed documents, the requirements of this section shall prevail.

Reference	Title
NFPA-70-2008	National Electrical Code (NEC)

	Maui County Code
UL 943	Round-Fault Circuit Interrupters (2006)

B. Identification of Listed Products: Electrical equipment and materials shall be listed for the purpose for which they are to be used, by an independent testing laboratory. Two such organizations are Underwriters Laboratories (UL), and Electrical Testing Laboratories (ETL). Independent testing laboratory shall be acceptable to the inspection authority having jurisdiction.

When a product is not available with a testing laboratory listing for the purpose for which it is to serve, the product may be required by the inspection authority, to undergo a special inspection at the manufacturer's place of assembly. All costs and expenses incurred for such inspections shall be included in the original contract price.

C. Factory Test: Where specified in the individual product specification section, factory tests shall be performed at the place of fabrication and performed on completion of manufacture or assembly. The costs of factory tests shall be included in the contract price.

1.4 SUBMITTALS

A. Submit for approval one (1) electronic copy and three (3) hardcopies or alternatively six (6) hardcopies of shop drawings or catalog cuts of following equipment and resubmit until approval is received before placing order:

i. SCADA System

ii. Programmable logic controls

iii. Motor control centers

iv. Motor starters

v. Electrical apparatus

vi. Light fixtures

vii. Emergency generator set

viii. Transfer switch

1.5 DRAWINGS

A. Where the Contractor is required to provide information on drawings as part of the specified work, such drawings shall be prepared on 24-inch by 36-inch polyester plastic (Mylar) drafting media complete with borders and title blocks clearly identifying project name, equipment and the scope of the drawing. Drawing quality and size of presentation shall be such as to permit 50 percent reduction of such drawings for insertion in operation and maintenance manuals.

1.6 PROJECT/SITE CONDITIONS

A. General: Unless otherwise specified, equipment and materials shall be sized and derated for the ambient conditions, but not less than an ambient temperature of 40 degrees C at an elevation ranging from sea level to 3000 feet without exceeding the manufacturer's stated tolerances.

B. Corrosive Areas: The following areas are designated as corrosive: exteriors, chlorination room.

C. Seismic: Electrical equipment and supports shall be braced in accordance with UBC for Seismic Zone 2B.

1.7 STORAGE OF MATERIALS AND EQUIPMENT

A. Materials and equipment shall be stored to prevent damage and theft.

PART 2 – PRODUCTS

2.1 EQUIPMENT AND MATERIALS

A. General: Equipment and materials shall be new and free from defects; those listed by Underwriter's Laboratories shall be the "UL" label of approval. All material and equipment of the same or a similar type shall be of the same manufacturer throughout the work. Standard production materials shall be used wherever possible.

Substitute materials may be used only if submitted prior to bidding and if qualified and approved by addendum to the bid documents. List of substitute materials together with qualifying data shall be submitted for approval as provided in the GENERAL TERMS AND CONDITIONS.

Example

Item	Manufacturer and Catalog No. Specified	Substitute Manufacture and Catalog Number
Cable	Joe Doe – No. 3020	King – No. 2200

Qualifying data shall include cuts, shop drawings, and specifications to show equality with material specified herein and in drawings.

2.2 WIRING DEVICES

A. Convenience Receptacle: Duplex or Quadplex as indicated, 20 amperes, 125 volts, side wired, 3 wires, UL label, ivory colored, grounding type in plastic body. Hubbell, Arrow, Hart, Cooper, Leviton, or equal.

B. Ground-Fault Circuit Interrupter Receptacles:

i. UL 943, Dupex type as indicated, 20 amperes, 125 volts, for mounting in standard outlet box. Device shall be capable of detecting current leak of 6 mili-amperes or greater and tripping per requirements of UL 943 for Cass A GFCI device. Provide screw-type, side-wired wiring terminals or pre-wired leads. Hubbell, Arrow, Hart, Copper, Leviton, or equal.

2.3 DEVICES AND COVER PLATES

A. Plates for interior flush construction shall be satin finished 302 high nickel stainless steel. 18% chrome, 8% nickel with suitable hole for device.

2.4 WEATHERPROOF OUTLETS

A. Convenience outlets installed in outdoor damp or wet locations must consist of GFCI receptacles enclosed in weatherproof outlet boxes, with gasketed stainless steel plates and spring-loaded hinged lift covers. Sprints and hinge pins must be corrosion-resistant steel. Screws and spring covers must be chromium or cadmium – plated brass. Rubber or neoprene gaskets must provide a positive seal against the weather.

2.5 SPARE PARTS

A. Provide one (1) spare solid-state reduced-voltage starter, Cutler-Hammer type S811, compatible with motor control center.

B. Provide one (1) spare 20kVA control transformer compatible with motor control center.

PART 3 – EXECUTION

3.1 GENERAL

A. Construction: The work under Division 16 shall be performed in accordance with these general requirements.

Unless otherwise detailed or dimensioned, electrical layout drawings are diagrammatic. Locations are shown approximately only. The contractor shall coordinate the location of electrical material or equipment with the work. Minor changes in location of electrical material or equipment made prior to installation shall be made at no cost to the Department.

B. Housekeeping: Electrical equipment shall be protected from dust, water and damage. Before final acceptance, the Contractor shall touch up any scratches on equipment.

Electrical equipment temporarily exposed to weather, debris, liquids, or damage during construction shall be protected.

3.2 TESTING

A. General: Prior to energizing the electrical circuits, the following tests shall be performed. Unless otherwise specified, a 1,000 volt megohmmeter shall be used for resistance measurements.

B. Insulation Resistance Measurements:

i. General: Insulation resistance measurements shall be made on conductors and energized parts of electrical equipment. Minimum acceptable values of insulation resistance shall be in accordance with the applicable ICEA, NEMA or ANSI standards for the equipment or material being tested, unless otherwise specified. The ambient temperature at which insulation resistance is measured shall be recorded on the test form.

Insulation resistance measurements shall be recorded in a form acceptable to the Department. Insulation with resistance of less than 10 megohms is not acceptable.

ii. Conductor and Cable Tests: The phase-to-ground insulation resistance shall be measured for all circuits 120 volts and above except lighting circuits. Measurements may be made with motors and other equipment connected, except that solid state equipment shall be disconnected unless the equipment is normally tested by the manufacturer at voltages in excess of 1000 volts DC.

C. Ground-Fault Receptacle Test: Test ground-fault receptacles with a “load” (such as a plug-in light) to verify that the “line” and “load” leads are not reversed.

D. Three (3) copies of all test results shall be provided to the Department.

3.2 INSTALLATION

A. Provide all necessary foundation, supports and backing for enclosures, conduit, and equipment. Fixture support shall be capable of 300-pound loading, and shall be made to building structure.

B. Perform all cutting, drilling and patching necessary for installation of conduit and equipment. Repair any surface damage or marred during the installation. Cutting, repairs and finish shall be subject to the approval of the Department.

C. Minimum wire size for branch circuit shall be #12 AWG. Larger sizes may be used as necessary.

D. Crimp or pressure-connect all splices #10 AWG or smaller. Leave no sharp points that can pierce taping. Use no-solder pressure connectors for #8 AWG and larger. Use highest grade insulating and friction tape, applied in accordance with best practice of trade. Connections of light fixture wires to building wires may be made with approved wire-nuts.

E. Form wires neatly in all enclosures. Cable together and lace with waxed strings or tie wraps branch circuit conductors at panelboards.

F. Lubricants used for wire-pulling in all areas except as noted, shall be such that lubricant will not damage conductor insulation or sheathing. For neoprene jacketed and plastic-sheathed conductors, use powdered soapstone.

G. Where ducts pass through structural wall, provide openings with minimum of 1" mastic fill between duct envelope and structure to eliminate transfer of stresses from one to another. Through each duct, pull a test mandrel 10" long and ¼" less than nominal size of duct. Clean duct with compressed air or "mouse". Provide duct "separators and chairs", or supports for all multiple duct runs.

H. Where ducts pass through fire-rated wall or floor, seal opening around duct with UL listed foamed silicone elastomer compound.

I. Attach conduit to concrete and masonry with expansion anchors. Attach to wood by means of wood or lag screws.

J. Set all enclosures plumb and exactly flush with finish surface.

K. All cable splices shall be made in accordance with manufacturer's instructions. In underground locations, all splices shall be cast type using thermos-setting epoxy resin insulation.

L. Except as indicated in this section, the electrical subcontractor shall be responsible for the proper wiring of the electrical equipment pertaining to this project whether furnished by him or by others and shall install and connect whatever control equipment which may be furnished to him by the equipment Contractor or the Department. He shall also furnish whatever raceways, disconnect switches, motor starters, boxes fittings, wires and devices that he may need for proper and adequate installation of such electrical equipment.

M. Fixtures to be safely, positively and securely supported to structure by means of fixture studs in outlet boxes or other approved methods.

N. Grounding:

i. Provide grounding for entire electric installation as indicated and specified herein. Following are included as required grounding:

a. Electric service, its equipment and enclosures.

b. Conduits, other conductor enclosures and panelboards.

c. Neutral or identified conductor on interior wring system.

d. Non-current carrying metal parts or fixed equipment, such as, lighting fixtures, etc.

ii. Manner of Grounding: Sizes and types of ground conductors, ground clamps, bonding jumpers, conduit, fittings, also methods of securing same to obtain electric continuity and effective grounding, when not indicated: as per NEC Article 250.

O. Finishing:

i. Patch, repair and restore all structural and architectural elements cut or drilled for installation of electrical system. Drilling, cutting, patching, repairing and restoring shall be subject to approval.

ii. Attach electrical equipment to wood by wood screws, and attach to concrete by embedded or expansion inserts and bolts. Use powdered-driven charge with approval only. Close unused knock-outs on boxes or enclosures with metal cap. Powder actuated fasteners shall not be used on precast concrete. Do not use powder activated fasteners to attach enclosures and boxes to the building.

iii. All miscellaneous electrical construction, including supports, fasteners, and conduits (except 316 stainless steel items) shall be prepared and coated in accordance with the Department of Water Supply System Standards.

P. Prefunctional Checkout: Functional testing shall be performed. Prior to functional testing, all protective devices shall be adjusted and made operative. Prior to energization of equipment, the Contractor shall perform a functional checkout of the control circuit. Checkout shall consist of energizing each control circuit and operating each control, alarm or malfunction device and each interlock in turn to verify that the specified action occurs. The Contractor shall submit a description of his proposed functional test procedures prior to the performance of functional checkout.

3.4 OUTAGES

A. Outages will be scheduled to suit the schedule of the Department. Contractor shall request for outages in writing at least one week prior to desired outages and shall state desired length of outage. Request for outage shall be submitted to the Department. Contractor shall not conduct an outage until written approval is obtained. All desired outages shall be kept to a minimum and the outage time shall be kept as short in duration as possible. At the beginning of the project, Contractor shall submit a tentative schedule of outages to the Department. Tentative schedule shall indicate approximate date of outage, duration of outage and purpose of the outage.

3.5 DEMOLITION

A. Verify wiring and equipment indicated to be demolished serve only abandoned areas.

B. Demolition notes are based on casual field observation and existing record documents. Report discrepancies to the Department before disturbing existing installation.

C. Remove conduit, wire, boxes, or fastening devices as required to avoid any interference with new installation.

D. Repair adjacent construction and finishes damaged during demolition work.

E. The Department to identify equipment and items to be salvaged. Remove and protect items of salvageable value and turn over to the Department if desired. Items of salvageable value may be removed as work progresses. Transport salvaged items from site as they are removed to the Department baseyard site.

F. Remove demolished materials as work progresses. Legally dispose.

3.6 GUARANTEE

A. Installation shall be complete in every detail and ready for use. Any items supplied by Contractor developing defects within one (1) year of final acceptance by the Department, shall be replaced by such materials, apparatus or parts including installation labor to make such defective portion of complete system conform to true intent and meaning of Drawings and Specifications, at no additional charge to the Department.

3.7 RECORD DOCUMENTS

A. Record documents refer to those documents maintained and annotated by the Contractor during construction, and include record drawings in accordance with changes or new information for schedules, lists, and drawings.

B. Record documents shall include the raceway wiring numbering system used by the Contractor.

END SECTION

SECTION 16110 – RACEWAYS, FITTINGS, AND SUPPORTS

PART 1 – GENERAL

1.1 SUMMARY

A. This section specifies raceways for electrical conductors including fittings and supports. Raceways shall be provided for power to signaling devices.

1.2 REFERENCES

A. This section contains references to the following documents. They are a part of this section as specified and modified. In case of conflict between the requirements of this section and the listed documents, the requirements of this section shall prevail.

Reference	Title
ANSI C80.1-2005	American National Standard for Electrical Rigid Steel Conduit (ERSC)
ANSI C80-83	Electrical Metallic Tubing
FEDSPEC WW-C-581E-77	Conduit, Metal, Rigid and Intermediate; and Coupling, Elbow, and Nipple, Electrical Conduit; Zinc Coated
NEMA TC2-83	Electrical Plastic Tubing (EPT) and Conduit (EPC 40 and EPC 80)
NFPA 70-2008	National Electrical Code (NEC)
UL 6	Electrical Rigid Metal Conduit – Steel (2007)

PART 2 – PRODUCTS

2.1 RACEWAY

A. Steel Conduit:

i. Rigid Steel Conduit: Rigid steel conduit shall comply with ANSI C80.1 and UL 6 with smooth finished surfaces. Conduit shall be stainless steel. Unless otherwise specified, minimum size shall be ¾ inch.

ii. Fittings: Locknuts shall be extra heavy electrogalvanized steel for sizes through 2 inches. Locknuts larger than 2 inches shall be electrogalvanized malleable iron. Bushings shall be electrogalvanized malleable iron with insulating collar. Grounding bushings shall be locking type and shall be provided with a feed-through compression lug for securing the ground cables.

Unions shall be electrogalvanized ferrous alloy type Appleton UNF or UNY, Crouse-Hinds UNF or UNY, or equal. Threadless fittings are not acceptable. Conduit bodies shall be ferrous alloy type with screw taps for fastening covers. Gaskets shall be made of neoprene.

Expansion fittings in embedded runs shall be watertight and shall be provided with an internal bonding jumper. The expansion material shall be neoprene and shall allow for ¾-inch movement in any direction.

B. Electrical Metallic Tubing (EMT): Electrical metallic tubing shall be electrogalvanized and shall be ANSI C80.3. EMT fittings shall be compression type. Minimum size shall be ¾-inch.

C. Flexible Conduits: Flexible steel, zinc-coated, ½" minimum diameter, and used with factory approved fittings. In wet locations, use liquid-tight type jacketed with polyethylene.

D. Rigid Nonmetallic Conduit: Rigid nonmetallic conduit shall be NEMA TC2, type EPC-40-PVC, or EPC-80-PVC high impact, polyvinylchloride (PVC). Fittings used with PVC conduit shall be PVC solvent weld type. Nonmetallic conduits shall be UL listed for their respective applications. Minimum size shall be ¾-inch.

2.2 BOXES AND FITTINGS

A. Cast Boxes: Boxes shall be stainless steel unless otherwise specified. Integrally cast threaded hubs or bosses shall be provided for conduit entrances and shall provide for full 5-thread contact on tightening. Drilling and threading shall be done before galvanizing. A full body neoprene gasket shall be provided with the cover. Type 304 stainless steel screws shall be provided for covers.

B. Boxes and Fittings in Outdoor or Corrosive Areas: Boxes and fittings located outdoors or in corrosive areas shall be NEMA 4X, Type 316 stainless steel.

C. Hubs: Threaded hubs for connection of conduit to junction, device or terminal boxes shall be made of stainless steel and shall have insulated liner and insulating bushings. The hubs shall utilize a neoprene O-ring and shall provide a watertight connection. All threaded fitting threads to be coated with anti-seize compound.

2.3 RACEWAY SUPPORTS

A. Conduit Supports: Individual conduit supports shall be one-hole stainless steel pipe straps used with galvanized clamp backs and nesting backs where required.

B. Structural Attachments (Racks): Structural attachments shall be constructed from hot-dip galvanized framing channel for interior spaces and 316 stainless steel for exterior spaces as specified.

PART 3 – EXECUTION

3.1 CONDUIT

A. General:

i. Conduit Locations: Unless otherwise specified, in Table A, unscheduled conduit shall be rigid stainless steel.

Table A

Location	Conduit type
Embedded, underground	Schedule 40 PVC
Exposed in interior areas	Electrical Metallic Tubing
Exposed in exterior areas	Rigid steel – stainless steel
	Liquid-tight flexible conduits as indicated

ii. Conduit Runs Between Boxes: The Contractor shall limit the number of directional changes of the conduit to total not more than 270 degrees in any run between pull boxes. Conduit runs shall be limited to 400 feet, less 100 feet or fraction thereof, for every 90 degrees of change in direction.

Bends and offsets shall be avoided where possible but, where necessary, shall be made without flattening or kinking, or shall be factory preformed bends. Turns shall be made with cast metal fittings or conduit bends. Welding, brazing or otherwise heating of conduit is not acceptable.

iii. Junction and Pull Boxes: Where required for pulling cable and as necessary, the Contractor shall provide pull boxes.

iv. Conduit Terminations: Conduit entering NEMA 1 type sheet steel boxes or cabinets shall be secured by locknuts on both the interior and exterior of the box or cabinet and shall have an insulating grounding or bonding bushing constructed over the conduit end. Conduit entering all other boxes shall be terminated with a threaded hub. Cast boxes and nonmetallic enclosures shall have threaded hubs. Joints shall be made with standard couplings or threaded unions. Metal parts of nonmetallic boxes and plastic coated boxes shall be bonded to the conduit system.

Running threads shall not be used in lieu of conduit nipples, nor shall excessive thread be used on any conduit. The ends of conduit shall be cut square, reamed, and threaded with straight threads. Rigid steel conduit shall be made up tight and without thread compound. Exposed male threads on rigid steel conduit shall be coated with zinc-rich paint.

PVC conduit entering fiberglass boxes or cabinets shall be secured by threaded bushings on the interior of the box and shall be terminated with a threaded male

terminal adapter having a neoprene O-ring. Joints shall be made with standard PVC couplings.

Conduit entering field equipment enclosures shall enter the bottom or side of the box. Where conduit comes from above, it shall be run down beside the enclosure and a tee condulet and drip leg installed.

B. Conduit Support: Exposed rigid steel conduits (stainless steel) shall be run on supports spaced not more than 10 feet apart and shall be constructed with runs parallel or perpendicular to walls, structural members, or intersections of vertical planes.

Steel conduits shall be supported away from the structures using hot-dip galvanized malleable iron straps with nesting backs unless otherwise indicated. Use stainless steel for exterior locations unless otherwise indicated. Where three or more conduits are located in a parallel run, they shall be spaced out from the wall using framing channel.

C. Expansion fittings shall be provided whenever embedded conduit crosses building expansion joints, between two adjacent structures, and between a duct bank and structure.

Duct banks shall be placed on an undisturbed soil base. A Type B backfill as specified on plans shall be used as a base when an undisturbed soil base is not available. Backfill over the duct bank shall comply to drawings on plans. The fill shall be brought up to finish grade. Re-grass to match existing, or better. The ends of conduits shall be protected from damage during construction by using plastic plugs. A ¼-inch hole shall be drilled in the lower portion of the plug to provide drainage.

D. Conduit Penetrations: Unless otherwise specified, conduit routed perpendicular through floors, walls or other concrete structures shall pass through cast-in-place openings wherever possible. In cases where cast-in-place openings are not possible, appropriate size holes shall be bored through the concrete to accommodate the conduit passage. The size and location of the holes shall not impair the structure's integrity. After completion, grout or calk around conduit and finish to match existing surroundings.

Wherever conduits penetrate outdoor concrete wall or ceilings below grade, the Contractor shall provide a watertight seal as manufactured by O.Z. Gedney Co., Type CSMC; Thunderline Corp., Link Seal; or equal.

E. Damaged areas shall be patched, using manufacturer's recommended material. The area to be patched shall be built up to the full thickness of the coating. Painted fittings are not acceptable.

END SECTION

SECTION 16120 – CONDUCTORS, WIRE, AND CABLE

PART 1 – GENERAL

1.1 SUMMARY

A. This section specifies conductors and cables rated 600 to 15,000 volts used for power and control circuits.

1.2 REFERENCES

A. This section contains references to the following documents. They are a part of this section. In case of conflict between the requirements of this section and those of the listed documents, the requirements of this section shall prevail.

Reference	Title
ASTM B3-74	Soft or Annealed Copper Wire
ASTM B33-81	Tinned Soft or Annealed Copper Wire for Electrical Purposes
NEMA WC7-82	Cross-Linked-Thermosetting Insulated Wire and Cable for the Transmission and Distribution of Electric Energy
NFPA 70-2008	National Electric Code (NEC)
UL 44-83	Rubber-Insulated Wires and Cables
UL 83-83	Thermoplastic-Insulated Wires and Cables

PART 2 – PRODUCTS

2.1 GENERAL

A. With the exception of lighting, and receptacle circuits, the type, size and number of conductor shall be as specified on the drawings or schedules. Lighting and receptacle circuit conductors are unscheduled and shall be sized by the Contractor in accordance with the NEC to limit voltage drop to 3 percent.

2.2 COLOR CODING

A. Power Conductors: Single-conductor power conductors shall have the following colors for the indicated voltage:

	120/240V	480/277V
Phase A	Black	Brown
Phase B	Red	Orange
Phase C		Yellow
Ground	Green	Green

Neutral	White	White

2.3 POWER, LIGHTING AND RECEPTACLE BRANCH CIRCUIT CONDUCTORS

Minimum conductor size shall be 12 AWG.

Conductors shall be provided with the following characteristics:

A. Voltage: 600 volts.

B. Conductor: Copper, 600 volt, No. 12 AWG minimum, stranded.

C. Insulation: THHN, 90 degree damp, polyvinylchloride (PVC) per UL 83.

D. Jacket: Nylon.

E. Flame Resistance: UL 83.

F. Manufacturer: Alpha, Carol, Northern Wire and Cable, General Cable; or equal.

2.4 SPLICING AND TEMINATING MATERIALS

A. 600 Volt Conductor and Cable Connectors: Connectors shall be tool applied compression type or correct size and UL listed for the specific application. Connectors shall be tin-plated high conductivity copper.

B. In-line splices and taps shall be used only where specified, or by written consent of the Department. When used, they shall be of the same construction as other connectors. Splices shall be compression type, made with a compression tool die approved for the purpose, as made by Thomas and Betts Corp., or equal. Splice shall be covered with a heat-shrinkable sleeve or boot.

PART 3 – EXECUTION

3.1 GENERAL

A. Each power and control conductor shall be identified at each terminal to which it is connected and identified with heat shrink type number sleeves on both ends.

B. Pulling wire and cable into conduit or trays shall be completed without damaging or putting undue stress on the cable insulation. Soapstone, talc or UL listed pulling compounds are acceptable lubricants for pulling wire and cable. Grease is not acceptable. Raceway construction shall be complete, cleaned, and protected from the weather before cable is placed.

C. Whenever a cable leaves a raceway, a cable support shall be provided.

D. When flat bus bar connections are made with unplated bar, the Contractor shall scratch-brush the contact areas. Bolts shall be torqued to the bus manufacturer's recommendations.

3.2 TESTING

A. General: The Contractor shall test conductors and cable in accordance with paragraph 16000-3.2 B.

B. Three (3) copies of all test results shall be provided to the Department.

END SECTION

SECTION 16235 – EMERGENCY/STANDBY POWER SYSTEMS GENERATOR SET

PART 1 – GENERAL

1.1 SUMMARY

A. As specified in Section 01100.

1.2 DESCRIPTION OF WORK

A. Provide complete factory assembled generator set equipment with digital (microprocessor-based) electronic generator set controls, digital governor, and digital voltage regulator.

B. Provide factory test, startup by a supplier authorized by the equipment manufacturer(s), and on-site testing of the system.

C. The generator set manufacturer shall warrant all equipment provided under this section, so that there is one source for warranty and product service. Technicians specifically trained and certified by the manufacturer to support the product and employed by the generator set supplier shall service the generator sets.

1.3 RELATED WORK

A. Section 15921 – GENERATOR ACCESSORIES.

1.4 CODE AND STANDARDS

A. The generator set installation and on-site testing shall conform to the requirements of the following codes and standards, as applicable. The generator set shall include necessary features to meet the requirements of these standards.

i. IEEE 446 – Recommended Practice for Emergency and Standby Power Systems for Commercial and Industrial Applications.

ii. NFPA 37

iii. NFPA 70 – National Electrical Code. Equipment shall be suitable for use in systems in compliance to Article 700, 701, and 702.

iv. NFPA 110 – Emergency and Standby Power Systems. The generator set shall meet all requirements for Level 1 systems. Level 1 prototype tests required by this standard shall have been performed on a complete and functional unit, component level type tests will not substitute for this requirement.

B. The generator set and supplied accessories shall meet the requirements of the following standards:

i. NEMA MG-11998 Part 32. Alternator shall comply with re requirements of this standard.

ii. UI142 – Sub-Base Tanks.

iii. UL1236 – Battery Chargers.

iv. UL2200. The generator set shall be listed to UL2200 or submit to an independent third party certification process to verify compliance as installed.

C. The control system for the generator set shall comply with the following requirements.

i. EN50082-2, Electromagnetic Compatibility – Generic Immunity Requirements, Part 2: Industrial.

ii. FCC Part 15, Subpart B.

iii. IEC8528 Part 4. Control Systems for Generator Sets.

iv. IEC Std 801.2, 801.3, and 801.5 for susceptibility, conducted, and readiated electromagnetic emissions.

v. UL508. The entire control system of the generator set shall be UL508 listed and labeled.

vi. UL1236 – Battery Chargers.

D. The generator set manufacturer shall be certified to ISO 9001 International Quality Standard and shall have third party certification verifying quality assurance in design/development, production, installation, and service, in accordance with ISO 9001.

1.5 ACCEPTABLE MANUFACTURERS

A. Only approved bidders shall supply equipment provided under this contract. Equipment specifications for this project are based on generator sets manufactured by Caterpillar Power Systems with microprocessor-based controls. Equipment by other suppliers that meets the requirement of this specification are acceptable, if approved not less than 2 weeks before scheduled bid date.

1.6 SUBMITTALS

A. Contractor shall submit the following:

i. Manufacturer's specifications and data sheets.

ii. Manufacturer's published warranty documents.

iii. Shop drawings showing plan and elevation view with overall and interconnection point dimensions.

iv. Interconnection wiring diagrams showing all required external connections with field wiring terminals marked in a consistent point manner.

PART 2 – PRODUCTS

2.1 GENERATOR SET

A. Ratings:

i. The generator set shall operate at a voltage of 480Y/277 Volts AC, Single phase, 3-wire, 60 hertz, extended tack alternator for full single phase output up to full set rated 3-phase kW.

ii. The generator set shall be rated as shown on drawings standby at 0.8 PF, rating, based on site conditions of: Altitude to 500 ft., ambient temperatures up to 95 degrees F.

B. Performance:

i. Electronic Voltage regulator shall regulate voltage to plus or minus 0.5 percent for any constant load between no load and rated load. Random voltage variation with any steady load from no load to full load shall not exceed plus or minus 0.25%.

ii. Frequency regulation shall be isochronous from steady state no load to steady state rated load. Random frequency variation with any steady load. Random frequency variation with any steady load from no load to full load shall not exceed plus or minus 0.2 Hz.

iii. The diesel engine-generator set shall accept a single step load of 100% nameplate kW and power factor, less applicable derating factors, with the engine-generator set at operating temperature.

iv. Motor starting capability shall be a minimum of 812 skVA @ 25% Voltage Dip. The generator set shall be capable of recovering to a minimum of 90% of rated no load voltage following the application of the specified kVA load at near zero power factor applied to the generator set. Maximum voltage dip on application of this load, considering both alternator performance and engine speed changes shall not exceed 25%.

v. The alternator shall product a clean AC voltage waveform, with not more than 5% total harmonic distortion at full linear load, when measured from line to neutral, and with not more than 3% in any single harmonic, and no 3rd order harmonics or their multiples. Telephone influence factor shall be less than 40. The alternator shall be extended stack for full single phase output.

vi. The generator set shall be certified by the engine manufacturer to be suitable for use at the installed location and rating, and shall meet all applicable exhaust emission requirements at the time of commissioning.

C. Construction

i. The engine-generator set shall be mounted on a heavy-duty steel base to maintain alignment between components. The based shall incorporate a battery tray withhold-down clamps within the rails.

ii. All switches, lamps, and meters in the control system shall be oil-tight and dust-tight. All active control components shall be installed within a UL/NEMA 3R enclosure. There shall be no exposed points in the control (with the door open) that operate in excess of 50 volts.

D. Connections

i. The generator set load connections shall be composed of silver or tin plated copper bus bars, drilled to accept mechanical or compression terminations of the number and type as shown on the drawings.

Sufficient lug space shall be provided for use with cables of the number and size as shown on the drawings.

ii. Power connections to auxiliary devices shall be made at the devices, with required protection located at a wall-mounted common distribution panel.

iii. Generator set control interfaces to other system components shall be made on a permanently labeled terminal block assembly. Labels describing connection point functions shall be provided.

2.2 ENGINE AND ENGINE EQUIPMENT

The engine shall be diesel, 4 cycle, radiator and fan cooled. Minimum displacement shall be 537 cubic inches, with 6 cylinders. The horsepower rating of the engine at its minimum tolerance level shall be sufficient to drive the alternator and all connected accessories. Two cycle engines are not acceptable. Engine accessories and features shall include:

A. An electronic governor system shall provide automatic isochronous frequency regulation. The control system shall actively control the fuel rate and excitation as appropriate to the state of the generator set. Fuel rate shall be regulated as a function of starting, accelerating to start disconnect speed, accelerating to rated speed. The governing system shall include a programmable warm up at idle and cool down at idel function. While operating in idle state, the control system shall disable the alternator excitation system.

B. Skid-mounted radiator and cooling system rated for full load operation in 120 degrees F ambient as measured at the alternator air inlet and for altitude at project site. Radiator shall be sized based on a core temperature that is 20F higher than the rated operation in a controlled environment. Radiator shall be provided with a duct adapter flange. The equipment manufacturer shall fill the cooling system with a 50/50-ethylene glycol/water mixture prior to shipping. Rotating parts shall be guarded against accidental contact.

C. Electric starter(s) capable of three complete cranking cycles without overheating.

D. Positive displacement, mechanical, full pressure, lubrication oil pump.

E. Full flow lubrication oil filters with replaceable spin-on canister elements and dipstick oil level indicator.

F. An engine drive, mechanical, positive displacement fuel pump. Fuel filter with replaceable spin-on canister element. Fuel cooler, suitable for operation of the generator set as full rated load in the ambient temperature specified shall be provided if required for operation due to the design of the engine and the installation.

G. Replaceable dry element air cleaner with restriction indicator.

H. Flexible supply and return fuel lines.

I. Engine mounted battery charging alternator, 40-ampere minimum, and solid-state voltage regulator.

J. Coolant Heater

i. Engine mounted, thermostatically controlled, coolant heater(s) for each engine. Heater voltage shall be as shown on the project drawings. The coolant heater shall be UL1030 listed and labeled.

ii. The coolant heater shall be installed on the engine with silicone hose connections. Steel tubing shall be used for connections. Steel tubing shall be used for connections into the engine coolant system wherever the length of pipe run exceeds 12 inches. The coolant heater installation shall be specifically designed to provide proper venting of the system. The coolant heaters shall provisions to isolate the heater for replacement of the heater element without draining the coolant from the generator set. The quick disconnect/automatic sealing couplers shall allow the heater element to be replaced without draining the engine cooling system or significant coolant loss.

iii. The coolant heater shall be provided with a DC thermostat, installed at the engine thermostat housing. An AC power connection box shall be provided for a single AC power connection to the coolant heater system.

iv. The coolant heater(s) shall be sized as recommended by the engine manufacturer to warm the engine to a minimum of 100F (40C) in a 40F ambient, in compliance with NFPA10 requirements, or the temperature required for starting and load pickup requirements of this specifications.

K. (Deleted requirement).

L. Starting and Control Batteries shall be lead acid type, 24 volt DC, sized as recommended by the engine manufacturer, complete with battery cables and connectors. The batteries shall be capable of a minimum of three complete 15-second cranking cycles at 40F ambient temperature when fully charged.

M. (Deleted requirement).

N. A UL listed certified 10 amp voltage regulated battery charger shall be provided for each engine-generator set. The charger shall be located in an automatic transfer switch, but may be wall mounted, at the discretion of the installer. Input AC voltage and DC output voltage shall be as required. Chargers shall be equipped with float, taper and equalize charge settings. Operational monitors shall provide visual output along with individual form C contacts rated at 4 amps, 120 VAC, 30VDC for remote indication of:

Loss of AC power – red light
Low battery voltage – red light
High battery voltage – red light
Power ON – green light (no relay contact)

2.3 AC GENERATOR

A. The AC generator shall be; synchronous, four pole, 2/3 pitch, revolving field, drip-proof construction, single pre-lubricated sealed bearing, air cooled by a direct drive centrifugal blower fan, and directly connected to the engine with flexible drive disc. All insulation system components shall meet NEMA MG1 temperature limits for Class H insulation system and shall be UL1446 listed. Actual temperature rise measured by resistance method at full load shall not exceed 130 degrees Centigrade.

B. The generator shall be capable of delivering rated output (kVA) at rated frequency and power factor, at any voltage not more than 5 percent above or below rated voltage.

C. A permanent magnet generator (PMG) shall be included to provide a reliable source of excitation power optimum motor starting and short circuit performance. The PMG and controls shall be capable of sustaining and regulating current supplied to a single phase or three phase fault at approximately 300% of rated current for not more than 10 seconds.

D. The subtransient reactance of the alternator shall not exceed 15 percent, based on the standby rating of the generator set.

2.4 GENERATOR SET CONTROL

The generator set shall be provided with a microprocessor-based control system that is designed to provide automatic starting, monitoring, and control functions for the generator set. The control system shall also be designed to allow local monitoring and

control of the generator set, and remote monitoring and control as described in this specification.

The control shall be mounted on the generator set, or may be mounted in a free-standing panel next to the generator set if adequate space and accessibility is available. The control shall be vibration isolated and prototype tested to verify the durability of all components in the system under the vibration conditions encountered.

The generator set mounted control shall include the following features and functions.

A. Control Switches:

   i. Emergency Stop Switch: Switch shall be Red “mushroom-head” push-button. Depressing the emergency stop switch shall cause the generator set to immediately shut down, and be locked out from automatic restarting.

   ii. Panel Lamp Switch: Depressing the panel lamp switch shall cause the entire panel to be lighted with DC control power. The panel lamps shall automatically be switched off 10 minutes after the switch is depressed, or after the switch is depressed a second time.

B. Generator Set AC Output Metering: The generator set shall be provided with a metering set including the following features and functions:

   i. Digital metering set, 1% accuracy, to indicate generator RMS voltage and current, frequency, output current, output KW, KW-hours, and power factor. Generator output voltage shall be available in line-to-line and line-to-neutral voltages, and shall display all three-phase voltages (line to neutral or line to line) simultaneously.

   ii. Digital voltmeter, ammeter, frequency meter, power factor meter, and kilowatt (KW) meter. Voltmeter and ammeter shall display all three phases. Meter scales shall be color coded in the following fashion: green shall indicate normal operating condition, amber shall indicate operation in ranges that indicate potential failure, and red shall indicate failure impending. Metering accuracy shall be within 1% at rated output. Both analog and digital metering are required.

   iii. The control system shall monitor the total load on the generator set, and maintain data logs of total operating hours at specific load levels ranging from 0 to 119% of rated load, in 10% increments. The control shall display hours of operation at less than 30% load and total hours of operation at more than 90% of rated load.

   iv. The control system shall log total number of operating hours, total kWH, and total control on hours, as well as total values since reset.

C. Generator Set Alarm and Status Display:

   i. The generator set control shall include LED alarm and status indication lamps. The lamps shall be highly-intensity LED type. The lamp condition shall be clearly apparent under bright room lighting conditions. Functions indicated by the lamps shall include:

a. The control shall include five configurable alarm-indicating lamps. The lamps shall be field adjustable for any status, warning, or shutdown function monitored by the genset. They shall also be configurable for color, and control action (status, warning, or shutdown).

b. The control shall include green lamps to indicate that the generator set is running at rated frequency and voltage, and that a remote start signal has been received at the generator set. The running signal shall be based on actual sensed voltage and frequency on the output terminals of the generator set.

c. The control shall include a flashing red lamp to indicate that the control is not in automatic state, and red common shutdown lamp.

d. the control shall include an amber common warning indication lamp.

ii. The generator set control shall indicate the existence of the warning and shutdown conditions on the control panel. All conditions indicated below for warning shall be field-configurable for shutdown. Conditions required to be annunciated shall include:

Low oil pressure (warning)

Low oil pressure (shutdown)

Low coolant temperature (warning)

High coolant temperature (warning)

High coolant temperature (shutdown)

High oil temperature (warning)

Low coolant level (warning)

Fail to start/overcrank (shutdown)

Overspeed (shutdown)

Low DC voltage (warning)

High DC voltage (warning)

Low fuel-day tank (warning)

High AC voltage (shutdown)

Low AC voltage (shutdown)

Under frequency (shutdown)

Over current (shutdown)

Over load (warning)

Emergency stop (shutdown)

(4) configurable conditions

iii. Provisions shall be made for indication of four customer-specified alarm or shutdown conditions. Labeling of the customer-specified alarm or shutdown conditions shall be of the same type and quality as the above-specified conditions. The non-automatic indicating lamp shall be red, and shall flash to indicate that the generator set is not able to automatically respond to a command to start from a remote location.

D. Engine Status Monitoring:

i. The following information shall be available from a digital status panel on the generator set control:

engine oil pressure (psi or kPA)

engine coolant temperature (degrees F or C)

engine oil temperature (degrees F or C)

engine speed (rmp)

number of hours of operation (hours)

battery voltage (DC volts)

ii. The control system shall also incorporate a data logging and display provision to allow logging of the last 10 warning or shutdown indications on the generator set, as well as total time of operation at various loads, as a percent of the standby rating of the generator set.

E. Engine Control Functions:

i. The control system provided shall include a cycle cranking system, which allows for user selected crank time, rest time, and # of cycles. Initial settings shall be for 3 cranking periods of 15 seconds each, with 15-second rest period between cranking periods.

ii. The control system shall include an engine governor control, which functions to provide steady state frequency regulation as noted elsewhere in this specification. The governor control shall include adjustments for gain, damping, and a ramping function to control engine speed and limit exhaust smoke while the unit is starting.

iii. The control system shall include time delay start (adjustable 0-300 seconds) and time delay stop (adjustable 0-600 seconds) functions.

iv. The control system shall include sender failure monitoring logic for speed sensing, oil pressure, and engine temperature which is capable of discriminating between failed sender or wiring components, and an actual failure conditions.

F. Alternator Control Functions:

i. The generator set shall include an automatic digital voltage regulation system that is matched and prototype tested by the engine manufacturer with the governing system provide. It shall be immune from misoperation due to load-induced voltage waveform distortion and provide a pulse width modulated output to the alternator exciter. The voltage regulation system shall be equipped with three-phase RMS sensing and shall control buildup of AC generator voltage to provide a linear rise and limit overshoot. The system shall include torque-matching characteristic, which shall reduce output voltage in proportion to frequency below an adjustable frequency threshold. Torque matching characteristic shall be adjustable for roll-off frequency and rate, and be capable of being curve-match to the engine torque curve with adjustments in the field. The voltage regulator shall include adjustments for gain, damping, and frequency roll-off. Adjustments shall be broad range, and made via digital raise-lower switches, with an alphanumeric LED readout to indicate setting level.

ii. Controls shall be provided to monitor the output current of the generator set and initiate an alarm (over current warning) when load current exceeds 110% of the rated current of the generator set on any phase for more than 60 seconds. The controls shall shut down and lock out the generator set when output current level approaches the thermal damage point of the alternator (over current shutdown). The protective functions provided shall be in compliance to the requirements of NFPA70 article 445.

iii. Controls shall be provided to individually monitor of the output current for short circuit conditions. The control/protection system shall monitor the current level and voltage. The controls shall shut down and lock out the generator set when output current level approaches the thermal damage point of the alternator (short circuit shutdown). The protective functions provided shall be incompliance to the requirements of NFPA70 article 445.

iv. Controls shall be provided to monitor the KW load on the generator set, and initiate an alarm condition (over load) when total load on the generator set exceeds the generator set rating for in excess of 5 seconds. Controls shall include a load shed control, to operate a set of dry contacts (for use in shedding customer load devices) when the generator set is overloaded.

v. An AC over/under voltage monitoring system that responds only to true RMS voltage conditions shall be provided. The system shall initiate shutdown of the generator set when alternator output voltage exceeds 110% of the operator-set voltage level for more than 10 seconds, or with no intentional delay when voltage exceeds 130%. Under voltage shutdown shall occur when the output voltage of the alternator is less than 85% for more than 10 seconds.

vi. A battery monitoring system shall be provided which initiates alarms when the DC control and starting voltage is less than 27VDC or more than 59 VDC. During engine cranking (starter engaged), the low voltage limit shall be disabled, and if DC voltage drops to less than 14.4 volts for more than two seconds a "weak battery" alarm shall be initiated.

vii. When required by National Electrical Code or indicated on project drawings, the control system shall include a ground fault monitoring relay. The relay shall be adjustable from 3.8-1200 amps, and include adjustable time delay of 0-10.0 seconds. The relay shall be for indication only, and not rip or shut down the generator set. Note bonding and grounding requirements for the generator set, and provide relay that will function correctly in system as installed.

G. The generator set shall be provided with a network communication module to allow generic universal communication, such as BACNET, with the generator set control by remote devices. The control shall communicate all engine and alternator data, and allow starting and stopping of the generator set via the network in both test and emergency modes.

H. Provide and install a 16-light LED type remote alarm annunciator with horn, located as shown on the drawings or in a location that can be conveniently monitored by facility personnel. The remote annunciator shall provide all the audible and visual alarms called for the NFPA Standard 110 for level 1 systems; and in addition shall provide indications for high battery voltage, low battery voltage, loss of normal power to the charger. Spare lamps shall be provided to allow future addition of other alarm and status functions to the charger. Spare lamps shall be provided to allow future addition of other alarm and status functions to the annunciator. Provisions for labeling of the annunciator in a fashion consistent with the specified functions shall be provided. Alarm silence and lamp test switch(es) shall be provided. LED lamps shall be replaceable, and indicating lamp color shall be capable of changes needed for specific application requirements. Alarm horn shall be switchable for all annunciation points. Alarm horn (when switched on) shall sound for first fault, and all subsequent faults, regardless of whether first fault has been cleared, in compliance with NFPA 110 3-5.6.2.

I. The generator set shall be provided with a mounted main line circuit breaker, sized to carry the rated output current of the generator set. The circuit breaker shall incorporate an electronic trip unit that operates to protect the alternator under all overcurrent conditions, or a thermal-magnetic trip with other overcurrent protection devices that positively protect the alternator under overcurrent conditions. The supplier shall submit time overcurrent characteristic curves and thermal damage curve for the alternator, demonstrating the effectiveness of the protection provided.

J. Control Interfaces for Remote Monitoring:

i. All control and interconnection points from the generator set to remote components shall be brought to a separate connection box. No field connections shall be made in the control enclosure or in the AC power output enclosure. Provide the following features in the control system:

ii. Form “C” dry common alarm contact set rated 2A @ 30VDC to indicate existence of any alarm or shutdown condition on the generator set.

iii. One set of contacts rated 2A @ 30VDC to indicate generator set is ready to load. The contacts shall operate when voltage and frequency are greater than 90% of rated condition.

iv. A fused 10 amp switched 24VDC power supply circuit shall be provided for customer use. DC power shall be available from this circuit whenever the generator set is running.

v. A fused 10 amp switched 24VDC power supply circuit shall be provided for customer use. DC power shall be available from the circuit at all times from the engine starting/control batteries.

vi. The control shall be provided with a direct serial communication link for a generic universal communication network interface as described elsewhere in this specification and shown on the drawings.

2.5 FUEL SYSTEM

The fuel system for the engine generator set shall conform to the requirements of NFPA 30 and NFPA 37 and contain the following elements:

A. Main Pump: Each engine shall be provided with an engine driven pump. The pump shall supply fuel at a minimum rate sufficient to provide the amount of fuel required to meet the performance indicated within the parameter schedule. The fuel flow rate shall be based on meeting the load requirements and all necessary recirculation.

B. Filter: A minimum of one full flow fuel filter shall be provided for each engine. The filter shall be readily accessible and capable of being changed without disconnecting the piping or disturbing other components. The filter shall have inlet and outlet connections plainly marked.

C. Relief/Bypass Valve: A relief/bypass valve shall be provided to regulate pressure in the fuel supply line, return excess fuel to a return line, and prevent the build-up of excessive pressure in the fuel system.

D. Integral Main Fuel Storage Tank: Tank shall be factory installed and provided as an integral part of the diesel generator manufacturer’s product. Tank shall be provided with connections for fuel supply line, fuel return line, local fuel fill port, gauge, vent line, and float and leak detection switch assemblies. A fuel return line cooler shall be provided as recommended by the manufacturer and assembler. The temperature of the fuel returning to the tank shall be below the flash point of the fuel.

i. Capacity, Standby: Tank shall have capacity to supply fuel to the engine for an uninterrupted 12-hour period at 100% rated load plus 6-hours of no-load testing (one half-hour test per month), for twelve months) without being refilled, including allowances for recirculated fuel.

ii. Design Features:

a. Double walled steel construction with continuously welded seams, and diked rupture basin for the containment of fuel resulting from a tank leak or rupture. The rupture basin shall be integrally vented and have a closed top to prevent the ingress of precipitation, debris, or other elements.

b. Internal baffles arranged to prevent recirculation of heated return fuel.

c. Tank shall be leak tested to minimum 3 psi and pressure tested to minimum 15 psi.

d. Local fuel fill port on the tank shall be provided with a screw-on cap.

iii. Fuel Level Controls: Tank shall be provided with a float-switch assemble to perform the following functions:

a. Activate the “low Fuel Level” alarm at 50% of the rated tank capacity.

b. Activate the “Overfill Fuel Level” alarm at 95% of the rated tank capacity.

iv. Leak Detection: Tank shall be provided with an interstitial space leak sensor for leak detection alarm.

v. Arrangement: Integral tanks may allow gravity flow into the engine. Gravity flow tanks and any tank that allows a fuel level above the fuel injectors shall be provided with an internal or external factory installed valve located as near as possible to the shell of the tank. The valve shall close when the engine is not operating. Integral tanks shall be provided with any necessary pumps to supply fuel to the engine as recommended by the generator set manufacturer. The fuel supply line from the tank to the manufacturer’s standard engine connection shall be welded pipe.

PART 3 – EXECUTION

3.1 SEQUENCE OF OPERATION

A. Generator set shall start on receipt of a start signal from remote equipment. The start signal shall be via hand wired connection to the generator set control.

B. The generator set shall complete a time delay start period as programmed into the control.

C. The generator set control shall initiate the starting sequence for the generator set. The starting sequence shall include the following functions:

i. The control system shall verify that the engine is rotating when the starter is signaled to operate. If the engine does not rotate after two attempts, the control system shall shut down and lock out the generator set, and indicate “fail to crank” shutdown.

ii. The engine shall fire and accelerate as quickly as practical to start disconnect speed. If the engine does not start, it shall complete a cycle cranking process as described elsewhere in this specification. If the engine has not started by the completion of the cycle cranking sequence, it shall be shut down and locked out, and the control system shall indicate “fail to start”.

iii. The engine shall accelerate to rated speed and the alternator to rated voltage. Excitation shall be disabled until the engine has exceeded programmed idle speed, and regulated to prevent over voltage conditions and oscillation as the engine accelerates and the alternator builds to rated voltage.

iv. On reaching rated speed and voltage, the generator set shall operate as dictated by the control system in isochronous state.

v. When all start signals have been removable from the generator set, it shall complete a time delay stop sequence. The duration of the time delay stop period shall be adjustable by the operator.

vi. On completion of the time delay stop period, the generator set control shall switch off the excitation system and shall shut down.

vii. Any start signal received after the time stop sequence has begun shall immediately terminate the stopping sequence and return the generator set to isochronous operation.

3.2 FACTORY TESTING

A. The generator set manufacturer shall perform a complete operational test at 0.8 power factor on the generator set prior to shipping from the factory. A certified test report shall be provided. Equipment supplied shall be fully tested at the factory for function and performance.

B. Generator set factory tests on the equipment shall be performed at rated load and rated power factor. Generator sets that have not been factory tested at rated power factor will not be acceptable. Tests shall include: run at full load, maximum power, voltage regulation, transient and steady-state governing, single step load pickup, and functions of safety shutdowns.

3.3 INSTALLATION

A. Equipment shall be installed by the contractor in accordance with final submittals and contract documents. Installation shall comply with applicable state and local codes as required by the authority having jurisdiction. Install equipment in accordance with manufacturer’s instructions and instructions included in the listing or labeling of UL listed products.

B. Installation of equipment shall include furnishing and installing all interconnecting wiring between all major equipment provided for the onsite power system. The

contractor shall also perform interconnecting wiring between equipment sections (when required), under the supervision of the equipment supplier.

C. Equipment shall be installed on concrete housekeeping pads. Equipment shall be permanently fastened to the pad in accordance with manufacturer's instructions and seismic requirements of the site.

D. Equipment shall be initially started and operated by representatives of the manufacturer.

E. All equipment shall be physically inspected for damage. Scratches and other installation damage shall be repaired prior to final system testing. Equipment shall be thoroughly cleaned to remove all dirt and construction debris prior to initial operation and final testing of the system.

3.4 ONSITE ACCEPTANCE TEST

A. The complete installation shall be tested for compliance with the specification following completion of all site work. Testing shall be conducted by representatives of the manufacturer, with required fuel supplied by contractor. The Engineer shall be notified in advance and shall have the option to witness the tests.

B. Installation acceptable tests to be conducted onsite shall include a "cold start" test, a two hour full load test, and a one step rated load pickup test in accordance with NFPA 110. Provide a resistive load bank and make temporary connections for full load test, if necessary.

C. Perform a power failure test on the entire installed system. This test shall be conducted by opening the power supply from the utility service, and observing proper operation of the system. Coordinate timing and obtain approval for start of test with site personnel.

3.5 SERVICE AND SUPPORT

A. The manufacturer of the generator set shall maintain service parts inventory at a central location which is accessible to the service location 24 hours per day, 365 days per year.

B. The generator set shall be serviced by a local service organization that is trained and factory certified in generator set service. The supplier shall maintain an inventory of critical replacement parts at the local service organization, and in service vehicles. The service organization shall be on call 24 hours per day, 365 days per year.

C. The manufacturer shall maintain model and serial number records of each generator set provided from at least 20 years.

3.6 WARRANTY

A. The generator set and associated equipment shall be warranted for a period of not less than 5 years from the date of commissioning against defects in materials and workmanship.

B. The warranty shall be comprehensive. No deductibles shall be allowed for travel time, service hours, repair parts cost, etc.

END SECTION

SECTION 16413 – AUTOMATIC TRANSFER SWITCH

PART 1 – GENERAL

1.1 SUMMARY

A. Drawings and general provisions of the Contract, including General and Supplementary Conditions and Division 01 Specification Sections, apply to this Section.

1.2 DESCRIPTION OF WORK

A. This Section includes transfer switches rated 600V and less, including the following:

i. Automatic transfer switches.

1.3 RELATED DOCUMENTS

A. Related Sections include 16235 Emergency/Standby Power Systems Generator Set.

1.4 SUBMITTALS

A. General:

i. Technical data on all major components of all transfer switches and other products described in this section. Data is required for the transfer switch mechanism, control system, cabinet, and protective devices specifically listed for use with each transfer switch. Include steady state and fault current ratings, weights, operating characteristics, and furnished specialties and accessories.

ii. Single Line Diagram: Show connections between transfer switch, power sources and load.

B. Product Data: For each type of product indicated. Include rated capacities, weights, operating characteristics, furnished specialties, and accessories.

i. Dimensioned outline drawings of assembly, including elevations, sections, and details including minimal clearance, conductor entry provisions, gutter space, installed features and devices and material lists for each switch specified.

ii. Internal electrical wiring and control drawings.

iii. Interconnection wiring diagrams, showing recommended conduit runs and point-to-point terminal connections to generator set.

iv. Installation and mounting instructions, including information for proper installation of equipment to meet seismic requirements.

C. Shop Drawings: Dimensioned plans, elevations, sections, and details showing minimum clearances, conductor entry provisions, gutter space, installed features and devices, and material lists for each switch specified.

i. The term “withstand” means “the unit will remain in place without separation of any parts from the device when subjected to the seismic forces specified and the unit will be fully operational both during and after the seismic event.

ii. Seismic certification, as required for site conditions. Seismic certifications shall be third-party certified, and based on testing. Certification based on calculations does not meet this requirement.

iii. Dimensioned Outline Drawings of Equipment Unit: Identify center of gravity and locate and describe mounting and anchorage provisions.

iv. Detailed description of equipment anchorage devices on which the certification is based on their installation requirements. Coordinate paragraph below with qualification requirements in Division 01 Section “Quality Requirements” and as supplemented in “Quality Assurance” Article.

D. Manufacturer Seismic Qualifications Certification:

Include the following:

i. The transfer switch manufacturer shall be certified to ISO 9001 International Quality Standard and shall have third party certification verifying quality assurance in design/development, production, installation, and service, in accordance with ISO 9001.

ii. The manufacturer of this equipment shall have produced similar equipment for a minimum period of 10 years. When requested, an acceptable list of installation with similar equipment shall be provided demonstrating compliance with this requirement.

E. Manufacturer and Supplier Qualification Data:

i. Features and operating sequences, both automatic and manual.

ii. List of all factory settings of relays, timers and protective devices; provide setting and calibration instructions where applicable.

F. Operation and Maintenance Data: For each type of product include in emergency, operation, and maintenance manuals.

G. Warranty documents demonstrating compliance with the project’s contract requirements.

1.5 CODE AND STANDARDS

A. Electrical Components, Devices, and Accessories: Listed and labeled as defined in NFPA 70, Article 100, by a testing agency acceptable to authorities having jurisdiction, and marked as suitable for use in emergency, legally required or optional standby use as appropriate for the connected load.

i. Transfer switches and enclosures shall be UL 1008 listed and labeled as suitable for use in emergency, legally required, and optional standby applications.

ii. CSA 282, Emergency Electrical Power Supply for Buildings, and CSA C22.2, No. 14-M91 Industrial Control Equipment.

iii. NFPA 70, National Electrical Code. Equipment shall be suitable for use in systems in compliance with Articles 700, 701 and 702.

iv. Comply with NEMA ICS 10-1993 AC Automatic Transfer Switches.

v. IBC 2012 – The transfer switch(es) shall be prototype-tested and third-party certified to comply with the requirements of IBC group III or IV, Category D/F. The equipment shall be shipped with the installation instructions necessary to attain installation compliance.

vi. IEEE 446 – Recommended Practice for Emergency and Standby Power Systems for Commercial and Industrial Applications.

vii. EN55011, Class B Radiated Emissions and Class B Conducted Emissions.

viii. IEC 1000-4-5 (EN 61000-4-5); AC Surge Immunity.

ix. IEC 1000-4-4 (EN 61000-4-4) Fast Transients Immunity.

x. IEC 1000-4-2 (EN 61000-4-2) Electrostatic Discharge Immunity.

xi. IEC 1000-4-3 (EN 61000-4-3) Radiated Field Immunity.

xii. IEC 1000-4-6 Conducted Field Immunity.

xiii. IEC 1000-4-11 Voltage Dip Immunity.

xiv. IEEE 62.41, AC Voltage Surge Immunity.

xv. IEEE 62.45, AC Voltage Surge Testing.

B. Comply with NFPA 110 – Emergency and Standby Power Systems. The transfer switch shall meet all requirements for Level 1 systems, regardless of the actual circuit level.

C. The manufacturer shall warrant the material and workmanship of the transfer switch equipment for a minimum of two (2) years from the warranty start date. The warranty start date is the date of registered commissioning and start up or eighteen (18) months from date of shipment, whichever is sooner.

D. The warranty shall be comprehensive. No deductibles shall be allowed for travel time, service hours, repair parts cost, and etc. during the minimum noted warranty period described above.

1.6 PROJECT CONDITIONS

A. Size and location of concrete bases anchor bolt inserts shall be coordinated. Concrete, reinforcement and formwork must meet the requirements specified in Division 03. See Section “INSTALLATION” for additional information on installation.

PART 2 – PRODUCTS

2.1 AUTOMATIC TRANSFER SWITCH

A. Manufacturers: Subject to compliance with requirements, provide products by one of the following: Eaton, Cummings, Hawthorne Cat or equal. Shall be compatible with provided genset.

B. Equipment specifications for this Project are based on automatic transfer switches from major manufacturers listed above. Switches manufactured by other manufacturers that meet the requirement of this specification are acceptable, if approved not less than two weeks before scheduled bid date. Proposals must include a line-by-line compliance statement based on this specifications.

C. Transfer switches utilizing molded case circuit breakers do not meet the requirements of this specification and will not be accepted.

2.2 MANUFACTURERS

A. Provide transfer switches in the number and ratings that are shown on the drawings.

B. Indicated Current Ratings: Apply as defined in UL 1008 for continuous loading and total system transfer.

C. Fault-Current Closing and Withstand Ratings: UL 1008 WCR ratings must be specifically listed as meeting the requirements for use with protective devices at installation locations, under specified fault conditions. Withstand and closing ratings shall be based on use of the same set of contacts for the withstand test and the closing test.

D. Solid-State Controls: All settings should be accurate to +/-2% or better over an operating temperature range of - 40 to + 60 degrees C (- 40 + 140 degrees F).

E. Resistance to Damage by Voltage Transients: Components shall meet or exceed voltage-surge withstand capability requirements when tested according to IEEE C62.41. Components shall meet or exceed voltage-impulse withstand test of NEMA ICS 1.

F. Electrical Operation: Accomplished by a non-fused, momentarily energized solenoid or electric motor operator mechanism, mechanically and electrically interlocked in both directions (except that mechanical interlock is not required for closed transition switches).

   i. Switches using molded-case switches or circuit breakers, or insulated case circuit breaker components are not acceptable.

   ii. Transfer switches shall be double-throw, electrically and mechanically interlocked, and mechanically held in the Source 1 and Source 2 positions.

   iii. Main switch contacts shall be high pressure silver alloy. Contact assemblies shall have arc chutes for positive arc extinguishing. Arc chutes shall have insulating covers to prevent inter-phase flashover.

   iv. Contacts shall be operated by a high-speed electrical mechanism that causes contacts to open or close within three electrical cycles from signal.

   v. Transfer switch shall be provided with flame retardant transparent covers to allow viewing of switch contract operation but prevent direct contact with components that could be operating at line voltage levels.

      a. Phase angle monitoring/timing equipment is not an acceptable substitute for this functionality.

   vi. The transfer switch shall include the mechanical and control provisions necessary to allow the device to be field-configured for operating speed. Transfer switch operation with monitor loads shall be as is recommended in NEMA MG1.

   vii. Transfer switches shall have a full current-rated switched neutral.

G. Switch Characteristics: Designed for continuous-duty repetitive transfer of full-rated current between active power sources.

H. Control: Transfer switch control shall be capable of communicating with the genset control, other switches and remote programming devices over a high-speed network interface.

I. Factory wiring: Transfer switch internal wiring shall be composed of premanufactured harnesses that are permanently marked for source and destination. Harnesses shall be connected to the control system by means of locking disconnect plug(s), to allow the control system to be easily disconnected and serviced without disconnecting power from the transfer switch mechanism.

J. Terminals: Terminals shall be pressure type and appropriate for all field wiring. Control wiring shall be equipped with suitable lugs, for connection to terminal strips.

i. The enclosure shall provide wire bend space in compliance to the latest version of NFPA 70, regardless of the direction from which the conduit enters the enclosure.

ii. Exterior cabinet doors shall provide complete protection for the system's internal components. Doors must have permanently mounted key-type latches. Bolted covers or doors are not acceptable.

iii. Transfer switches shall be provided in enclosures that are third party certified for their intended environment per NEMA requirements.

K. Enclosures: All enclosures shall be third-party certified for compliance to NEMA ICS 6 and UL 508, unless otherwise indicated.

2.3 GENERAL TRANSFER-SWITCH PRODUCT REQUIREMENTS

A. Comply with requirements for Level 1 equipment according to NFPA 110.

i. Refer to the Project drawings for specifications on the sizes and types of transfer switch equipment, withstand and closing ratings, number of poles, voltage and ampere ratings, enclosures type, and accessories.

ii. Main contacts shall be rated for 600 VAC minimum.

iii. Transfer switches shall be rated to carry 100% of rated current continuously in the enclosure supplied, in ambient temperatures of - 40 to + 60 degrees C (- 40 to +140 degrees F), relative humidity up to 95% (non-condensing), and altitudes up to 10,000 feet (3000 meters).

B. Indicated current ratings: 1200amp.

C. Relay Signal: Control shall include provisions for addition of a pre-transfer relay signal, adjustable from 0 to 60 seconds, to be provided if necessary for elevator operation, based on equipment provided for the project.

D. Control: Transfer switch control shall be provided with necessary equipment and software to communicate with the genset control, other transfer switches, remote annunciation equipment, and other devices over a high speed control network.

E. Transfer switch neutral bus shall be sized to carry 100% of the current designated on the switch rating.

F. The transfer switch physically located closest to the generator and not more than 50 ft (15 meters) away, except those served by generator paralleling equipment, shall be provided with a battery charger suitable for the requirements of the application and in compliance with NFPA 110 requirements for Level 1 systems. If no transfer

switch is located within this distance, a battery charger shall be installed on the generator set.

i. The transfer switch control system shall be configurable in the field for any operating voltage level up to 600 VAC. Voltage sensing shall be monitored based on the normal voltage at the site. Systems that utilize voltage monitoring based on standard voltage conditions that are not field configurable are not acceptable.

ii. All transfer switch sensing shall be configurable from an operator panel or from a Windows XP or later PC-based service tool. Designs utilizing DIP switches or other electromechanical devices are not acceptable.

iii. The transfer switch shall be configurable to accept a relay contact signal and a network signal from an external device to prevent transfer to the generator service.

iv. The transfer switch shall provide a relay contact signal prior to transfer or retransfer. The time period before and after transfer shall be adjustable in a range of 0 to 60 seconds.

v. The control system shall be designed and prototype tested for operation in ambient temperatures from - 40 degrees C + 60 degrees C (- 40 + 140 degrees F). It shall be designed and tested to comply with the requirements of the noted voltage and RFI/EMI standards.

vi. The control shall have optically isolated logic inputs, high isolation transformers for AC inputs and relays on all outputs, to provide optimum protection from line voltage surges, RFI and EMI.

vii. The transfer switch network monitoring equipment, when supplied, shall be provided with a battery-based auxiliary power supply to allow monitoring of the transfer switch when both AC power sources are non-operational.

G. Automatic Transfer Switch Control Features.

i. Visual indication of the following:

a. Which source the load is connected to (Source 1 or Source 2).

b. Which source or sources are available?

c. When switch is not set for automatic operation, the control is disabled.

d. When the switch is in test/exercise mode.

ii. The indicator panel LEDs shall display:

a. Activate pre-programmed test sequence.

b. Override programmed delays, and immediately go to the next operation.

c. Reset the control by clearing any faults.

d. Test all of the LEDs by lighting them simultaneously.

iii. The indicator shall have pushbuttons that allow the operator to activate the following functions:

a. AC voltage for all phases, normal and emergency.

b. Source status: connected or not connected.

iv. The alphanumeric digital display shall be vacuum fluorescent-type, clearly visible in both bright sunlight and no-light conditions over an angle of 120 degrees, and shall display the following:

a. Set nominal voltage and frequency for the transfer switch.

b. Adjust voltage and frequency sensor operation set points.

c. Set up load sequence functions.

d. Set up load sequence functions.

e. Enable or disable control functions including program transition.

f. View real-time clock data, operation log (hours connected, times transferred, failures) and service history.

v. The display panel shall be password-protected, and allow the operator to view and make adjustments.

H. Transfer Switch Control Panel: The transfer switch shall have a microprocessor-based control with a sealed membrane panel incorporating pushbuttons for operator-controlled functions, and LED lamps for system status indicators. The panel shall also include an alphanumeric display for detailed system information. Panel display and indicating lamps shall include permanent labels.

i. Generator/ATS Status:

a. Engine start (prevents nuisance genset starts in the event of momentary power fluctuation): 0 to 120 seconds (default 3 sec).

b. Transfer normal to emergency (allows genset to stabilize before load is transferred): 0 to 120 seconds (default 3 sec).

c. Re-transfer emergency to normal (allows utility to stabilize before load is transferred from genset): 0 to 30 minutes (default 3 sec).

d. Engine cooldown: 0 to 30 minutes (default 10 min).

e. Programmed transition: 0 to 60 seconds (default 3 sec).

ii. Software adjustable time delays

iii. Under-voltage sensing: three-phase normal, three-phase emergency source.

iv. Over-voltage sensing: three-phase normal, three-phase emergency source.

a. Pickup: +/- 5 to +/- 20% of nominal frequency (default 10%).

b. Dropout: +/-1% beyond pickup (default 1%).

c. Dropout time delay: 0.1 to 15.0 seconds (default 5 sec).

d. Accurate to within +/- 0.05 Hz.

v. Over/under frequency sensing:

a. Dropout: 2 to 10% (default 4%).

b. Pickup: 90% of dropout.

c. Time delay: 2.0 to 20 seconds (default 5 sec).

vi. Voltage imbalance sensing:

a. Time delay: 100 msec.

vii. Phase rotation sensing:

a. Time delay: 100 msec.

viii. Loss of single-phase detection.

I. Control Functions: Functions managed by the control shall include:

i. Programmable genset exerciser: A field-programmable control shall periodically start and run the generator with or without transferring the load for a preset time period, then re-transfer and shut down the generator after a preset cool-down period.

ii. In event of a loss of power to the control settings, real-time clock setting and the engine start-time delay setting will be retained.

iii. The system continuously logs information including then number of hours each source has been connected to the load, the number of times transferred, and the total number of times each source has failed. An event recorder stores information, including time and date-stamp, for up to 50 events.

iv. Re-Transfer inhibit Switch: Inhibits automatic re-transfer control so automatic transfer switch will remain connected to emergency power source as long as it is available regardless of condition of normal source.

v. Transfer Inhibit Switch: Inhibits automatic transfer control so automatic transfer switch will remain connected to normal power source regardless of condition of emergency source.

J. Control features shall include:

i. Provide one set Form C auxiliary contacts on both sides, operated by transfer switch position, rated 10 amps 250 VAC.

ii. The transfer switch shall be provided with a network communication card, and configured to allow network-based communications with the transfer switch and other network system components, including the generator set(s) provided for the Project.

K. Control Interface:

i. One isolated and normally closed pair of contacts rate 10A at 32 VDC minimum.

L. Engine Starting Contacts

2.4 AUTOMATIC TRANSFER SWITCHES

A. Indicators:

i. Sources available, as defined by actual pickup and dropout settings of transfer-switch controls.

ii. Switch position.

iii. Switch in test mode.

iv. Failure of communication link.

B. Functional Description: Remote annunciator panel shall annunciate conditions for indicated transfer switches. Annunciation shall include the following:

i. Indicating Lights: Grouped for each transfer switch monitored.

ii. Label each group, indicating transfer switch it monitors, location of switch, and identity of load it serves.

iii. Switch in test mode.

iv. Lamp Test: Push-to-test or lamp-test switch on front panel.

C. Annunciator Panel: LED-lamp type with audible signal and silencing switch.

D. Malfunction of annunciator or communication link shall not affect functions of automatic transfer switch. In the event of failure of communication link, automatic transfer switch automatically reverts to stand-alone, self-contained operation.

E. Automatic transfer-switch sensing, controlling, or operating function shall not depend on remote panel for proper operation. The remote annunciation system shall not prevent transfer to the alternate source when the primary power source fails, nor prevent return to the primary source if the alternate source fails.

2.5 Remote annunciator system of connection to site SCADA system.

PART 3 – EXECUTION

3.1 GENERAL

A. Design each fastener and support to carry load indicated by seismic requirements and according to seismic-restraint details. See Division 26 Section “Vibration and Seismic Controls for Electrical Systems.”

i. Concrete Bases: 4-inches (100 mm) high, reinforced, with chamfered edges. Extend base no more than 4-inches (100 mm) in all directions beyond the maximum dimensions of switch, unless otherwise indicated or unless required for seismic support.

ii. Floor-mounted transfer switches (except drawout switches supported by wheeled carriages, which must be rolled out at floor level) shall be mounted on concrete bases complying with the following requirements:

a. Floor-Mounting Switch: Anchor to floor by bolting.

b. Annunciator Panel Mounting: Flush in wall, unless otherwise indicated.

c. Set field-adjustable intervals and delays, relays, and engine exercise clock.

d. Provide certification of IBC Seismic compliance.

3.2 INSTALLATION

A. Wiring to Remote Components: Match type and number of cables and conductors to control and communication requirements of transfer switches as recommended by manufacturer. Increase raceway sizes at no additional cost to Owner if necessary to accommodate required wiring.

B. Field control connections shall be made on a common terminal block that is clearly and permanently labeled.

C. Transfer switch shall be provided with AL/CU mechanical lugs sized to accept the full output rating of the switch. Lugs shall be suitable for the number and size of conductors shown on the drawings.

3.3 CONNECTIONS

A. Prior to shipping, factory shall test and inspect components, assembled switches, and associated equipment to ensure proper operation.

B. Factory shall check transfer time and voltage, frequency, and time-delay settings for compliance with specified requirements.

C. Factory shall perform dielectric strength test complying with NEMA ICS 1.

3.4 SOURCE QUALITY CONTROL

A. Manufacturer's Field Service: The supplier of the transfer switch(es) and associated equipment shall inspect, test, and adjust components, assemblies, and equipment installations, including connections, and report results in writing.

B. Manufacturer's representative shall perform tests and inspections and prepare test reports.

i. Perform recommended installation tests as recommended in manufacturer's installation and service manuals.

a. Simulate power failures of normal source to automatic transfer switches and of emergency source with normal source available.

b. Verify time-delay settings.

c. Verify that the transfer switch is accurately metering AC voltage.

d. Verify proper sequence and correct timing of automatic engine staring, transfer time delay, retransfer time delay on restoration of normal power, and engine cool-down and shutdown.

ii. After energizing circuits, demonstrate interlocking sequence and operational function for each switch.

3.5 DEMONSTRATION

A. Software:

i. The software shall allow adjustment of all functions described herein, adjustment of operating levels of all protective functions, and programming of all optional functions in the controller. Adjustments shall be possible over modem from a facility that is remote from the generator set.

ii. The software shall be capable of storing and displaying data for any function monitored by the generator set control. This data shall be available in common file formats, and on graphical “strip chart” displays.

iii. The software shall automatically record all control operations and adjustments performed by any operator or software user, for tracking of changes to the control.

iv. The software shall display all warning, shutdown, and status changes programmed into transfer switch controller. For each event, the control shall provide information on the nature of the event, when it last occurred, and how many times it has occurred.

B. The manufacturer shall supply the Service Provider with a complete set of the service and maintenance software required to support the product.

END SECTION

SECTION 16483 – VARIABLE FREQUENCY DRIVES

PART 1 – GENERAL

1.1 SCOPE

A. This specification defines the minimum requirements for Variable Frequency Drives (VFD) and accessories for speed control of either constant or variable torque loads.

1.2 RELATED WORK: NONE

1.3 REFERENCES

A. UL 508C

B. CE

C. NEC

D. Canadian Underwrites Laboratory (CUL)

E. ISO 9001

F. IEEE519-2014

PART 2 – PRODUCTS

2.1 ACCEPTABLE MANUFACTURERS

A. Danfoss VLT® AQUA Series VFD (Variable Frequency Drive)

2.2 GENERAL

A. Furnish complete VFD as specified herein or in the equipment schedule for loads designated to be variable speed. VFD's shall be user-selectable for either constant or variable torque loads.

B. Three-Phase Units: The VFD shall convert incoming fixed frequency three-phase AC power into a variable frequency and voltage for controlling the speed of three-phase AC induction motors. The VFD shall be a six-pulse input design, and the input voltage rectifier shall employ a full wave diode bridge; VFD's utilizing controlled SCR rectifiers shall not be acceptable. The output waveform shall closely approximate a sine wave. The VFD shall be of a PWM output design utilizing current IGBT inverter technology and voltage vector control of the output PWM waveform.

C. Single Phase Units: The VFD shall convert incoming fixed frequency single-phase AC power into a variable frequency and voltage for controlling the speed of three-phase AC induction motors. The VFD shall be UL-listed for phase converting. The

VFD shall be a six-pulse input design, and the input voltage rectifier shall employ a full wave diode bridge; VFD's utilizing controlled SCR rectifiers shall not be acceptable. The output waveform shall closely approximate a sine wave. The VFD shall be of a PWM output design utilizing current IGBT inverter technology and voltage vector control of the output PWM waveform.

D. The VFD shall include a full-wave diode bridge rectifier and maintain a displacement power factor of near unity regardless of speed and load.

E. The manufacturer of the VFD shall demonstrate a continuous period of manufacturing and development of VFD's for a minimum of 40 years. VFD's that are brand-labeled are not acceptable.

F. The VFD shall produce an output waveform capable of handling maximum motor cable distances of up to 1,000 ft. (unshielded) without tripping or derating.

G. The VFD shall utilize VVC^{PLUS}, an output voltage-vector switching algorithm, or equivalent, in both variable and constant torque modes. VVC^{PLUS} provides rated RMS fundamental voltage from the VFD. This allows the motor to operate at a lower temperature rise, extending its thermal life. VFD's that cannot produce rated RMS fundamental output voltage or require the input voltage to be increased above motor nameplate value to achieve rated RMS fundamental output voltage are not acceptable. VFD's that utilize Sine-Coded PWM or Look-up tables shall not be acceptable.

H. The VFD selected must be able to source the motor's full load nameplate amperage (fundamental RMS) on a continuous basis, and be capable of running the motor at its nameplate RPM, voltage, current, and slip without having to utilize the service factor of the motor.

I. The VFD shall offer a programmable motor parameter that allows the total number of poles of a motor to be programmed to optimize motor performance.

J. VFD shall automatically boost power factor at lower speeds.

K. The VFD will be capable of running either variable or constant torque loads. In variable torque applications, the VFD shall provide a CT-start feature and be able to provide full torque at any speed up to the base speed of the motor. In either CT or VT mode, the VFD shall be able to provide its full rated output current continuously and 110% of rated current for 60 seconds.

L. An Automatic Energy Optimization (AEO) selection feature shall be provided in the VFD to minimize energy consumption in variable torque applications. This feature shall optimize motor magnetization voltage and shall dynamically adjust output voltage in response to load, independent of speed. Output voltage adjustment based on frequency alone is not acceptable for single motor VT configurations.

M. For multi-motor variable torque configurations, user-selectable load profile curves including VT-High, VT-Medium, and VT-Low shall be provided to ensure easy

commissioning and improved energy efficiency. VFD's requiring the operator to assign load torque data-points to create a V/Hz profile, are not acceptable.

N. An initial ramp function shall be available to provide a user-selectable ramp, up to 60 seconds, for applications requiring a faster or slower ramp than the normal ramp.

O. A Dual Ramp Down feature shall include a Check Valve Ramp Down and a final Ramp feature. The Check Valve Ramp Down shall be programmable to gently seat a check valve and reduce the potential of damage from excess pressure while shutting-down the system. Both time and end speed shall be programmable. On the Final Ramp, the VFD shall be programmable to quickly stop the motor after seating of a check valve or for a more rapid stopping than the normal ramp down setting.

P. VFD shall offer up to 4 separate PID controllers. One controller shall operate the drive in closed loop, while the other 3 provide control signals to other equipment. VFD's with PI controllers only are not acceptable.

Q. An Autotuning PI controller output feature shall provide automated PI controller settings. Once the user accepts the settings, the VFD will save the settings to memory.

R. An empty pipe fill mode shall be available to fill an empty pipe in a short period of time, and then revert to the PID controller for stable operation. Pipe fill mode shall have a programmable time to reduce water hammer in the system or fill the pipe at a unit per time rate.

S. VFD shall offer a motor spinning test that will run the motor at 5 Hz until the OK button is pressed. This feature will allow the use to determine if the motor is running in the correct direction.

T. An embedded cascade pump controller shall be included to provide lead pump alternation and provide control for up to 3 total pumps. The VFD Pump and 2 other pumps can be controlled either by a starter or softstarter.

U. Switching of the input power to the VFD shall be possible without interlocks or damage to the VFD at a minimum interval of 2 minutes.

V. Switching of power on the output side between the VFD and the motor shall be possible with no limitation or damage to the VFD and shall require no additional interlocks.

W. An Automatic Motor Adaptation (AMA) function shall measure motor stator resistance and reactance to optimize performance and efficiency. It shall not be necessary to spin the motor shaft or de-couple the motor from the load to accomplish this optimization. Additionally, the parameters for motor resistance and motor reactance shall be user-programmable.

X. The VFD shall have temperature controlled cooling fans for quiet operation, minimized internal losses, and greatly increased fan life. The VFD shall be equipped

with an intelligent heat management system and will remove 85% of the heat losses via finned heat sinks, which transfer the heat to the back-channel cooling air. This back-channel shall be separated from the electronics area by an NEMA 12/IP54 seal in an effort to reduce contamination of the control electronics area, resulting in longer life and higher reliability. The remaining 15% of heat losses shall be removed from the control electronics area using lower-volume door fans. The VFD shall be designed to remove the excess heat from the backchannel to be either dispersed into the control room or it can be directly removed from the building via added ductwork.

Y. VFD shall provide full torque to the motor, given input voltage fluctuations of up to +10% to -10% of the rated input voltage (525 to 690VAC, 380 to 480VAC, or 200 to 240VAC). Line frequency variation of ± 2% shall be acceptable.

2.3 HARMONICS

A. The VFD shall provide internal DC link reactors to minimize power line harmonics and to provide near unity power factor. DC Link reactor shall be installed so that power fluctuations to the DC Capacitors shall be reduced to increase Capacitor life. VFD's without a DC link reactor shall provide a 5% impedance line side reactor and provide spare capacitors.

B. The VFD shall be provided with line-side harmonic reduction, as required, to ensure that the current distortion limits, as defined in Table 2 of IEEE 519-2014, while at varying loads are met. The PCC_1, defined as the low voltage side of the distribution transformer, is used for purposes of calculation and referred, by the turns ratio of the transformer, to the PCC defined by the IEEE Recommended Practices as the Consumer-Utility interface. The tables of limits set forth therein are with reference to the PCC (primary side of the main transformer).

C. Harmonic solutions shall be designed to withstand up to 2% line imbalances with the maximum Current Distortion not to exceed 11% at 100% load.

D. Harmonic solutions shall be capable of withstanding up to 2% ambient voltage distortion with the maximum Current Distortion not to exceed 12% at 100% load.

E. To ascertain the harmonic contribution of the VFD's at the PCC and to show compliance with IEEE 519-2014, harmonic analysis shall be performed and submitted with the bide package, provided that the VFD vendor is in receipt of the below listed information 10 working days prior to the bid date.

   i. kVA rating of the low voltage distribution transformer(s)

   ii. X/R Ratio of utility low voltage distribution transformer(s)

   iii. Primary voltage

   iv. Secondary voltage

v. Length, size, & number of conductors between transformer LV side and distribution panel

vi. System Single Line Diagram and electrical equipment list showing transformer and VFD detail

vii. Total linear load kW to be connected to the distribution transformer

viii. Anticipated maximum demand load (15 minute or 30 minute) on the distribution transformer (IEEE 519)

F. Low Harmonic Drive (LHD) (integral Active Filter) (avail. 250 HP to 600 HP).

i. The VFD shall be of a design that incorporates the Active Harmonic Filter as part of the drive package. The Low Harmonic Drive shall be of the 6 pulse design and the filter portion shall use at least 90% of the actual drive components to reduce complexity and insure commonality of spare parts.

ii. The LHD shall maintain performance independent of load or grid changes.

iii. The LHD shall maintain a true power factor greater than 0.98 over the entire load range.

iv. There shall be no boosted DC voltage on the drive so as to cause low motor insulation stress.

v. The Active Filter portion shall be in parallel with the VFD so if taken off line the VFD will continue to function.

vi. Programming of the Active Filter Portion will be done with a Local Display identical to the VFD Display.

vii. The performance of the LHD shall meet IEEE519-1992 under the entire load range of the drive.

G. Multi-pulse Technology (12 pulse/18 pulse)

i. The VFD shall incorporate (12 pulse) (18 pulse) technology to assist in harmonic mitigation.

ii. The 12 pulse solution will provide 10% THDD at full load, the 18 pulse solution shall provide 5% THDD at full load harmonic at the PCC. Current distortion shall be within the limits of Table 2-02A.

2.4 PROTECTIVE FEATURES

A. VFD shall have input surge protection utilizing MOV's, spark gaps, and Zener diodes to withstand surges of 2.3 times line voltage for 1.3 msec.

B. VFD shall include circuitry to detect phase imbalance and phase loss on the input side of the VFD.

C. VFD shall auto-derate the output voltage and frequency to the motor if an input phase is lost. This result will maintain operation without decreasing the life expectancy of the VFD. The use of this feature shall be user selectable and export a warning during the event.

D. Printed Circuit boards shall be conformal coated to reduce the corrosion effect from environmental gases and other conditions. The conformal coating must meet IEC 61721-3-3, Class 3C2 as standard and the VFD shall have an optional 61721-3-3, Class 3C3 coating available.

E. Automatic “No-Flow Detection” shall be available to detect a no-flow situation in pump systems where all valves can be closed. This shall be functional in closed loop control or when controlled by an external signal.

F. Dry-pump detection shall be available to detect if the pump has run dry. If this condition occurs, the drive will be safely stopped. A timer shall be included to prevent nuisance tripping.

G. End-of-Pump curve detection shall stop motor when the pump is operating outside of its programmed pump curve.

H. VFD shall provide a flow compensation program to reduce energy by adjusting the Setpoint to match changes in flow (friction loss). Flow compensation shall also operate in Cascade control mode.

I. VDF shall include current sensors on all three-output phases to detect and report phase loss to the motor. The VFD will identify which of the output phases is low or lost.

J. VFD shall auto-derate the output voltage and frequency to the motor in the presence of sustained ambient temperatures higher than the normal operating range, so as not to trip on an inverter temperature fault. The use of this feature shall be user-selectable and a warning will be exported during the event. Function shall reduce switching frequency before reducing motor speed.

K. VFD shall auto derate the output frequency limiting the output current before allowing the VFD to trip on overload. The speed of the load can be reduced, but not stopped.

L. The VFD shall have the option of an integral FRI filter. VFD enclosures shall be made of metal to minimize RFI and provide immunity.

M. The VFD shall have a motor preheat function with the ability to be programmed to induce a small amount of current to the motor whenever it is at rest. This will prevent condensation inside the motor and help to extend its life without the need for space heaters or other external equipment.

N. The VFD shall be provided with an optional enclosure that is IP-66/Nema 4X rated. A VFD that is mounted in a separate enclosure will not be acceptable. The

enclosure shall be suitable for installations that require protection against windblown dust and rain or splashing water. All cast aluminum parts shall be powder-coated with a durable epoxy that is capable of withstanding harsh environments. All circuit boards shall be conformally coated to meet the requirements of the IEC61721-3-3, Class 3C2 specification.

2.5 INTERFACE FEATURE

A. VFD shall provide an alphanumeric backlit display keypad (LCP) which may be remotely mounted using a standard 9-pin cable. VFD may be operated with keypad disconnected or removed entirely. Keypad may be disconnected during normal operation without the need to stop the motor or disconnect power to the VFD.

B. VFD Keypad shall feature an INFO key that, when pressed, shall display the contents of the programming manual for the parameter that is currently viewed on the display. The description shall explain the feature and how the settings can be made by the operator.

C. VFD shall display all faults in plain text; VFD's which can display only fault codes are not acceptable.

D. The keypad shall feature a 6-line graphical display and be capable of digitally displaying up to five separate operational parameters or status values simultaneously (including process values with the appropriate engineering unit) in addition to Hand/Off/Auto, Local/Remote, and operating status.

E. Two lines of the display shall allow "free text programming" so that a site description or the actual name of the equipment being controlled by the VFD can be entered into the display.

F. Keypad shall provide an integral H-O-A (Hand-Off-Auto) and Local-remote selection capability, and manual control of speed locally without the need for adding selector switches, potentiometers, or other devices.

G. All VFD's shall be of the same series, and shall utilize a common control card and LCP (keypad/display unit) throughout the rating range. The control cards and keypads shall be interchangeable through the entire range of drives used on the project.

H. VFD keypad shall be capable of storing drive parameter values in non0volatile RAM uploaded to it from the VFD, and shall be capable of downloading stored values to the VFD to facilitate programming of multiple drives in similar applications, or as a means of backing up the programmed parameters.

I. VFD Display shall have the ability to display 5 different parameters pertaining to the VFD or the load including: current, speed, DC bus voltage, output voltage, input signal in mA, or other values from a list of 92 different user-selectable parameters.

J. VFD display shall indicate which digital inputs are active and the status of each relay.

K. It shall be possible to toggle between three status read-out screens by pressing the status key. Various operating variables, even with different formatting, can be shown in each status screen.

L. VFD display shall indicate the value of any voltage or current signal, including the engineering units of measurement, connected to the analog input terminals.

M. VFD display shall indicate the value of the current at the analog output terminals, including the engineering units of measurement.

N. A red FAULT light, a yellow WARNING light and a green POWER-ON light shall be provided. These indications shall be visible both on the keypad and on the VFD when the keypad is removed.

O. Two-level password protection shall be provided to prevent unauthorized changes to the programming of the VFD. The parameters can be locked via a digital input and/or the unit can be programmed not to allow an unauthorized user to change the parameter settings.

P. A quick setup menu with factory preset typical parameters shall be provided on the VFD to facilitate commissioning. Use of macros shall not be required.

Q. A digital elapsed time meter and kilowatt hour meter shall be provided in the display.

R. VFD shall offer as standard an internal clock. The internal clock can be used for: Timed Actions, Energy Meter, Trend Analysis, date/time stamps on alarms, Logged data, Preventive maintenance, or other uses. It shall be possible to program the clock for Daylight Saving Time / summertime, weekly working days or non-working days including 20 exceptions (Holidays, etc.). It shall be possible to program a Warning in case the clock has not been reset after a power loss.

S. A battery back-up option shall be provided to maintain internal clock operation during power interruptions. Battery life shall be no less than 10 years or normal operation.

T. VFD shall provide full galvanic isolation with suitable potential separation from the power sources (control, signal, and power circuitry within the drive) to ensure compliance with PELV requirements and to protect PLC's and other connected equipment from power surges and spikes.

U. All inputs and output shall be optically isolated. Isolation boards between the VFD and external control devices shall not be required.

V. There shall be six fully programmable digital inputs for interfacing with the systems external control and safety interlock circuitry. Two of these inputs shall be programmable as inputs or outputs.

W. The VFD shall have two analog signal inputs. Inputs shall be programmable for either 0 -10V or 0/4-20 mA.

X. One programmable analog output shall be provided for indication of the drive status. This output shall be programmable for output speed, voltage, frequency, motor current and output power. The analog output signal shall be 0/4-20 mA.

Y. The VFD shall provide two user programmable relays with 75 selectable functions. Two form 'C' 230VAC/2A rated dry contact relay outputs shall be provided.

Z. Floating point control interface shall be provided to increase/decrease frequency in response to external switch closures.

AA. The VFD shall accept a N.C. motor temperature over-temperature switch input, as well as possess the capability to accept a motor thermistor input.

BB. The VFD shall store in memory the last 10 faults with time stamp and recorded data.

CC. Run permissive circuit shall be provided to accept a "system ready" signal to ensure that the VFD does not start until isolation valves, seal water pumps or other types of auxiliary equipment are in the proper state for VFD operation. The run permissive circuit shall also be capable of sending an output signal as a start command to actuate external equipment before allowing the VFD to start.

DD. The VFD shall be equipped with a standard RS-485 serial communications port and front-of-drive accessible USB port. Danfoss FC or ModBus RTU communications shall be integrally mounted.

EE. A window® compatible software program to display all monitoring, fault, alarm, and status signals shall be available. This software program shall allow parameter changes, storage of all VFD operating and setup parameters, and remote operation of the VFD.

2.6 ADJUSTMENTS

A. The VFD shall have an adjustable output switching frequency.

B. Four complete programming parameter setups shall be provided, which can be locally selected through the keypad or remotely selected via digital input(s), allowing the VFD to be programmed for up to four alternate control scenarios without requiring parameter changes.

C. In each programming set up, independent acceleration and deceleration ramps shall be provided. Acceleration and deceleration time shall be adjustable over the range from 0 to 3,600 seconds to base speed.

D. The VFD shall have four programmable “Bypass frequencies” with adjustable bandwidths to prevent the driven equipment from running at a mechanically resonant frequency. The feature shall offer a Semi-Automatic program to simplify the set-up.

E. VFD shall include an automatic acceleration and deceleration ramp-time function to prevent nuisance tripping and simplify start-up.

F. In each programming setup, independent current limit settings, programmable between 50% and 110% of the drives output current rating, shall be provided.

G. PID parameter settings shall be adjustable while the VFD is operating, to aid in tuning the control loop at start up. The VFD will also be capable of simultaneously displaying set-point reference and feedback values with appropriate engineering units, as well as output frequency, output current, and run status while programming the PID function.

H. The VFD will include a “loss of follower” function to detect the loss of process feedback or reference signals with a live-zero value and a user-selectable choice of responses (go to set speed), min speed, max speed, stop, stop, and trip).

I. A Sleep Mode function shall be provided to reduce wear and heating of the pump and other equipment in periods where system demand is minimal. This function will operate in both open and closed loop modes:

   i. In closed loop process control, when the output speed drops to a user-programmed minimum value (“sleep frequency”) for a specified time (“sleep mode timer”), the drive will enter a sleep mode and either go into standby, or boost mode before entering standby. The drive shall automatically restart the motor once the output of the PID processor exceeds a programmable value “wake up frequency”.

      a. Boost mode shall prevent short-cycling of the motor by temporarily adjusting the set-point by a user-programmable percentage. Upon reaching this value, the unit will go into standby.

   ii. In open loop, the drive shall be capable of entering sleep mode if the input reference drops below a user-programmable value. When the input reference increases above a user-programmable reference, the drive will automatically start.

J. An integral motor alternation function shall be provided to enable the output of the drive to alternate between two motors. The alternation interval shall be user-programmable in hours. This function shall operate external relays as required to control the motor alteration sequence. A dwell time shall be integral to the function and can prevent damage to the motor contactors.

K. The VFD will include a user-selectable Reset function, which enables the selection of between zero and twenty restart attempts after any self-clearing fault condition

(under-voltage, over-voltage, current limit, inverter overload, and motor overload), or the selection of an infinite number of restart attempts. The time between restart attempts shall be adjustable from 0 through 600 seconds.

L. An automatic “on-delay” function may be selected from 0 to 120 seconds.

M. The VFD will include a user-selectable Auto-Restart function that enables the VFD to power up in a running condition after a power loss, to prevent the need to manually reset and restart the VFD.

N. VFD shall catch a rotating motor operating either in forward or reverse at up to full speed.

2.7 OPTIONS

A. Where required, other options such as bypass, soft-start bypass, motor selection contactors, etc. shall be available as part of the package. Softstarters, if used, shall be fully digital, closed-loop (current ramp), with bypass capability, and be the Danfoss MCD Series.

B. Provide a manual bypass consisting of a door interlocked main fused-disconnect padlockable in the off position, a built-in motor starter and a four position DRIVE/OFF/BYPASS/TEST switch controlling three contactors. In the DRIVE position, the motor is operated at an adjustable speed from the drive. In the OFF position, the motor and drive are disconnected. In the BYPASS position, the motor is operated at full speed from the AC power line and power is disconnected from the drive so that service can be performed. In BYPASS Position, a Danfoss MCD Softstarter will be in the circuit to allow the motor to avoid an across the line start. In the TEST position, the motor is operated at full speed from the AC line power. This allows the drive to be given an operational test while continuing to run the motor at full speed in bypass. Customer supplied normally closed dry contact shall be interlocked with the drives safety trip circuitry to stop the motor whether in DRIVE or BYPASS mode in case of an external safety fault.

C. VFD and all required options will be incorporated by the VFD manufacturer into an integrated package, with a single input feed and main disconnect. Semi-conductor rated fuses shall be included to provide additional equipment protection. The VFD shall be rated for 100,000 AIC when the manufacturer’s recommended fuses are used. The VFD enclosure will be available as a NEMA 1, NEMA 12, NEAM 3R, or other rating(s) as required by the specification drawings. All enclosures shall be UL Listed, and assembled by the VFD manufacturer in an ISO 9001 registered facility.

D. The VFD shall have an optional pump controller to automatically stage and de-stage up to eight (8) pumps in either standard cascade or leader follower mode, utilizing the VFD’s PID loop controller feature to regulate either pressure, level, or flow in a system. The controller shall be compatible with systems having multiple VFD’s, or with a VFD “master” and either soft starter or across-the-line follower units.

E. VFD shall offer the ability to have back-up 24 VDC power to keep control logic powered in the event of a power failure. Back-up power shall keep communications, PID Loops, and drive logic operational until power is restored.

F. The VFD shall offer a relay option board that includes three additional Form 'C' 240V relays that are mounted inside the drive.

G. Printed Circuit boards shall be conformal coated to reduce the corrosion effect from environmental gases and other conditions. The conformal coating must meet IEC 61721-3-3, Class 3C2 as standard and the VFD shall have an optional 61721-3-3, Class 3C3 coating available.

H. The VFD shall offer an I/O board as an option that adds 3-digital inputs, 2 digital outputs, 2-analog inputs, and 1-analog output.

2.8 SERVICE CONDITIONS

A. The ambient operating temperature of the VFD shall be -10°C to 50°C (14 to 122°F), with a 24-hour average not to exceed 45°C. Storage temperatures shall be -13° F (-25° C) to 149/158°F (65/70° C).

B. 0 to 95% relative humidity, non-condensing.

C. Elevation to 3,300 feet (1000 meters) without derating.

D. VFD's shall be rated for line voltage of 525 to 690VAC, 380 to 480VAC, or 200 to 240VAC; with +10% to -10% variations. Line frequency variation of ±2% shall be acceptable.

E. No side clearance shall be required for cooling of the units.

PART 3 – EXECUTION

3.1 SUBMITTALS

A. Submit manufacturer's performance data including dimensional drawings, power circuit diagrams, installation and maintenance manuals, warranty description, VFD's FLA rating, certification agency file numbers, catalog information and catalog cut-sheets for all major components.

B. All drawings shall be in an 8.5 X 11" reproducible format, and incorporate the manufacturer's title block on the drawing.

C. This specification lists the minimum VFD performance requirements for this project. Each supplier shall list any exceptions to the specification. If no departures from the specification are identified, the supplier shall be bound by the specification.

D. Three copies of all submittals shall be provided.

E. Submit a computer generated Harmonic Distortion Analysis for the jobsite location.

3.2 QUALITY ASSURANCE

A. The manufacturer shall be both ISO-9001 and ISO 14001 certified.

B. All products shall be CE marked; UL labeled, and meet the requirements of UL-508C and maintain ULc.

C. To ensure quality and minimize infant-mortality failures on the jobsite, each VFD shall be completely tested by the manufacturer. The VFD shall operate a dynamometer at full load and speed under elevated temperature conditions.

D. All optional features shall be functionally tested at the factory for proper operation.

E. Factory test documentation shall be available upon request.

3.3 EXAMINATION

A. Contractor to verify that jobsite conditions for installation meet factory recommended and code-required conditions for VFD installation prior to start-up, including clearance spacing, temperature, contamination, dust, and moisture of the environment. Separate EMT conduit installation of the motor wiring, power wiring, and control wiring, and installation per the manufacturer's recommendations shall be verified.

B. The VFD is to be covered and protected from installation dust and contamination until the environment is cleaned and ready for operation. The VFD shall not be operated while the unit is covered.

3.4 START-UP AND WARRANTY

A. A factory-authorized service technician shall perform start-up on each drive. ("Start-up" shall not include installation or termination of either power or control wiring.) The service technician shall perform start-up on up to 8 drives per day. Start-up costs provided with the bid shall include time and travel for the estimated number of visits required, but shall not be less than at least one half-day with travel. Additional labor or return trips to the site shall be billed at Danfoss' published straight-time rates. Upon completion, a start-up service report shall be provided.

B. A 6-year Onsite Drive ProTection factory warranty shall be provided such that the owner is not responsible for any warranty costs including travel, labor, parts, or other costs for a full 6 years from the date of manufacture of the Drive. Special one-off and depot warranty is not allowed. Warranty shall cover line anomalies including electrical issues, load anomalies, accidental exposure to elements or other acts of nature. The cost of the warranty shall be included in the bid along with documentation of the warranty program.

END SECTION

SECTION 16510 – INTERIOR LIGHTING

PART 1 – GENERAL

1.1 RELATED WORK SPECIFIED IN OTHER SECTIONS

A. Section 16000, "General Requirements for Electrical Work," applies to this section, with the additions and modifications specified herein. Materials not considered to be lighting equipment or lighting fixture accessories are specified in Section 16110, "Raceways, Fittings, and Supports" and Section 16120, "Conductors, Wire, and Cable." Lighting fixtures and accessories mounted on exterior surfaces of building are specified in this section.

1.2 REFERENCE SPECIFICATIONS

A. The publications listed below form a part of this specification to the extent referenced. The publications are referred to in the text by the basic designation only.

ILLUMINATING ENGINEERING SOCIETY (IES)

IESNA HB-9	(2000; Errata 2004; Errata 2005) IES Lighting Handbook

NATIONAL FIRE PROTECTION ASSOCIATION (NFPA)

NFPA 70	(2007) National Electrical Code – 2008 Edition
NFPA 101	(2005; Errata 2006; TIA 2006; TIA 2006) Life Safety Code, 2006 Edition

UNDERWRITERS LABORATORIES, INC. (UL)

UL 844	(2006; Rev thru Jul 2006) Standard for Electric Lighting Fixtures for Use in Hazardous (Classified Locations)

1.3 SUBMITTALS

A. Submit the following. Data, drawings, and reports shall employ the terminology, classifications, and methods prescribed by the IESNA HB 9, as applicable, for the lighting system specified.

B. Manufacturer's Catalog Data:

i. Lighting fixtures

ii. Lamps

iii. Ballasts

iv. Photocell switch

PART 2 – PRODUCTS

2.1 FLUORESCENT LIGHTING FIXTURES

A. Fluorescent Lamps: Provide the number, type, and wattage indicated. Energy-saving, T-8, rapid or instant-start lamps shall be rated 32 watts, 2850 approximate initial lumens, 20,000 hours average rated life. Compact fluorescent lamps shall be as rated in the drawings.

   Average rated life is based on 3 hours operating per start.

B. Electronic Ballasts: Ballasts shall be UL listed, fully solid state, electronic, high frequency type with models suitable for 1, 2, 3, or 4 lamps. The ballasts shall have less than 20% total harmonic distortion (THD) and minimum 0.9 ballast factor. Ballasts shall be manufactured by Magnetek, Motorola or an approved equivalent and shall have a 5 year warranty.

2.2 SUSPENDED FIXTURES

A. Provide hangers capable of supporting twice the combined weight of the fixtures supported by the hangers. Provide with swivel hangers to ensure a plumb installation. Hangers shall be zinc-plated steel with a swivel-ball tapped for the conduit size indicated. Hangers shall allow fixtures to swing within an angle of 20 degrees. Brace pendants 4 feet or longer to limit swinging. Single-unit suspended fluorescent fixtures shall have a tubing or stem for wiring at one point and a tubing or rod suspension provided for each unit length of chassis, including one at each end. Rods shall be a minimum 3/16-inch diameter.

2.3 COMBINATION PHOTOCELL AND MOTION DETECTOR SWITCH

A. Provide combination photocell and motion detection switch as described on the drawings.

PART 3 – EXECUTION

3.1 INSTALLATION

A. Set lighting fixtures plumb, square, and level with ceiling and walls, in alignment with adjacent lighting fixtures, and secure in accordance with manufacturers' directions and approved drawings. The installation shall meet with the requirements of NFPA 70. Mounting heights specified or indicated shall be to bottom of fixture for ceiling-mounted fixtures and to center of fixture for wall- mounted fixtures.

   Obtain approval of the exact mounting for lighting fixtures on the job before installation is commenced and, where applicable, after coordinating with the type, style, and pattern of the ceiling being installed.

B. All lighting fixtures shall be positively attached to the suspended ceiling system. The attachment device shall have a capacity of 100 percent of the lighting fixture weight acting in any direction.

C. When heavy-duty ceiling systems are used, supplemental hangers are not required if a 48-inch (1219 mm) modular hanger pattern is followed. When cross runners are used without supplemental hangers to support lighting fixtures, these cross runners shall provide the same carrying capacity as the main runner.

Lighting fixtures weighing less than 56 pounds (25.4 kg) shall have, in addition to the requirements outlined above, two No. 12 gage (2.7 mm) hangers connected from the fixture housing to the structure above. These wires may be slack.

Lighting fixtures weighing 56 pounds (25.4 kg) or more shall be supported directly from the structure above by approved hangers.

Pendant-hung lighting fixtures shall be supported directly from the structure above with No. 9 gage (3.8 mm) wire or approved alternate support without using the ceiling suspension system for direct support.

Where fixtures of sizes less than the ceiling grid are indicated to be centered in the acoustical panel, support such fixtures independently. Do not support fixtures by ceiling acoustical panels.

Provide wires or rods for lighting fixture support as specified in this section. All lighting fixture supports shall comply with UBC Section 25.213.

3.2 FIELD QUALITY CONTROL

A. Upon completion of the installation, conduct an operating test to show that the equipment operates in accordance with the requirements of this Section.

END SECTION

SECTION 16975 – SUPERVISORY CONTROL AND DATA ACQUISITION (SCADA) AND PROGRAMMABLE LOGIC CONTROLS (PLC)

PART 1 – GENERAL

1.1 WORK INCLUDED

This section covers the work necessary for the complete Programmable Logic Controls (PLC) installation including but not limited to the following:

A. Furnish SCADA System Remote Terminal Unit (RTU) including radio and antenna.

B. Furnish PLC including termination block and interface relays.

C. Install antenna pole.

D. Provide conduits, wiring and termination of field devices. Terminations within SCADA/PLC cabinet shall be by the Department of Water Supply (DWS).

1.2 RELATED WORK SPECIFIED IN OTHER SECTIONS

A. The work in this section shall, in addition to the requirements of this section be installed in accordance with Section 16000 “General Requirements for Electrical Work” and Section 16120 “Conductors, Wire, and Cable.”

1.3 QUALITY ASSURANCE

A. Comply with the latest applicable rules, regulations, requirements, and specifications of the following:

i. Local Laws and Ordinances
ii. State and Federal laws
iii. National Electrical Code
iv. County of Maui Electrical Code
v. State Fire Marshal
vi. Underwriter’s Laboratory
vii. National Electrical Safety Code
viii. Federal Communications Commission

Any conflicts that may exist between the above items will be resolved by the Contractor. Wherever the requirements of the Specifications or Drawings exceed those of the items above, the requirements of the Specifications or Drawings shall govern.

1.4 SUBMITTALS

A. Departures from Drawings: Submit to Department of Water Supply, in writing for review, details of any necessary proposed departures from these Contract

Documents, and the reasons therefore within the bidding period. Make no such departures without the prior written approval of Department of Water Supply.

B. Post-Contract Award Equipment and Material Submittals: Within 30 days after the award of the Contract, provide manufacturer's complete descriptive information for the items of material, equipment, and systems listed hereinafter. Submit all data at one time in ring binder. Comply with the requirements of Section 01330, "Submittal Procedures" and the General Conditions.

i. Provide shop drawings, literature, and requested samples showing item proposed for use, size, dimensions, capacity, special features required, equipment schedules, rough-in, etc., as required by Department of Water Supply for complete check and for installation. Use NEMA device designations and symbols for all electric circuit diagrams submitted.

ii. The Contractor shall check submittals for number of copies, adequate identification, correctness, and compliance with Drawings and Specifications, and initial all copies. Revise, change, and/or resubmit all submittal information until acceptable to the Department of Water Supply. Obtain Department of Water Supply's acceptance, and respective utility company approvals, before commencement of fabrication or installation of any materials or equipment.

iii. Review of submittal information by the Department of Water Supply shall not relieve the Contractor from responsibility for deviations from Drawings and Specifications, unless he has in writing at time of submission requested and received written approval from the Department of Water Supply for specific deviations. Review of submittal information shall not relieve the Contractor from responsibility for errors and omissions in shop drawings or literature.

iv. Furnish submittal information on the following items:

a. Catalog cuts and descriptive documents including drawings to completely describe the SCADA, RTU, PLC, radio transmitter and related components.

b. Provide block diagrams that depict overall system operation.

c. Provide elementary wiring diagrams showing all controls and instrumentation related to the pumps.

d. Software tools/programs for writing/changing programs.

e. Provide point to point wiring diagram for all wiring to and from instrumentation, SCADA, RTU, radio transmitter-receiver, PLC, control relays, pump and chlorination system controls.

f. Provide copies of all software programming.

C. Instruction Books: Comply with Section 01330, “Submittal Procedures”. Provide six sets of hard-backed ring binders containing:

i. Operation, maintenance, and renewal parts information for all equipment furnished under this section.

ii. Set of complete as-approved information herein required to be submitted for review following contract award.

iii. List of all equipment suppliers or current names, addresses, and telephone numbers of those who should be contacted for service, information, and assistance.

PART 2 – PRODUCTS

2.1 GENERAL

A. Unless otherwise indicated, provide all first quality, new materials, free from all defects, in first class condition, and suitable for the space provided. Provide materials approved by UL wherever standards have been established by that agency. Where two or more units of the same class of material or equipment are required, provide products of a single manufacturer. Component parts of materials or equipment need not be products of the same manufacturer.

2.2 STANDARD PRODUCTS

A. Unless otherwise indicated, provide materials and equipment which are the standard products of manufacturers regularly engaged in the production of such materials and equipment. Provide the manufacture’s latest standard design which conforms to these specifications.

2.3 EQUIPMENT FINISH

A. Electrical equipment may be installed with manufacturer’s standard finish and color, except where specific color, finish, or choice is indicated. If the manufacturer has no standard color, equipment shall be painted ANSI G1, Light Gray.

2.4 PROGRAMMABLE LOGIC CONTROLLER (PLC)

A. Programmable Logic Controller (PLC) shall be Allen Bradley Compact Logix System. No other PLC will be acceptable. Provide for the number of digital and analog inputs and outputs indicated on the drawings including 25% spares for future additions. PLC shall include battery backup for maintain programming and data in case of commercial power failure. Provide the required power supply for the PLC including surge arrestors and filters to protect the equipment from noise and transients. All inputs and outputs shall be fused.

Ethernet Processor Unit: Compact Logix 1769-L32E; Input Modules: 1769-IA16; Output Modules: 1769-OB16; Interface Relays: 700-HAX2Z24 24VDC.

2.5 SCADA RTU

A. SCADA System RTU shall be as manufactured by Advanced Telemetry Systems International, Inc. (ATSI) Model 91200 CP-12. Provide RTU with Ethernet and serial communication ports, processor, power supply, slot backplane, digital and analog input modules, digital and analog output modules in the configuration indicated on the drawings and required to perform the functions indicated. RTU shall include a radio modem, back-up 10 AH battery, RF lightning arrestor, AC power, DC Back-up power and I/O wired to terminal blocks. Unit shall be mounted in a 20”x20”x8”D NEMA 1 enclosure. Provide a minimum of three mixed I/O configuration must match what is shown on the drawings because standard software will be used by the Department of Water Supply.

2.6 RADIO TRANSMITTER-RECEIVER

A. Radio transmitter-receiver and directional antenna shall be provided to operate with the Department of Water Supply’s radio telemetry/SCADA System. New equipment shall be fully compatible with existing equipment and shall include power supply, battery back up and surge arrestor. Provide directional antenna and cable to suit the equipment.

i. Antenna: Kathrein SCALA Model CA-7-460 12 dBi and RFS-201-7N gain antenna 450-470 MHz with stainless steel mounting hardware.

ii. Antenna Cable: Andrew Harline LD-50A, ½” with Andrews type N connectors, with weatherproofing kits.

iii. Radio: Teledesign Model TS4000A05E45SBR radio modem with remote diagnostics option and heat sink.

PART 3 – EXECUTION

3.1 GENERAL

A. Work shall be performed in a workmanlike manner by craftsmen skilled in the particular trade. As a minimum, workmanship shall conform to the latest edition of the American Electrician’s Handbook by Croft. All work shall present a neat and finished appearance.

3.2 MATERIAL AND EQUIPMENT INSTALLATION

A. All cabinets and panels shall be installed by contractor. Follow manufacture’s installation instructions explicitly (unless otherwise indicated), at no additional cost to the Department. Wherever any conflict arises between manufacturer’s instructions, codes and regulations, and these Contract Documents they shall be referred to Department for resolution. Keep copy of manufacturer’s installation instructions on the job site available for review at all times.

3.3 PROGRAMMABLE LOGIC CONTROLLER (PLC)

A. Provide Programmable Logic Controller (PLC) for installation within the PLC cabinet. Provide terminal boards for termination of all inputs and outputs. Identify each cable pair or conductor with a permanent label that is correlated to the wiring diagrams. Department of Water Supply (DWS) to terminate.

   Terminal blocks with fuse blow indicators: 1492 H4 100-300VAC, 1492 H5 10-57VAC/DC.

B. The PLC will be programmed according to the logic diagram by Department of Water Supply. Make program adjustments for proper operation of the pumps. Contractor to provide interfacing (external to PLC cabinet) with the pump starters and related equipment and controls, including relays, wiring and switches. Coordinate all requirements and work with Department of Water Supply. Provide all programming software and data to the Department of Water Supply in a usable format that can be used by Department of Water Supply personnel to make future software modifications.

C. Provide digital outputs including dry contacts rated to suit the use indicated; provide interfacing relays must have to provide the necessary switching capacity. Where indicated, provide 24 VDC digital output of the ratings required for operation of the equipment.

   All input/outputs to be fused and surge protected.

D. Wiring for analog signals shall be shielded conductors with configuration and design as recommended by the PLC manufacturer; conductors shall be copper stranded. Wiring for digital signals shall consist of conductors with configuration and design as recommended by the PLC manufacturer; conductors shall be stranded copper.

3.4 SCADA SYSTEM RTU

A. Install the ATSI RTU equipment enclosure in the PLC/SCADA cabinet. Install the antenna mast/pole as shown. Test and adjust the RTU and radio telemetry system in concert with the Department of Water Supply and render assistance required to place the system into satisfactory operation.

3.5 TESTING AND ADJUSTMENT

A. Coordinate with Department of Water Supply for testing of SCADA and PLC in conjunction with the pump and system testing with assistance of the manufacturer's representatives.

   Testing shall include SCADA and PLC and all related pump and peripheral system controls to demonstrate that all components, systems, and subsystems operate satisfactorily and as intended and described by the contract documents. Acceptance tests shall be scheduled in advance and shall be conducted with the Department of Water Supply. Each functions shall be tested at least three times to demonstrate proper operation. Make all adjustments to the sensors and

controls to provide for successful and satisfactory operation related to timing and sequencing until the system operates according to the requirements in the contract.

END SECTION

GEOTECHNICAL ENGINEERING EXPLORATION

DHHL PULEHUNUI WASTEWATER SYSTEM

PULEHUNUI, MAUI, HAWAII

W.O. 7932-00 NOVEMBER 25, 2019

Prepared for

AUSTIN, TSUTSUMI & ASSOCIATES, INC.

GEOLABS, INC.
Geotechnical Engineering and Drilling Services

GEOTECHNICAL ENGINEERING EXPLORATION
DHHL PULEHUNUI WASTEWATER SYSTEM
PULEHUNUI, MAUI, HAWAII

W.O. 7932-00 NOVEMBER 25, 2019

Prepared for

AUSTIN, TSUTSUMI & ASSOCIATES, INC.

GERALD Y. SEKI
LICENSED PROFESSIONAL ENGINEER
No. 5635-C
HAWAII, U.S.A.

THIS WORK WAS PREPARED BY
ME OR UNDER MY SUPERVISION.

SIGNATURE

4-30-20
EXPIRATION DATE
OF THE LICENSE

GEOLABS, INC.
Geotechnical Engineering and Drilling Services
2006 Kalihi Street • Honolulu, HI 96819

Hawaii • California

GEOLABS, INC.

Geotechnical Engineering and Drilling Services

November 25, 2019
W.O. 7932-00

Ms. Adrienne Wong
Austin, Tsutsumi & Associates, Inc.
1871 Wili Pa Loop, Suite A
Wailuku, HI 96793

Dear **Ms. Wong:**

Geolabs, Inc. is pleased to submit our report entitled "Geotechnical Engineering Exploration, DHHL Pulehunui Wastewater System, Pulehunui, Maui, Hawaii," prepared in support of the design of the project.

Our work was performed in general accordance with the scope of services outlined in our revised fee proposal dated June 24, 2019.

Please note that the soil and rock samples recovered during our field exploration (remaining after testing) will be stored for a period of two months from the date of this report. The samples will be discarded after that date unless arrangements are made for a longer sample storage period. Please contact our office for alternative sample storage requirements, if appropriate.

Detailed discussion and specific recommendations for the design of the project are contained in the body of this report. If there is any point that is not clear, please contact our office.

Very truly yours,

GEOLABS, INC.

Gerald Y. Seki, P.E.
Vice President

GS:NK:as

2006 Kalihi Street • Honolulu, Hawaii 96819
Phone: (808) 841-5064 • Facsimile: (808) 847-1749 • E-mail: hawaii@geolabs.net

Hawaii • California

GEOTECHNICAL ENGINEERING EXPLORATION

DHHL PULEHUNUI WASTEWATER SYSTEM

PULEHUNUI, MAUI, HAWAII

W.O. 7932-00 NOVEMBER 25, 2019

TABLE OF CONTENTS

Page

SUMMARY OF FINDINGS AND RECOMMENDATIONS iii

1. GENERAL 1
- 1.1 Introduction 1
- 1.2 Project Considerations 1
- 1.3 Purpose and Scope 3

2. SITE CHARACTERIZATION 5
- 2.1 Regional Geology 5
- 2.2 Site Description 6
- 2.3 Subsurface Conditions 7
- 2.4 Seismic Design Parameters 8
  - 2.4.1 Earthquakes and Seismicity 8
  - 2.4.2 Liquefaction Potential 9
  - 2.4.3 Soil Profile Type for Seismic Design 10

3. DISCUSSION AND RECOMMENDATIONS 12
- 3.1 Building Foundations 13
- 3.2 Slabs-On-Grade 14
- 3.3 Excavation 16
  - 3.3.1 Excavation Method 17
  - 3.3.2 Construction Support 18
- 3.4 Dewatering 20
  - 3.4.1 Dewatering Considerations 21
  - 3.4.2 Dewatering Precaution and Monitoring 22
- 3.5 Retaining Structures 23
- 3.6 Pump Station Foundation 25
- 3.7 Sewer Manhole Structures 26
- 3.8 Installation of New Sewer Lines 26
- 3.9 Open-Cut Trenching Installation Method 27
- 3.10 Pilot Tube Microtunneling 28
  - 3.10.1 Anticipated Tunneling Conditions 29
  - 3.10.2 Potential Tunneling Difficulties 29
  - 3.10.3 Cobbles and Boulders 30
  - 3.10.4 Mixed-Face Conditions 30
  - 3.10.5 Jacking and Receiving Pits 31
  - 3.10.6 Excavation Method 31
  - 3.10.7 Thrust Block Resistance 32
  - 3.10.8 Other Considerations 32

Page

3.11 Horizontal Directional Drilling Method 33
3.11.1 HDD Geotechnical Considerations 34
3.11.2 Pipe Size and Material 35
3.11.3 Construction Staging Areas 37
3.11.4 Construction Considerations 38
3.11.5 Type of Drilling Fluid 39
3.11.6 Muck and Slurry Disposal 39
3.11.7 Installation Considerations 40
3.11.8 Service Life Considerations 41
3.12 Horizontal Directional Drilling Method – Preliminary Design Analyses 42
3.12.1 Drilling Fluid Pressure versus Hydraulic Fracture Pressure 43
3.13 Field Infiltration Testing 43
3.14 Site Grading 45
3.14.1 Site Preparation 45
3.14.2 Fills and Backfills 46
3.14.3 Fill Placement and Compaction Requirements 46
3.14.4 Cut and Fill Slopes 47
3.15 Pavement Design 47
3.16 Design Review 48
3.17 Post-Design Services/Services During Construction 49

4. LIMITATIONS 50

CLOSURE 52

PLATES
Project Location Map ..... Plate 1
Site Plans ..... Plates 2.1 thru 2.6
HDD Crossing Plan & Profiles ..... Plates 3.1 and 3.2
PTMT Crossing Plan & Profiles ..... Plates 3.3 and 3.4

APPENDIX A
Field Exploration ..... Pages A-1 and A-2
Soil Log Legend ..... Plate A-0.1
Soil Classification Log Key ..... Plate A-0.2
Rock Log Legend ..... Plate A-0.3
Logs of Borings ..... Plates A-1 thru A-41.2

APPENDIX B
Laboratory Tests ..... Page B-1
Laboratory Test Data ..... Plates B-1 thru B-26

APPENDIX C
Photographs of Core Samples ..... Plates C-1 thru C-20

APPENDIX D
Infiltration Test Records ..... Plates D-1 thru D-6

SUMMARY OF FINDINGS AND RECOMMENDATIONS

Our field exploration generally encountered alluvial soils about 5 to 25.5 feet deep overlying basalt rock formation extending to the maximum depth explored of approximately 53 feet below the existing ground surface. The alluvial deposit generally consisted of: soft to hard sandy/clayey silt with gravel, cobbles, and boulders; hard silty clay; dense to very dense sandy gravel and gravel with cobbles and boulders; and loose to dense silty sand. The basalt rock formation was soft to very hard.

Groundwater was encountered in two of our borings at about 20 and 30 feet below the existing ground surface. It should be noted that due to the basalt formation encountered, rotary rock coring techniques utilizing drilling water was required to advance most of the drilled borings. Therefore, accurate in-situ groundwater readings could not be taken in some of our borings due to the time it took for the drilling water to dissipate.

Based on the generally stiff/dense subsurface conditions, we recommend using shallow spread and/or continuous footings to support the new structures planned for the project. An allowable bearing pressure of up to 3,000 psf may be utilized for the design of shallow foundations bearing on the recompacted on-site soils and/or new compacted fills needed to achieve the design finished grades.

It is anticipated that the invert of the new gravity sewer line and sewer force mains will be located at depths of about 6 to 15 feet below the existing ground surface. We understand that most of the new sewer utilities will be installed using conventional open-cut trenching (cut-and-cover) methods. However, we understand that trenchless utility installation methods will be required for four separate crossings. Therefore, we recommend utilizing pilot tube microtunneling and horizontal directional drilling for the trenchless installation of the planned gravity and force main lines, respectively.

In order to install the proposed utility lines, manholes, pump station structures, and underground storage tanks, we anticipate that excavations below the existing ground surface will be required for the project construction. Based on the planned gravity sewer line inverts and bottom of below-grade structure elevations, we envision that temporary shoring of the excavations will be required for the project. In addition, we envision dewatering will be required in the deeper excavations at some locations. Therefore, dewatering provisions will need to be included in the contract documents for the proposed construction.

The text of this report should be referred to for detailed discussions and specific recommendations for design of the project.

END OF SUMMARY OF FINDINGS AND RECOMMENDATIONS

SECTION 1. GENERAL

1.1 Introduction

This report presents the results of our geotechnical engineering exploration performed for the proposed Department of Hawaiian Home Lands (DHHL) Wastewater System project in Pulehunui on the Island of Maui, Hawaii. The project location and general vicinity are shown on the Project Location Map, Plate 1.

This report summarizes the findings and geotechnical recommendations resulting from our field exploration, laboratory testing, and engineering analysis for the project. The recommendations presented herein are intended for the design of the building structures, utilities, below grade structures, earthwork, and pavement only. The findings and recommendations presented herein are subject to the limitations noted at the end of this report.

1.2 Project Considerations

The DHHL Pulehunui Wastewater System project is located on both sides of Maui Veterans Highway and north of the intersection with Piilani Highway and North Kihei Road on the Island of Maui, Hawaii. We understand that the project previously consisted of seven packages. However, based on the newest set of project plans, we understand that the approximately 6,600-foot long gravity sewer line adjacent to Mehameha Loop connecting wastewater from DHHL North to the new DHHL North Pump Station was removed from the scope of this project. Based on the information provided, descriptions of the six packages (Packages A through F) are presented below.

- **Package A** consists of the new DHHL North Pump Station (with a bottom slab elevation of +6.5 feet Mean Sea Level [MSL]) at the south end of DHHL North that will intercept the gravity sewer line from Package B. In addition, two trenchless utility crossings are planned to connect the DHHL North Pump Station to the new gravity sewer line (Package B) and the new 10-inch diameter sewer force main (Package C).

- **Package B** consists of an approximately 5,000-foot long, 12-inch diameter gravity sewer line (with invert depths up to about 15 feet below the existing ground surface) connecting DLNR, PSD, and Maui Raceway Park wastewater lines to the new DHHL North Pump Station. In addition, we understand that one trenchless crossing for the gravity sewer line (approximately 250 feet in length) is planned to cross under an existing bomb shelter adjacent to Maui Veterans Highway.

- **Package C** consists of two sewer force mains: an approximately 6,600-foot long, 10-inch diameter sewer force main from the DHHL North Pump Station to a new temporary wastewater treatment plant (WWTP) (Package E), and an approximately 3,000-foot long, 4-inch diameter sewer force main from the DHHL South Pump Station (Package D) to the new temporary WWTP. The depths of the new force mains range from about 6 to 10 feet below the existing ground surface. In addition, we understand that one trenchless crossing for the 10-inch diameter force main (about 390 feet in length) is planned near the DHHL South Pump Station.

- **Package D** consists of the new DHHL South Pump Station (with a bottom slab elevation of -12.5 feet MSL) at the makai side of DHHL South. In addition, an approximately 800-foot long, 4-inch diameter force main connects the DHHL South Pump Station to the 4-inch diameter force main in Package C.

- **Package E** encompasses a new temporary WWTP consisting of two soil aquifer treatment basins, a pump station (with an invert depth of about 22 feet below the existing ground surface), a below-grade storage tank (with an invert depth of about 16 feet below the existing ground surface), and slab-on-grade pads supporting equipment and above-grade storage tanks.

- **Package F** encompasses a permanent WWTP consisting of two soil aquifer treatment basins, a pump station (with an invert depth of about

22 feet below the existing ground surface), a below-grade storage tank (with an invert depth of about 16 feet below the existing ground surface), and slab-on-grade pads supporting equipment and above-grade storage tanks.

Based on the provided grading plans, we understand that general site grading for the wastewater system project will include cuts and fills on the order of about 7 and 10 feet, respectively. In addition, we understand that deeper excavations (about 15 to 30 feet below the existing ground surface) will be required to install the planned utility lines and below-grade structures.

1.3 Purpose and Scope

The purpose of our geotechnical engineering exploration was to obtain an overview of the surface and subsurface conditions to develop an idealized soil/rock data set to formulate geotechnical engineering recommendations for the design of the DHHL Pulehunui Wastewater System project. The work was performed in general accordance with the scope of services outlined in our revised fee proposal dated June 24, 2019. The scope of work for this exploration included the following tasks and work efforts:

1. Research and review of available in-house geological information, available subsurface information in the project vicinity, and the project drawings.

2. Filing of permit applications related to our field exploration program to the County of Maui and the State of Hawaii – Department of Transportation, Highways Division.

3. Coordinate staking of borehole locations and verify presence and locations of underground utilities.

4. Mobilization and demobilization of mechanized trail clearing equipment and operator.

5. Trail clearing with mechanized trail clearing equipment to provide access to the boring locations.

6. Traffic control at the proposed boring locations during our field exploration program.

7. Mobilization/demobilization of a truck-mounted drill rig, water truck, and two operators to and from the project site from Honolulu.

8. Drilling and sampling of 41 boreholes to depths of about 10 to 53 feet below existing ground surface.

9. Performance of six infiltration tests to evaluate the infiltration characteristics of the subsurface materials by our geologists.

10. Coordination of the trail clearing, field exploration, and logging of the borings by our geologists.

11. Laboratory testing of selected samples obtained during the field exploration as an aid in classifying the materials and evaluating their engineering properties.

12. Engineering analyses of the field and laboratory data to formulate geotechnical engineering recommendations pertaining to the design of the project.

13. Preparation of this report summarizing our work on the project and presenting our findings and recommendations.

14. Coordination of our overall work on the project by our senior engineer.

15. Quality assurance of our work and client/design team consultation by our principal engineer.

16. Miscellaneous work efforts such as drafting, word processing, and clerical support.

Detailed descriptions of our field exploration methodology and the Logs of Borings are presented in Appendix A. Results of the laboratory tests performed on selected soil samples are presented in Appendix B. Photographs of core samples are provided in Appendix C. Results of our field permeability tests performed in the drilled borings are presented in Appendix D.

END OF GENERAL

SECTION 2. SITE CHARACTERIZATION

2.1 Regional Geology

The Island of Maui was built by two major volcanoes, the older West Maui (Tertiary Epoch) and the more recent East Maui, also known as Haleakala (Pleistocene Epoch). The Isthmus of Maui is a narrow, gently sloping plain located between these two volcanoes. The project site is located at the central portion of this gently sloping plain.

The Isthmus of Maui was created by lava flows from Haleakala ponding on West Maui. It is comprised of alluvium washed from the slopes of West Maui and East Maui (Haleakala). The erosional processes are dominated by the detachment of soil and rock masses from the mountain walls, and the soil materials are transported downslope toward the Isthmus primarily by gravity as colluvium. Once these materials reach the stream in the central portion of a valley, alluvial processes become dominant, and the sediments are transported and deposited as alluvium.

In general, stream flows in Hawaii are intermittent and flashy, such that the stream flows transmit large volumes of water for very short duration. Because of this, the transport of sediments is intermittent, and the bulk of the stream's hydraulic load consists of a poorly-sorted mixture of boulders, cobbles, gravel, sands, and fines. When the erosional base levels change, these sediment loads are left as deposits.

When deposits are left in-place for long periods of time, chemical processes begin to alter the materials, simultaneously causing a breakdown or weathering of the materials. Chemical processes also cause induration, or cementation, of the coarse-grained portion of the sediment into a poorly-consolidated sedimentary rock or conglomerate. Simultaneously, erosion continues in the areas above the valley floors and upstream in headwaters. This continued erosion generates material, which is transported downslope covering the older alluvial soil deposits. Depending on the local base level and rate of transport, these newer sediments are generally transient in terms of geologic time. In addition, their consistency and density are generally less than those of the older, partially consolidated deposits.

Underlying the alluvial soil deposits are overlapping lava from the West Maui and East Maui volcanoes. The bulk of the Haleakala Shield was built during the late Pliocene and early Pleistocene Epoch by thinly bedded basaltic lava flows of the Honomanu Volcanic Series. During the Pleistocene Epoch, the characteristics of the lava changed to very hard, thickly bedded flows of andesitic composition. These lavas have been grouped as the Kula Volcanic Series.

Further complicating the stratigraphy of the isthmus was the development of broad fringing reefs in the bay formed at the juncture between West Maui and East Maui and glacio-eustatic sea level changes that occurred during the Pleistocene Epoch in response to the advance and retreat cycles of continental glaciation. During the glacial advances, water was bound into the glaciers and less water was available to fill the ocean basins. Consequently, global sea levels fell below the current sea level. During the glacial retreats, more water was available and sea levels rose.

When the sea levels fell, the fringing reefs, with their complement of calcium carbonate sand derived from both detrital and bioclastic sources, were exposed to the prevailing trade winds. These winds blew in about the same direction as the current trade winds but were estimated to have an average velocity of about 60 miles per hour. The trade winds transported the loose sand from the reef areas resulting in a strip of sand dunes (aeolian deposits) that extended from the present Wailuku-Kahului area to as far as the south coast of the Maui Isthmus, blanketing the volcanic and alluvial deposits on the floor of the isthmus. Sugar cane operations in the past decades have brought the project site to its present conditions.

2.2 Site Description

The project site is located on the east and west sides of Maui Veterans Highway in Pulehunui on the Island of Maui, Hawaii. The project limits are approximately bounded by Kamaaina Road to the north, Airport Village to the east, North Kihei Road to the south, and former agricultural land to the west. The approximate project location is presented on the Project Location Map, Plate 1.

In general, the proposed wastewater system improvements will be located in the existing agricultural fields on either side of Maui Veterans Highway. At the time of our field exploration, the existing ground surface was generally covered by waist-high, dry land grasses and kiawe trees. The existing ground surface was observed to be relatively flat with a gentle slope inclination trending from east to west. Based on the topographic survey plan provided, ground surface elevations within the project limits range from approximately +13 to +130 feet MSL.

2.3 Subsurface Conditions

We explored the subsurface conditions at the project site by drilling and sampling 41 borings, designated as Boring Nos. 1 through 41, extending to depths of about 10 to 53 feet below the existing ground surface. In addition, six bulk samples of the near-surface soils, designated as Bulk-1 through Bulk-6, were collected for laboratory California Bearing Ratio (CBR) tests to evaluate the pavement support characteristics of the near-surface soils. The approximate boring and bulk sample locations are shown on the Site Plans, Plates 2.1 through 2.6.

In general, our borings encountered alluvial soils about 5 to 25.5 feet thick overlying basalt rock formation extending to the maximum depth explored of approximately 53 feet below the existing ground surface. A relatively thin surface fill layer about 1 to 2 feet thick was encountered in eight of the borings. Weathered basalt rock formation was encountered in two of the borings below the alluvium. Clinker was encountered in six of the borings between and below the basalt rock formation.

The alluvial deposit generally consisted of: soft to hard sandy/clayey silt with gravel, cobbles, and boulders; hard silty clay; dense to very dense sandy gravel and gravel with cobbles and boulders; and loose to dense silty sand. The basalt rock formation was soft to very hard.

Groundwater was encountered in two of our borings at about 20 and 30 feet below the existing ground surface corresponding to elevations of about 0 and +10 feet MSL. It should be noted that due to the basalt formation encountered, rotary rock coring techniques utilizing drilling water was required to advance most of the drilled

borings. Therefore, accurate in-situ groundwater readings could not be taken in some of our borings due to the time it took for the drilling water to dissipate. In addition, it should be noted that groundwater levels can fluctuate depending on tidal fluctuations, storm surge condition, seasonal precipitation, groundwater withdrawal and/or injection, and other factors.

Detailed descriptions of our field exploration methodology and the Logs of Borings are presented in Appendix A. Descriptions and graphic representation of the material encountered in the borings are provided on the Logs of Borings in Appendix A. Results of the laboratory tests performed on selected soil samples are presented in Appendix B. Photographs of the core samples retrieved from our field exploration are presented in Appendix C. Field infiltration test results are presented in Appendix D.

2.4 Seismic Design Parameters

Based on the International Building Code (2006 Edition), the project site may be subject to seismic activity and seismic design considerations will need to be addressed. The following subsections provide discussions on the seismicity, soil profile type for seismic design, and the potential for liquefaction at the project site.

2.4.1 Earthquakes and Seismicity

In general, earthquakes throughout the world are caused by shifts in the tectonic plates. In contrast, earthquake activity in Hawaii is linked primarily to volcanic activity; therefore, earthquake activity in Hawaii generally occurs before or during volcanic eruptions. In addition, earthquakes may result from the underground movement of magma that comes close to the surface but does not erupt. The Island of Hawaii experiences thousands of earthquakes each year, but most are so small that they can only be detected by sensitive instruments. However, some of the earthquakes are strong enough to be felt, and a few cause minor to moderate damage.

In general, earthquakes associated with volcanic activity are most common on the Island of Hawaii. Earthquakes that are directly associated with the movement of magma are concentrated beneath the active Kilauea and Mauna Loa Volcanoes on

the Island of Hawaii. Because the majority of earthquakes in Hawaii (over 90 percent) are related to volcanic activity, the risk of seismic activity and degree of ground shaking diminishes with increased distance from the Island of Hawaii.

The Island of Hawaii has experienced numerous earthquakes greater than Magnitude 5 (M5+); however, earthquakes are not confined only to the Island of Hawaii. To a lesser degree, the Island of Maui has experienced several earthquakes greater than Magnitude 5. Therefore, moderate to strong earthquakes have occurred in the County of Maui.

2.4.2 Liquefaction Potential

Based on the International Building Code (2006 Edition), the project site may be subjected to seismic activity, and the potential for soil liquefaction at the project site will need to be evaluated.

Soil liquefaction is a condition where saturated cohesionless soils located near the ground surface undergo a substantial loss of strength due to the build-up of excess pore water pressures resulting from cyclic stress applications induced by earthquakes. In this process, when the loose saturated sand deposit is subjected to vibration (such as during an earthquake), the soil tends to densify and decrease in volume causing an increase in pore water pressure. If drainage is unable to occur rapidly enough to dissipate the build-up of pore water pressure, the effective stress (internal strength) of the soil is reduced. Under sustained vibrations, the pore water pressure build-up could equal the overburden pressure, essentially reducing the soil shear strength to zero and causing it to behave as a viscous fluid. During liquefaction, the soil acquires sufficient mobility to permit both horizontal and vertical movements, and if not confined, will result in significant deformations.

Soils most susceptible to liquefaction are loose, uniformly graded, fine-grained sands and loose silts with little cohesion. The major factors affecting the liquefaction characteristics of a soil deposit are as follows:

FACTORS	LIQUEFACTION SUSCEPTIBILITY
Grain Size Distribution	Fine and uniform sands and silts are more susceptible to liquefaction than coarse or well-graded sands.
Initial Relative Density	Loose sands and silts are most susceptible to liquefaction. Liquefaction potential is inversely proportional to relative density.
Magnitude and Duration of Vibration	Liquefaction potential is directly proportional to the magnitude and duration of the earthquake.

In general, the subsurface information obtained from the drilled borings indicate that the project site is underlain by relatively stiff/dense alluvium overlying soft to very hard basalt rock formation. Based on the subsurface conditions encountered in our field exploration, the potential for soil liquefaction at the project site is non-existent due to the presence of relatively stiff/dense alluvium and basalt rock formation and the absence of loose granular soils below the groundwater table within the depths explored. Therefore, the potential for liquefaction is not a design consideration at this project site.

2.4.3 Soil Profile Type for Seismic Design

Based on the subsurface materials encountered and the geologic setting of the area, we believe that the project site may be classified from a seismic analysis standpoint as being a “Very Dense Soil and Soft Rock” site corresponding to a Site Class C soil profile in accordance with the International Building Code (Table No. 1613.5.2), 2006 Edition. Based on Site Class C, the following seismic design parameters were estimated and may be used for seismic analysis of the project.

SEISMIC DESIGN PARAMETERS INTERNATIONAL BUILDING CODE 2006 EDITION	
Parameter	**Value**
Peak Bedrock Acceleration, PBA (Site Class B)	0.362g
MCE Spectral Response Acceleration, S_S	0.977g
MCE Spectral Response Acceleration, S_1	0.251g

SEISMIC DESIGN PARAMETERS INTERNATIONAL BUILDING CODE 2006 EDITION	
Parameter	**Value**
Site Class	"C"
Site Coefficient, F_a	1.009
Site Coefficient, F_v	1.549
Design Peak Ground Acceleration, PGA (Site Class "C")	0.249g
Design Spectral Response Acceleration, S_{DS}	0.657g
Design Spectral Response Acceleration, S_{D1}	0.259g

END OF SITE CHARACTERIZATION

SECTION 3. DISCUSSION AND RECOMMENDATIONS

Based on our field exploration, the project site is generally underlain by alluvial soils about 5 to 25.5 feet deep overlying basalt rock formation extending to the maximum depth explored of approximately 53 feet below the existing ground surface. A relatively thin surface fill layer about 1 to 2 feet thick was encountered in eight of the borings. Weathered basalt rock formation was encountered in two of the borings below the alluvium. Clinker was encountered in six of the borings between and below the basalt rock formation. Groundwater was encountered in two of our borings at about 20 and 30 feet below the existing ground surface. It should be noted that due to the basalt formation encountered, rotary rock coring techniques utilizing drilling water was required to advance most of the drilled borings. Therefore, accurate in-situ groundwater readings could not be taken in some of our borings due to the time it took for the drilling water to dissipate.

Based on the generally stiff/dense subsurface conditions, we recommend using shallow spread and/or continuous footings to support the new structures planned for the project. An allowable bearing pressure of up to 3,000 pounds per square foot (psf) may be utilized for the design of shallow foundations bearing on the recompacted on-site soils and/or new compacted fills needed to achieve the design finished grades. The bottom of the footing excavations should be recompacted to at least 90 percent relative compaction to provide a relatively firm and smooth bearing surface prior to the placement of reinforcing steel and/or concrete.

It is anticipated that the invert of the new gravity sewer line and sewer force mains will be located at depths of about 6 to 15 feet below the existing ground surface. We understand that most of the new sewer utilities will be installed using conventional open-cut trenching (cut-and-cover) methods. However, we understand that trenchless utility installation methods will be required for four separate crossings. Therefore, we recommend utilizing pilot tube microtunneling and horizontal directional drilling for the trenchless installation of the planned gravity and force main lines, respectively.

In order to install the proposed utility lines, manholes, pump station structures, and underground storage tanks, we anticipate that excavations below the existing

ground surface will be required for the project construction. Based on the planned gravity sewer line inverts and bottom of below-grade structure elevations, we envision that temporary shoring of the excavations will be required for the project. In addition, we envision dewatering will be required in the deeper excavations at some locations. Therefore, dewatering provisions will need to be included in the contract documents for the proposed construction.

Detailed discussion of these items and our geotechnical engineering recommendations for design are presented in the following subsections.

3.1 Building Foundations

We understand that structures required for the project will generally consist of one-story buildings, storage tanks, and equipment pads. Based on the results of our field borings, we believe that shallow spread and/or continuous footings may be used to support the structures required for the project. An allowable bearing pressure of up to 3,000 psf may be utilized for the design of shallow foundations bearing on the stiff and dense alluvial material encountered at the project site. This bearing value is for supporting dead-plus-live loads and may be increased by one-third (⅓) for transient loads, such as those caused by wind or seismic forces.

Footing subgrades should be recompacted to at least 90 percent relative compaction to provide a relatively firm and unyielding surface prior to the placement of reinforcing steel or concrete. Relative compaction refers to the in-place dry density of soil expressed as a percentage of the maximum dry density of the same soil determined in accordance with ASTM D1557. Optimum moisture is the water content (percentage by dry weight) corresponding to the maximum dry density.

Soft and/or loose materials encountered at the bottom of footing excavations should be over-excavated to expose the underlying firm materials. The over-excavation should be backfilled with select fill materials compacted to a minimum of 90 percent relative compaction.

In general, the bottom of footings should be embedded a minimum of 18 inches below the lowest adjacent finished grades. Foundations next to utility trenches should

be embedded below a one horizontal to one vertical (1H:1V) imaginary plane extending upward from the bottom edge of the utility trench, or the foundation should be extended to a depth as deep as the inverts of the utility lines. This requirement is necessary to avoid surcharging adjacent below-grade structures with additional structural loads and to reduce the potential for appreciable foundation settlement.

If foundations are designed and constructed in accordance with the recommendations presented herein, total settlement of foundations is estimated to be on the order of 1 inch with differential settlements on the order of about 0.5 inches.

Lateral loads acting on the structures may be resisted by friction between the base of the foundation and the bearing materials and by passive earth pressure developed against the near-vertical faces of the embedded portion of foundations. A coefficient of friction of 0.35 may be used for footings bearing directly on new compacted fills or re-compacted on-site soils. Resistance due to passive earth pressure may be estimated using an equivalent fluid pressure of 300 pounds per square foot per foot of depth (pcf) assuming the soils around the footings are well compacted. Unless covered by pavements or slabs, the passive pressure resistance in the upper 12 inches below the finished grade should be neglected.

A Geolabs representative should observe the footing excavations prior to the placement of reinforcing steel and concrete to confirm the foundation bearing conditions and the required embedment depths.

3.2 Slabs-On-Grade

We anticipate new concrete slabs-on-grade will be used for the proposed one-story structures, storage tanks, equipment pads, and exterior walkways. A minimum 6-inch thick capping fill layer should be provided below the slab cushion fill. The capping layer should consist of non-expansive select granular material and should be well-graded from coarse to fine with particles no larger than 3 inches in largest dimension and should contain between 10 and 30 percent particles passing the No. 200 sieve. The non-expansive select granular material should have a laboratory CBR value of 20 or more and should have a maximum swell of less than 1 percent when tested in

accordance with ASTM D1883. The select granular material should also be free of vegetation and deleterious materials.

The on-site subgrade soils should be scarified to a depth of about 8 inches, moisture conditioned to at least 2 percent above the optimum moisture, and recompacted to a minimum of 90 percent relative compaction. Where shrinkage cracks are noted after compaction of the subgrade, we recommend that the soils be thoroughly moistened to close the cracks, or the subgrades should be prepared again. Saturation and subsequent yielding of the exposed subgrade due to inclement weather and poor drainage may require over-excavation of the soft areas and replacement with well-compacted fill.

For interior building slabs (not subjected to vehicular traffic or machinery vibration), we recommend placing a minimum 4-inch thick layer of cushion fill consisting of open-graded gravel (ASTM C33, No. 67 gradation) below the slabs. The open-graded gravel cushion fill would serve as a capillary moisture break and would provide uniform support of the slabs. To reduce the potential for excessive future moisture infiltration through the slab and subsequent damage to floor coverings, an impervious moisture barrier is recommended on top of the gravel cushion fill layer. Flexible floor coverings, such as carpet or sheet vinyl, should be considered because they can better mask minor slab cracking. Interior walls should be designed to incorporate some flexibility to accommodate a small amount of possible ground movements.

Where the slabs will be subjected to vehicular traffic or machinery vibration, we recommend providing a 6-inch layer of aggregate subbase below the slabs in lieu of the 4-inch thick gravel cushion layer. The moisture barrier may be omitted for these slabs. The aggregate subbase should consist of crushed basaltic aggregates compacted to a minimum of 95 percent relative compaction.

Exterior flatwork, such as sidewalks, may be supported on a minimum 6-inch thick capping fill layer consisting of non-expansive select granular fill materials. To reduce the potential for substantial shrinkage cracks developing in the slabs, crack

control joints should be provided at intervals equal to the width of the walkways with expansion joints provided at right-angle intersections.

The thickened edges of slabs adjacent to unpaved areas should be embedded at least 12 inches below the lowest adjacent grade. It should be emphasized that the areas adjacent to the slab edges should be backfilled tightly against the edges of the slabs with relatively impervious soils. These areas should also be graded to divert water away from the slabs and to reduce the potential for water ponding around the slabs.

The slab subgrades should be kept moist prior to the final placement of concrete. Where shrinkage cracks are observed after compaction of the subgrade, we recommend thoroughly moistening the soil to close the cracks. Saturation and subsequent yielding of the exposed subgrade due to inclement weather and poor drainage may require over excavation of the soft areas and replacement with well compacted fill at no additional cost to the owner.

The area adjacent to the slabs should be backfilled tightly against the slab edges with relatively impervious soils (on-site clayey soils) and graded to divert water away from the slabs to reduce the potential for appreciable water ponding around the slab edges.

3.3 Excavation

In order to install the proposed utility lines, manholes, pump station structures, and underground storage tanks, we anticipate that excavations below the existing ground surface will be required for the project construction. Based on the planned gravity sewer line inverts and bottom of below-grade structure elevations, we envision that temporary shoring of the excavations will be required for the project.

Our field exploration at the project site encountered alluvium overlying basalt rock formation with depth. Therefore, we anticipate that conventional excavation techniques using backhoe equipment may be considered for the planned excavations. However, deeper excavations into the basalt rock formation may require the use of hoe-rams or chipping.

In general, we believe that interlocking steel sheet piling or other similar methods should be used for temporary shoring purposes, especially where dewatering of the excavations will be necessary. It should be noted that installation of the sheet pile shoring to the desired depths at the site may require predrilling of the sheet pile locations. For shallow excavations and excavations in open areas, we believe that a cantilever sheet pile shoring system may be considered. For deeper excavations, we recommend using interlocking steel sheet piling with horizontal bracing for excavation support in order to reduce the potential for significant adjacent ground movement.

A monitoring program should be developed and implemented by the contractor to detect ground movement and/or subsidence adjacent to the excavations, which may result in damage to nearby structures and pavements. It should be noted that minor settlements may occur during and after installation of the sheet piles. Therefore, it is recommended that the contractor retain a qualified geotechnical engineer to design and evaluate the shoring system used.

3.3.1 Excavation Method

In general, the contractor should determine the method and equipment to be used for excavation, subject to practical limits and safety considerations. Based on our field exploration and the available information, the alluvial soils encountered in the borings may be excavated with conventional earthmoving equipment. However, deeper excavations extending into the basalt rock formation may require the use of hoerams or chipping.

The excavated soils should not be stockpiled closer than a horizontal distance equal to the depth of the excavation measured from the outside edge of the excavation in order to reduce the potential for appreciable ground movement. In addition, the excavated soils should be stockpiled at least 15 feet away from existing underground utilities to reduce the potential for appreciable ground movement or subsidence, which may damage the existing underground utility line.

3.3.2 Construction Support

We anticipate that excavation depths of up to about 30 feet may be required in localized areas for the project construction. Based on the subsurface soil conditions encountered in the borings, we believe that temporary shoring of the sides of the excavations will be necessary to protect personnel working in the excavations. Temporary shoring of the excavations using steel sheet pile shoring, or other similar methods, should be considered.

It should be noted that installation of the sheet pile shoring to the desired depths at the site may require predrilling of the sheet pile locations, especially where basalt formation was encountered at the planned bottom-of-excavation depth for the below-ground structures. For shallow excavations and excavations in open areas, we believe that a cantilever sheet pile shoring system may be considered. For deeper excavations, we recommend using interlocking steel sheet piling with horizontal bracing for excavation support in order to reduce the potential for significant adjacent ground movement.

Use of an interlocking sheet pile shoring system may also serve as a cut-off wall to aid in the dewatering operations, which is further discussed in the “Dewatering” subsection. The sheet piles should be driven with a suitable hammer to a sufficient depth to reduce the potential for areal ground subsidence and to reduce the amount of dewatering within the excavations due to the relatively permeable nature of the subsurface soils. The contractor should carefully evaluate the potential for bottom heave and design the shoring system accordingly.

It is important that adequate sheeting is installed prior to the excavation and maintained tight against the excavation walls with proper bracing during excavation. The properly braced sheeting is essential to reduce the potential for appreciable lateral movements of the adjacent ground into the excavation, which may result in potential settlements or distress to adjacent structures or other improvements, such as roads or utilities.

The adequacy and safety of the shoring installation should be made the sole responsibility of the contractor. Its representative should be required to be continuously present on-site during excavation and construction work. They will have the best opportunity to promptly observe changing conditions during construction, such as unforeseen subsurface soil conditions, unexpectedly high groundwater table, inappropriate construction sequence or techniques, etc., which may adversely affect shoring stability.

However, it must be noted that some minor movements of the shoring system and the adjacent ground may still occur due to changes in earth stresses during excavation. Due to the complexity of the stress changes, it is difficult to accurately estimate the magnitude of movement. The magnitude also depends greatly upon workmanship, such as how quickly and tightly the shoring and bracing supports are installed, the subsoil conditions, the size of the excavation, and the rate of excavation. In addition, it should be noted that settlement of the existing ground may occur as a result of the vibrations generated during the installation of the sheet pile shoring. Therefore, special attention should be given by the contractor during the sheet pile installation process to reduce the potential for appreciable ground settlement.

It is important to realize that the excavation shoring should be installed properly and as early as practical, if necessary, and that the adjacent ground should be continuously monitored for cracks, dips and/or other indications of movements with instruments.

A monitoring program should be developed and implemented by the contractor to detect ground movement and/or subsidence adjacent to the excavations, which may result in damage to nearby structures and pavements. It should be noted that minor settlements may occur during and after installation of the sheet piles. Therefore, it is recommended that the contractor retain a qualified geotechnical engineer to design and evaluate the shoring system used.

3.4 Dewatering

Dewatering of excavations will be necessary where the existing groundwater level is above the bottom of the proposed excavation. Groundwater was encountered at an elevation of about 0 and +10 feet MSL in the borings drilled during our field exploration. Based on the groundwater level anticipated, we envision that dewatering will be required at some of the planned excavations. Therefore, dewatering provisions will need to be included in the contract documents for the proposed construction. Since the excavation may involve the discharge of groundwater, a National Pollutant Discharge Elimination System (NPDES) permit may be required for this discharge. The contractor should consult their independent consultant for the latest regulations and information pertaining to the permit application.

Because of the granular nature of some of the subsurface soils and fractured nature of the encountered basalt rock formation, we anticipate that the subsurface materials encountered are relatively permeable. Therefore, dewatering of the excavation may involve moderate volumes of water. Dewatering by means of a well point system along the outside of the excavations is generally not recommended. The resultant areal depression of the natural groundwater table could induce consolidation of the existing in-situ soils resulting in potential ground settlement that could affect nearby structures. The potential impact of the dewatering system selected on depressing the natural groundwater table must be carefully evaluated by the contractor prior to dewatering.

It is our opinion that a cut-off wall system, such as interlocking steel sheet piles, should be considered to aid in dewatering the excavation. However, sumps will be needed to collect water that percolates up into the base of the excavation or infiltrates through the sheet piles. The sheet piles should be driven to a sufficient depth to reduce the potential for areal ground subsidence and to reduce the amount of dewatering within the excavations. Use of an interlocking steel sheet pile shoring support system with a tremie concrete plug is relatively watertight, which should allow the groundwater levels outside the excavations to be maintained close to the original pre-construction levels. Therefore, some type of groundwater control requirement should be specified in the contract documents.

As previously mentioned, installation of the sheet pile shoring to the desired depths at the site may require predrilling of the sheet pile locations. The presence of these predrilled holes directly adjacent to the sheet pile shoring may serve as conduits for groundwater to infiltrate the sheet pile shored excavation. This condition could result in large volumes of seepage water to infiltrate the shored excavation requiring additional dewatering efforts and disposal of the dewatered effluent. Therefore, the contractor should take precautionary measures to avoid these conditions, which could contribute significantly to the dewatering requirements for the project.

Dewatering for construction is the responsibility of the contractor. The selection of equipment and methods of dewatering should be left up to the contractor, and he/she should be aware that modifications to the dewatering system may be required during construction depending on the conditions encountered. The dewatering method selected should have minimal impact on the groundwater level surrounding the proposed excavation. The dewatering operations should be coordinated with the shoring support such that the stability of the excavations is not jeopardized. The operations should be carried out without softening the bottom of the excavations.

It is our opinion that the definition of "Dewatering" in the contract documents should be written to include works or systems required to lower the natural groundwater table and/or to exclude water from the excavations to allow construction of the proposed structures under safe and dry conditions. These works or systems may include, but are not limited to, pumping.

3.4.1 Dewatering Considerations

We suggest considering the following three basic criteria in the selection of a suitable method of dewatering:

a. The dewatering method should result in the least disturbance or damage to existing buildings, roads, and the environment.

b. The dewatering method should maintain the stability of, and provide safe and dry working conditions in, the excavation.

c. The dewatering method should be sufficiently flexible to allow modifications to accommodate various ground conditions.

3.4.2 Dewatering Precaution and Monitoring

The potential impact of the dewatering system selected on depressing the natural groundwater table must be carefully evaluated by the contractor prior to dewatering. It is recommended that the contractor retain a qualified geotechnical engineer to design and evaluate the dewatering system used.

The impact and safety of the dewatering operations should be made the sole responsibility of the contractor. Its qualified representative, who should be continuously present on-site during dewatering activities, will have the best opportunity to promptly observe the effects of dewatering during construction and to implement, as soon as possible, necessary precautionary or remedial measures including, but not limited to, slowing down or stopping the dewatering operations.

Where encountered at the bottom of excavations, permeable granular subsoils may be susceptible to piping and "quick" conditions. The dewatering operations should be carried out without creating a "quick" condition or softening at the excavation bottoms. Therefore, the project dewatering operations should be performed without pumping out soil fines (pumping clear water only) and should be coordinated with the shoring installation such that the excavation stability is not adversely affected. Excessive pumping, which removes soil fines, may result in "blowing" or heaving of the excavation bottom or sides.

Groundwater drawdown outside the excavation will cause additional settlement resulting from consolidation of the loose compressible soils. Therefore, the use of a deep well system outside the excavations to draw down the groundwater level should not be allowed.

Special caution should also be taken to avoid dewatering utility trenches connected to the excavations. If this occurs, the granular bedding and/or backfill in the utility trenches could act as subdrains and cause significant areal groundwater drawdown. Significant areal groundwater drawdown would result in

ground settlements and potential damage to utility lines and/or other existing adjacent structures.

3.5 Retaining Structures

We anticipate that retaining structures for the new sewer pump station basement walls, underground storage tanks, and grade separation will be required for the project. In general, we believe retaining wall foundations may be designed in accordance with the recommendations and parameters presented in the "Building Foundations" section herein. In addition, retaining wall foundations should be at least 18 inches wide and should be embedded a minimum of 24 inches below the lowest adjacent finished grades. For sloping ground conditions, the footing should extend deeper to obtain a minimum 6-foot setback distance measured horizontally from the outside edge of the footing to the face of the slope. Wall footings oriented parallel to the direction of the slope should be constructed in stepped footings.

Retaining structures should be designed to resist lateral earth pressures due to the adjacent soils and surcharge effects caused by loads adjacent to the walls. The recommended lateral earth pressures for the design of the retaining structures, expressed in equivalent fluid pressures of pounds per square foot per foot of depth (pcf), are presented in the following table.

LATERAL EARTH PRESSURES FOR DESIGN OF RETAINING STRUCTURES			
Backfill Condition	**Earth Pressure Component**	**Active** (pcf)	**At-Rest** (pcf)
Level Backfill	Horizontal	40	58
	Vertical	None	None
Maximum 2H:1V Sloping Backfill	Horizontal	64	80
	Vertical	32	40

The values provided in the table above assume that on-site granular soils or select granular fill materials will be used to backfill behind the retaining structures. It is assumed that the backfill behind the retaining structures will be compacted to between

90 and 95 percent relative compaction per ASTM D1557. Over-compaction of the retaining structure backfill should be avoided.

In general, an active condition may be used only for gravity walls or walls that are free to deflect by as much as 0.5 percent of the structure height. If the tops of structures are not free to deflect beyond this degree or are restrained (such as the pump station and manhole walls), the structures should be designed for the at-rest condition. These lateral earth pressures do not include hydrostatic pressures that might be caused by groundwater trapped behind the structures.

For below groundwater conditions, an at-rest lateral earth pressure of 88 pcf and a passive resistance of 190 pcf may be used.

Surcharge stresses due to areal surcharges, line loads, and point loads within a horizontal distance equal to the depth of the structure should be considered in the design. For uniform surcharge stresses imposed on the loaded side of the structure, a rectangular distribution with a uniform pressure equal to 36 percent of the vertical surcharge pressure acting over the entire height of the wall, which is free to deflect (cantilever), may be used in the design. For walls that are restrained, a rectangular distribution equal to 53 percent of the vertical surcharge pressure acting over the entire height of the structure may be used for design. Additional analyses during design may be needed to evaluate the surcharge effects of point loads and line loads.

Dynamic lateral earth forces due to seismic loading ($a = 0.249g$) may be estimated by using $8.6H^2$ pounds per linear foot of wall length for level backfill conditions, where H is the height of the wall in feet. It should be noted that the dynamic lateral earth forces provided assume that the below-grade structure walls are in a restrained condition. For the non-restrained condition with about 1.4 inches in lateral deflection, a dynamic lateral earth force of $2.6H^2$ pounds per linear foot of wall length for level backfill conditions may be used. The resultant force should be assumed to act through the mid-height of the wall. The above dynamic lateral earth forces are in addition to the static lateral earth pressures provided previously. An appropriately

reduced factor of safety may be used when dynamic lateral earth forces are accounted for in the design of the below-grade structure walls.

3.6 Pump Station Foundation

Based on the information provided, we understand that the North Pump Station and the South Pump Station may extend down to about +6.5 and -13.5 feet MSL, respectively. Based on our field exploration, we believe that a mat foundation system may be used to support the new pump stations planned at the sites. A net allowable bearing pressure of up to 10,000 psf may be used in the design of the mat foundation bearing on the underlying basalt rock formation. The bearing value recommended is for dead-plus-live loads and may be increased by one-third (⅓) for transient loads, such as those caused by wind or seismic forces.

We envision that waterproofing would be provided for the underground pump station structures planned at the site. We recommend that a minimum 4-inch thick mud slab be placed under the foundation slab in order to provide a flat and smooth surface for placement of the waterproofing.

Due to the relatively deep depth of the underground structures and the groundwater levels encountered at the project site, the proposed pump stations will be subjected to buoyant uplift forces. The groundwater elevations measured during our field exploration ranged from about 0 and +10 feet MSL. As indicated previously, accurate in-situ groundwater readings could not be taken due to the time it took for the drilling water to dissipate. For evaluating uplift forces due to hydrostatic pressures, a high groundwater level of Elevation +3 feet MSL may be used for design to consider tidal fluctuations.

If the foundations for the pump stations are designed and constructed in accordance with the recommendations presented herein, we estimate the total mat foundation settlement to be less than 1 inch. Differential settlements between the center and the edge of the mat foundation supported on the basalt rock formation should be on the order of about 0.5 inches.

3.7 Sewer Manhole Structures

Based on the information provided, manhole structures will be constructed for the new sewer lines. Based on the borings, we anticipate that the new manhole structures will bear on stiff and dense alluvium. An allowable bearing pressure of up to 3,000 psf may be used for the design of the manhole structures bearing on the stiff and dense alluvium.

A minimum 6-inch gravel cushion layer should be provided between the bottom of the manhole structure and the underlying foundation soils to provide more uniform bearing support. The gravel cushion layer should consist of No. 3B Fine gravel (ASTM C33 No. 67 size).

The lateral earth pressures acting on the proposed underground manhole structure will depend on the type of backfill used, the extent of backfill, and the compactive effort on the backfill material around the structure. We recommend designing the new manhole structures to resist the lateral earth pressures (at-rest conditions) from the adjacent soils provided in the “Retaining Structures” section herein.

3.8 Installation of New Sewer Lines

As previously mentioned, it is anticipated that the invert of the new gravity sewer line and sewer force mains will be located at depths of about 6 to 15 feet below the existing ground surface. We understand that most of the new sewer utilities will be installed using conventional open-cut trenching (cut-and-cover) methods. However, we understand that trenchless utility installation methods will be required for four separate crossings: one to connect the Package A gravity sewer line to the North Pump Station, one for the Package B 12-inch diameter gravity sewer line to cross beneath an existing bomb shelter, and two to connect the 10-inch diameter force main from the North Pump Station to the planned WWTP.

Based on the above considerations, we recommend three utility installation alternatives consisting of open-cut trenching, pilot tube microtunneling (PTMT), and horizontal directional drilling (HDD) installation methods. Details of these three installation methods are discussed in the following sections.

3.9 Open-Cut Trenching Installation Method

The methods and equipment to be used for excavation should be determined by the contractor, subject to practical limits and safety considerations. The excavation should comply with all applicable local, state, and federal safety requirements. Trench shoring design and installation should be the responsibility of the contractor. Trench shoring and bracing should conform to the appropriate health and safety requirements.

In general, for support of the utility lines, we recommend that a granular bedding consisting of 6 inches of No. 3B Fine gravel (ASTM C33, No. 67 gradation) be used under the pipes. The initial backfill up to about 1 foot above the pipes should consist of free-draining backfills, such as No. 3B Fine gravel, to reduce the potential for pipe damage from backfill compaction. It is critical that a free-draining granular material is used to reduce the potential for formation of voids below the haunches of pipes and to provide adequate support for the sides of the pipes. The use of on-site soils as backfill immediately around utility pipes is not recommended. Where groundwater is encountered, a non-woven filter fabric (Mirafi 180N or equivalent) should wrap around the bedding material and should extend up to the walls of the trench excavation to a level of about 12 inches above the pipes.

The upper portion of the trench backfill from the level 1 foot above the pipes to the finish subgrade should consist of the approved on-site granular soils or select granular material. The backfill material should be moisture-conditioned to above the optimum moisture content, placed in level lifts not exceeding 8 inches in loose thickness, and compacted to a minimum of 90 percent relative compaction to reduce the potential for future ground subsidence. The upper 3 feet of the trench backfill below the pavement subgrade should be compacted to not less than 95 percent relative compaction. Mechanical compaction equipment should be used to compact the materials at the project site. Water tamping, jetting, or ponding should not be used to compact the backfill material.

Loads on buried pipes are influenced by the width of the trench, size of the pipes, unit weight of backfill material, and frictional resistance between the backfill material and the trench walls. To calculate the vertical loads acting on the buried pipes, an average

unit weight of 120 pcf may be used for compacted backfill material within the trench excavation and above the pipes. In addition, a coefficient of friction of 0.25 may be used to calculate the frictional resistance between the compacted backfill and the sidewalls of the excavated trench. For the underground pipes, earth forces upon the pipe increase rapidly with the width of the trench. Therefore, the width of the trench should be kept to a minimum. Traffic loads on the buried pipes should also be considered for the portion of the pipes located in roadway areas.

Precaution should be taken against the occurrence of pipeline floatation before and during trench backfilling due to possible influx of large quantities of groundwater into the trenches. The buoyant uplift forces due to groundwater influx may lift empty or even partially water filled pipes.

3.10 Pilot Tube Microtunneling

Pilot tube microtunneling (PTMT), or guided auger boring, employs the pipe jacking and guidance system used for microtunneling, the steering method used for horizontal directional drilling, and the cuttings removal system used in auger boring for the installation of pipes up to 36 inches in diameter. This method of pipe installation can install the pipe to the current standard of line and grade requirements for gravity sewer lines. The maximum drive length using this method is about 400 feet and will depend on the ground conditions and PTMT operator's skill.

The PTMT method typically consists of drilling a pilot hole about 4 inches in diameter. A target with electric light emitting diodes is mounted in the steering head and the head position is monitored using a camera-mounted theodolite or laser and TV monitor. The slanted surface of the drill head is used for steering. After completion of the pilot hole, the bore hole is enlarged by a reamer and auger casing with augers.

We understand that two trenchless gravity sewer line crossings are planned for the project: one crossing beneath Maui Veterans Highway as part of Package A, and one crossing beneath an existing bomb shelter adjacent to Maui Veterans Highway as part of Package B. Due to the small inclination for the planned gravity sewer lines

(about 2 percent), we recommend PTMT instead of HDD for the trenchless installation of these two gravity sewer line crossings to maintain the required grades.

3.10.1 Anticipated Tunneling Conditions

Evaluation of the subsurface conditions is important in assessing the viability and feasibility of PTMT techniques and in determining appropriate construction techniques. For the design and cost estimation pertaining to PTMT, special attention should be given to the characteristics of the soils that are likely to be encountered. Some of the important factors relating to the subsurface soil conditions that may significantly influence construction costs include face or heading stability, settlement potential and magnitudes, allowable passive pressures for providing thrust block resistance, groundwater control, muck characteristics, and/or special disposal requirements.

Based on the subsurface conditions encountered in our borings, it appears that the new gravity sewer line sections for DLNR Sewer from Station Nos. 0+00 to END and 222+00 to 232+00 will likely traverse alluvial deposits, saprolite, and basalt formation as shown on Plates 3.3 and 3.4. The alluvial deposits generally consist of medium stiff to hard sandy silt, the saprolite generally consists of hard silt, and the basalt formation grades from medium hard to hard.

3.10.2 Potential Tunneling Difficulties

An assessment of the ground conditions likely to be encountered along the PTMT excavations is important for evaluating the face stability of the excavations and to provide information on the selection of appropriate equipment and methods for the tunnel and shaft construction. The ground conditions should be assessed to reduce the potential for loss of ground, surface settlement, and damage to existing utilities, buildings, roadways, and other improvements as a result of the planned tunneling operations.

Based on our review of the subsurface conditions encountered along the new DLNR Sewer alignment from Station Nos. 0+00 to END and 222+00 to 232+00, we believe that one of the key geotechnical engineering considerations for the PTMT

construction method would be the presence of cobbles and boulders in the alluvium and saprolite, difficult drilling through the basalt rock formation, and a mixed-face condition between the alluvium/saprolite and basalt rock interface (see following sections).

Based on the subsurface conditions encountered in our field exploration, we believe that the anticipated proper PTMT operations are not likely to result in significant damage to the roadways or utilities above the tunnel, or to the surrounding structures. However, special attention should be given to the potential for damage to roadways and adjacent properties due to the installation of the shoring system for the jacking and receiving pits.

3.10.3 Cobbles and Boulders

Ground that contains cobbles and boulders can be problematic for microtunneling equipment. A boulder or cluster of cobbles encountered in the heading of the tunnel boring machine may severely hinder or even halt progress of the microtunneling operations. It should be noted that cobbles and boulders may be present in the alluvial and saprolitic deposits encountered at the site.

3.10.4 Mixed-Face Conditions

Based on the subsurface conditions encountered and the proposed depths of the new gravity sewer line alignments, we believe that the PTMT alignments will likely traverse near the boundary of the alluvium/saprolite and the top of the basalt formation, as shown on Plates 3.3 and 3.4. Due to the difference in the relative density of these materials, deflection of the disk-cutting head (causing difficulties in steering) may be encountered at the interface between the alluvium/saprolite and basalt formation. The disk-cutting head may skid along the top of the basalt formation, which may result in the potential for deviation of the microtunneling boring machine from the planned lines and grades. Therefore, we recommend modifying the gravity sewer line alignment to avoid the soil-rock interface in order to make the planned lines and grades.

3.10.5 Jacking and Receiving Pits

The potential presence of cobbles and boulders within the alluvium and saprolite, and the presence of basalt formation encountered during our field exploration may pose difficulties during construction of the jacking and receiving pits. Based on the subsurface conditions at the site, we believe that the use of interlocking steel sheet piles for shoring of the jacking and receiving pits would be appropriate for this site. Considerations may also be given to the use of concrete caissons for the jacking and receiving pits. It should be noted that the contractor may encounter significant difficulties in order to advance the concrete caissons to the required penetration depths due to the potential presence of cobbles and boulders, and the basalt formation encountered during our field exploration.

Due to the subsurface conditions at the site, we recommend that the sheet pile locations for excavation support be predrilled in order to achieve the required penetration below the bottom of excavation.

Due to the variable subsurface conditions anticipated along the new gravity sewer line alignments, each jacking and receiving pit should be designed individually by the contractor for the appropriate lateral loads and the subsurface conditions. In addition, it should be noted that care should be exercised to avoid truncating the existing utility lines during installation of the steel sheet piles.

3.10.6 Excavation Method

It is anticipated that conventional earthmoving equipment may be used to excavate the materials from within the jacking and receiving pits based on the subsurface conditions encountered. However, it should be noted that potential cobbles and boulder-sized materials may be present at some of the jacking and receiving pit locations. In addition, we anticipate that some of the deeper excavations (or sheet pile embedments) will extend into the basalt formation. Therefore, some areas of the pit excavation may require predrilling or heavy equipment for excavation.

It should be emphasized that the excavated soils should not be stockpiled closer than a horizontal distance equal to the depth of the excavation from the edge of the

excavation in order to reduce the potential for appreciable ground movement toward the excavation.

3.10.7 Thrust Block Resistance

The thrust block at the jacking pit provides the reaction for the main jacks when pushing the pipe forward. The allowable passive pressure resistance of the soil, which is a function of the strength of the soil, will control the thrust resistance that can be developed. It may seem reasonable to allow the thrust block to develop the full passive pressure resistance because this is a temporary construction loading condition. However, it must be recognized that relatively large strains will be required in order to develop the maximum passive pressure resistance. At the jacking loads that impose stresses approaching the maximum passive pressure resistance, there may be large movements of the thrust block in response to the strains required to develop full passive pressure resistance.

In addition, large movements of the thrust block are not desirable for pipe jacking because the movements are usually not uniform and it becomes difficult to maintain the thrust block perpendicular to the pipe alignment. If the thrust block does not remain square, the force applied to the pipe may not be uniform, resulting in eccentric loading that could damage the pipe.

Movements of the thrust block can also be controlled by limiting the allowable passive pressure resistance to about one-half of the maximum passive pressure resistance. This corresponds to a much lower level of strain and smaller soil movements (strain compatible design). If the project requires higher jacking forces than can be safely transferred to the soil mass behind the thrust block, then the soil mass should be improved or stabilized.

3.10.8 Other Considerations

Excavation and construction works should conform to Federal, State, and other safety requirements. The excavation support and shoring system used must comply with all applicable safety requirements. It is recommended that the contractor retain a qualified geotechnical engineer to evaluate and design the

shoring system used. The adequacy and safety of the shoring installation is the responsibility of the contractor. His/her representative, who should be required to be continuously present on site during excavation and construction work, will have the best opportunity to promptly observe any changing conditions during construction, such as unforeseen subsurface conditions, unexpectedly high groundwater table, inappropriate construction sequence or techniques, etc., which may adversely affect shoring stability.

Even if good construction procedures are followed, some movement of the shoring system and the adjacent ground may still occur due to changes in earth stresses during excavation. Due to the complexity of the stress changes, it is difficult to estimate accurately the magnitude of ground movement. The magnitude of ground movements also depends greatly upon workmanship, such as how quickly and tightly the shoring supports are installed, the subsurface conditions, the size of the excavation, and the rate of excavation.

3.11 Horizontal Directional Drilling Method

Horizontal directional drilling (HDD) is a trenchless, steerable installation method using a multi-axis drilling machine to bore a small diameter pilot hole in the subsurface. The pilot hole is bored using either controlled fluid jetting or fluid-assisted mechanical cutting, or a combination of the two methods. Depending on the subsurface conditions, water or water mixed with bentonite and/or polymer can be used as a drilling fluid in a directional drilling application. The pilot hole is reamed (as necessary) to accommodate the pipe(s) to be installed. The pipe is pulled back into the reamed hole by the drilling machine. Most HDD systems use slurry to stabilize the walls of the borehole and to reduce the frictional drag on the pipeline being installed. Steering corrections are made in the subsurface materials by rotating the slanted cutter shoe to the desired orientation and then advancing the shoe and string without rotation.

In general, the HDD pilot hole is drilled at a slight angle below horizontal with entry and exit angles between 8 and 15 degrees measured from horizontal. However, steeper entry angles (about 20 degrees) may be required to avoid underground utilities and/or obstructions. Shallow working pits may be required at each end of the bore to

allow placement of the drill pipe and to allow transition to the conventional pipe trench installation. The casing pipe or product pipe when a casing is not used should be installed in one continuous operation, preferably without pause, and should protrude a sufficient distance beyond the entry and exit points to allow proper termination or connection at a later time. Typically, high-density polyethylene (HDPE), steel, and polyvinyl chloride (PVC) pipes may be installed by HDD methods.

The vertical and horizontal alignments of the drill hole are typically monitored from the surface by a locator, which tracks signals from the transmitter contained inside the drill head housing. Other methods of tracking the cutting tool, such as in-hole steering, are generally recommended to provide more precise line and grade information. The contractor should carefully monitor the drilling operation, when approaching property boundaries, and existing underground utilities or structures to assure that proper clearances are maintained.

We anticipate that larger diameter pipe sleeves or casings will need to be installed using the HDD method for the trenchless force main crossings. After installation of the sleeves or casings, we envision that the 10-inch diameter ductile iron force mains will be pulled through the sleeves or casings and the pipe annulus will be grouted.

Based on typical joint sizes for 10-inch diameter ductile iron pipes, we used 30-inch diameter high density polyethylene (HDPE) pipes in our preliminary HDD installation analyses. The HDD Utility Crossing Plan & Profiles are presented on Plates 3.1 and 3.2.

3.11.1 HDD Geotechnical Considerations

The technical feasibility of the HDD method depends on the characteristics of the subsurface materials at and along the depth of the pipeline profile, as well as the length of the drill path, and diameter of the pipes to be installed (American Gas Association, 1995).

The subsurface conditions at the DHHL-FM1 crossing (Station No. 0+00 to END) generally consisted of alluvium overlying saprolite and basalt formation with depth.

Based on our experience in the area, we also anticipate that the Maui Veterans Highway embankment may be composed of boulder fill. The alluvium encountered was generally variable, consisting of medium stiff to very stiff sandy/gravelly silt and medium dense to dense sand with a little gravel and some cobbles. The saprolite generally consisted of hard silt with some sand and traces of gravel, and the basalt formation graded from medium hard to hard. A generalized soil profile along the DHHL-FM1 crossing is presented on Plate 3.1.

The subsurface conditions at the Force Main-FM2 crossing (Station No. 0+00 to END) generally consisted of varying layers of silty and sandy alluvium with a localized cobble layer encountered at a depth of about 10 feet below the existing ground surface. The alluvium generally consisted of loose to medium dense sand and soft to stiff sandy/clayey silt. The cobble layer encountered was approximately 3 feet thick and graded to very dense. A generalized soil profile along the Force Main-FM2 crossing is presented on Plate 3.2.

Based on the proposed force main alignments, we anticipate that the HDD drill path may pass above the cobbly materials encountered during our field exploration. However, if cobbles are encountered during the HDD construction work, we expect that the cobbles would cause some difficulty in drilling and steering the pilot hole as well as drilled hole stability problems, such as caving in of the pilot and reamed holes. The caved-in materials would obstruct or divert reaming tools or the pipe string during pipe pullback. This would substantially increase the pulling stresses on the pipe string and may impede pipe pulling or damage the pipeline. Therefore, modification of the vertical alignment of the proposed force mains may be necessary if the cobbly material is encountered during the HDD installation.

3.11.2 Pipe Size and Material

The most important design consideration for the pipe is the tensile stresses imposed on the pipe when it is pulled into place through the drilled hole. The magnitude of these tensile stresses is a function of the length of the installation as well as the subsurface conditions. Other important pipe design considerations are

the internal and external pressures acting on the pipe during and after installation. Factors affecting the loads and stresses on the pipe include the following:

1. Radius of curvature
2. Modulus of the pipe material
3. Thickness of the pipe (SDR)
4. Diameter (ID and OD) of the pipe
5. Temperature
6. Tension
7. Operating pressure
8. Differential pressure

In addition to the pipe design considerations mentioned above, the selected pipe material must have adequate corrosion resistance or be protected to resist internal and external corrosion.

We understand that 10-inch diameter ductile iron pipes will be used for the new sewer force mains. To facilitate installation, we envision that an over-sized HDPE sleeve or casing will be installed using HDD methods. The ductile iron force main would then be pulled through the HDPE sleeve.

HDPE pipes may be susceptible to failure during installation, unless they are properly designed. This failure mechanism of the pipe limits the length of installation that can be completed with HDPE pipe. Therefore, it is critical to select a pipe with an adequate allowable pulling (tensile) capacity.

The HDPE pipes should be selected to provide the maximum pipe thickness and strength for the proposed installation based on the results of the pipe stress analyses, considerations regarding HDD installation procedures, probable drill hole sizes, and materials in-filling the annulus between the HDD installed HDPE pipelines and the drilled hole. The contractor should adequately and properly ballast the pipelines during installation into the HDD drill hole to reduce the pipe weight, the effect of buoyancy, and the corresponding reduction in the tensile loads on the pipe string during pullback. Based on our preliminary analyses, we believe that the over-sized sleeves installed by HDD method may consist of 30-inch diameter HDPE pipe with a Standard Dimension Ratio (SDR) of 11 or better. The

HDPE pipe with an SDR of 11 or better should safely handle the loads imposed into the pipe during installation and the service life of the pipe.

3.11.3 Construction Staging Areas

Staging areas will be required at the entry and exit locations for the HDD installed pipelines. Staging area requirements at the entry locations will depend on the size of the drill rig to be utilized for the HDD installation. For Mini drill rigs, a typical area of about 15 feet by 40 feet would be required. Typical staging areas for Midi drill rigs require an ideal area of about 100 feet by 150 feet and a minimum area of about 60 feet by 100 feet. An ideal area of 200 feet by 300 feet and a minimum area of 100 feet by 150 feet typically are used for Maxi drill rigs. A summary of the typical staging area requirements at the entry location is presented in the following table.

STAGING AREA REQUIREMENTS AT ENTRY LOCATION		
Drill Rig Type	Ideal Area	Minimum Area
Mini	15 feet x 40 feet	N/A
Midi	100 feet x 150 feet	60 feet x 100 feet
Maxi	200 feet x 300 feet	100 feet x 150 feet

It should be noted that these requirements are ideal and may be changed based on the existing conditions at the site. Based on the size and lengths of the pipes being installed and the calculated pullback loads, we believe that a Midi or Maxi drill rig may be used to install the over-sized HDPE sleeves planned for the proposed project.

Additional staging areas are also needed for pipe storage and for laying-out the pipes when the pipe string is assembled for testing and pullback. The pipe string is positioned at the exit pit and can be laid on the ground or on rollers. The staging area for laying-out the pipe for testing and pulling back is not required throughout the duration of the HDD installation operation (usually a couple weeks prior to pipe pullback).

3.11.4 Construction Considerations

HDD equipment, tools, methods, and procedures selected by the contractor should be capable of drilling, reaming, and installing the HDPE pipes within the anticipated subsurface conditions described herein without damaging or over-stressing the pipe. Accurate tracking and drilling of pilot hole and proper reaming will be required to complete the installation of the new sewer force main sleeves using HDD methods.

The contractor should submit a detailed work plan and appropriate engineering calculations demonstrating that the selected method, equipment, tools, and procedures are capable of drilling, reaming, steering, tracking, and installing the HDPE pipes based on the subsurface conditions along the proposed HDD drill path. The contractor shall demonstrate that the contractor's means and methods will not cause damage to the HDPE pipes including exceeding the allowable pipe strength properties. Contingency plans and procedures also should be submitted for resolving obstruction problems during drilling, reaming, and pullback.

The soil conditions may be susceptible to hydraulic fracturing and discharge of drilling mud if excessive slurry pressures are used during the HDD operations. To prevent fracturing the ground and discharge of drilling fluids to the ground surface or channel, the drilling mud pressures applied at the drilling and reaming tools, and the slurry mud weight should be carefully monitored and controlled by the contractor. The contractor should be made responsible to ensure that no discharge of drilling fluids to the ground surface will occur. The contractor should submit calculations of the operating mud pressures based on the drill path.

Buried underground hazards, such as underground utilities and/or buried obstructions, may be present within the limits of the drill path during the HDD operation. Therefore, the directional control of the pilot drill bit is critical to the success of the proposed HDD installation. Underground utilities and features should be accurately identified, located, and avoided. The location of all underground utilities that cross the HDD alignments should be verified by potholing.

During the pilot hole drilling, the location and position of the drill bit should be tracked and documented in minimum 10-foot continuous increments along the drill path. The minimum radius of curvature should be maintained during the pilot hole drilling. The accuracy of the bore should be within a 5-foot radius of the approved exit point location.

3.11.5 Type of Drilling Fluid

Depending on the subsurface conditions, water or water mixed with bentonite and/or polymer may be used as a drilling fluid in a directional drilling operation. Water alone is normally suitable for drilling in silty or clayey soils. For soft and/or loose soils, polymer mixed with water will improve the stability of the borehole.

The amount of drilling additives (bentonite or polymer) depends on the subsurface conditions (and experience of the contractor). The water used in the drilling fluid should not be hard or salty because this will cause poor mixing or yield with the bentonite or polymer and the flocculated bentonite may tend to settle to the bottom of the tank. Hard water should be treated with soda ash, and saltwater should generally be avoided.

3.11.6 Muck and Slurry Disposal

Special muck and slurry handling procedures may be required for the HDD installation method for the proposed sewer force main sleeves. The properties of the various geologic units anticipated along the drill path as indicated by the grain size distribution tests should be taken into account in selecting an appropriate slurry separation plant.

In order to aid in a clean site and to more readily separate the materials, a solids control or slurry separation plant with shakers, screens, de-sanders, de-silter cones, and centrifuges may need to be considered. This will facilitate a more rapid separation and disposal process. Additives may need to be included to get the fine-grained materials to flocculate so that clean slurry can be returned to the drill head.

Muck resulting from the HDD operations should be removed from the site and should be disposed of properly at an acceptable facility or designated area. Slurry from the HDD operations should be pumped into trucks for disposal in accordance with the applicable governmental regulations and agencies. Contaminated soils and/or groundwater (if applicable) should be handled, tested, and disposed of in accordance with the project specifications, guidelines, and government requirements.

3.11.7 Installation Considerations

The pipe must be able to safely handle the loads imposed on the pipe during installation. The following items will need to be considered during the installation of the pipe.

- Tension Force
- Tensile Stresses
- External Pressure Due to Drilling Fluid
- Hydraulic Fracturing of the Near-Surface Soils

The tension (pull-back) force on the pipe must overcome several forms of resisting forces during the pullback sequence. The resisting forces during the pullback sequence include the friction between the pipe and the borehole, friction between the pipe and the ground surface, the “capstan” effect force (which develops around bends), and hydrokinetic drag force of the drilling fluid. The most important consideration during installation of the pipe by HDD methods is the tensile stresses imposed on the pipe when it is pulled into place through the drilled hole. HDPE pipes may be susceptible to failure during installation. Therefore, the tensile stresses acting on the pipe due to the pullback force should not exceed the safe tensile stress of the pipe that is being pulled back.

During the drilling operations, water only or water mixed with bentonite and/or polymer may be used as a drilling fluid. During pullback, the pipe may be subjected to external pressure due to the fluid head of the drilling fluid, whether it is water or a mixture of water and bentonite and/or polymer slurry. The external pressure acting

on the pipe due to the drilling fluid must not exceed the buckling pressure of the pipe during pullback.

Another important consideration during the drilling operations is to determine if the drilling fluid pressure in the borehole will exceed the hydraulic fracture pressure of the in-situ soils. The drilling fluid pressure is the sum of the hydrostatic pressure and circulation pressure required to overcome friction losses during flow. If the drilling fluid pressure exceeds the hydraulic fracture pressure of the in-situ soil or rock formation, there is a potential for heave and/or blowout of the ground surface.

3.11.8 Service Life Considerations

During the service life of the pipe, long-term loads are imposed on the pipe. The following long-term loads were identified for the service life of the HDPE pipes and were considered in our analyses:

- External Pressure Due to Earth and Live Loads
- Ring Deflection Due to Pipe Buoyancy
- Ring Deflection Due to Earth and Live Loads

After installation of the pipes by HDD methods, the drilled hole may deform considerably or even collapse. Drilled hole deformation normally is limited when arching in the soil is mobilized. Where arching in the soil develops, the earth pressure applied to the pipe is less than the overburden pressure. Typically, a depth of cover of at least five pipe diameters above the top of the pipe would be sufficient to develop arching in the soil.

Ring deflection is caused by the non-uniform pressure acting on the pipe due to buoyancy or from earth and live loads acting on the pipe. Ring deflection reduces the hydrostatic collapse resistance of the pipe and also produces tensile bending stresses in the pipe wall. When the pipe is submerged in drilling fluid, there is a pressure difference resulting from the difference in fluid head at the crown and invert of the pipe. The larger pressure acting at the invert of the pipe causes an upward deflection toward the crown causing ring deflection due to buoyancy. Ring deflection due to earth and live loads occurs when soil deforms near the crown of

the pipe, causing load to be applied to the crown of the pipe. An opposite reaction occurs at the invert of the pipe. Because the drilling fluid does not provide side support for the pipe, there is no horizontal pressure to resist the vertical deflection of the pipe. The ring deflection of the pipe must be limited to reduce the potential for instability of the pipe.

3.12 Horizontal Directional Drilling Method – Preliminary Design Analyses

Our engineering analyses to determine the feasibility of using a 30-inch OD (outside diameter) (SDR 11) HDPE pipe sleeve for HDD installation were based on our field exploration and laboratory test data. In addition, the following data and assumptions were used in our analyses.

1. The installation stresses on the pipe for the proposed HDD alignments were determined from the computer program BoreAid.
2. A dry installation condition with no fluid in the pipe was used in our analysis.
3. The existing ground elevations were determined from the available project plans.
4. The drilled hole for the pullback will have a diameter of about 1.5 times the diameter of the pipe(s) being installed.
5. The drilling fluid pressure versus the hydraulic fracture pressure of the in-situ soil and/or rock formation along the HDD alignments was determined from the computer program BoreAid.

The following analyses were performed to determine whether the HDPE pipes are feasible for the proposed HDD runs.

1. HDD Pull-back Forces and Stresses
2. Drilling Fluid Pressure Versus the Hydraulic Fracture Pressure of the In-Situ Soil

A summary of the maximum pullback forces and stresses for the 30-inch diameter HDPE sleeve installed by HDD methods is presented in the following table.

HDD PULLBACK FORCES AND PIPE STRESSES		
HDD Crossing	FM-1	FM-2
Pipe Type	30-inch OD (SDR 11)	30-inch OD (SDR 11)
Maximum Tension Force (lbs.)	54,900	38,251
Allowable Tension Force (lbs.)	268,587	268,587
Maximum Tensile Stress (psi)	506	548
Allowable Tensile Stress (psi)	1,110	1,110

3.12.1 Drilling Fluid Pressure versus Hydraulic Fracture Pressure

During drilling operations, the drilling slurry exerts a pressure in the borehole. If this pressure exceeds the hydraulic fracture pressure of the in-situ soil, then heave and/or blowout of the ground surface may occur. Drilling fluid pressure is determined from the sum of the hydrostatic pressure and circulation pressure of the drilling fluid. The hydraulic fracture pressure of the soil is the sum of the vertical in-situ stress of the soil and the shear strength of the soil.

Based on our preliminary analyses, we believe that the anticipated drilling slurry pressure in the borehole at the DHHL-FM1 crossing would not exceed the hydraulic fracture pressure of the in-situ soil deposits based on the planned alignment. However, based on our analyses, we believe that there is the possibility for hydraulic fracture near the entry and exit points of the Force Main-FM2 crossing. The contractor should exercise care in controlling the drilling slurry pressure near the entry and exit points to avoid hydraulic fracture of the in-situ soil.

3.13 Field Infiltration Testing

Infiltration tests were performed in general accordance with the procedures in Appendix D of the State of Maryland, Department of the Environment, “Stormwater Design Manual, Volumes I and II” (Rev. 2009). These procedures are consistent with other states’ procedures and generally may be considered an industry standard.

The field infiltration tests were performed at the planned locations of the soil aquifer treatment basins in Boring Nos. 26 through 28 and 35 through 37 by augering borings to the selected test depth of about 10 feet below the existing ground surface.

Upon reaching the test depth, a 4-inch diameter PVC solid casing was set to the bottom of the drilled hole to allow infiltration only through the soil exposed at the bottom of the boring. Falling head infiltration tests were performed to determine the infiltration rates of the underlying subsurface materials. Each test consisted of four trials of filling the casing with 24 inches of water and taking periodic readings over a one-hour trial period. The infiltration rate is calculated based on the result of the fourth and last trial for each test location. The results of the field infiltration testing at the two proposed WWTP locations (Packages E and F) are summarized in the following table. Detailed information of the tests is presented in Appendix D.

FIELD INFILTRATION TEST RESULTS			
Package	**Test Location**	**Test Depth** (feet)	**Infiltration Rate** (inches/hour)
E	B-26	10	1.0
	B-27	10	0.3
	B-28	10	0.0
F	B-35	10	0.0
	B-36	10	0.1
	B-37	10	0.0

Based on the infiltration testing, the subsurface soils at the depths and locations of our tests generally exhibited infiltration rates ranging from about 0 to 1.0 inches per hour with the majority of the infiltration rates of 0.3 inches per hour or less. Therefore, we recommend that a design infiltration rate of less than 0.5 inches per hour be used for the project.

It should be noted that the infiltration values presented above are the rates of infiltration through the soil exposed at the bottoms of a 4-inch diameter borehole, which may not represent the actual infiltration condition within the entire infiltration basin footprint. Due to the variability of the subsurface conditions, the infiltration capacity of the selected storm water disposal system should be confirmed by conducting additional infiltration tests during construction.

3.14 Site Grading

Based on the provided grading plans, we understand that site grading for the wastewater system project will include cuts and fills on the order of about 7 and 10 feet, respectively. Deeper cuts and fills will be required for some of the planned utilities and underground structures (as discussed above). The following site grading items are addressed in the succeeding subsections:

1. Site Preparation
2. Fills and Backfills
3. Fill Placement and Compaction Requirements
4. Cut and Fill Slopes

Site grading operations should be observed by a Geolabs representative. It is important that a Geolabs representative be present to observe the site preparation operations to evaluate whether undesirable materials are encountered during the excavation and scarification process, and whether the exposed soil and/or rock conditions are similar to those encountered in our field exploration.

3.14.1 Site Preparation

At the on-set of earthwork, areas within the contract grading limits should be cleared and grubbed thoroughly. Vegetation, debris, deleterious materials, existing structures to be demolished, and other unsuitable materials, should be removed and disposed of properly off-site to reduce the potential for contaminating the excavated materials.

Soft and yielding areas encountered during clearing and grubbing below areas designated to receive fill and/or future improvements should be over-excavated to expose firm natural material, and the resulting excavation should be backfilled with well-compacted fill. The excavated soft soils should not be reused as fill materials and should be properly disposed of off-site.

In general, the subgrades in cut areas and areas designated to receive fills should be scarified to a depth of about 8 inches, moisture-conditioned to at least 2 percent above the optimum moisture content, and recompacted to a minimum of 90 percent relative compaction. Relative compaction refers to the in-place dry density of soil

expressed as a percentage of the maximum dry density as determined by ASTM D1557. Optimum moisture is the water content (percentage by dry weight) corresponding to the maximum dry density.

3.14.2 Fills and Backfills

In general, on-site alluvial soils encountered during our field exploration should be suitable for use as general fill materials, provided that the maximum particle size is less than 3 inches in largest dimension. The on-site materials generated from the excavations may be used as a source of general fill or backfill materials provided that they are screened/processed of the over-sized materials to meet the above gradation requirements (less than 3 inches in largest dimension) and deleterious material such as vegetation is removed.

Imported materials should consist of non-expansive select granular material, such as crushed coral or basalt. The select granular fill should be well-graded from coarse to fine with particles no larger than 3 inches in largest dimension. The material should have a California Bearing Ratio (CBR) value of 20 or higher, and a swell potential of 1 percent or less when tested in accordance with ASTM D1883. The material should also contain between 10 and 30 percent particles passing the No. 200 sieve. Imported fill materials should be tested for conformance with these recommendations prior to delivery to the project site for the intended use.

Where groundwater is encountered (within the excavations), backfill materials should consist of free-draining granular materials, such as No. 3B Fine gravel (ASTM C33, No. 67 gradation), wrapped on all sides with non-woven filter fabric. The free-draining granular materials should be used up to a level of about 12 inches above the groundwater level to facilitate compaction of the fill materials. The free-draining granular fill materials should be used in a confined condition. Alternatively, lean concrete may be used as backfill material.

3.14.3 Fill Placement and Compaction Requirements

In general, fills and backfills should be moisture-conditioned to above the optimum moisture content, placed in level lifts not exceeding 8 inches in loose thickness, and

compacted to at least 90 percent relative compaction. The compaction requirement for the upper 3 feet of fill below areas subjected to vehicular traffic should be increased to at least 95 percent relative compaction. Compaction should be accomplished by sheepsfoot rollers, vibratory rollers, or other types of acceptable compaction equipment. Water tamping, jetting, or ponding should not be allowed to compact the fills.

3.14.4 Cut and Fill Slopes

In general, cut and fill slopes planned at the site should be designed with a slope inclination of 2H:1V or flatter. The filling operation should start at the lowest point and continue up in level horizontal compacted layers in accordance with the above fill placement recommendations. Fill slopes should be constructed by overfilling and cutting back to the design slope ratio to obtain a well-compacted slope face. Water should be diverted away from the tops of slopes, and slope planting should be provided as soon as possible to reduce the potential for erosion of the finished slopes.

3.15 Pavement Design

We understand that asphaltic concrete access roads, driveways, and parking lots are planned for the DHHL Pulehunui Wastewater System project. In general, we anticipate the vehicle loading for the access roads will primarily consist of maintenance vehicles, light trucks, and occasional heavy trucks.

We have assumed the pavement subgrade soils will be similar to the surface fill and/or alluvium materials generally encountered during our field exploration. Based on the above considerations, we recommend the following pavement sections for the design of this project.

Flexible Pavement for Access Roads and Driveways

2.5-Inch Asphaltic Concrete
8.0-Inch Aggregate Base Course (95 Percent Relative Compaction)
10.5-Inch Total Pavement Thickness on Moist Compacted Subgrade

Flexible Pavement for Access Road (Package C, Sta, 45+00 to 55+00)

2.5-Inch Asphaltic Concrete
10.0-Inch Aggregate Base Course (95 Percent Relative Compaction)
12.5-Inch Total Pavement Thickness on Moist Compacted Subgrade

Flexible Pavement for Parking Areas

2.0-Inch Asphaltic Concrete
6.0-Inch Aggregate Base Course (95 Percent Relative Compaction)
8.0-Inch Total Pavement Thickness on Moist Compacted Subgrade

The pavement subgrades should be scarified to a depth of about 8 inches, moisture-conditioned to at least 2 percent above the optimum moisture, and recompacted to a minimum of 95 percent relative compaction. Relative compaction refers to the in-place dry density of soil expressed as a percentage of the maximum dry density of the same soil established in accordance with ASTM D1557. Optimum moisture is the water content (percentage by dry weight) corresponding to the maximum dry density.

The aggregate base course material should meet the requirements stipulated in Section 31 of the Standard Specifications for Public Works Construction, City and County of Maui (September 1986). Aggregate base course materials should be moisture-conditioned to above the optimum moisture content, placed in level lifts not exceeding 8 inches in loose thickness, and compacted to no less than 95 percent relative compaction. California Bearing Ratio (CBR) and field density tests should be performed on the actual subgrade soils encountered during construction to confirm the adequacy of the above sections.

Paved areas should be sloped, and drainage gradients should be maintained to carry surface water off the site. Surface water ponding should not be allowed on the site during or after construction. Where concrete curbs are used to isolate landscaping in or adjacent to the pavement areas, we recommend extending the curbs a minimum of 2 inches into the soils below the aggregate base course and aggregate subbase layers to reduce the potential for migration of landscape water into the pavement section. Alternatively, a subdrain system could be constructed to collect the excess water from landscaping irrigation. For long-term performance, we recommend constructing a subdrain system adjacent to the paved/landscaped areas.

3.16 Design Review

Preliminary and final drawings and specifications for the proposed DHHL Pulehunui Wastewater System project should be forwarded to Geolabs for review and

written comments prior to construction. This review is necessary to evaluate conformance of the plans and specifications with the intent of the recommendations provided herein. If this review is not made, Geolabs cannot be responsible for misinterpretation of our recommendations.

3.17 Post-Design Services/Services During Construction

Geolabs should be retained to provide geotechnical engineering services during construction. The critical items of construction monitoring that require "Special Inspection" include the following:

- Observation of the shallow foundation excavations
- Observation of sheet pile installation and open excavation monitoring
- Observation of PTMT installation
- Observation of HDD installation
- Observation of the trench excavation, placement of bedding materials, and trench backfill
- Observation of fill placement and compaction

A Geolabs representative should monitor the construction to observe compliance with the intent of the design concepts, specifications, or recommendations and to expedite suggestions for design changes that may be required in the event that subsurface conditions differ from those anticipated at the time this report was prepared. The recommendations provided herein are contingent upon such observations.

END OF DISCUSSION AND RECOMMENDATIONS

SECTION 4. LIMITATIONS

The analyses and recommendations submitted herein are based, in part, upon information obtained from the field borings and bulk samples. Variations of the subsurface conditions between and beyond the field borings and bulk samples may occur, and the nature and extent of these variations may not become evident until construction is underway. If the variations then appear evident, it will be necessary to re-evaluate the recommendations presented herein.

The test boring and bulk sample locations indicated herein are approximate, having been estimated by taping from visible features shown on the topographic survey map transmitted by Austin, Tsutsumi & Associates, Inc. on October 23, 2019. Elevations of the borings were estimated from the elevation contours shown on the same plan. The boring locations and elevations should be considered accurate only to the degree implied by the methods used.

The stratification breaks represented on the Logs of Borings depict the approximate boundaries between soil types and, as such, may denote a gradual transition. Water level data from the borings were measured at the time shown on the graphic representations and/or in the text of this report. These data have been reviewed and interpretations made in the formulation of this report. However, it must be noted that fluctuation may occur due to variation in seasonal rainfall and other factors. These data have been reviewed and interpretations made in the formulation of this report.

This report has been prepared for the exclusive use of Austin, Tsutsumi & Associates, Inc. for specific application to the proposed *DHHL Pulehunui Wastewater System* project in accordance with generally accepted geotechnical engineering principles and practices. No warranty is expressed or implied.

This report has been prepared solely for the purpose of assisting the engineer in the design of the proposed wastewater system project. Therefore, this report may not contain sufficient data, or the proper information, to serve as the basis for preparation of construction cost estimates. A contractor wishing to bid on this project is urged to retain

a competent geotechnical engineer to assist in the interpretation of this report and/or in the performance of additional site-specific exploration for bid estimating purposes.

The owner/client should be aware that unanticipated soil/rock conditions and/or obstructions are commonly encountered. Unforeseen subsurface conditions, such as soft deposits, hard layers, cavities, or perched groundwater may occur in localized areas and may require additional probing or corrections in the field (which may result in construction delays) to attain a properly constructed project. Therefore, a sufficient contingency fund is recommended to accommodate these possible extra costs.

END OF LIMITATIONS

CLOSURE

The following plates and appendices are attached and complete this report:

Project Location Map..... Plate 1

Site Plans..... Plates 2.1 thru 2.5

HDD Crossing Plan & Profiles ..... Plates 3.1 and 3.2

PTMT Crossing Plan & Profiles ..... Plates 3.3 and 3.4

Field Exploration. .....Appendix A

Laboratory Tests. .....Appendix B

Photographs of Core Samples. .....Appendix C

Infiltration Test Records . .....Appendix D

-ΩΩΩΩΩΩΩΩΩΩ-

Respectfully submitted,

GEOLABS, INC.

By _____

Gerald Y. Seki, P.E.
Vice President

GS:NK:as

h:\7900Series\7932-00.nk1

PLATES

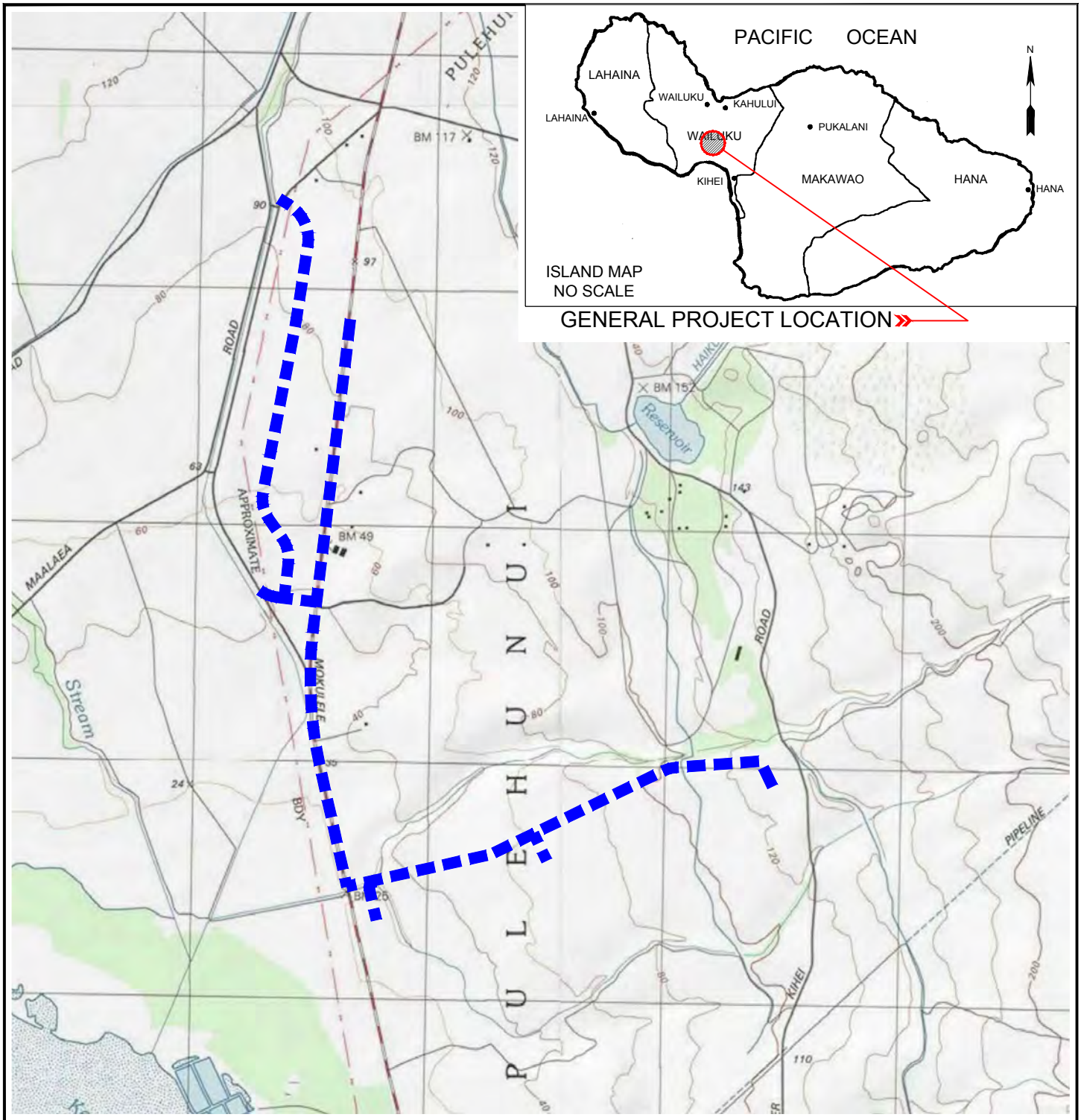

PROJECT LOCATION

PROJECT LOCATION MAP

DHHL PULEHUNUI WASTEWATER SYSTEM
PULEHUNUI, MAUI, HAWAII

2000 1000 0 2000 FT.

GRAPHIC SCALE

N

REFERENCE: MAP CREATED WITH TOPO!® ©2010 NATIONAL GEOGRAPHIC; ©2007 TELE ATLAS, REL. 1/2007.

GEOLABS, INC.
Geotechnical Engineering

DATE	DRAWN BY	PLATE
AUGUST 2019	ASP	1
SCALE	W.O.	
1" = 2,000'	7932-00	

CAD User: HENRY File Last Updated: August 08, 2019 7:34:17pm Plot Date: October 25, 2019 - 9:11:49am
File: T:\Drafting\Working\7932-00_DHHL_Pulehunui_Wastewater_System\7932-00PLM.dwg\1.0 PLM
Plotter: DWG To PDF-GEO.pc3 Plotstyle: GEO-No-Dithering.ctb

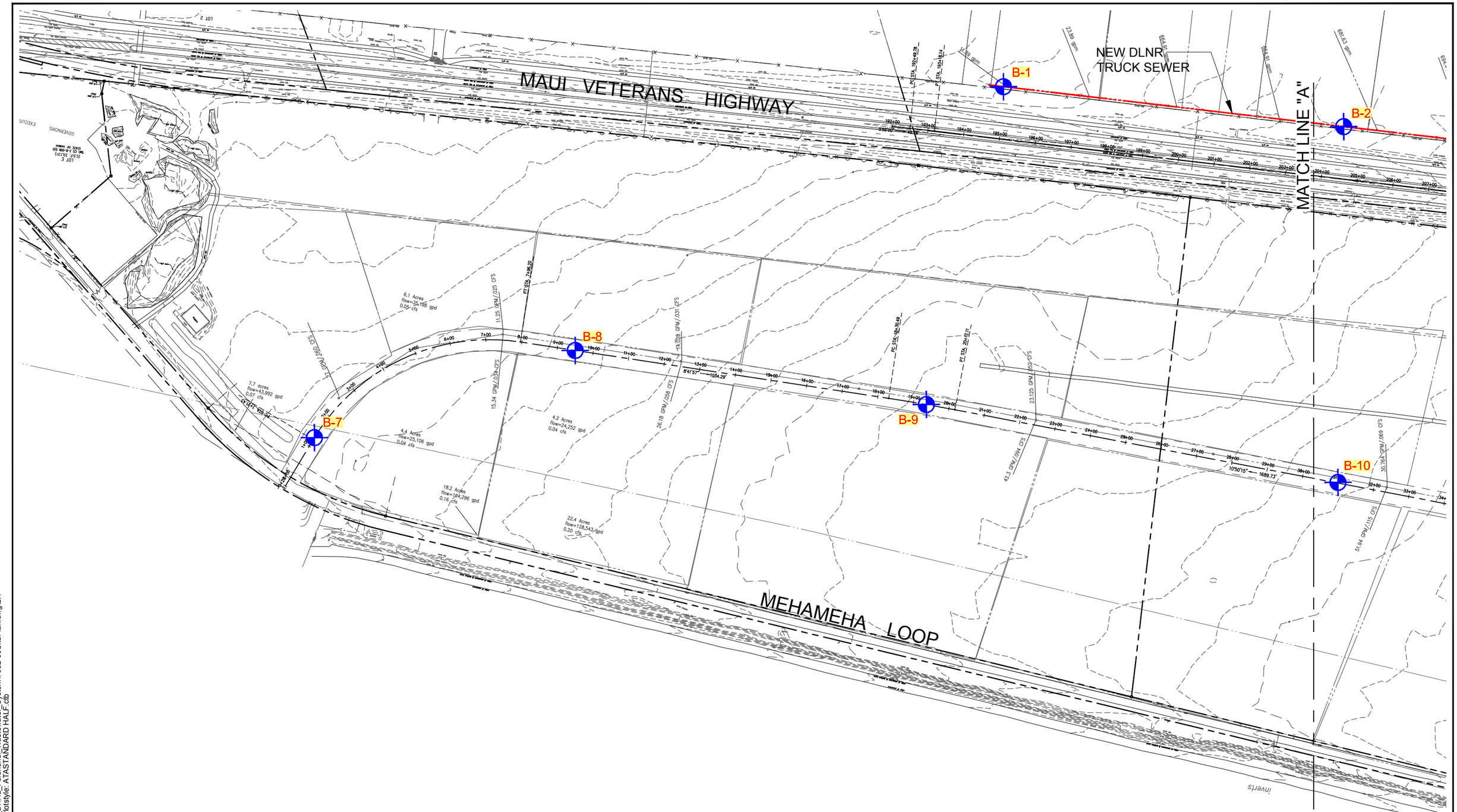

LEGEND:

APPROXIMATE BORING LOCATION

N

0 125 250 500 750 FT.

GRAPHIC SCALE

REFERENCE: TOPOGRAPHIC SURVEY MAP TRANSMITTED BY AUSTIN, TSUTSUMI & ASSOCIATES, INC. DATED OCTOBER 23, 2019.

SITE PLAN

DHHL PULEHUNUI WASTEWATER SYSTEM
PULEHUNUI, MAUI, HAWAII

GEOLABS, INC.
Geotechnical Engineering

DATE	DRAWN BY	PLATE
NOVEMBER 2019	ASP / HYC	2.1
SCALE 1" = 250'	W.O. 7932-00	

CAD User: ASPASIONJR File Last Updated: November 26, 2019 10:37:53am Plot Date: November 26, 2019 - 10:40:26am
File: T:\DraftingWorking\7932-00_DHHL_Pulehunui_Wastewater_System\7932-00SitePlan.dwg\2.1
Plotter: DWG To PDF-GEO.pc3 Plotstyle: ATASTANDARD HALF.ctb

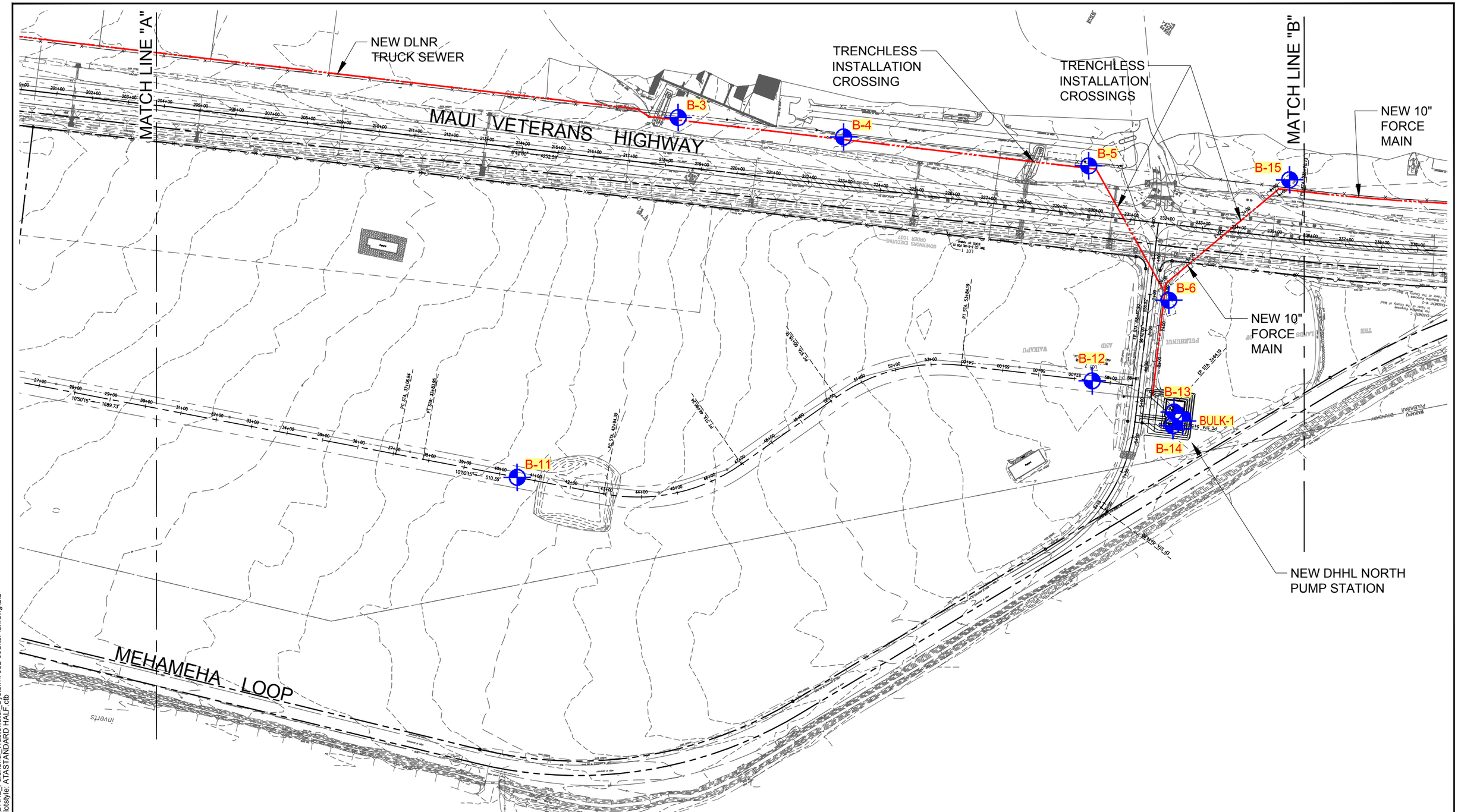

LEGEND:

APPROXIMATE BORING LOCATION

APPROXIMATE BULK SAMPLE LOCATION

REFERENCE: TOPOGRAPHIC SURVEY MAP TRANSMITTED BY AUSTIN, TSUTSUMI & ASSOCIATES, INC. DATED OCTOBER 23, 2019.

N

0 125 250 500 750 FT.

GRAPHIC SCALE

SITE PLAN

DHHL PULEHUNUI WASTEWATER SYSTEM
PULEHUNUI, MAUI, HAWAII

GEOLABS, INC.
Geotechnical Engineering

DATE	DRAWN BY	PLATE
NOVEMBER 2019	ASP / HYC	2.2
SCALE 1" = 250'	W.O. 7932-00	

CAD User: ASPASIONJR File Last Updated: November 26, 2019 11:55:05am Plot Date: November 26, 2019 - 1:13:15pm
File: T:\Drafting\Working\7932-00_DHHL_Pulehunui_Wastewater_System\7932-00SitePlan.dwg\2.2
Plotter: DWG To PDF-GEO.pc3 Plotstyle: ATASTANDARD HALF.ctb

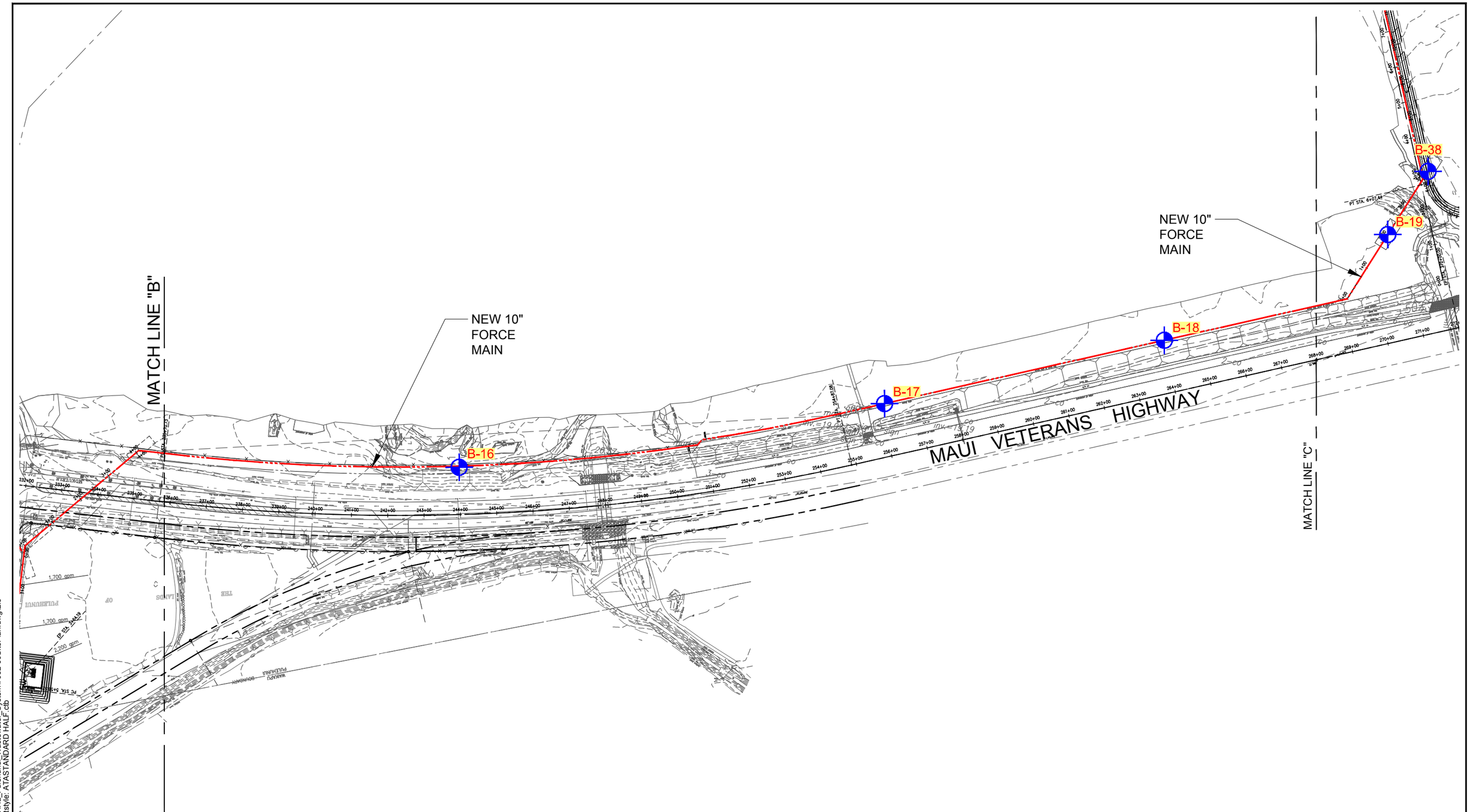

LEGEND:

APPROXIMATE BORING LOCATION

N

0 125 250 500 750 FT.

GRAPHIC SCALE

REFERENCE: TOPOGRAPHIC SURVEY MAP TRANSMITTED BY AUSTIN, TSUTSUMI & ASSOCIATES, INC. DATED OCTOBER 23, 2019.

SITE PLAN

DHHL PULEHUNUI WASTEWATER SYSTEM
PULEHUNUI, MAUI, HAWAII

GEOLABS, INC.
Geotechnical Engineering

DATE	DRAWN BY	PLATE
NOVEMBER 2019	ASP / HYC	2.3
SCALE	W.O.	
1" = 250'	7932-00	

CAD User: ASPASIONUR File Last Updated: November 26, 2019 10:37:53am Plot Date: November 26, 2019 - 10:41:32am
File: T:\Drafting\Working\7932-00_DHHL_Pulehunui_Wastewater_System\7932-00SitePlan.dwg\2.3
Plotter: DWG To PDF-GEO.pc3 Plotstyle: ATASTANDARD HALF.ctb

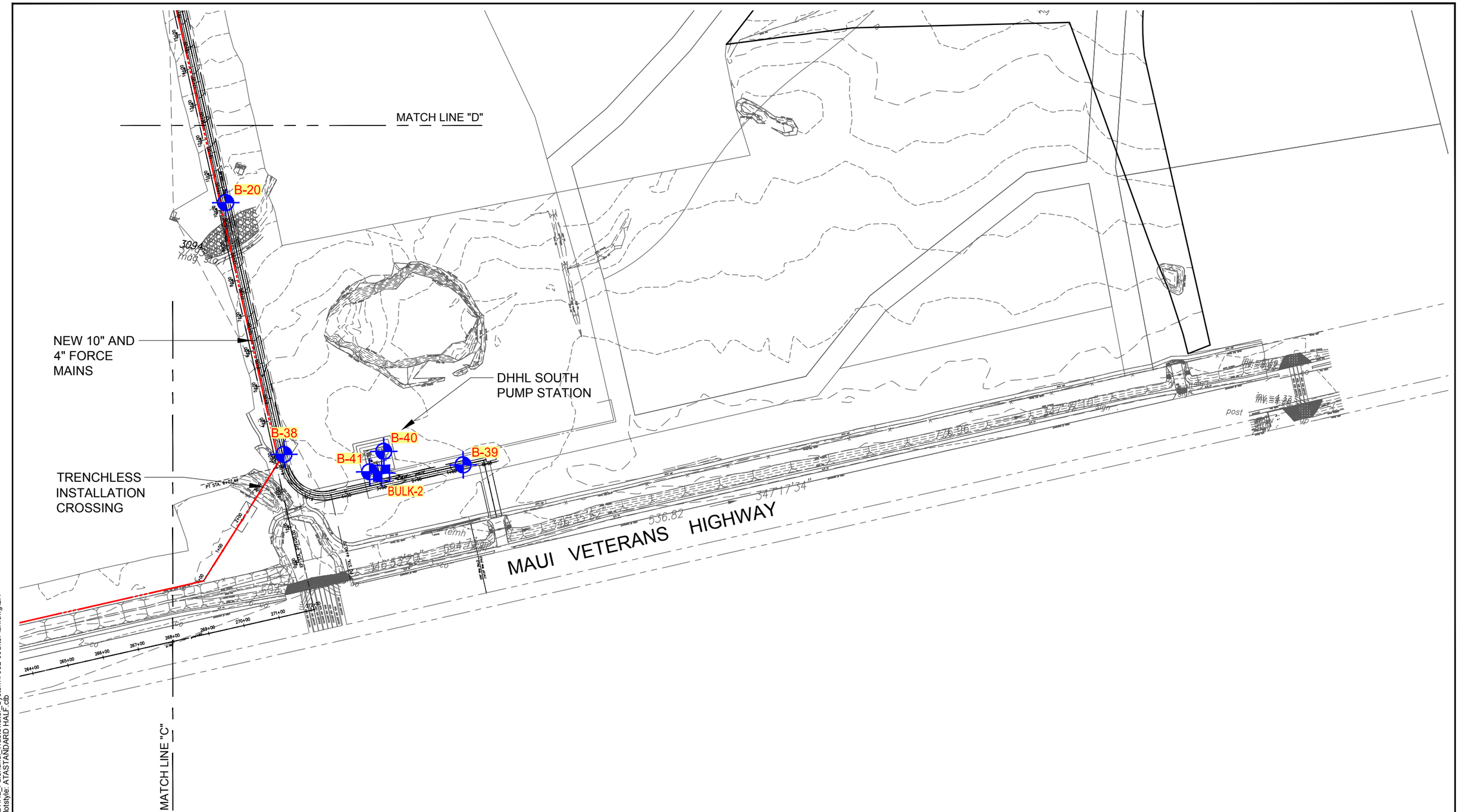

LEGEND:

APPROXIMATE BORING LOCATION

APPROXIMATE BULK SAMPLE LOCATION

REFERENCE: TOPOGRAPHIC SURVEY MAP TRANSMITTED BY AUSTIN, TSUTSUMI & ASSOCIATES, INC. DATED OCTOBER 23, 2019.

N

0 125 250 500 750 FT.

GRAPHIC SCALE

SITE PLAN

DHHL PULEHUNUI WASTEWATER SYSTEM
PULEHUNUI, MAUI, HAWAII

GEOLABS, INC.
Geotechnical Engineering

DATE	DRAWN BY	PLATE
NOVEMBER 2019	ASP / HYC	2.4
SCALE	W.O.	
1" = 250'	7932-00	

CAD User: ASPASIONJR File Last Updated: November 26, 2019 11:55:05am Plot Date: November 26, 2019 - 1:14:46pm
File: T:\Drafting\Working\7932-00_DHHL_Pulehunui_Wastewater_System\7932-00SitePlan.dwg\2.4
Plotter: DWG To PDF-GEO.pc3 Plotstyle: ATASTANDARD HALF.ctb

NEW 10" AND 4"
FORCE MAINS

NEW 10" AND 4"
FORCE MAINS

B-29

BULK-4

B-30

B-22

BULK-3

B-21

B-24

B-23

B-26

B-25

B-27

B-28

TEMPORARY
WASTEWATER
TREATMENT PLANT

MATCH LINE "E"

MATCH LINE "D"

N

LEGEND:

APPROXIMATE BORING LOCATION

APPROXIMATE BULK SAMPLE LOCATION

REFERENCE: TOPOGRAPHIC SURVEY MAP TRANSMITTED BY AUSTIN, TSUTSUMI & ASSOCIATES, INC. DATED OCTOBER 23, 2019.

0 125 250 500 750 FT.

GRAPHIC SCALE

SITE PLAN

DHHL PULEHUNUI WASTEWATER SYSTEM
PULEHUNUI, MAUI, HAWAII

GEOLABS, INC.
Geotechnical Engineering

DATE	DRAWN BY	PLATE
NOVEMBER 2019	ASP / HYC	2.5
SCALE	W.O.	
1" = 250'	7932-00	

CAD User: ASPASIONJR File Last Updated: November 26, 2019 10:37:53am Plot Date: November 26, 2019 - 10:42:40am
File: T:\Drafting\Working\7932-00_DHHL_Pulehunui_Wastewater_System\7932-00SitePlan.dwg\2.5
Plotter: DWG To PDF-GEO.pc3 Plotstyle: ATASTANDARD HALF.ctb

LEGEND:

APPROXIMATE BORING LOCATION

APPROXIMATE BULK SAMPLE LOCATION

REFERENCE: TOPOGRAPHIC SURVEY MAP TRANSMITTED BY AUSTIN, TSUTSUMI & ASSOCIATES, INC. DATED OCTOBER 23, 2019.

0 125 250 500 750 FT.

GRAPHIC SCALE

SITE PLAN

DHHL PULEHUNUI WASTEWATER SYSTEM
PULEHUNUI, MAUI, HAWAII

GEOLABS, INC.
Geotechnical Engineering

DATE	DRAWN BY	PLATE
NOVEMBER 2019	ASP / HYC	2.6
SCALE	W.O.	
1" = 250'	7932-00	

CAD User: ASPASIONJR File Last Updated: November 26, 2019 10:37:53am Plot Date: November 26, 2019 - 10:43:12am
File: T:\Drafting\Working\7932-00_DHHL_Pulehunui_Wastewater_System\7932-00SitePlan.dwg\2.6
Plotter: DWG To PDF-GEO.pc3 Plotstyle: ATASTANDARD HALF.ctb

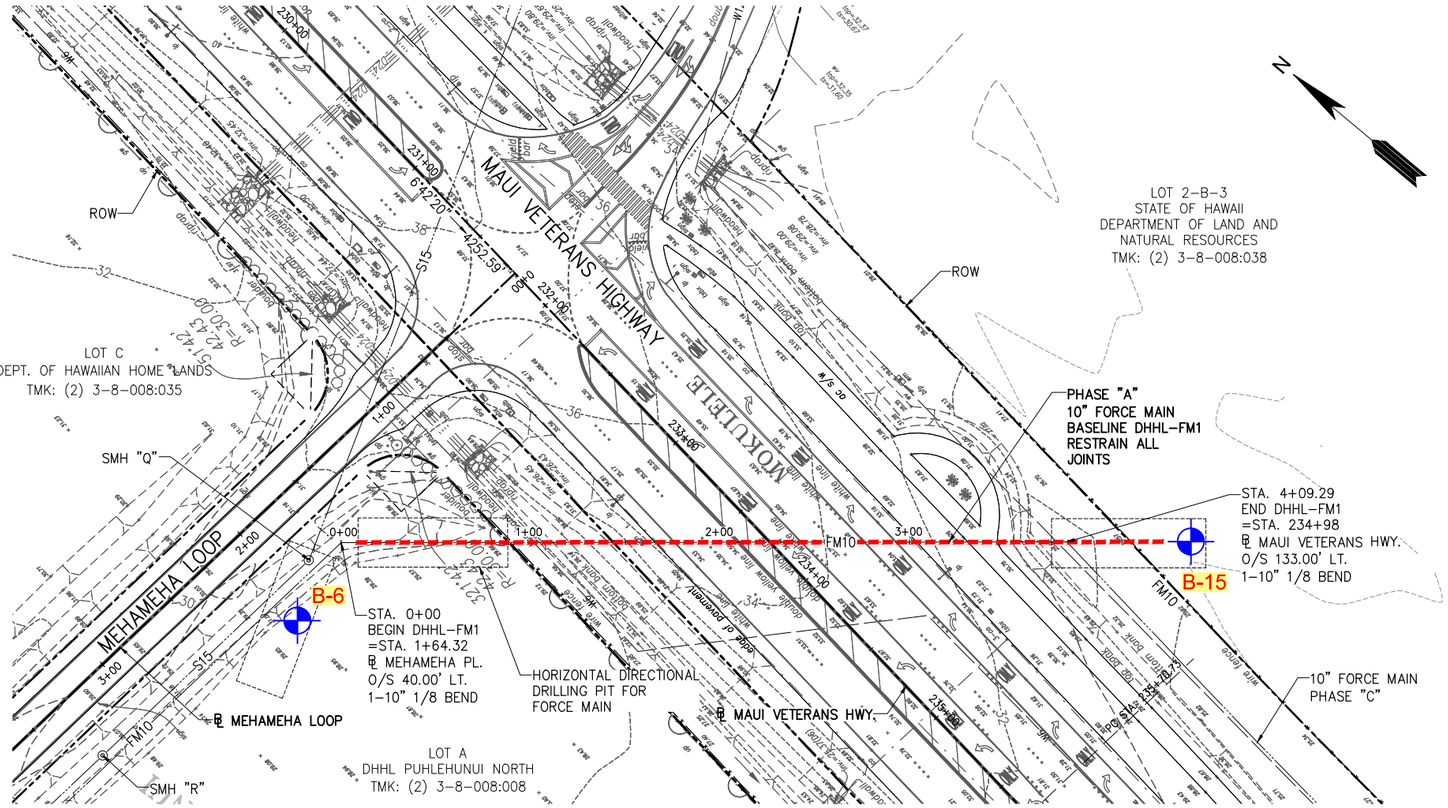

LEGEND:

- APPROXIMATE BORING LOCATION
- APPROXIMATE LOCATION OF FORCE MAIN HDD ALIGNMENT

HOR. 0 40 80 160 240 FT.
VER. 0 8 16 32 48 FT.
GRAPHIC SCALE

NOTE: THE CONDITIONS ILLUSTRATED ARE BASED ON OUR BORINGS AND GEOLOGICAL INTERPRETATIONS. WHILE THESE ARE BELIEVED TO BE GENERALLY CORRECT, THE CONDITIONS MAY VARY LOCALLY FROM THOSE INDICATED.

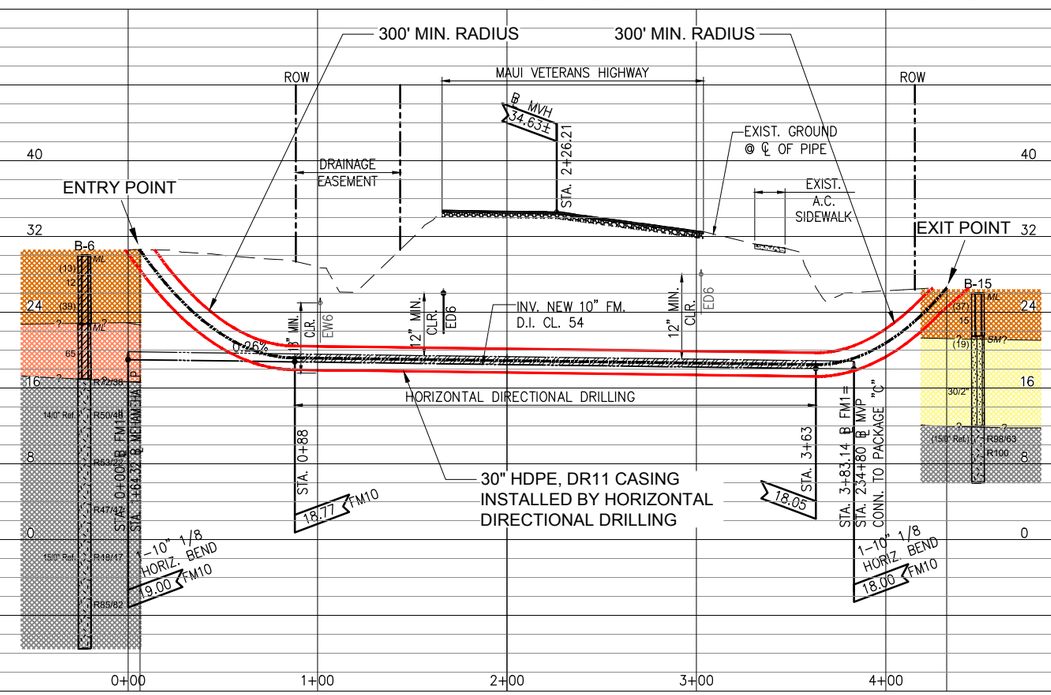

LEGEND:

- ALLUVIUM (SANDY SILT)
- ALLUVIUM (SAND)
- SAPROLITE
- BASALT

20	BLOW COUNT REQUIRED FOR 12 INCHES OF PENETRATION OF A 2-INCH O.D. STANDARD PENETRATION SAMPLER
(20)	BLOW COUNT REQUIRED FOR 12 INCHES OF PENETRATION OF A 3-INCH O.D. MODIFIED CALIFORNIA SAMPLER
R100/50	REC/RQD VALUES IN PERCENT

HDD CROSSING PLAN & PROFILE
DHHL-FM1 STA. 0+00 TO END
DHHL PULEHUNUI WASTEWATER SYSTEM
PULEHUNUI, MAUI, HAWAII

REFERENCE: PLAN AND PROFILE, DHHL-FM1 STA. 0+00 TO END TRANSMITTED BY AUSTIN, TSUTSUMI & ASSOCIATES, INC. ON OCTOBER 28, 2019.

GEOLABS, INC.
Geotechnical Engineering

DATE	DRAWN BY	PLATE
NOVEMBER 2019	HYC	3.1
SCALE HOR.: 1" = 80' VER.: 1" = 16'	W.O. 7932-00	

CAD User: HENRY File Last Updated: November 26, 2019 10:12:09am Plot Date: November 26, 2019 - 10:22:48am
File: T:\Drafting\Working\7932-00_DHHL_Pulehunui_Wastewater_System\7932-00HddCrossingPlan&Profile_FM1.dwg\3.1
Plotter: DWG To PDF-GEO.pc3 Plotstyle: ATASTANDARD HALF.ctb

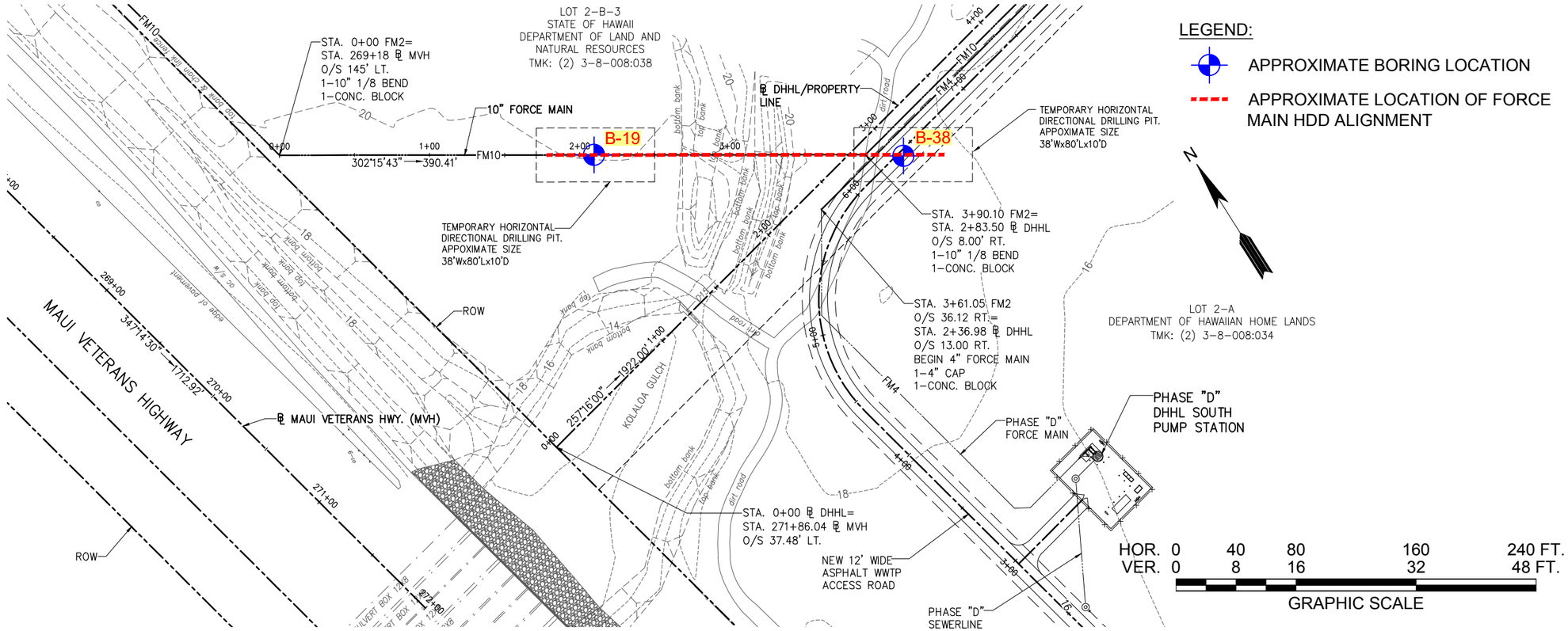

NOTE: THE CONDITIONS ILLUSTRATED ARE BASED ON OUR BORINGS AND GEOLOGICAL INTERPRETATIONS. WHILE THESE ARE BELIEVED TO BE GENERALLY CORRECT, THE CONDITIONS MAY VARY LOCALLY FROM THOSE INDICATED.

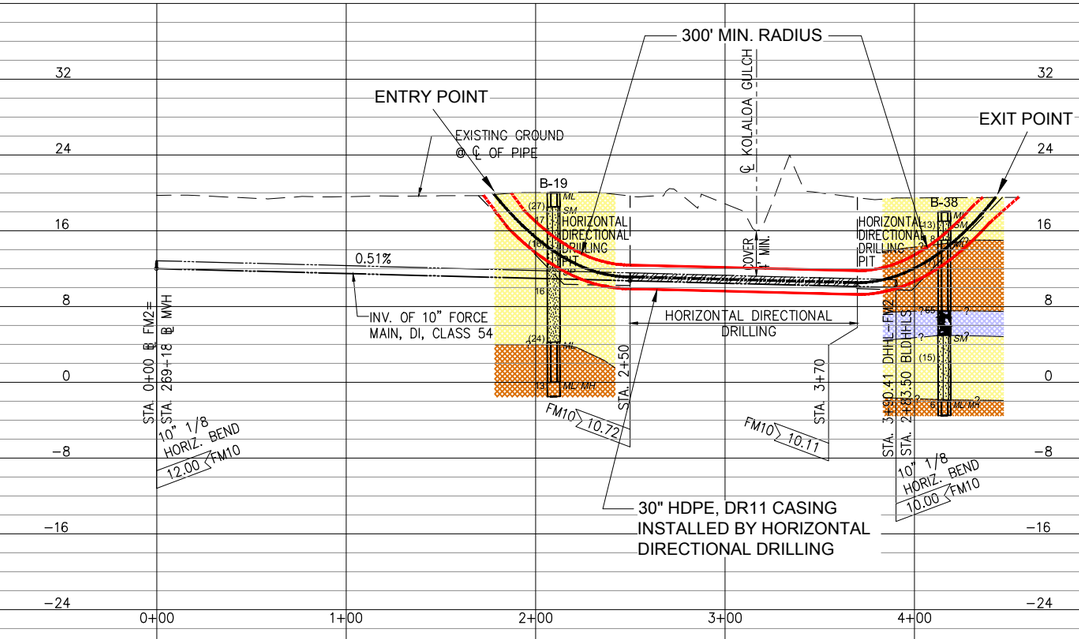

LEGEND:

- ALLUVIUM (SAND)
- ALLUVIUM (SANDY SILT)
- COBBLES

20	BLOW COUNT REQUIRED FOR 12 INCHES OF PENETRATION OF A 2-INCH O.D. STANDARD PENETRATION SAMPLER
(20)	BLOW COUNT REQUIRED FOR 12 INCHES OF PENETRATION OF A 3-INCH O.D. MODIFIED CALIFORNIA SAMPLER
R100/50	REC/RQD VALUES IN PERCENT

HDD CROSSING PLAN & PROFILE
FORCE MAIN-FM2 STA. 0+00 TO END
DHHL PULEHUNUI WASTEWATER SYSTEM
PULEHUNUI, MAUI, HAWAII

GEOLABS, INC.
Geotechnical Engineering

DATE	DRAWN BY	PLATE
NOVEMBER 2019	HYC	3.2
SCALE HOR.: 1" = 80' VER.: 1" = 16'	W.O. 7932-00	

REFERENCE: PLAN AND PROFILE, FORCE MAIN-FM2 STA. 0+00 TO END TRANSMITTED BY AUSTIN, TSUTSUMI & ASSOCIATES, INC. ON OCTOBER 28, 2019.

CAD User: HENRY File Last Updated: November 26, 2019 10:16:17am Plot Date: November 26, 2019 - 10:25:47am
File: T:\Drafting\Working\7932-00_DHHL_Pulehunui_Wastewater_System\7932-00HddCrossingPlan&Profile_FM2.dwg\3.2
Plotter: DWG To PDF-GEO.pc3 Plotstyle: ATASTANDARD HALF.ctb

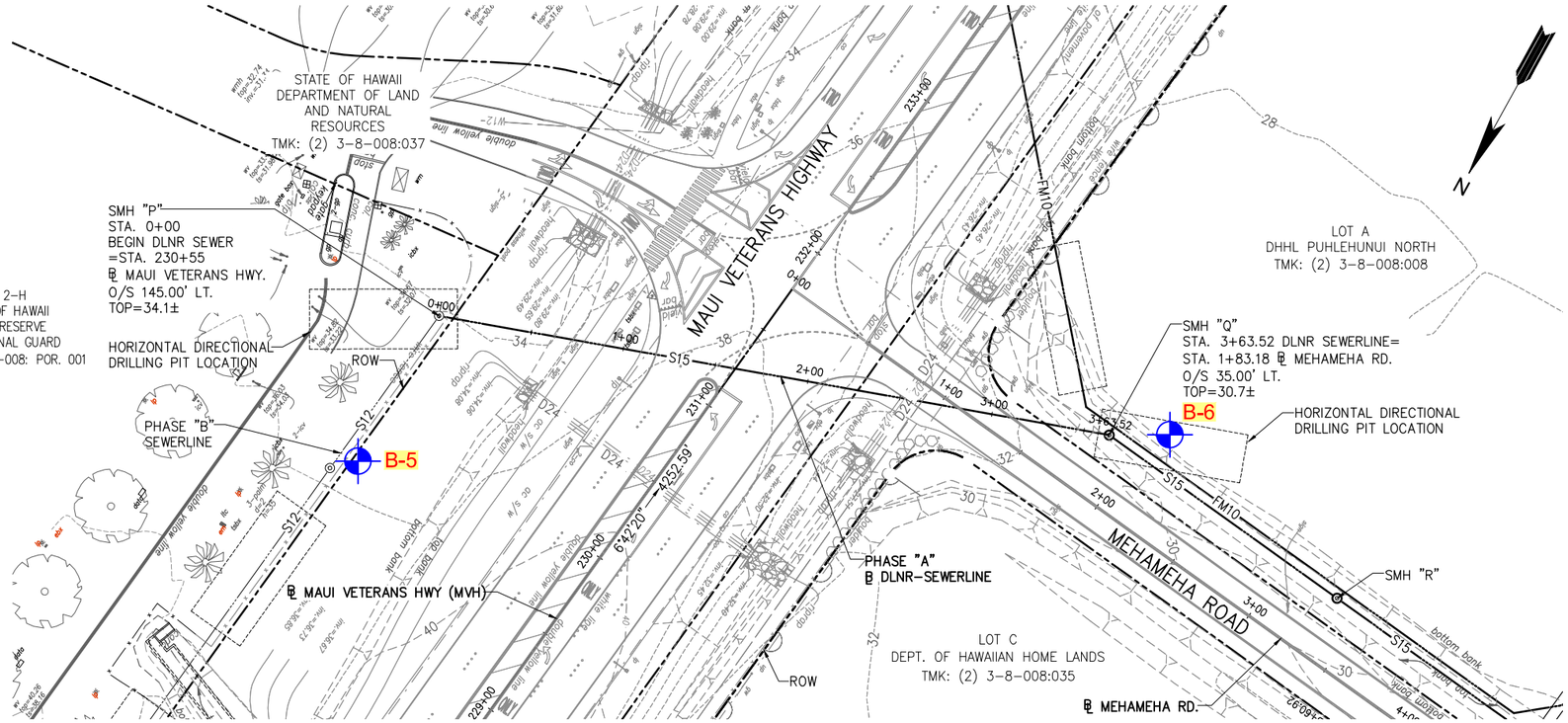

LEGEND:

APPROXIMATE BORING LOCATION

HOR. 0 40 80 160 240 FT.
VER. 0 8 16 32 48 FT.

GRAPHIC SCALE

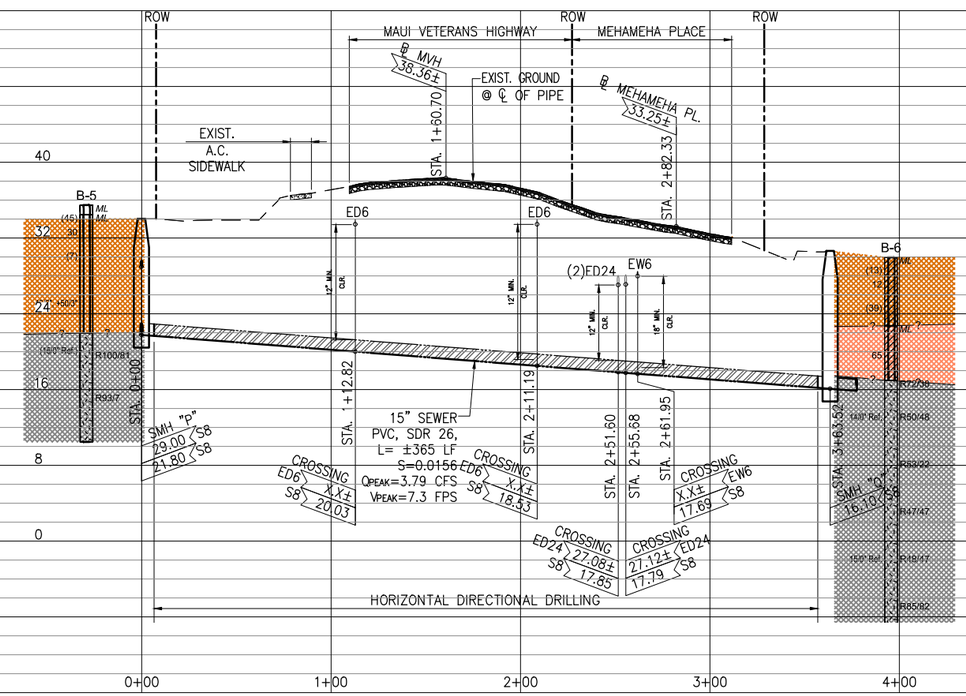

LEGEND:

ALLUVIUM (SANDY SILT)

SAPROLITE

BASALT

20	BLOW COUNT REQUIRED FOR 12 INCHES OF PENETRATION OF A 2-INCH O.D. STANDARD PENETRATION SAMPLER
(20)	BLOW COUNT REQUIRED FOR 12 INCHES OF PENETRATION OF A 3-INCH O.D. MODIFIED CALIFORNIA SAMPLER
R100/50	REC/RQD VALUES IN PERCENT

PTMT CROSSING PLAN & PROFILE
DLNR SEWER STA. 0+00 TO END
DHHL PULEHUNUI WASTEWATER SYSTEM
PULEHUNUI, MAUI, HAWAII

GEOLABS, INC.
Geotechnical Engineering

DATE	DRAWN BY	PLATE
NOVEMBER 2019	HYC	3.3
SCALE HOR.: 1" = 80' VER.: 1" = 16'	W.O. 7932-00	

REFERENCE: PLAN AND PROFILE, DLNR SEWER STA. 0+00 TO END TRANSMITTED BY AUSTIN, TSUTSUMI & ASSOCIATES, INC. ON OCTOBER 28, 2019.

CAD User: HENRY File Last Updated: November 26, 2019 10:19:21am Plot Date: November 26, 2019 - 10:27:31am
File: T:\Drafting\Working\7932-00_DHHL_Pulehunui_Wastewater_System\7932-00Plan&Profile_DLNR_1.dwg\3.3
Plotter: DWG To PDF-GEO.pc3 Plotstyle: ATASTANDARD HALF.ctb

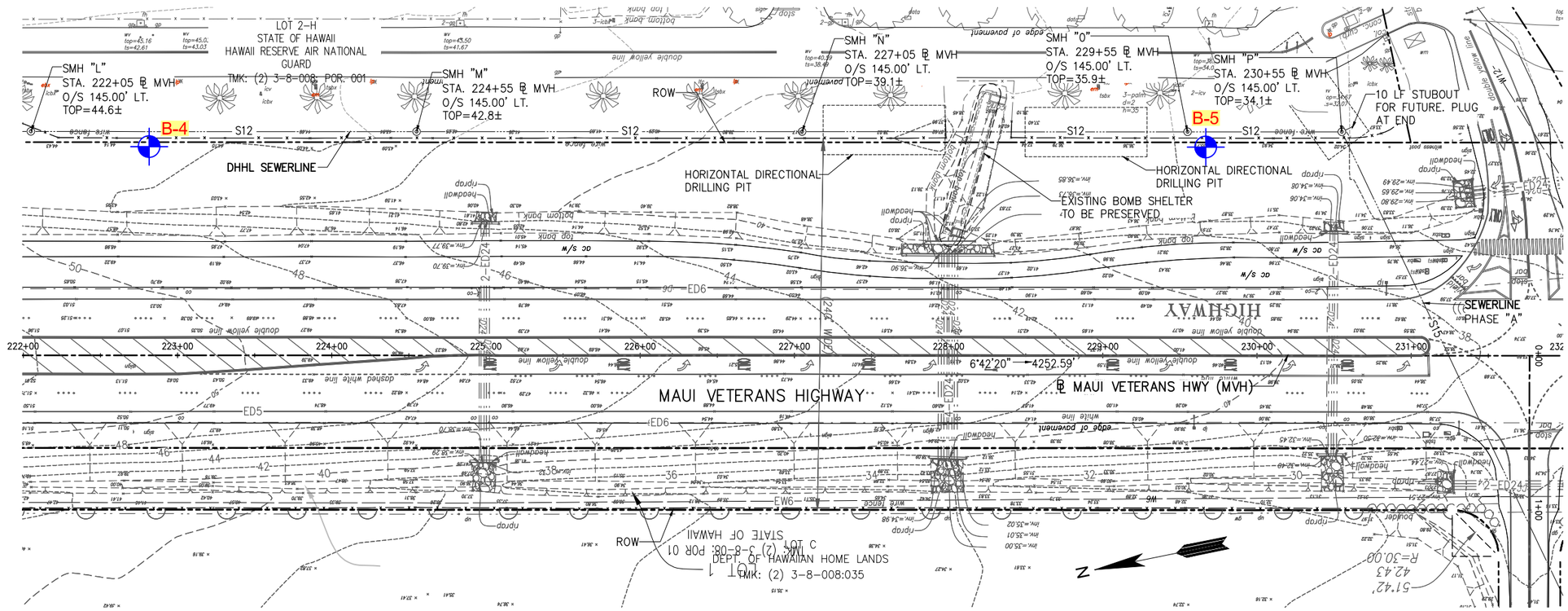

LEGEND:

APPROXIMATE BORING LOCATION

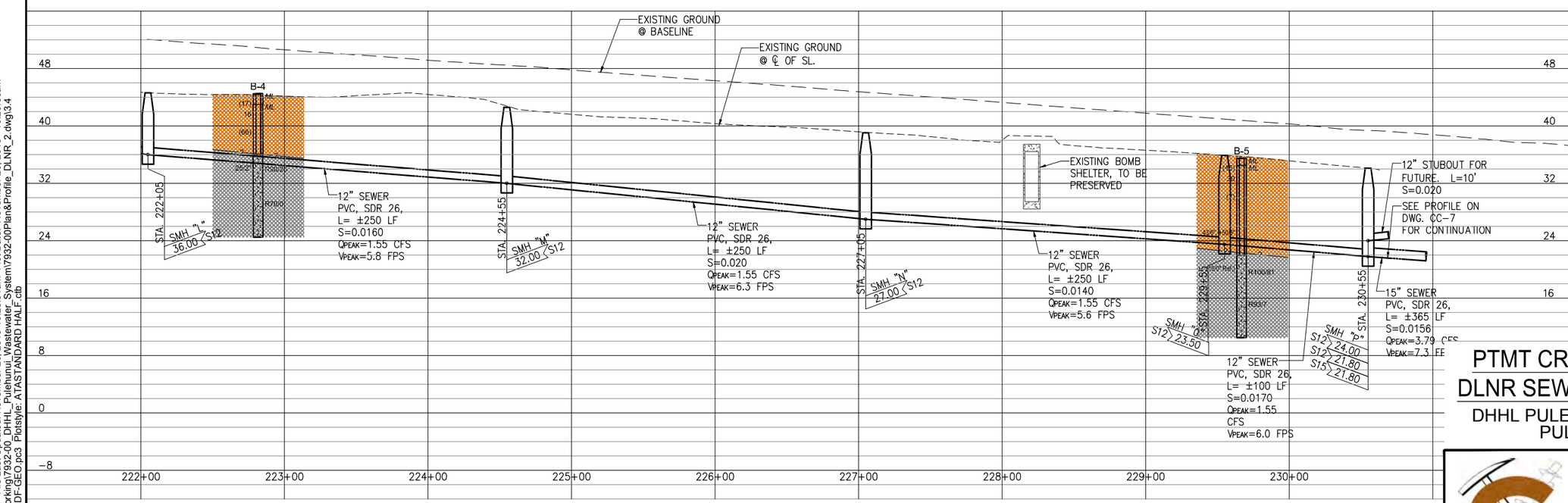

LEGEND:

- ALLUVIUM (SANDY SILT)
- BASALT
- 20 — BLOW COUNT REQUIRED FOR 12 INCHES OF PENETRATION OF A 2-INCH O.D. STANDARD PENETRATION SAMPLER
- (20) — BLOW COUNT REQUIRED FOR 12 INCHES OF PENETRATION OF A 3-INCH O.D. MODIFIED CALIFORNIA SAMPLER
- R100/50 — REC/RQD VALUES IN PERCENT

HOR. 0 40 80 160 240 FT.
VER. 0 8 16 32 48 FT.
GRAPHIC SCALE

REFERENCE: PLAN AND PROFILE, DLNR SEWER STA. 222+00 TO 232+00 TRANSMITTED BY AUSTIN, TSUTSUMI & ASSOCIATES, INC. ON OCTOBER 28, 2019.

PTMT CROSSING PLAN & PROFILE
DLNR SEWER STA. 222+00 TO 232+00
DHHL PULEHUNUI WASTEWATER SYSTEM
PULEHUNUI, MAUI, HAWAII

GEOLABS, INC.
Geotechnical Engineering

DATE	DRAWN BY	PLATE
NOVEMBER 2019	HYC	3.4
SCALE HOR.: 1" = 80' VER.: 1" = 16'	W.O. 7932-00	

CAD User: HENRY File Last Updated: November 26, 2019 10:28:51am Plot Date: November 26, 2019 - 10:29:35am
File: T:\Drafting\Working\7932-00_DHHL_Pulehunui_Wastewater_System\7932-00Plan&Profile_DLNR_2.dwg\3.4
Plotter: DWG To PDF-GEO.pc3 Plotstyle: ATASTANDARD HALF.ctb

APPENDIX A

APPENDIX A

Field Exploration

We explored the subsurface conditions at the project site by drilling and sampling 41 borings, designated as Boring Nos. 1 through 41, extending to depths of about 10 to 53 feet below the existing ground surface. In addition, six bulk samples of the near-surface soils, designated as Bulk-1 through Bulk-6, were obtained to evaluate the pavement support characteristics of the near-surface soils. The approximate boring and bulk sample locations are shown on the Site Plans, Plates 2.1 through 2.6. The borings were drilled using a truck-mounted drill rig with continuous flight augers and coring tools.

Our geologists classified the materials encountered in the borings by visual and textural examination in the field in general accordance with ASTM D2488, Standard Practice for Description and Identification of Soils, and monitored the drilling operations on a near-continuous (full-time) basis. These classifications were further reviewed visually and by testing in the laboratory. Soils were classified in general accordance with ASTM D2487, Standard Practice for Classification of Soils for Engineering Purposes (Unified Soil Classification System), as shown on the Soil Log Legend, Plate A-0.1. Deviations made to the soil classification in accordance with ASTM D2487 are described on the Soil Classification Log Key, Plate A-0.2. Graphic representations of the materials encountered are presented on the Logs of Borings, Plates A-1 through A-41.2.

Relatively “undisturbed” soil samples were obtained in general accordance with ASTM D3550, Ring-Lined Barrel Sampling of Soils, by driving a 3-inch OD Modified California sampler with a 140-pound hammer falling 30 inches. In addition, some samples were obtained from the drilled borings in general accordance with ASTM D1586, Penetration Test and Split-Barrel Sampling of Soils, by driving a 2-inch OD standard penetration sampler using the same hammer and drop. The blow counts needed to drive the sampler the second and third 6 inches of an 18-inch drive are shown as the “Penetration Resistance” on the Logs of Borings at the appropriate sample depths. The penetration resistance shown on the Logs of Borings indicates the number of blows required for the specific sampler type used. The blow counts may need to be factored to obtain the Standard Penetration Test (SPT) blow counts.

Core samples of the rock materials encountered at the project site were obtained by using diamond core drilling techniques in general accordance with ASTM D2113, Diamond Core Drilling for Site Investigation. Core drilling is a rotary drilling method that uses a hollow bit to cut into the rock formation. The rock material left in the hollow core of the bit is mechanically recovered for examination and description. Rock cores were described in general accordance with the Rock Description System, as shown on the Rock Log Legend, Plate A-0.3. The Rock Description System is based on the publication “Suggested Methods for the Quantitative Description of Discontinuities in Rock Masses” by the International Society for Rock Mechanics (March 1977).

Recovery (REC) is used as a subjective guide to the interpretation of the relative quality of rock masses. Recovery is defined as the actual length of material recovered from

a coring attempt versus the length of the core attempt. For example, if 3.7 feet of material is recovered from a 5.0-foot core run, the recovery would be 74 percent and would be shown on the Logs of Borings as REC = 74%.

The Rock Quality Designation (RQD) is also a subjective guide to the relative quality of rock masses. RQD is defined as the percentage of the core run in rock that is sound material in excess of 4 inches in length without discontinuities, discounting drilling induced fractures or breaks. If 2.5 feet of sound material is recovered from a 5.0-foot core run in rock, the RQD would be 50 percent and would be shown on the Logs of Borings as RQD = 50%. It should be noted that RQD does not apply to coral material. However, the RQD values of the coral material are included in the boring logs for rough characterization of the coral material. Generally, the following is used to describe the relative quality of the rock, based on the "Practical Handbook of Physical Properties of Rocks and Minerals."

Rock Quality	**RQD** (%)
Very Poor	0 – 25
Poor	25 – 50
Fair	50 – 75
Good	75 – 90
Excellent	90 – 100

The rippability of a rock mass is a function of the relative hardness of the rock, its relative quality, brittleness, and fissile characteristics. A dense basalt with a high RQD value would be very difficult to rip and would probably require more arduous methods of excavation.

GEOLABS, INC.

Geotechnical Engineering

Soil Log Legend

UNIFIED SOIL CLASSIFICATION SYSTEM (USCS)

MAJOR DIVISIONS			USCS	TYPICAL DESCRIPTIONS
COARSE-GRAINED SOILS MORE THAN 50% OF MATERIAL RETAINED ON NO. 200 SIEVE	GRAVELS MORE THAN 50% OF COARSE FRACTION RETAINED ON NO. 4 SIEVE	CLEAN GRAVELS LESS THAN 5% FINES	GW	WELL-GRADED GRAVELS, GRAVEL-SAND MIXTURES, LITTLE OR NO FINES
			GP	POORLY-GRADED GRAVELS, GRAVEL-SAND MIXTURES, LITTLE OR NO FINES
		GRAVELS WITH FINES MORE THAN 12% FINES	GM	SILTY GRAVELS, GRAVEL-SAND-SILT MIXTURES
			GC	CLAYEY GRAVELS, GRAVEL-SAND-CLAY MIXTURES
	SANDS 50% OR MORE OF COARSE FRACTION PASSING THROUGH NO. 4 SIEVE	CLEAN SANDS LESS THAN 5% FINES	SW	WELL-GRADED SANDS, GRAVELLY SANDS, LITTLE OR NO FINES
			SP	POORLY-GRADED SANDS, GRAVELLY SANDS, LITTLE OR NO FINES
		SANDS WITH FINES MORE THAN 12% FINES	SM	SILTY SANDS, SAND-SILT MIXTURES
			SC	CLAYEY SANDS, SAND-CLAY MIXTURES
FINE-GRAINED SOILS 50% OR MORE OF MATERIAL PASSING THROUGH NO. 200 SIEVE	SILTS AND CLAYS	LIQUID LIMIT LESS THAN 50	ML	INORGANIC SILTS AND VERY FINE SANDS, ROCK FLOUR, SILTY OR CLAYEY FINE SANDS OR CLAYEY SILTS WITH SLIGHT PLASTICITY
			CL	INORGANIC CLAYS OF LOW TO MEDIUM PLASTICITY, GRAVELLY CLAYS, SANDY CLAYS, SILTY CLAYS, LEAN CLAYS
			OL	ORGANIC SILTS AND ORGANIC SILTY CLAYS OF LOW PLASTICITY
	SILTS AND CLAYS	LIQUID LIMIT 50 OR MORE	MH	INORGANIC SILT, MICACEOUS OR DIATOMACEOUS FINE SAND OR SILTY SOILS
			CH	INORGANIC CLAYS OF HIGH PLASTICITY
			OH	ORGANIC CLAYS OF MEDIUM TO HIGH PLASTICITY, ORGANIC SILTS
HIGHLY ORGANIC SOILS			PT	PEAT, HUMUS, SWAMP SOILS WITH HIGH ORGANIC CONTENTS

NOTE: DUAL SYMBOLS ARE USED TO INDICATE BORDERLINE SOIL CLASSIFICATIONS

LEGEND

- (2-INCH) O.D. STANDARD PENETRATION TEST
- (3-INCH) O.D. MODIFIED CALIFORNIA SAMPLE
- SHELBY TUBE SAMPLE
- GRAB SAMPLE
- CORE SAMPLE
- WATER LEVEL OBSERVED IN BORING AT TIME OF DRILLING
- WATER LEVEL OBSERVED IN BORING AFTER DRILLING
- WATER LEVEL OBSERVED IN BORING OVERNIGHT

LL	LIQUID LIMIT (NP=NON-PLASTIC)
PI	PLASTICITY INDEX (NP=NON-PLASTIC)
TV	TORVANE SHEAR (tsf)
UC	UNCONFINED COMPRESSION OR UNIAXIAL COMPRESSIVE STRENGTH
TXUU	UNCONSOLIDATED UNDRAINED TRIAXIAL COMPRESSION (ksf)

Plate

A-0.1

GEOLABS, INC.

Geotechnical Engineering

Soil Classification Log Key

(with deviations from ASTM D2488)

GEOLABS, INC. CLASSIFICATION*

GRANULAR SOIL (- #200 <50%)

- **PRIMARY** constituents are composed of the largest percent of the soil mass. Primary constituents are capitalized and bold (i.e., **GRAVEL, SAND**)
- **SECONDARY** constituents are composed of a percentage less than the primary constituent. If the soil mass consists of 12 percent or more fines content, a cohesive constituent is used (**SILTY** or **CLAYEY**); otherwise, a granular constituent is used (**GRAVELLY** or **SANDY**) provided that the secondary constituent consists of 20 percent or more of the soil mass. Secondary constituents are capitalized and bold (i.e., **SANDY** GRAVEL, **CLAYEY** SAND) and precede the primary constituent.
- **accessory descriptions** compose of the following:
  with some: >12%
  with a little: 5 - 12%
  with traces of: <5%
  accessory descriptions are lower cased and follow the Primary and Secondary Constituents
  (i.e., SILTY GRAVEL **with a little sand**)

COHESIVE SOIL (- #200 ≥ 50%)

- **PRIMARY** constituents are based on plasticity. Primary constituents are capitalized and bold (i.e., **CLAY, SILT**)
- **SECONDARY** constituents are composed of a percentage less than the primary constituent, but more than 20 percent of the soil mass. Secondary constituents are capitalized and bold (i.e., **SANDY** CLAY, **SILTY** CLAY, **CLAYEY** SILT) and precede the primary constituent.
- **accessory descriptions** compose of the following:
  with some: >12%
  with a little: 5 - 12%
  with traces of: <5%
  accessory descriptions are lower cased and follow the Primary and Secondary Constituents
  (i.e., SILTY CLAY **with some sand**)

EXAMPLE: Soil Containing 60% Gravel, 25% Sand, 15% Fines. Described as: **SILTY GRAVEL** with some sand

RELATIVE DENSITY / CONSISTENCY

Granular Soils			Cohesive Soils			
N-Value (Blows/Foot)		Relative Density	N-Value (Blows/Foot)		PP Readings (tsf)	Consistency
SPT	MCS		SPT	MCS		
0 - 4	0 - 7	Very Loose	0 - 2	0 - 4		Very Soft
4 - 10	7 - 18	Loose	2 - 4	4 - 7	< 0.5	Soft
10 - 30	18 - 55	Medium Dense	4 - 8	7 - 15	0.5 - 1.0	Medium Stiff
30 - 50	55 - 91	Dense	8 - 15	15 - 27	1.0 - 2.0	Stiff
> 50	> 91	Very Dense	15 - 30	27 - 55	2.0 - 4.0	Very Stiff
			> 30	> 55	> 4.0	Hard

MOISTURE CONTENT DEFINITIONS

Dry: Absence of moisture, dry to the touch

Moist: Damp but no visible water

Wet: Visible free water

ABBREVIATIONS

WOH: Weight of Hammer

WOR: Weight of Drill Rods

SPT: Standard Penetration Test Split-Spoon Sampler

MCS: Modified California Sampler

PP: Pocket Penetrometer

GRAIN SIZE DEFINITION

Description	Sieve Number and / or Size
Boulders	> 12 inches (305-mm)
Cobbles	3 to 12 inches (75-mm to 305-mm)
Gravel	3-inch to #4 (75-mm to 4.75-mm)
Coarse Gravel	3-inch to 3/4-inch (75-mm to 19-mm)
Fine Gravel	3/4-inch to #4 (19-mm to 4.75-mm)
Sand	#4 to #200 (4.75-mm to 0.075-mm)
Coarse Sand	#4 to #10 (4.75-mm to 2-mm)
Medium Sand	#10 to #40 (2-mm to 0.425-mm)
Fine Sand	#40 to #200 (0.425-mm to 0.075-mm)

**Soil descriptions are based on ASTM D2488-09a, Visual-Manual Procedure, with the above modifications by Geolabs, Inc. to the Unified Soil Classification System (USCS).*

Plate

A-0.2

GEOLABS, INC.

Geotechnical Engineering

Rock Log Legend

ROCK DESCRIPTIONS

	BASALT		**CONGLOMERATE**
	BOULDERS		**LIMESTONE**
	BRECCIA		**SANDSTONE**
	CLINKER		**SILTSTONE**
	COBBLES		**TUFF**
	CORAL		**VOID/CAVITY**

ROCK DESCRIPTION SYSTEM

ROCK FRACTURE CHARACTERISTICS

The following terms describe general fracture spacing of a rock:

Massive: Greater than 24 inches apart

Slightly Fractured: 12 to 24 inches apart

Moderately Fractured: 6 to 12 inches apart

Closely Fractured: 3 to 6 inches apart

Severely Fractured: Less than 3 inches apart

DEGREE OF WEATHERING

The following terms describe the chemical weathering of a rock:

Unweathered: Rock shows no sign of discoloration or loss of strength.

Slightly Weathered: Slight discoloration inwards from open fractures.

Moderately Weathered: Discoloration throughout and noticeably weakened though not able to break by hand.

Highly Weathered: Most minerals decomposed with some corestones present in residual soil mass. Can be broken by hand.

Extremely Weathered: Saprolite. Mineral residue completely decomposed to soil but fabric and structure preserved.

HARDNESS

The following terms describe the resistance of a rock to indentation or scratching:

Very Hard: Specimen breaks with difficulty after several "pinging" hammer blows.
Example: Dense, fine grain volcanic rock

Hard: Specimen breaks with some difficulty after several hammer blows.
Example: Vesicular, vugular, coarse-grained rock

Medium Hard: Specimen can be broked by one hammer blow. Cannot be scraped by knife. SPT may penetrate by ~25 blows per inch with bounce.
Example: Porous rock such as clinker, cinder, and coral reef

Soft: Can be indented by one hammer blow. Can be scraped or peeled by knife. SPT can penetrate by ~100 blows per foot.
Example: Weathered rock, chalk-like coral reef

Very Soft: Crumbles under hammer blow. Can be peeled and carved by knife. Can be indented by finger pressure.
Example: Saprolite

LOG LEGEND FOR ROCK 7932-00.GPJ GEOLABS.GDT 11/14/19

GEOLABS, INC. Geotechnical Engineering	DHHL PULEHUNUI WASTEWATER SYSTEM PULEHUNUI, MAUI, HAWAII	Log of Boring 1

Approximate Ground Surface Elevation (feet MSL): 82 *

Laboratory: Other Tests	Laboratory: Moisture Content (%)	Laboratory: Dry Density (pcf)	Field: Core Recovery (%)	Field: RQD (%)	Field: Penetration Resistance (blows/foot)	Field: Pocket Pen. (tsf)	Depth (feet)	USCS	Description
	12	90			42	3.5		ML	Brown **SANDY SILT**, very stiff, dry (alluvium)
	14				20			MH	Reddish brown **CLAYEY SILT** with some sand, very stiff, moist (alluvium)
	25	76			53	1.5	5		
LL=47 PI=17	18				41		10	ML	Grayish brown **SANDY SILT**, hard, moist (alluvium)
			98	22	15/0" Ref.		15		Gray **BASALT**, closely to moderately fractured, slightly weathered, medium hard (basalt formation)
							20		Boring terminated at 20 feet * Elevations estimated from Topographic Survey Map transmitted by Austin, Tsutsumi & Associates, Inc. on October 23, 2019.
							25		
							30		
							35		

Date Started:	July 2, 2019	Water Level:	Not Encountered
Date Completed:	July 2, 2019		
Logged By:	B. Aiu	Drill Rig:	CME-45C TRUCK
Total Depth:	20 feet	Drilling Method:	4" Solid-Stem Auger & PQ Coring
Work Order:	7932-00	Driving Energy:	140 lb. wt., 30 in. drop

Plate

A - 1

GEOLABS, INC. Geotechnical Engineering	DHHL PULEHUNUI WASTEWATER SYSTEM PULEHUNUI, MAUI, HAWAII	Log of Boring 2

Approximate Ground Surface Elevation (feet MSL): 72 *

Laboratory: Other Tests	Laboratory: Moisture Content (%)	Laboratory: Dry Density (pcf)	Field: Core Recovery (%)	Field: RQD (%)	Field: Penetration Resistance (blows/foot)	Field: Pocket Pen. (tsf)	Depth (feet)	USCS	Description
								ML	Brown **SANDY SILT**, medium stiff, dry (alluvium)
LL=NP PI=NP	7				23	2.0			
	14				15				
	19	75			30/2" Ref.		5	SM	Reddish brown **SILTY SAND** with a little gravel (basaltic), very dense, moist (alluvium) grades with some boulders at 5.5 feet
	23				25/2" Ref.	2.5	10		
			97	28	25/2" Ref.		15		Gray **BASALT**, closely to moderately fractured, slightly weathered, medium hard (basalt formation)
							20		Boring terminated at 20 feet
							25		
							30		
							35		

Date Started:	July 2, 2019	Water Level:	Not Encountered
Date Completed:	July 2, 2019		
Logged By:	B. Aiu	Drill Rig:	CME-45C TRUCK
Total Depth:	20 feet	Drilling Method:	4" Solid-Stem Auger & PQ Coring
Work Order:	7932-00	Driving Energy:	140 lb. wt., 30 in. drop

Plate

A - 2

GEOLABS, INC. Geotechnical Engineering	DHHL PULEHUNUI WASTEWATER SYSTEM PULEHUNUI, MAUI, HAWAII	Log of Boring 3

Approximate Ground Surface Elevation (feet MSL): 53 *

Laboratory: Other Tests	Laboratory: Moisture Content (%)	Laboratory: Dry Density (pcf)	Field: Core Recovery (%)	Field: RQD (%)	Field: Penetration Resistance (blows/foot)	Field: Pocket Pen. (tsf)	Depth (feet)	USCS	Description
	6	87			25	2.0		ML	Brown **SANDY SILT**, stiff, dry (fill)
	50				20			ML	Reddish brown **SANDY SILT** with a little gravel (basaltic), very stiff, moist (alluvium)
	25	76			40	1.5	5		grades with more gravel
	18		98	69	25/1" Ref.		10		Gray vugular **BASALT**, moderately fractured, slightly weathered, hard (basalt formation)
			95	68			15		
							20		Boring terminated at 20 feet
							25		
							30		
							35		

Date Started:	July 9, 2019	Water Level:	Not Encountered
Date Completed:	July 9, 2019		
Logged By:	B. Aiu	Drill Rig:	CME-45C TRUCK
Total Depth:	20 feet	Drilling Method:	4" Solid-Stem Auger & HQ Coring
Work Order:	7932-00	Driving Energy:	140 lb. wt., 30 in. drop

Plate

A - 3

GEOLABS, INC. Geotechnical Engineering	DHHL PULEHUNUI WASTEWATER SYSTEM PULEHUNUI, MAUI, HAWAII	Log of Boring 4

Approximate Ground Surface Elevation (feet MSL): 44.5 *

Laboratory			Field								Description
Other Tests	Moisture Content (%)	Dry Density (pcf)	Core Recovery (%)	RQD (%)	Penetration Resistance (blows/foot)	Pocket Pen. (tsf)	Depth (feet)	Sample	Graphic	USCS	
										ML	Brown **SANDY SILT**, dry (fill)
	20	98			17	1.5				ML	Reddish brown **SANDY SILT** with a little gravel (basaltic), very stiff, moist (alluvium)
	17				16						
	19	75			66	4.0	5				grades to hard
	23		98	26	25/2" Ref.		10				Gray vugular **BASALT**, moderately fractured, slightly weathered, hard (basalt formation)
UC= 7700 psi			70	0			15				grades to closely fractured
							20				Boring terminated at 20 feet
							25				
							30				
							35				

Date Started:	July 8, 2019	Water Level:	Not Encountered
Date Completed:	July 8, 2019		
Logged By:	B. Aiu	Drill Rig:	CME-45C TRUCK
Total Depth:	20 feet	Drilling Method:	4" Solid-Stem Auger & HQ Coring
Work Order:	7932-00	Driving Energy:	140 lb. wt., 30 in. drop

Plate

A - 4

GEOLABS, INC.

Geotechnical Engineering

DHHL PULEHUNUI WASTEWATER SYSTEM
PULEHUNUI, MAUI, HAWAII

Log of Boring

5

Approximate Ground Surface Elevation (feet MSL): 35.5 *

Laboratory: Other Tests	Laboratory: Moisture Content (%)	Laboratory: Dry Density (pcf)	Field: Core Recovery (%)	Field: RQD (%)	Field: Penetration Resistance (blows/foot)	Field: Pocket Pen. (tsf)	Depth (feet)	Sample	Graphic	USCS	Description
										ML	Brown **SANDY SILT**, medium stiff, dry (fill)
Direct Shear	7	94			45	3.0				ML	Reddish brown **SANDY SILT (BASALTIC)**, very stiff to hard, moist (alluvium)
	50				30						
LL=39 PI=3	22	83			7	2.5	5				grades to medium stiff locally
	15				43/6" +50/3" Ref.		10				grades to hard
											Gray vugular **BASALT**, moderately fractured, slightly weathered, hard (basalt formation)
			100	81	15/0" Ref.		15				
UC= 4460 psi											
			93	7			20				grades to closely fractured
							25				Boring terminated at 25 feet
							30				
							35				

Date Started:	July 8, 2019	Water Level:	Not Encountered
Date Completed:	July 8, 2019		
Logged By:	B. Aiu	Drill Rig:	CME-45C TRUCK
Total Depth:	25 feet	Drilling Method:	4" Solid-Stem Auger & HQ Coring
Work Order:	7932-00	Driving Energy:	140 lb. wt., 30 in. drop

Plate

A - 5

GEOLABS, INC. Geotechnical Engineering	DHHL PULEHUNUI WASTEWATER SYSTEM PULEHUNUI, MAUI, HAWAII	Log of Boring 6

Approximate Ground Surface Elevation (feet MSL): 30 *

Laboratory: Other Tests	Laboratory: Moisture Content (%)	Laboratory: Dry Density (pcf)	Field: Core Recovery (%)	Field: RQD (%)	Field: Penetration Resistance (blows/foot)	Field: Pocket Pen. (tsf)	Depth (feet)	USCS	Description
								ML	Light brown to brownish red **SANDY SILT** with some gravel (basaltic), medium stiff, moist (alluvium)
	15	74			13	2.0			
	18				12				grades to stiff
	16	85			39	4.0	5		grades to very stiff
								ML	Reddish brown **SILT** with some sand and traces of gravel, hard, moist (saprolite)
Sieve - #200 = 70.7%	17				65		10		
UC= 5700 psi			72	38			15		Dark gray **BASALT**, severely to moderately fractured, slightly to moderately weathered, medium hard to hard (basalt formation)
			50	48	14/0" Ref.				
UC= 6030 psi			53	22			20		
			47	47			25		grades to massive locally
			48	47	15/0" Ref.		30		
							35		

Date Started:	July 16, 2019	Water Level: ▽	Not Encountered
Date Completed:	July 16, 2019		
Logged By:	K. Gerstnecker	Drill Rig:	CME-45C TRUCK
Total Depth:	41.5 feet	Drilling Method:	4" Solid-Stem Auger & PQ Coring
Work Order:	7932-00	Driving Energy:	140 lb. wt., 30 in. drop

Plate

A - 6.1

GEOLABS, INC. Geotechnical Engineering	DHHL PULEHUNUI WASTEWATER SYSTEM PULEHUNUI, MAUI, HAWAII	Log of Boring 6

Laboratory			Field								
Other Tests	Moisture Content (%)	Dry Density (pcf)	Core Recovery (%)	RQD (%)	Penetration Resistance (blows/foot)	Pocket Pen. (tsf)	Depth (feet)	Sample	Graphic	USCS	(Continued from previous plate) Description
			85	82							grades to massive
							40				
											Boring terminated at 41.5 feet
							45				
							50				
							55				
							60				
							65				
							70				

Date Started:	July 16, 2019	Water Level: ▽	Not Encountered	Plate
Date Completed:	July 16, 2019			
Logged By:	K. Gerstnecker	Drill Rig:	CME-45C TRUCK	
Total Depth:	41.5 feet	Drilling Method:	4" Solid-Stem Auger & PQ Coring	A - 6.2
Work Order:	7932-00	Driving Energy:	140 lb. wt., 30 in. drop	

GEOLABS, INC. Geotechnical Engineering	DHHL PULEHUNUI WASTEWATER SYSTEM PULEHUNUI, MAUI, HAWAII	Log of Boring 7

Approximate Ground Surface Elevation (feet MSL): 81 *

Laboratory: Other Tests	Laboratory: Moisture Content (%)	Laboratory: Dry Density (pcf)	Field: Core Recovery (%)	Field: RQD (%)	Field: Penetration Resistance (blows/foot)	Field: Pocket Pen. (tsf)	Depth (feet)	USCS	Description
								ML	Brown **SANDY SILT**, dry (fill)
	17	81			40	2.5		CL	Reddish brown **SILTY CLAY**, very stiff to hard, moist (alluvium)
LL=43 PI=18	17				50				
	14	80			36	4.0	5	SM	Reddish brown **SILTY SAND** with traces of gravel (basaltic), medium dense, moist (alluvium)
									grades with some cobbles
Sieve - #200 = 41.5%	21				74		10		grades to very dense
			100	63	25/1" Ref.		15		Gray **BASALT**, closely to moderately fractured, slightly to moderately weathered, hard (basalt formation)
							20		Boring terminated at 20 feet
							25		
							30		
							35		

Date Started:	July 9, 2019	Water Level:	Not Encountered
Date Completed:	July 9, 2019		
Logged By:	B. Aiu	Drill Rig:	CME-45C TRUCK
Total Depth:	20 feet	Drilling Method:	4" Solid-Stem Auger & HQ Coring
Work Order:	7932-00	Driving Energy:	140 lb. wt., 30 in. drop

Plate

A - 7

GEOLABS, INC. Geotechnical Engineering	DHHL PULEHUNUI WASTEWATER SYSTEM PULEHUNUI, MAUI, HAWAII	Log of Boring 8

Approximate Ground Surface Elevation (feet MSL): 79 *

Other Tests (Laboratory)	Moisture Content (%) (Laboratory)	Dry Density (pcf) (Laboratory)	Core Recovery (%) (Field)	RQD (%) (Field)	Penetration Resistance (blows/foot) (Field)	Pocket Pen. (tsf) (Field)	Depth (feet)	Sample	Graphic	USCS	Description
										ML	Brown **SANDY SILT**, dry (fill)
	18	83			30/6" +25/1" Ref.	2.5				ML	Reddish brown **SANDY SILT** with some gravel, hard, moist (alluvium)
	9				41						
			97	50	15/0" Ref.		5				Gray **COBBLES AND BOULDERS (BASALTIC)** (alluvium)
UC= 6350 psi											Gray **BASALT**, moderately fractured, slightly weathered, hard (basalt formation)
			97	35			10				grades to vugular, severely fractured
											grades to slightly fractured
UC= 4670 psi			100	50			15				
UC= 9020 psi											
											grades to moderately fractured
			100	40			20				
UC= 3020 psi							25				Boring terminated at 25 feet
							30				
							35				

Date Started:	July 10, 2019	Water Level:	Not Encountered
Date Completed:	July 10, 2019		
Logged By:	B. Aiu	Drill Rig:	CME-45C TRUCK
Total Depth:	25 feet	Drilling Method:	4" Solid-Stem Auger & HQ Coring
Work Order:	7932-00	Driving Energy:	140 lb. wt., 30 in. drop

Plate

A - 8

GEOLABS, INC. Geotechnical Engineering	DHHL PULEHUNUI WASTEWATER SYSTEM PULEHUNUI, MAUI, HAWAII	Log of Boring 9

Approximate Ground Surface Elevation (feet MSL): 67.5 *

Laboratory: Other Tests	Laboratory: Moisture Content (%)	Laboratory: Dry Density (pcf)	Field: Core Recovery (%)	Field: RQD (%)	Field: Penetration Resistance (blows/foot)	Field: Pocket Pen. (tsf)	Depth (feet)	Sample	Graphic	USCS	Description
										ML	Brown **SANDY SILT**, dry (fill)
	18	83			36	1.8				ML	Reddish brown **SANDY SILT** with some gravel, very stiff, moist (alluvium)
	17				28						
	23	82			42	2.0	5				
			100	48							Gray vugular **BASALT**, moderately fractured, slightly weathered, hard (basalt formation)
UC= 9850 psi											
UC= 5610 psi			98	7			10				grades to closely to severely fractured
			92	50			15				
UC= 2980 psi											
			95	67			20				
UC= 10500 psi							25				Boring terminated at 25 feet
							30				
							35				

Date Started:	July 10, 2019	Water Level:	Not Encountered
Date Completed:	July 10, 2019		
Logged By:	B. Aiu	Drill Rig:	CME-45C TRUCK
Total Depth:	25 feet	Drilling Method:	4" Solid-Stem Auger & HQ Coring
Work Order:	7932-00	Driving Energy:	140 lb. wt., 30 in. drop

Plate

A - 9

GEOLABS, INC. Geotechnical Engineering	DHHL PULEHUNUI WASTEWATER SYSTEM PULEHUNUI, MAUI, HAWAII	Log of Boring 10

Approximate Ground Surface Elevation (feet MSL): 62.5 *

Laboratory: Other Tests	Laboratory: Moisture Content (%)	Laboratory: Dry Density (pcf)	Field: Core Recovery (%)	Field: RQD (%)	Field: Penetration Resistance (blows/foot)	Field: Pocket Pen. (tsf)	Depth (feet)	USCS	Description
								ML	Brown **SANDY SILT**, dry (fill)
	9	74			22	2.0		ML	Brownish gray **GRAVELLY SILT** with some sand, very stiff, dry (alluvium)
	3				20				grades with some cobbles
Sieve - #200 = 8.0%	12				19		5	SW-SM	Dark brownish gray **SAND (BASALTIC)** with a little silt and gravel (basaltic), medium dense, moist (alluvium)
			64						
			7		25/6" Ref.		10		grades with more gravel, very dense
			104	7	15/0" Ref.		15		Gray vesicular **BASALT**, closely to severely fractured, moderately weathered, medium hard (basalt formation)
			92	60			20		grades to moderately fractured
UC= 3610 psi			100	20			25		
UC= 3920 psi									
							30		Boring terminated at 30 feet
							35		

Date Started:	July 10, 2019	Water Level:	Not Encountered
Date Completed:	July 11, 2019		
Logged By:	B. Aiu	Drill Rig:	CME-45C TRUCK
Total Depth:	30 feet	Drilling Method:	4" Solid-Stem Auger & PQ Coring
Work Order:	7932-00	Driving Energy:	140 lb. wt., 30 in. drop

Plate

A - 10

GEOLABS, INC. Geotechnical Engineering	DHHL PULEHUNUI WASTEWATER SYSTEM PULEHUNUI, MAUI, HAWAII	Log of Boring 11

Approximate Ground Surface Elevation (feet MSL): 53 *

Other Tests (Laboratory)	Moisture Content (%) (Laboratory)	Dry Density (pcf) (Laboratory)	Core Recovery (%) (Field)	RQD (%) (Field)	Penetration Resistance (blows/foot) (Field)	Pocket Pen. (tsf) (Field)	Depth (feet)	Sample	Graphic	USCS	Description
	9	83			58	2.0				ML	Dark brown **SANDY SILT** with some gravel (basaltic), hard, moist (alluvium)
	6				28						grades to very stiff
LL=42 PI=10 Direct Shear	19	72			14	3.0	5				grades to medium stiff
										MH	Dark brown **CLAYEY SILT** with some highly weathered gravel, very stiff, moist (alluvium)
	17				21		10				grades to brownish red
	19	102			52	2.0	15				
	27				23/6" +10/0" Ref.		20				
											Light gray **BOULDERS (BASALTIC)**, moderately weathered (alluvium)
										MH	Dark brownish red **CLAYEY SILT**, moist (alluvium)
	15	72			22/6" +10/0" Ref.	4.0	25				Dark gray vesicular **BASALT**, slightly weathered, hard (basalt formation)
											Boring terminated at 26 feet
							30				
							35				

Date Started:	July 15, 2019	Water Level: ▽	Not Encountered	Plate
Date Completed:	July 15, 2019			
Logged By:	K. Gerstnecker	Drill Rig:	CME-45C TRUCK	
Total Depth:	26 feet	Drilling Method:	4" Solid-Stem Auger & PQ Coring	A - 11
Work Order:	7932-00	Driving Energy:	140 lb. wt., 30 in. drop	

GEOLABS, INC. Geotechnical Engineering	DHHL PULEHUNUI WASTEWATER SYSTEM PULEHUNUI, MAUI, HAWAII	Log of Boring 12

Approximate Ground Surface Elevation (feet MSL): 31.5 *

Laboratory: Other Tests	Laboratory: Moisture Content (%)	Laboratory: Dry Density (pcf)	Field: Core Recovery (%)	Field: RQD (%)	Field: Penetration Resistance (blows/foot)	Field: Pocket Pen. (tsf)	Depth (feet)	USCS	Description
	10	78			12	4.0		ML	Light brown **SANDY SILT** with some gravel (basaltic), medium stiff, moist (alluvium)
	12				8				
LL=41 PI=11	17	71			17	4.5	5		grades to stiff
	10				28		10	SM	Light grayish brown **SILTY SAND (BASALTIC)**, medium dense, moist (alluvium)
Sieve - #200 = 16.0%	13	103			20	4.5	15		grades with some gravel
			36	14				GP	Dark grayish brown **GRAVEL (BASALTIC)** with some sand (basaltic), moist (alluvium)
UC= 6150 psi			99	90	14/0" Ref.		20		Dark gray vesicular **BASALT**, closely fractured to massive, slightly weathered, hard to very hard (basalt formation)
					15/0" Ref.		25		Boring terminated at 25 feet
							30		
							35		

Date Started:	July 15, 2019	Water Level: ▽	Not Encountered
Date Completed:	July 15, 2019		
Logged By:	K. Gerstnecker	Drill Rig:	CME-45C TRUCK
Total Depth:	25 feet	Drilling Method:	4" Solid-Stem Auger & PQ Coring
Work Order:	7932-00	Driving Energy:	140 lb. wt., 30 in. drop

Plate

A - 12

GEOLABS, INC. Geotechnical Engineering	DHHL PULEHUNUI WASTEWATER SYSTEM PULEHUNUI, MAUI, HAWAII	Log of Boring 13

Approximate Ground Surface Elevation (feet MSL): 29.5 *

Laboratory: Other Tests	Laboratory: Moisture Content (%)	Laboratory: Dry Density (pcf)	Field: Core Recovery (%)	Field: RQD (%)	Field: Penetration Resistance (blows/foot)	Field: Pocket Pen. (tsf)	Depth (feet)	USCS	Description
	12	73			12	3.0		ML	Light brown **SANDY SILT** with some gravel (basaltic), medium stiff, moist (alluvium)
	13				4				
LL=39 PI=6 Direct Shear	14	72			8	3.0	5		
Sieve - #200 = 7.0%	4				32		10	SW-SM	Dark grayish brown **GRAVELLY SAND (BASALTIC)** with a little silt, dense, moist (alluvium)
			14				15	MH	Dark reddish brown **CLAYEY SILT** with some weathered gravel and cobbles (basaltic), hard, moist (alluvium)
	29		93	100	10/0" Ref.				Dark gray **BASALT**, closely fractured to massive, slightly weathered, hard (basalt formation)
UC= 5720 psi			98	80			20		
UC= 4140 psi			100	73			25		
UC= 3720 psi							30		
UC= 6790 psi			77	53			35		

Date Started:	July 16, 2019	Water Level:	20.0 ft. 07/16/2019 1336 HRS
Date Completed:	July 16, 2019		
Logged By:	K. Gerstnecker	Drill Rig:	CME-45C TRUCK
Total Depth:	41.5 feet	Drilling Method:	4" Solid-Stem Auger & PQ Coring
Work Order:	7932-00	Driving Energy:	140 lb. wt., 30 in. drop

Plate

A - 13.1

GEOLABS, INC. Geotechnical Engineering	DHHL PULEHUNUI WASTEWATER SYSTEM PULEHUNUI, MAUI, HAWAII	Log of Boring 13

Laboratory			Field								
Other Tests	Moisture Content (%)	Dry Density (pcf)	Core Recovery (%)	RQD (%)	Penetration Resistance (blows/foot)	Pocket Pen. (tsf)	Depth (feet)	Sample	Graphic	USCS	(Continued from previous plate) Description
			52	52			40				
											Boring terminated at 41.5 feet
							45				
							50				
							55				
							60				
							65				
							70				

Date Started:	July 16, 2019	Water Level:	20.0 ft. 07/16/2019 1336 HRS	Plate
Date Completed:	July 16, 2019			
Logged By:	K. Gerstnecker	Drill Rig:	CME-45C TRUCK	
Total Depth:	41.5 feet	Drilling Method:	4" Solid-Stem Auger & PQ Coring	A - 13.2
Work Order:	7932-00	Driving Energy:	140 lb. wt., 30 in. drop	

GEOLABS, INC.

Geotechnical Engineering

DHHL PULEHUNUI WASTEWATER SYSTEM
PULEHUNUI, MAUI, HAWAII

Log of Boring

14

Approximate Ground Surface Elevation (feet MSL): 30 *

Laboratory: Other Tests	Laboratory: Moisture Content (%)	Laboratory: Dry Density (pcf)	Field: Core Recovery (%)	Field: RQD (%)	Field: Penetration Resistance (blows/foot)	Field: Pocket Pen. (tsf)	Depth (feet)	USCS	Description
	9	83			13	1.5		ML	Light brown **SANDY SILT** with some gravel (basaltic), medium stiff, moist (alluvium)
	11				5				
Direct Shear	14	76			10	1.5	5		
	5				18		10	SM	Dark grayish brown **SILTY SAND (CORALLINE)** with some gravel (basaltic), medium dense, moist (alluvium)
			0					GW	Dark gray **GRAVEL (BASALTIC)** with some sand, traces of silt, and some cobbles and boulders (basaltic), very dense, moist (alluvium)
Sieve - #200 = 0.3%	5	102	23	0	44/6" +12/0" Ref.	4.0	15		
							20		Dark gray vesicular **BASALT**, closely fractured to massive, slightly weathered, medium hard to hard (basalt formation)
UC= 5200 psi			83	58	15/0" Ref.				
UC= 8490 psi			97	82			25		
UC= 5910 psi			98	97			30		
							35		

Date Started:	July 17, 2019	Water Level: ▽ 30.0 ft. 07/17/2019 1145 HRS	Plate
Date Completed:	July 17, 2019		
Logged By:	K. Gerstnecker	Drill Rig: CME-45C TRUCK	
Total Depth:	53 feet	Drilling Method: 4" Solid-Stem Auger & PQ Coring	A - 14.1
Work Order:	7932-00	Driving Energy: 140 lb. wt., 30 in. drop	

GEOLABS, INC. Geotechnical Engineering	DHHL PULEHUNUI WASTEWATER SYSTEM PULEHUNUI, MAUI, HAWAII	Log of Boring 14

Laboratory			Field								
Other Tests	Moisture Content (%)	Dry Density (pcf)	Core Recovery (%)	RQD (%)	Penetration Resistance (blows/foot)	Pocket Pen. (tsf)	Depth (feet)	Sample	Graphic	USCS	(Continued from previous plate) Description
UC= 7380 psi			98	65							
							40				
			97	97							
UC= 7540 psi							45				
			82	32							Dark brownish red **BASALT**, severely to moderately fractured, highly weathered, soft to medium hard (basalt formation)
							50				
	19				71						
											Boring terminated at 53 feet
							55				
							60				
							65				
							70				

Date Started:	July 17, 2019	Water Level: ▽	30.0 ft. 07/17/2019 1145 HRS	Plate
Date Completed:	July 17, 2019			
Logged By:	K. Gerstnecker	Drill Rig:	CME-45C TRUCK	
Total Depth:	53 feet	Drilling Method:	4" Solid-Stem Auger & PQ Coring	A - 14.2
Work Order:	7932-00	Driving Energy:	140 lb. wt., 30 in. drop	

GEOLABS, INC. Geotechnical Engineering	DHHL PULEHUNUI WASTEWATER SYSTEM PULEHUNUI, MAUI, HAWAII	Log of Boring 15

Approximate Ground Surface Elevation (feet MSL): 26 *

Laboratory: Other Tests	Laboratory: Moisture Content (%)	Laboratory: Dry Density (pcf)	Field: Core Recovery (%)	Field: RQD (%)	Field: Penetration Resistance (blows/foot)	Field: Pocket Pen. (tsf)	Depth (feet)	USCS	Description
								ML	Dark brown **GRAVELLY SILT**, very stiff, dry (alluvium)
LL=41 PI=4	6	100			37				
	9				15				
							5	SP-SM	Dark gray with orangish brown **SAND (BASALTIC)** with a little silt and gravel (basaltic), medium dense, dry (alluvium)
Direct Shear Sieve - #200 = 7.5%	7	91			19				
									grades with some cobbles
	9				30/2" Ref.		10		grades to very dense
							15		Gray **BASALT**, closely to moderately fractured, slightly weathered, medium hard (basalt formation)
UC= 6780 psi			98	63	15/0" Ref.				
			100	100					
							20		Boring terminated at 20 feet
							25		
							30		
							35		

Date Started:	July 1, 2019	Water Level:	Not Encountered
Date Completed:	July 1, 2019		
Logged By:	B. Aiu	Drill Rig:	CME-45C TRUCK
Total Depth:	20 feet	Drilling Method:	4" Solid-Stem Auger & PQ Coring
Work Order:	7932-00	Driving Energy:	140 lb. wt., 30 in. drop

Plate

A - 15

GEOLABS, INC. Geotechnical Engineering	DHHL PULEHUNUI WASTEWATER SYSTEM PULEHUNUI, MAUI, HAWAII	Log of Boring 16

Approximate Ground Surface Elevation (feet MSL): 13 *

Laboratory: Other Tests	Laboratory: Moisture Content (%)	Laboratory: Dry Density (pcf)	Field: Core Recovery (%)	Field: RQD (%)	Field: Penetration Resistance (blows/foot)	Field: Pocket Pen. (tsf)	Depth (feet)	Sample	Graphic	USCS	Description
	8	95			27					ML	Light reddish brown **SANDY SILT** with some gravel (basaltic), stiff, dry (alluvium)
	10				11						
	3	80			12		5				grades to medium stiff
										SM	Dark gray **SILTY SAND (BASALTIC)** with some gravel (basaltic), loose, moist (alluvium)
										CL	Dark brownish red **SANDY CLAY** with some gravel (basaltic), hard, moist (alluvium)
LL=41 PI=18	16				33		10				
										CH	Dark brownish red **SILTY CLAY**, hard, moist (alluvium)
										MH	Dark brownish red **CLAYEY SILT**, very stiff, moist (alluvium)
	20	87			49		15				
	21				55/3" Ref.		20				grades to hard
											Boring terminated at 20.8 feet
							25				
							30				
							35				

Date Started:	July 17, 2019	Water Level:	Not Encountered
Date Completed:	July 17, 2019		
Logged By:	K. Gerstnecker	Drill Rig:	CME-45C TRUCK
Total Depth:	20.8 feet	Drilling Method:	4" Solid-Stem Auger & PQ Coring
Work Order:	7932-00	Driving Energy:	140 lb. wt., 30 in. drop

Plate

A - 16

GEOLABS, INC. Geotechnical Engineering	DHHL PULEHUNUI WASTEWATER SYSTEM PULEHUNUI, MAUI, HAWAII	Log of Boring 17

Approximate Ground Surface Elevation (feet MSL): 25 *

Laboratory: Other Tests	Laboratory: Moisture Content (%)	Laboratory: Dry Density (pcf)	Field: Core Recovery (%)	Field: RQD (%)	Field: Penetration Resistance (blows/foot)	Field: Pocket Pen. (tsf)	Depth (feet)	Sample	Graphic	USCS	Description
	9	88			27					ML	Dark brown **SANDY SILT**, stiff, dry (alluvium)
	4				15					SM	Dark gray with orangish brown mottling **SILTY SAND (BASALTIC)**, medium dense, dry (alluvium) grades to loose
	8	87			17		5				
	26				10		10			ML	Brown **SANDY SILT**, stiff, dry (alluvium)
	10	70			15		15			SM	Dark gray with orangish brown **SILTY SAND (BASALTIC)**, loose, dry (alluvium)
	9				13		20			MH	Brown **CLAYEY SILT** with a little sand (basaltic), stiff, moist (alluvium)
											Boring terminated at 21.5 feet
							25				
							30				
							35				

Date Started:	July 1, 2019	Water Level:	Not Encountered
Date Completed:	July 1, 2019		
Logged By:	B. Aiu	Drill Rig:	CME-45C TRUCK
Total Depth:	21.5 feet	Drilling Method:	4" Solid-Stem Auger
Work Order:	7932-00	Driving Energy:	140 lb. wt., 30 in. drop

Plate

A - 17

GEOLABS, INC. Geotechnical Engineering	DHHL PULEHUNUI WASTEWATER SYSTEM PULEHUNUI, MAUI, HAWAII	Log of Boring 18

Approximate Ground Surface Elevation (feet MSL): 20.5 *

Laboratory: Other Tests	Laboratory: Moisture Content (%)	Laboratory: Dry Density (pcf)	Field: Core Recovery (%)	Field: RQD (%)	Field: Penetration Resistance (blows/foot)	Field: Pocket Pen. (tsf)	Depth (feet)	Sample	Graphic	USCS	Description
										MH	Reddish brown **CLAYEY SILT** with some sand, moist (alluvium)
	8	89			36					ML	Dark brown **SANDY SILT**, very stiff, dry (alluvium)
					25						
	21	67			17		5			SM	Dark gray with orangish brown mottling **SILTY SAND (BASALTIC)**, loose, dry (alluvium)
											Gray **GRAVELLY COBBLES (BASALTIC)**, very dense (alluvium)
	7				19		10			ML	Brown **SANDY SILT**, very stiff, dry (alluvium)
	14	89			63		15				grades to hard
										GP	Gray **SANDY GRAVEL (BASALTIC)**, dense, dry (alluvium)
	3				36		20				
											Boring terminated at 21.5 feet
							25				
							30				
							35				

Date Started:	July 1, 2019	Water Level:	Not Encountered
Date Completed:	July 1, 2019		
Logged By:	B. Aiu	Drill Rig:	CME-45C TRUCK
Total Depth:	21.5 feet	Drilling Method:	4" Solid-Stem Auger
Work Order:	7932-00	Driving Energy:	140 lb. wt., 30 in. drop

Plate

A - 18

GEOLABS, INC. Geotechnical Engineering	DHHL PULEHUNUI WASTEWATER SYSTEM PULEHUNUI, MAUI, HAWAII	Log of Boring 19

Approximate Ground Surface Elevation (feet MSL): 20 *

Laboratory: Other Tests	Laboratory: Moisture Content (%)	Laboratory: Dry Density (pcf)	Field: Core Recovery (%)	Field: RQD (%)	Field: Penetration Resistance (blows/foot)	Field: Pocket Pen. (tsf)	Depth (feet)	Sample	Graphic	USCS	Description
										ML	Reddish brown **SANDY SILT** with some fine gravel, stiff, dry (alluvium)
	6	89			27					SW-SM	Grayish brown **SAND** with a little silt and some fine gravel, medium dense, dry (alluvium)
	5				17						
Sieve - #200 = 8.2%	4	108			16		5				grades to loose
										SP-SM	Gray **SAND (BASALTIC)** with a little silt, medium dense, dry (alluvium)
Sieve - #200 = 5.6%	3				16		10				
	35	71			24	3.0	15			ML	Brown **SANDY SILT** with a little fine gravel, stiff, moist (alluvium)
	28				13		20			MH	Reddish brown **CLAYEY SILT** with a little sand, stiff, moist (alluvium)
											Boring terminated at 21.5 feet
							25				
							30				
							35				

Date Started:	June 18, 2019	Water Level:	Not Encountered
Date Completed:	June 18, 2019		
Logged By:	D. Gremminger	Drill Rig:	CME-45C TRUCK
Total Depth:	21.5 feet	Drilling Method:	4" Solid-Stem Auger
Work Order:	7932-00	Driving Energy:	140 lb. wt., 30 in. drop

Plate

A - 19

GEOLABS, INC. Geotechnical Engineering	DHHL PULEHUNUI WASTEWATER SYSTEM PULEHUNUI, MAUI, HAWAII	Log of Boring 20

Approximate Ground Surface Elevation (feet MSL): 34 *

Laboratory: Other Tests	Laboratory: Moisture Content (%)	Laboratory: Dry Density (pcf)	Field: Core Recovery (%)	Field: RQD (%)	Field: Penetration Resistance (blows/foot)	Field: Pocket Pen. (tsf)	Depth (feet)	Sample	Graphic	USCS	Description
	18	78			28	4.5				MH	Brown **CLAYEY SILT** with some sand and a little fine gravel, dry (alluvium)
	20				23					MH	Brown with multi-colored mottling **CLAYEY SILT** with some sand and fine gravel, very stiff, dry (residual soil)
			45	45	20/1" Ref.		5				Gray **BASALT**, closely to moderately fractured, slightly to moderately weathered, hard to very hard (basalt formation)
UC= 8300 psi			100	90							
			100	100			10				grades to moderately fractured to massive
			83	100			15				
	10				8		20			GP	Reddish gray **SANDY GRAVEL (BASALTIC)**, loose, moist (clinker)
											Boring terminated at 22.5 feet
							25				
							30				
							35				

Date Started:	June 20, 2019	Water Level:	Not Encountered
Date Completed:	June 20, 2019		
Logged By:	D. Gremminger	Drill Rig:	CME-45C TRUCK
Total Depth:	22.5 feet	Drilling Method:	4" Solid-Stem Auger & PQ Coring
Work Order:	7932-00	Driving Energy:	140 lb. wt., 30 in. drop

Plate

A - 20

GEOLABS, INC. Geotechnical Engineering	DHHL PULEHUNUI WASTEWATER SYSTEM PULEHUNUI, MAUI, HAWAII	Log of Boring 21

Approximate Ground Surface Elevation (feet MSL): 56 *

Other Tests (Laboratory)	Moisture Content (%) (Laboratory)	Dry Density (pcf) (Laboratory)	Core Recovery (%) (Field)	RQD (%) (Field)	Penetration Resistance (blows/foot) (Field)	Pocket Pen. (tsf) (Field)	Depth (feet)	USCS	Description
	11	77			33	4.5		MH	Reddish brown **CLAYEY SILT** with some sand and a little fine gravel, very stiff, dry (alluvium)
	3				17			SM	Brown **SILTY SAND** with some gravel and traces of clay, medium dense, dry (alluvium)
	4	107			65/3" Ref.	3.0	5		Gray **BASALT**, closely to moderately fractured, slightly to moderately weathered, hard to very hard (basalt formation)
			78 92	0 83					
UC= 10140 psi			95	92			10		grades to slightly vugular, slightly to moderately fractured
UC= 11680 psi			100	93			15		grades to massive
							20		
									Boring terminated at 21.5 feet
							25		
							30		
							35		

Date Started:	June 20, 2019	Water Level:	Not Encountered
Date Completed:	June 20, 2019		
Logged By:	D. Gremminger	Drill Rig:	CME-45C TRUCK
Total Depth:	21.5 feet	Drilling Method:	4" Solid-Stem Auger
Work Order:	7932-00	Driving Energy:	140 lb. wt., 30 in. drop

Plate

A - 21

GEOLABS, INC. Geotechnical Engineering	DHHL PULEHUNUI WASTEWATER SYSTEM PULEHUNUI, MAUI, HAWAII	Log of Boring 22

Approximate Ground Surface Elevation (feet MSL): 66.5 *

Laboratory: Other Tests	Laboratory: Moisture Content (%)	Laboratory: Dry Density (pcf)	Field: Core Recovery (%)	Field: RQD (%)	Field: Penetration Resistance (blows/foot)	Field: Pocket Pen. (tsf)	Depth (feet)	USCS	Description
	8	105			43	3.5		MH	Reddish brown **CLAYEY SILT** with some sand, very stiff, dry (alluvium)
	3				22			SM	Brown **SILTY SAND** with traces of gravel, medium dense, dry (alluvium)
	4	101			30		5		
									Gray **BASALT**, severely fractured, highly weathered, medium hard (basalt formation)
			83	83	20/0"		10		grades to closely to slightly fractured, slightly to moderately weathered, very hard
UC= 17720 psi			100	85	Ref.				
			100	52			15		grades to severely to slightly fractured
							20		
									Boring terminated at 20.5 feet
							25		
							30		
							35		

Date Started:	June 24, 2019	Water Level:	Not Encountered
Date Completed:	June 24, 2019		
Logged By:	D. Gremminger	Drill Rig:	CME-45C TRUCK
Total Depth:	20.5 feet	Drilling Method:	4" Solid-Stem Auger & PQ Coring
Work Order:	7932-00	Driving Energy:	140 lb. wt., 30 in. drop

Plate

A - 22

GEOLABS, INC. Geotechnical Engineering	DHHL PULEHUNUI WASTEWATER SYSTEM PULEHUNUI, MAUI, HAWAII	Log of Boring 23

Approximate Ground Surface Elevation (feet MSL): 71 *

Laboratory: Other Tests	Laboratory: Moisture Content (%)	Laboratory: Dry Density (pcf)	Field: Core Recovery (%)	Field: RQD (%)	Field: Penetration Resistance (blows/foot)	Field: Pocket Pen. (tsf)	Depth (feet)	USCS	Description
	10	90			55/6" Ref.	4.5		ML	Reddish brown **CLAYEY SILT** with some cobbles and boulders (basaltic), hard, dry (alluvium)
			33						
	1				26		5		grades with some gravel, very stiff
			0					GP-GM	Brown **SANDY GRAVEL (BASALTIC)** with some cobbles and boulders (basaltic) and traces of silt, dense, moist (alluvium)
Sieve - #200 = 3.2%	8	120			62		10		
			24						
	6				41		15		
			100	31					Gray olivine **BASALT**, severely to closely fractured, moderately weathered, hard (basalt formation)
			95	62			20		
UC= 11130 psi									grades to severely to slightly fractured
			100	93			25		
							30		Boring terminated at 30.5 feet
							35		

Date Started:	June 25, 2019	Water Level:	Not Encountered
Date Completed:	June 25, 2019		
Logged By:	D. Gremminger	Drill Rig:	CME-45C TRUCK
Total Depth:	30.5 feet	Drilling Method:	4" Solid-Stem Auger & PQ Coring
Work Order:	7932-00	Driving Energy:	140 lb. wt., 30 in. drop

Plate

A - 23

GEOLABS, INC. Geotechnical Engineering	DHHL PULEHUNUI WASTEWATER SYSTEM PULEHUNUI, MAUI, HAWAII	Log of Boring 24

Approximate Ground Surface Elevation (feet MSL): 70.5 *

Laboratory: Other Tests	Laboratory: Moisture Content (%)	Laboratory: Dry Density (pcf)	Field: Core Recovery (%)	Field: RQD (%)	Field: Penetration Resistance (blows/foot)	Field: Pocket Pen. (tsf)	Depth (feet)	USCS	Description
	15	76			44	4.5		ML	Reddish brown **CLAYEY SILT** with some sand, very stiff, dry (alluvium)
	23				10			MH	Brown **CLAYEY SILT** with some sand, stiff, dry (alluvium)
	26	57			41		5		grades with a little gravel, very stiff
Sieve - #200 = 7.1%	3				35		10	SW-SM	Dark brown **GRAVELLY SAND** with a little silt, dense, dry (alluvium)
			83	0			15		Gray olivine **BASALT**, severely fractured, moderately weathered, hard (basalt formation)
UC= 16280 psi			100	100					grades to massive
			100	100			20		
			100	100			25		
							30		Boring terminated at 30.5 feet
							35		

Date Started:	June 24, 2019	Water Level:	Not Encountered
Date Completed:	June 24, 2019		
Logged By:	D. Gremminger	Drill Rig:	CME-45C TRUCK
Total Depth:	30.5 feet	Drilling Method:	4" Solid-Stem Auger & PQ Coring
Work Order:	7932-00	Driving Energy:	140 lb. wt., 30 in. drop

Plate

A - 24

GEOLABS, INC. Geotechnical Engineering	DHHL PULEHUNUI WASTEWATER SYSTEM PULEHUNUI, MAUI, HAWAII	Log of Boring 25

Approximate Ground Surface Elevation (feet MSL): 70.5 *

Laboratory: Other Tests	Laboratory: Moisture Content (%)	Laboratory: Dry Density (pcf)	Field: Core Recovery (%)	Field: RQD (%)	Field: Penetration Resistance (blows/foot)	Field: Pocket Pen. (tsf)	Depth (feet)	USCS	Description
	7	88			22	3.5		ML	Reddish brown **CLAYEY SILT** with some sand and traces of gravel, stiff, dry (alluvium)
	18				5			MH	Brown **CLAYEY SILT** with some sand and gravel, medium stiff, dry (alluvium)
	18	125			35		5	SM	Dark brown **SILTY SAND** with a little gravel, medium dense, damp (alluvium)
	5				35		10	GM	Gray **SANDY GRAVEL (BASALTIC)**, dense, damp (alluvium)
			50	0					
UC= 10190 psi			95	95			15		Gray olivine **BASALT**, closely to moderately fractured, moderately weathered, hard to very hard (basalt formation)
			100	100			20		grades to massive
			100	100			25		
							30		Boring terminated at 30.5 feet
							35		

Date Started:	June 25, 2019	Water Level:	Not Encountered
Date Completed:	June 25, 2019		
Logged By:	D. Gremminger	Drill Rig:	CME-45C TRUCK
Total Depth:	30.5 feet	Drilling Method:	4" Solid-Stem Auger & PQ Coring
Work Order:	7932-00	Driving Energy:	140 lb. wt., 30 in. drop

Plate

A - 25

GEOLABS, INC. Geotechnical Engineering	DHHL PULEHUNUI WASTEWATER SYSTEM PULEHUNUI, MAUI, HAWAII	Log of Boring 26

Approximate Ground Surface Elevation (feet MSL): 65.5 *

Laboratory: Other Tests	Laboratory: Moisture Content (%)	Laboratory: Dry Density (pcf)	Field: Core Recovery (%)	Field: RQD (%)	Field: Penetration Resistance (blows/foot)	Field: Pocket Pen. (tsf)	Depth (feet)	Sample	Graphic	USCS	Description
										ML	Reddish brown **SANDY SILT**, very stiff, dry (alluvium)
	19	85			33	4.5					
	19				16						grades with traces of gravel
LL=46 PI=3	21	68			25	4.0	5				grades to stiff
	18				56					ML	Greenish gray with orange mottling **SANDY SILT** with a little gravel, hard, dry (alluvium)
							10				Boring terminated at 10 feet
							15				
							20				
							25				
							30				
							35				

Date Started:	June 24, 2019	Water Level:	Not Encountered
Date Completed:	June 24, 2019		
Logged By:	D. Gremminger	Drill Rig:	CME-45C TRUCK
Total Depth:	10 feet	Drilling Method:	4" Solid-Stem Auger
Work Order:	7932-00	Driving Energy:	140 lb. wt., 30 in. drop

Plate

A - 26

GEOLABS, INC.

Geotechnical Engineering

DHHL PULEHUNUI WASTEWATER SYSTEM
PULEHUNUI, MAUI, HAWAII

Log of Boring

27

Approximate Ground Surface Elevation (feet MSL): 66.5 *

Laboratory			Field								Description
Other Tests	Moisture Content (%)	Dry Density (pcf)	Core Recovery (%)	RQD (%)	Penetration Resistance (blows/foot)	Pocket Pen. (tsf)	Depth (feet)	Sample	Graphic	USCS	
										ML	Brown **SANDY SILT**, stiff, dry (fill)
	12	80			32						
	12				17					SM	Dark gray with orangish brown mottling **SILTY SAND (BASALTIC)**, medium dense, dry (alluvium)
	6	88			18		5				
	27				26					ML	Gray with brown mottling **SANDY SILT** with a little gravel (basaltic), very stiff, moist (alluvium)
							10				Boring terminated at 10 feet
							15				
							20				
							25				
							30				
							35				

Date Started:	July 3, 2019	Water Level:	Not Encountered
Date Completed:	July 3, 2019		
Logged By:	B. Aiu	Drill Rig:	CME-45C TRUCK
Total Depth:	10 feet	Drilling Method:	4" Solid-Stem Auger & PQ Coring
Work Order:	7932-00	Driving Energy:	140 lb. wt., 30 in. drop

Plate

A - 27

GEOLABS, INC. Geotechnical Engineering	DHHL PULEHUNUI WASTEWATER SYSTEM PULEHUNUI, MAUI, HAWAII	Log of Boring 28

Approximate Ground Surface Elevation (feet MSL): 65 *

Laboratory: Other Tests	Laboratory: Moisture Content (%)	Laboratory: Dry Density (pcf)	Field: Core Recovery (%)	Field: RQD (%)	Field: Penetration Resistance (blows/foot)	Field: Pocket Pen. (tsf)	Depth (feet)	USCS	Description
								ML	Brown **SANDY SILT**, medium stiff, dry (fill)
	21	69			17	2.5		SM	Dark gray with orangish brown **SILTY SAND (BASALTIC)**, loose, dry (alluvium)
	20				7			MH	Brown **CLAYEY SILT** with a little sand (basaltic), medium stiff, dry (alluvium)
	15	85			45	4.5	5		grades to very stiff
	16				25/1" Ref.			ML	Gray with brown mottling **SANDY SILT** with a little gravel (basaltic), hard, moist (alluvium)
							10		Boring terminated at 10 feet
							15		
							20		
							25		
							30		
							35		

Date Started:	July 10, 2019	Water Level:	Not Encountered
Date Completed:	July 10, 2019		
Logged By:	B. Aiu	Drill Rig:	CME-45C TRUCK
Total Depth:	10 feet	Drilling Method:	4" Solid-Stem Auger & PQ Coring
Work Order:	7932-00	Driving Energy:	140 lb. wt., 30 in. drop

Plate

A - 28

GEOLABS, INC. Geotechnical Engineering	DHHL PULEHUNUI WASTEWATER SYSTEM PULEHUNUI, MAUI, HAWAII	Log of Boring 29

Approximate Ground Surface Elevation (feet MSL): 107 *

Other Tests	Moisture Content (%)	Dry Density (pcf)	Core Recovery (%)	RQD (%)	Penetration Resistance (blows/foot)	Pocket Pen. (tsf)	Depth (feet)	USCS	Description
								ML	Reddish brown **SANDY SILT**, dry (alluvium)
	2	76			21	1.0		SM	Brownish gray **SILTY SAND** with traces of gravel, medium dense, dry (alluvium)
	4				27				
			0				5		
	20	105			65	4.5		MH	Reddish brown **CLAYEY SILT** with some sand, hard, dry (alluvium)
			0						
							10		
	19				50/3" Ref.			MH	Grayish brown **CLAYEY SILT** with some sand and gravel, hard, damp (alluvium)
			0						
							15		
	17	95			42/6" +50/4" Ref.	4.5			
			73						
							20		
	19				76				grades with some cobbles and boulders (basaltic)
								SM	Brownish gray **SILTY SAND**, very dense, moist (weathered basalt)
									Boring terminated at 22 feet
							25		
							30		
							35		

Date Started:	June 26, 2019	Water Level:	Not Encountered
Date Completed:	June 26, 2019		
Logged By:	D. Gremminger	Drill Rig:	CME-45C TRUCK
Total Depth:	22 feet	Drilling Method:	4" Solid-Stem Auger & PQ Coring
Work Order:	7932-00	Driving Energy:	140 lb. wt., 30 in. drop

Plate

A - 29

GEOLABS, INC. Geotechnical Engineering	DHHL PULEHUNUI WASTEWATER SYSTEM PULEHUNUI, MAUI, HAWAII	Log of Boring 30

Approximate Ground Surface Elevation (feet MSL): 79.5 *

Laboratory: Other Tests	Laboratory: Moisture Content (%)	Laboratory: Dry Density (pcf)	Field: Core Recovery (%)	Field: RQD (%)	Field: Penetration Resistance (blows/foot)	Field: Pocket Pen. (tsf)	Depth (feet)	USCS	Description
								MH	Reddish brown **CLAYEY SILT** with some sand, very stiff, dry (alluvium)
	11	97			42	4.5			
	15				27				grades with a little gravel
	18	84			62	4.5	5		grades to hard
			29						grades with a little cobbles (basaltic)
							10		
	30				23				grades to very stiff
			7						
							15		
			75	19	35/2" Ref.				Gray **BASALT**, severely to closely fractured, moderately weathered, hard (basalt formation)
							20		
									Boring terminated at 21 feet
							25		
							30		
							35		

Date Started:	June 25, 2019	Water Level:	Not Encountered
Date Completed:	June 25, 2019		
Logged By:	D. Gremminger	Drill Rig:	CME-45C TRUCK
Total Depth:	21 feet	Drilling Method:	4" Solid-Stem Auger & PQ Coring
Work Order:	7932-00	Driving Energy:	140 lb. wt., 30 in. drop

Plate

A - 30

GEOLABS, INC. Geotechnical Engineering	DHHL PULEHUNUI WASTEWATER SYSTEM PULEHUNUI, MAUI, HAWAII	Log of Boring 31

Approximate Ground Surface Elevation (feet MSL): 127 *

Laboratory: Other Tests	Laboratory: Moisture Content (%)	Laboratory: Dry Density (pcf)	Field: Core Recovery (%)	Field: RQD (%)	Field: Penetration Resistance (blows/foot)	Field: Pocket Pen. (tsf)	Depth (feet)	USCS	Description
	31	58			24	2.5		MH	Reddish brown **CLAYEY SILT** with some sand and a little gravel, very stiff, dry (alluvium)
	2				12			SM	Gray **SILTY SAND**, medium dense, dry (alluvium)
Direct Shear	3	86			32		5		grades with a little gravel
			0						
	22		99	81	50/4" Ref.		10		Gray **BASALT**, severely to moderately fractured, moderately weathered, hard (basalt formation)
			75	23			15		
			50	33			20		Reddish gray **CLINKER**, severely fractured, moderately weathered, soft to medium hard (clinker)
			100	100			25		Gray **BASALT**, closely to slightly fractured, moderately weathered, hard to very hard (basalt formation)
							30		Boring terminated at 30.5 feet
							35		

Date Started:	June 26, 2019	Water Level:	Not Encountered
Date Completed:	June 26, 2019		
Logged By:	D. Gremminger	Drill Rig:	CME-45C TRUCK
Total Depth:	30.5 feet	Drilling Method:	4" Solid-Stem Auger & PQ Coring
Work Order:	7932-00	Driving Energy:	140 lb. wt., 30 in. drop

Plate

A - 31

GEOLABS, INC. Geotechnical Engineering	DHHL PULEHUNUI WASTEWATER SYSTEM PULEHUNUI, MAUI, HAWAII	Log of Boring 32

Approximate Ground Surface Elevation (feet MSL): 128.5 *

Laboratory: Other Tests	Laboratory: Moisture Content (%)	Laboratory: Dry Density (pcf)	Field: Core Recovery (%)	Field: RQD (%)	Field: Penetration Resistance (blows/foot)	Field: Pocket Pen. (tsf)	Depth (feet)	USCS	Description
	22	74			34	1.5		MH	Reddish brown **CLAYEY SILT** with some sand, dry (alluvium)
	16				34			ML	Brown **SANDY SILT** with traces of gravel, dense, dry (alluvium)
	4	75			19		5		grades to dark gray, medium dense
			0					MH	Reddish brown **CLAYEY SILT** with a little sand, very stiff, moist (alluvium)
	36				18		10		
			0						
UC=1.8 ksf	43	79			23	4.5	15		grades to stiff
			0						
	18				59		20	SM	Brownish gray **SILTY SAND** with some gravel (basaltic), very dense, moist (weathered clinker)
									Boring terminated at 22 feet
							25		
							30		
							35		

Date Started:	June 27, 2019	Water Level:	Not Encountered
Date Completed:	June 27, 2019		
Logged By:	D. Gremminger	Drill Rig:	CME-45C TRUCK
Total Depth:	22 feet	Drilling Method:	4" Solid-Stem Auger & PQ Coring
Work Order:	7932-00	Driving Energy:	140 lb. wt., 30 in. drop

Plate

A - 32

GEOLABS, INC. Geotechnical Engineering	DHHL PULEHUNUI WASTEWATER SYSTEM PULEHUNUI, MAUI, HAWAII	Log of Boring 33

Approximate Ground Surface Elevation (feet MSL): 126 *

Laboratory: Other Tests	Laboratory: Moisture Content (%)	Laboratory: Dry Density (pcf)	Field: Core Recovery (%)	Field: RQD (%)	Field: Penetration Resistance (blows/foot)	Field: Pocket Pen. (tsf)	Depth (feet)	USCS	Description
								MH	Reddish brown **CLAYEY SILT** with some sand and traces of gravel, dry (alluvium)
Direct Shear	2	77			18	0.5		SM	Gray **SILTY SAND**, medium dense, dry (alluvium)
	4				18				
					28	4.5	5		
			0					MH	Reddish brown **CLAYEY SILT** with traces of gravel, very stiff, dry (alluvium)
	37				5		10		grades to medium stiff
			48	0					
									Gray **BASALT**, severely to closely fractured, moderately weathered, hard (basalt formation)
	25				20		15	SP-SM	Gray **GRAVELLY SAND (BASALTIC)** with a little silt and clay, medium dense, moist (weathered clinker)
			0						
	14				53		20		
			100	0					Gray vesicular **BASALT**, severely fractured, moderately weathered, hard (basalt formation)
							25		
			97	28					Gray **BASALT**, severely to closely fractured, moderately weathered, hard to very hard (basalt formation)
							30		
									Boring terminated at 30.5 feet
							35		

Date Started:	June 26, 2019	Water Level:	Not Encountered
Date Completed:	June 27, 2019		
Logged By:	D. Gremminger	Drill Rig:	CME-45C TRUCK
Total Depth:	30.5 feet	Drilling Method:	4" Solid-Stem Auger & PQ Coring
Work Order:	7932-00	Driving Energy:	140 lb. wt., 30 in. drop

Plate

A - 33

GEOLABS, INC. Geotechnical Engineering	DHHL PULEHUNUI WASTEWATER SYSTEM PULEHUNUI, MAUI, HAWAII	Log of Boring 34

Approximate Ground Surface Elevation (feet MSL): 125 *

Laboratory: Other Tests	Laboratory: Moisture Content (%)	Laboratory: Dry Density (pcf)	Field: Core Recovery (%)	Field: RQD (%)	Field: Penetration Resistance (blows/foot)	Field: Pocket Pen. (tsf)	Depth (feet)	USCS	Description
	17	75			24	3.0		MH	Reddish brown **CLAYEY SILT** with some sand, stiff, dry (alluvium)
	7				17			SM	Brownish gray **SILTY SAND** with a little gravel, medium dense, dry (alluvium)
	5	94			34		5		
			0					MH	Reddish brown **CLAYEY SILT**, medium stiff, moist (alluvium)
	31		71	0	30/2" Ref.		10		Gray **BASALT**, severely to closely fractured, moderately to highly weathered, hard (basalt formation)
	23		74	0	55/6" Ref.		15		Greenish gray **CLINKER**, severely fractured, moderately weathered, soft to medium hard (clinker)
			92	0			20		
			97	82			25		Gray **BASALT**, closely to slightly fractured, moderately weathered, hard (basalt formation)
							30		Boring terminated at 30.5 feet
							35		

Date Started:	June 26, 2019	Water Level:	Not Encountered
Date Completed:	June 26, 2019		
Logged By:	D. Gremminger	Drill Rig:	CME-45C TRUCK
Total Depth:	30.5 feet	Drilling Method:	4" Solid-Stem Auger & PQ Coring
Work Order:	7932-00	Driving Energy:	140 lb. wt., 30 in. drop

Plate

A - 34

GEOLABS, INC. Geotechnical Engineering	DHHL PULEHUNUI WASTEWATER SYSTEM PULEHUNUI, MAUI, HAWAII	Log of Boring 35

Approximate Ground Surface Elevation (feet MSL): 118 *

Laboratory: Other Tests	Laboratory: Moisture Content (%)	Laboratory: Dry Density (pcf)	Field: Core Recovery (%)	Field: RQD (%)	Field: Penetration Resistance (blows/foot)	Field: Pocket Pen. (tsf)	Depth (feet)	Sample	Graphic	USCS	Description
										ML	Brown **SANDY SILT**, stiff, dry (alluvium)
	6	83			27	2.5					
	10				8					SM	Dark gray **SILTY SAND (BASALTIC)**, loose, dry (alluvium)
	6				11	2.5	5			ML	Brown **SANDY SILT**, medium stiff, dry (alluvium)
	14	77			10						grades to stiff
							10				Boring terminated at 10 feet
							15				
							20				
							25				
							30				
							35				

Date Started:	July 10, 2019	Water Level:	Not Encountered
Date Completed:	July 10, 2019		
Logged By:	B. Aiu	Drill Rig:	CME-45C TRUCK
Total Depth:	10 feet	Drilling Method:	4" Solid-Stem Auger & PQ Coring
Work Order:	7932-00	Driving Energy:	140 lb. wt., 30 in. drop

Plate

A - 35

GEOLABS, INC. Geotechnical Engineering	DHHL PULEHUNUI WASTEWATER SYSTEM PULEHUNUI, MAUI, HAWAII	Log of Boring 36

Approximate Ground Surface Elevation (feet MSL): 121 *

Laboratory: Other Tests	Laboratory: Moisture Content (%)	Laboratory: Dry Density (pcf)	Field: Core Recovery (%)	Field: RQD (%)	Field: Penetration Resistance (blows/foot)	Field: Pocket Pen. (tsf)	Depth (feet)	USCS	Description
								ML	Brown **SANDY SILT**, dry (alluvium)
Sieve - #200 = 0.8%	4	88			20			SM	Dark gray **SAND (BASALTIC)** with traces of silt and gravel, medium dense, dry (alluvium)
	3				16				
	6				6		5		grades to loose
								ML	Brown **SANDY SILT**, stiff, moist (alluvium)
	21				9				
							10		Boring terminated at 10 feet
							15		
							20		
							25		
							30		
							35		

Date Started:	July 9, 2019	Water Level:	Not Encountered
Date Completed:	July 9, 2019		
Logged By:	B. Aiu	Drill Rig:	CME-45C TRUCK
Total Depth:	10 feet	Drilling Method:	4" Solid-Stem Auger & PQ Coring
Work Order:	7932-00	Driving Energy:	140 lb. wt., 30 in. drop

Plate

A - 36

GEOLABS, INC. Geotechnical Engineering	DHHL PULEHUNUI WASTEWATER SYSTEM PULEHUNUI, MAUI, HAWAII	Log of Boring 37

Approximate Ground Surface Elevation (feet MSL): 117.5 *

Laboratory: Other Tests	Laboratory: Moisture Content (%)	Laboratory: Dry Density (pcf)	Field: Core Recovery (%)	Field: RQD (%)	Field: Penetration Resistance (blows/foot)	Field: Pocket Pen. (tsf)	Depth (feet)	Sample	Graphic	USCS	Description
										ML	Brown **SANDY SILT**, dry (alluvium)
	9	76			14					SM	Dark gray with some reddish brown **SILTY SAND (BASALTIC)**, loose to medium dense, dry (alluvium)
	3				12						
LL=NP PI=NP Sieve - #200 = 5.1%	26				9		5			SW-SM	Brown **SAND** with a little silt and traces of gravel, loose, moist (alluvium)
	24				11						grades to medium dense
							10				Boring terminated at 10 feet
							15				
							20				
							25				
							30				
							35				

Date Started:	July 9, 2019	Water Level:	Not Encountered
Date Completed:	July 9, 2019		
Logged By:	B. Aiu	Drill Rig:	CME-45C TRUCK
Total Depth:	10 feet	Drilling Method:	4" Solid-Stem Auger & PQ Coring
Work Order:	7932-00	Driving Energy:	140 lb. wt., 30 in. drop

Plate

A - 37

GEOLABS, INC. Geotechnical Engineering	DHHL PULEHUNUI WASTEWATER SYSTEM PULEHUNUI, MAUI, HAWAII	Log of Boring 38

Approximate Ground Surface Elevation (feet MSL): 18 *

Laboratory: Other Tests	Laboratory: Moisture Content (%)	Laboratory: Dry Density (pcf)	Field: Core Recovery (%)	Field: RQD (%)	Field: Penetration Resistance (blows/foot)	Field: Pocket Pen. (tsf)	Depth (feet)	Sample	Graphic	USCS	Description
										ML	Reddish brown **SANDY SILT**, medium stiff, dry (alluvium)
	2	86			13					SM	Grayish brown **SILTY SAND** with some clay and a little fine gravel, loose, dry (alluvium)
	9				8					ML	Reddish brown **SANDY SILT**, soft to medium stiff, dry (alluvium)
Sieve - #200 = 57.7%	35	61			7	2.0	5				
	2				65/6" Ref.		10				Gray **GRAVELLY COBBLES (BASALTIC)** with some sand, very dense, dry (alluvium)
										ML	Brown **SANDY SILT** with traces of fine gravel, stiff, moist (alluvium)
LL=NP PI=NP Sieve - #200 = 69.9%	39	63			15		15				
	35				6		20			MH	Orangish brown **CLAYEY SILT** with some sand and fine gravel, medium stiff, moist (alluvium)
											Boring terminated at 21.5 feet
							25				
							30				
							35				

Date Started:	June 18, 2019	Water Level:	Not Measured
Date Completed:	June 18, 2019		
Logged By:	D. Gremminger	Drill Rig:	CME-45C TRUCK
Total Depth:	21.5 feet	Drilling Method:	4" Solid-Stem Auger
Work Order:	7932-00	Driving Energy:	140 lb. wt., 30 in. drop

Plate

A - 38

GEOLABS, INC. Geotechnical Engineering	DHHL PULEHUNUI WASTEWATER SYSTEM PULEHUNUI, MAUI, HAWAII	Log of Boring 39

Approximate Ground Surface Elevation (feet MSL): 15 *

Laboratory: Other Tests	Laboratory: Moisture Content (%)	Laboratory: Dry Density (pcf)	Field: Core Recovery (%)	Field: RQD (%)	Field: Penetration Resistance (blows/foot)	Field: Pocket Pen. (tsf)	Depth (feet)	USCS	Description
	12	83			13	4.0		ML	Reddish brown **SANDY SILT** with traces of fine gravel, medium stiff, dry (alluvium)
	9				10				grades to stiff
	8	74			26		5	SM	Grayish brown **SILTY SAND**, medium dense, dry (alluvium)
LL=52 PI=26	30				3		10	MH	Brown **CLAYEY SILT** with some sand, soft, damp (alluvium)
	22	99			70	4.5	15	ML	Tannish brown **GRAVELLY SILT** with some sand, hard, dry (alluvium)
	42				14/6" +40/3" Ref.		20	MH	Orangish brown with black mottling **CLAYEY SILT** with some sand, hard, wet (alluvium)
									Boring terminated at 21.3 feet
							25		
							30		
							35		

Date Started:	June 17, 2019	Water Level:	Not Measured
Date Completed:	June 17, 2019		
Logged By:	D. Gremminger	Drill Rig:	CME-45C TRUCK
Total Depth:	21.3 feet	Drilling Method:	4" Solid-Stem Auger
Work Order:	7932-00	Driving Energy:	140 lb. wt., 30 in. drop

Plate

A - 39

GEOLABS, INC. Geotechnical Engineering	DHHL PULEHUNUI WASTEWATER SYSTEM PULEHUNUI, MAUI, HAWAII	Log of Boring 40

Approximate Ground Surface Elevation (feet MSL): 16 *

Laboratory: Other Tests	Laboratory: Moisture Content (%)	Laboratory: Dry Density (pcf)	Field: Core Recovery (%)	Field: RQD (%)	Field: Penetration Resistance (blows/foot)	Field: Pocket Pen. (tsf)	Depth (feet)	USCS	Description
								ML	Brown **SANDY SILT** with traces of fine gravel, medium stiff, dry (alluvium)
	7	77			14				
	12				11				grades to stiff
							5	ML	Grayish brown **SANDY SILT** with traces of fine gravel, stiff, dry (alluvium)
Direct Shear Sieve - #200 = 61.6%	21	65			24				
	3				32		10		grades with a little cobbles and boulders (basaltic), hard
							15	MH	Brown **CLAYEY SILT** with some sand, stiff, moist (alluvium)
UC=1.0 ksf	30	92			22	5.0			
			0 0						
	40				9		20		grades to reddish brown with a little fine gravel
			0						
							25	SM	Dark brown **SILTY SAND** with some gravel and a little clay, loose, moist (weathered basalt)
					16				
			50	0					
							30		Gray vugular **BASALT**, moderately fractured to massive, slightly weathered, hard to very hard (basalt formation)
			98	98	10/0" Ref.				
							35		

Date Started:	June 17, 2019	Water Level:	Not Measured
Date Completed:	June 19, 2019		
Logged By:	D. Gremminger	Drill Rig:	CME-45C TRUCK
Total Depth:	50.5 feet	Drilling Method:	4" Solid-Stem Auger & PQ Coring
Work Order:	7932-00	Driving Energy:	140 lb. wt., 30 in. drop

Plate

A - 40.1

GEOLABS, INC. Geotechnical Engineering	DHHL PULEHUNUI WASTEWATER SYSTEM PULEHUNUI, MAUI, HAWAII	Log of Boring 40

Laboratory			Field								
Other Tests	Moisture Content (%)	Dry Density (pcf)	Core Recovery (%)	RQD (%)	Penetration Resistance (blows/foot)	Pocket Pen. (tsf)	Depth (feet)	Sample	Graphic	USCS	(Continued from previous plate) Description
			100	50							grades to vesicular, severely to slightly fractured
			82	40			40				
											VOID
			67	0			45				Reddish gray to gray **CLINKER**, severely fractured, moderately weathered, soft to medium hard (clinker)
							50				Boring terminated at 50.5 feet
							55				
							60				
							65				
							70				

Date Started:	June 17, 2019	Water Level:	Not Measured	Plate
Date Completed:	June 19, 2019			
Logged By:	D. Gremminger	Drill Rig:	CME-45C TRUCK	
Total Depth:	50.5 feet	Drilling Method:	4" Solid-Stem Auger & PQ Coring	A - 40.2
Work Order:	7932-00	Driving Energy:	140 lb. wt., 30 in. drop	

GEOLABS, INC.

Geotechnical Engineering

DHHL PULEHUNUI WASTEWATER SYSTEM
PULEHUNUI, MAUI, HAWAII

Log of Boring

41

Approximate Ground Surface Elevation (feet MSL): 17 *

Laboratory			Field								Description
Other Tests	Moisture Content (%)	Dry Density (pcf)	Core Recovery (%)	RQD (%)	Penetration Resistance (blows/foot)	Pocket Pen. (tsf)	Depth (feet)	Sample	Graphic	USCS	
	9	8			83					ML	Reddish brown **SANDY SILT** with a little cobbles (basaltic), hard, dry (alluvium)
	8				16						
	10	74	0		18		5			SP-SM	Grayish brown **SILTY SAND** with a little fine gravel, medium dense, dry (alluvium)
	4		0		25		10				grades with some gravel (basaltic)
LL=43 PI=19 UC=1.1 ksf	30	93	0		40	5.0	15			CL	Reddish brown **SANDY CLAY**, very stiff, moist (recent alluvium)
	25		0		16		20				grades with a little gravel
	54	71	60		27		25			SM	Grayish brown **SILTY SAND** with some gravel and a little clay, medium dense, moist (weathered basalt)
			98	65	60/6" Ref.		30				Gray **BASALT**, severely to moderately fractured, moderately weathered, hard (basalt formation)
							35				

Date Started:	June 19, 2019	Water Level:	Not Measured
Date Completed:	June 20, 2019		
Logged By:	D. Gremminger	Drill Rig:	CME-45C TRUCK
Total Depth:	50.9 feet	Drilling Method:	4" Solid-Stem Auger & PQ Coring
Work Order:	7932-00	Driving Energy:	140 lb. wt., 30 in. drop

Plate

A - 41.1

GEOLABS, INC. Geotechnical Engineering	DHHL PULEHUNUI WASTEWATER SYSTEM PULEHUNUI, MAUI, HAWAII	Log of Boring 41

Laboratory			Field								
Other Tests	Moisture Content (%)	Dry Density (pcf)	Core Recovery (%)	RQD (%)	Penetration Resistance (blows/foot)	Pocket Pen. (tsf)	Depth (feet)	Sample	Graphic	USCS	(Continued from previous plate) Description
			50	0							grades to severely fractured, highly weathered, medium hard
			93	35			40				grades to severely to closely fractured, moderately weathered, hard
			30	0			45				Gray **CLINKER**, severely fractured, highly weathered, medium hard (clinker)
					40/5" Ref.		50				Boring terminated at 50.9 feet
							55				
							60				
							65				
							70				

Date Started:	June 19, 2019	Water Level:	Not Measured	Plate
Date Completed:	June 20, 2019			
Logged By:	D. Gremminger	Drill Rig:	CME-45C TRUCK	
Total Depth:	50.9 feet	Drilling Method:	4" Solid-Stem Auger & PQ Coring	A - 41.2
Work Order:	7932-00	Driving Energy:	140 lb. wt., 30 in. drop	

APPENDIX B

APPENDIX B

Laboratory Tests

Moisture Content (ASTM D2216) and Unit Weight (ASTM D2937) determinations were performed on selected samples as an aid in the classification and evaluation of soil properties. The test results are presented on the Logs of Borings at the appropriate sample depths.

Fourteen Atterberg Limits tests (ASTM D4318) were performed on selected soil samples to evaluate the liquid and plastic limits. The test results are summarized on the Logs of Borings at the appropriate sample depths. Graphic presentation of the test results are provided on Plates B-1 and B-2.

Sixteen Sieve Analysis tests (ASTM C117 & C136) were performed on selected soil samples to evaluate the gradation characteristics of the soils and to aid in soil classification. Graphic presentation of the grain size distributions is provided on Plates B-3 through B-6.

Three one-inch ring swell tests were performed on remolded samples to evaluate the swelling potential of the near-surface soils under different surcharge loads. The results of these tests are summarized on Plate B-7.

To evaluate the unconfined compressive strength of the on-site clayey soils, three Unconfined Compression tests were performed on selected in-situ samples in accordance with ASTM D2166. Individual stress-strain curves of the unconfined compression tests are presented on Plates B-8 through B-10.

Eight Direct Shear tests (ASTM D3080) were performed on selected samples to evaluate the shear strength characteristics of the material tested. The test results are presented on Plates B-11 through B-18.

Thirty-two Unconfined Compression tests (ASTM D7012 Method C) were performed on selected rock cores to evaluate their unconfined compressive strength of the rock formation encountered. Results of the unconfined compression tests are presented on Plates B-19 and B-20.

Six laboratory California Bearing Ratio tests (ASTM D1883) were performed on bulk samples of the near-surface soils to evaluate the support characteristics of the soils. The test results are presented on Plates B-21 through B-26.

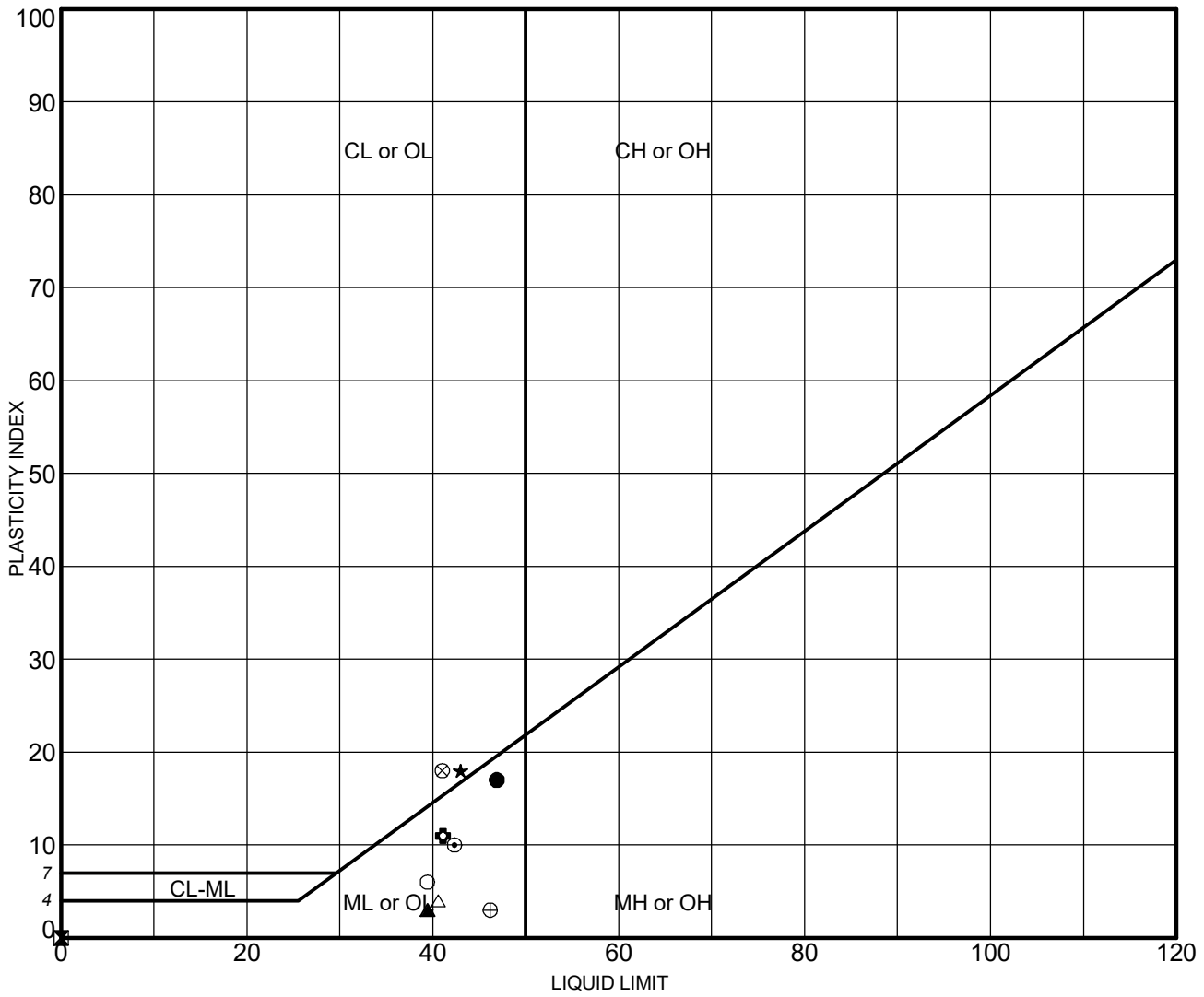

	Sample	Depth (ft)	LL	PL	PI	Description
●	B-1	10.0-11.5	47	30	17	Grayish brown sandy silt (ML)
⊠	B-2	1.0-2.5	NP	NP	NP	Brown sandy silt (Non-Plastic)
▲	B-5	5.0-6.5	39	36	3	Reddish brown sandy silt (ML)
★	B-7	2.5-4.0	43	25	18	Reddish brown silty clay (CL)
⊙	B-11	5.0-6.5	42	32	10	Dark brown sandy silt (ML) with some gravel
✿	B-12	5.0-6.5	41	30	11	Light brown sandy silt (ML) with some gravel
○	B-13	5.0-6.5	39	33	6	Light brown sandy silt (ML) with some gravel
△	B-15	1.0-2.5	41	37	4	Dark brown gravelly silt (ML)
⊗	B-16	10.0-11.5	41	23	18	Dark brownish red sandy clay (CL) with some gravel
⊕	B-26	5.0-6.5	46	43	3	Reddish brown sandy silt (ML)

NP = NON-PLASTIC

GEOLABS, INC.
GEOTECHNICAL ENGINEERING

W.O. 7932-00

ATTERBERG LIMITS TEST RESULTS - ASTM D4318

DHHL PULEHUNUI WASTEWATER SYSTEM
PULEHUNUI, MAUI, HAWAII

Plate
B - 1

G ATTERBERG PI-100 LL-120 7932-00.GPJ GEOLABS.GDT 11/25/19

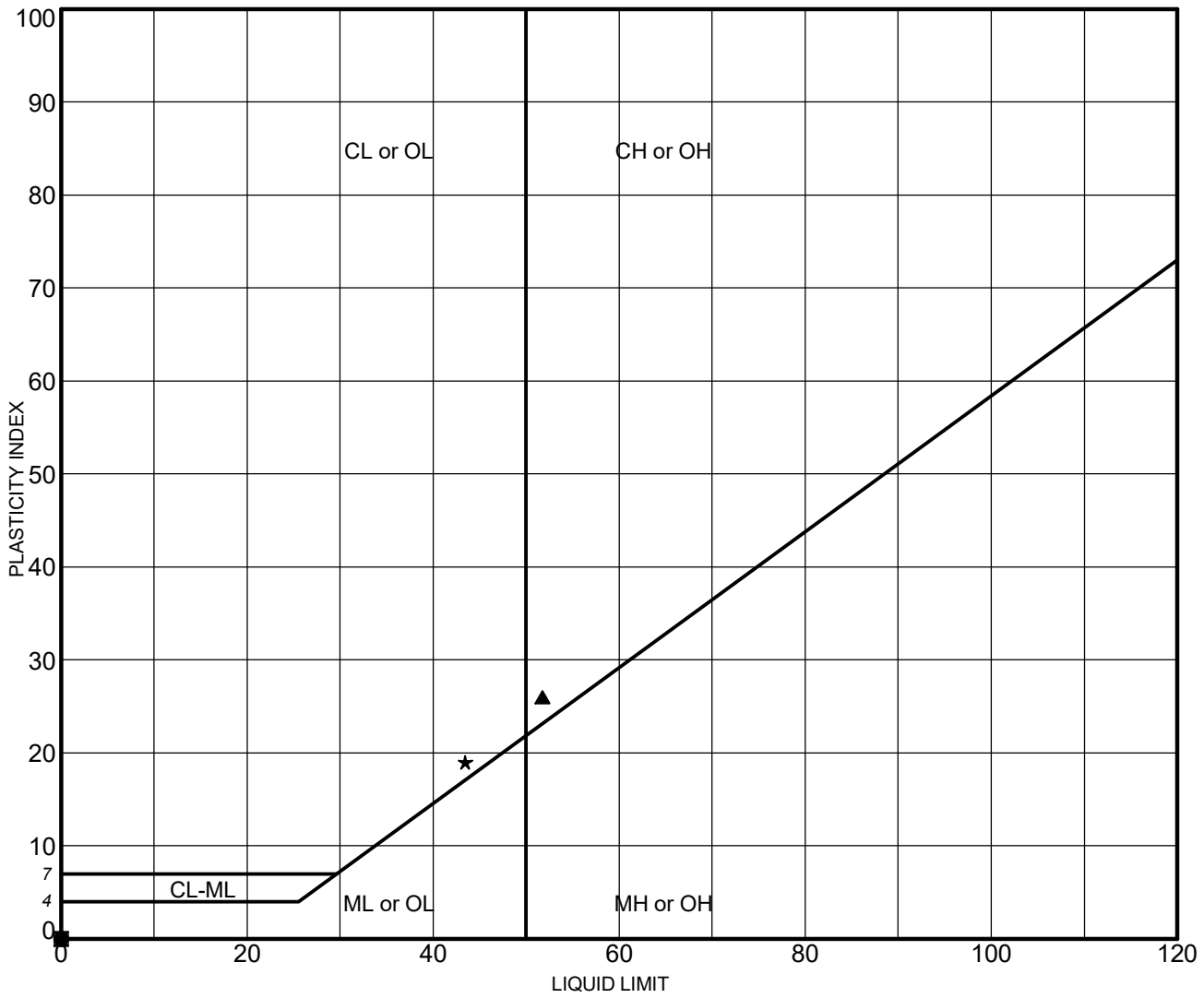

	Sample	Depth (ft)	LL	PL	PI	Description
●	B-37	5.0-6.5	NP	NP	NP	Brown sand (Non-Plastic) with a little silt and traces of gravel
⊠	B-38	15.0-16.5	NP	NP	NP	Brown sandy silt (Non-Plastic) with traces of fine gravel
▲	B-39	10.0-11.5	52	26	26	Brown clayey silt (CH) with some sand
★	B-41	15.5-17.0	43	24	19	Reddish brown sandy clay (CL)

NP = NON-PLASTIC

GEOLABS, INC.
GEOTECHNICAL ENGINEERING

W.O. 7932-00

ATTERBERG LIMITS TEST RESULTS - ASTM D4318

DHHL PULEHUNUI WASTEWATER SYSTEM
PULEHUNUI, MAUI, HAWAII

Plate
B - 2

G ATTERBERG PI-100 LL-120 7932-00.GPJ GEOLABS.GDT 11/25/19

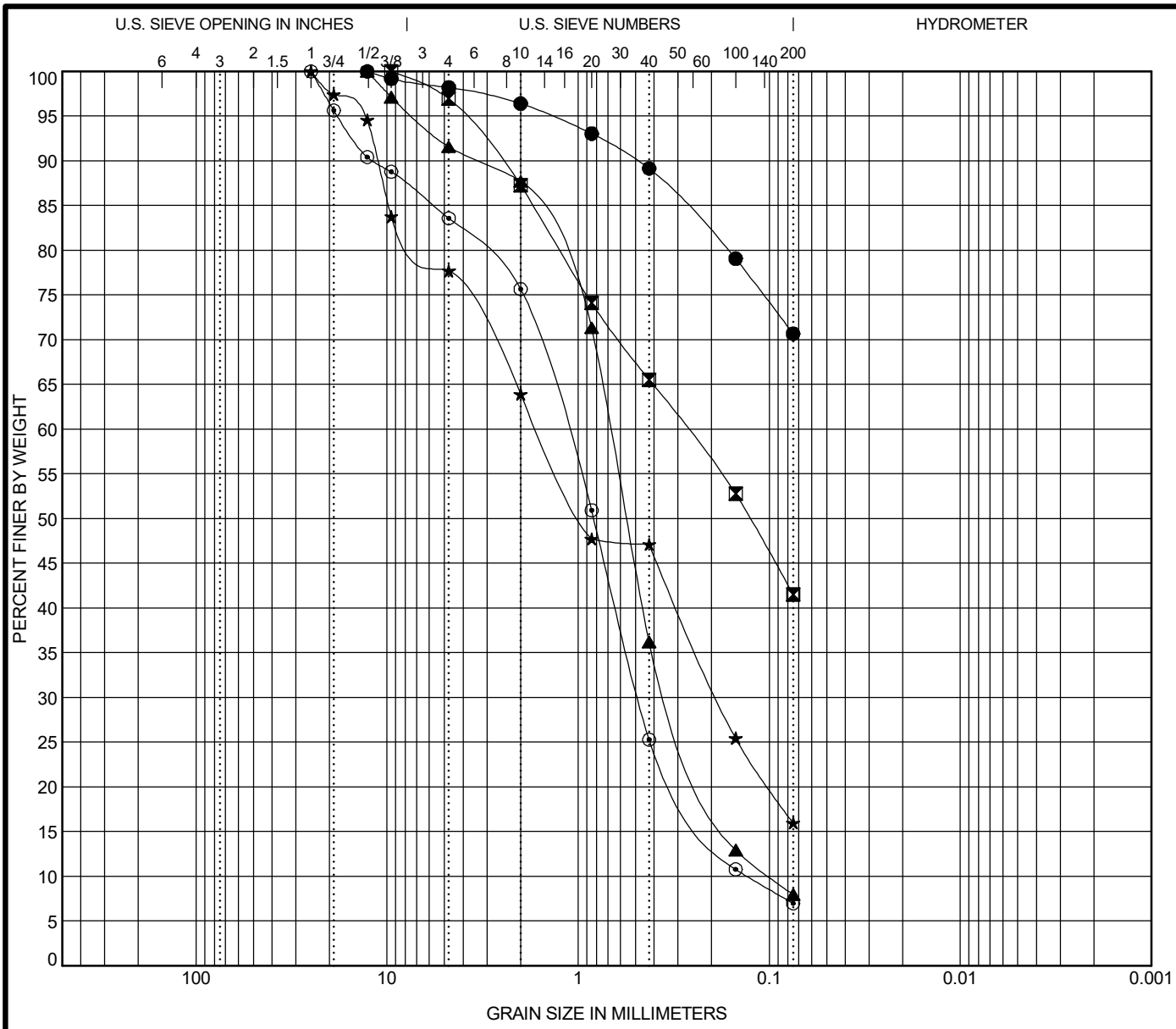

COBBLES	GRAVEL		SAND			SILT OR CLAY
	coarse	fine	coarse	medium	fine	

	Sample	Depth (ft)	Description	LL	PL	PI	Cc	Cu
●	B-6	10.0-11.5	Reddish brown silt (ML) with some sand and traces of gravel					
⊠	B-7	10.0-11.5	Reddish brown silty sand (SM) with traces of gravel					
▲	B-10	5.0-6.5	Dark brownish gray sand (SW-SM) with a little silt and gravel				1.5	6.8
★	B-12	15.0-16.5	Light grayish brown silty sand (SM) with some gravel					
⊙	B-13	10.0-11.5	Dark grayish brown gravelly sand (SW-SM) with a little silt				1.5	8.9

	Sample	Depth (ft)	D100 (mm)	D60 (mm)	D30 (mm)	D10 (mm)	%Gravel	%Sand	%Fine
●	B-6	10.0-11.5	12.7				1.8	27.5	70.7
⊠	B-7	10.0-11.5	9.5	0.271			3.1	55.4	41.5
▲	B-10	5.0-6.5	12.7	0.68	0.322	0.099	8.4	83.6	8.0
★	B-12	15.0-16.5	25	1.627	0.187		22.3	61.7	16.0
⊙	B-13	10.0-11.5	25	1.163	0.483	0.13	16.4	76.6	7.0

GEOLABS, INC.
GEOTECHNICAL ENGINEERING

W.O. 7932-00

GRAIN SIZE DISTRIBUTION - ASTM C117 & C136

DHHL PULEHUNUI WASTEWATER SYSTEM
PULEHUNUI, MAUI, HAWAII

Plate
B - 3

G_GRAIN_SIZE_MOD 7932-00.GPJ GEOLABS.GDT 11/25/19

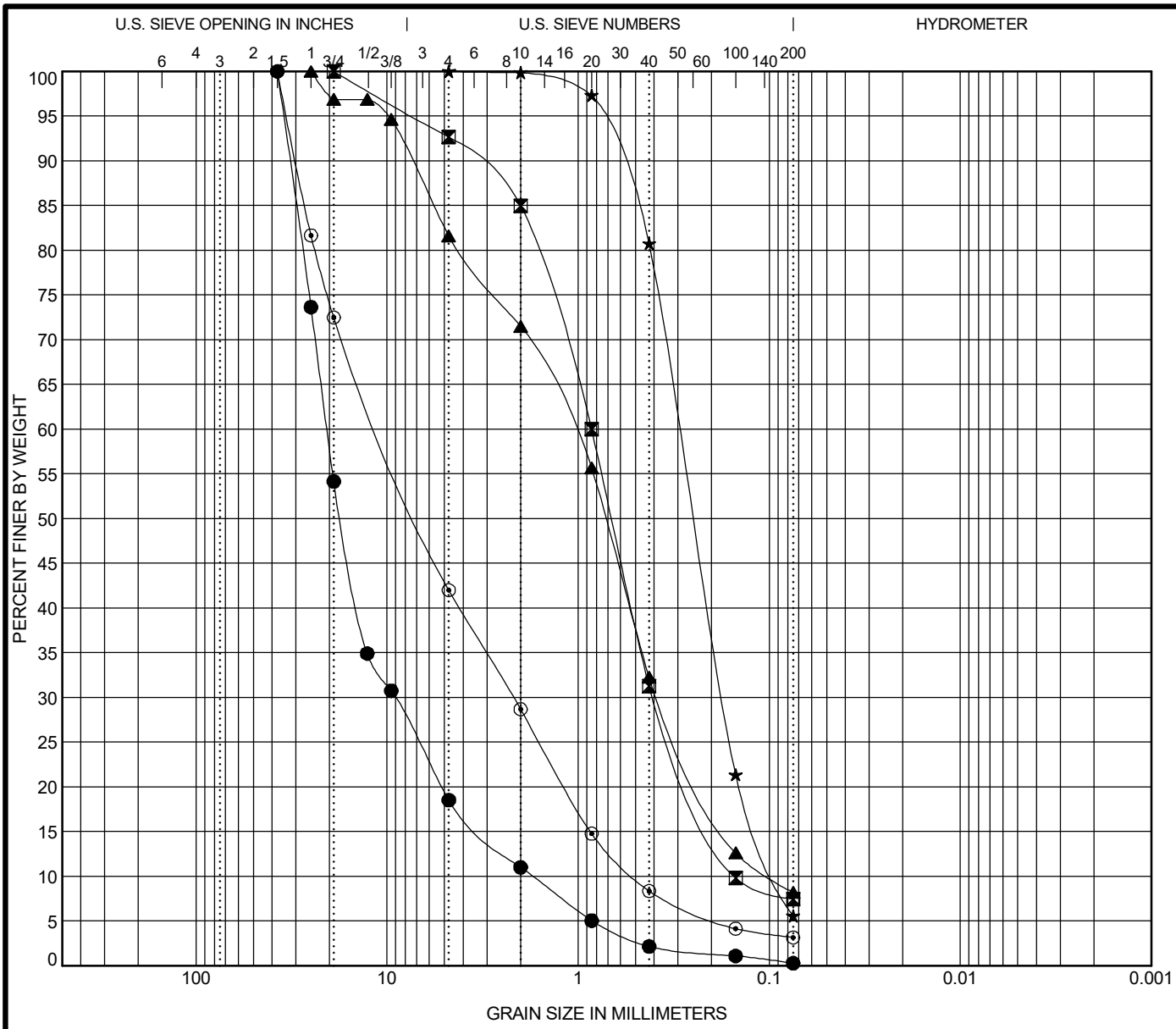

COBBLES	GRAVEL		SAND			SILT OR CLAY
	coarse	fine	coarse	medium	fine	

	Sample	Depth (ft)	Description	LL	PL	PI	Cc	Cu
●	B-14	16.5-17.5	Dark gray gravel (GW) with some sand and traces of silt				2.3	11.9
⊠	B-15	5.0-6.5	Dark gray w/ orangish brown sand (SP-SM) w/ a little silt & gravel				1.2	5.6
▲	B-19	5.0-6.5	Grayish brown sand (SW-SM) w/ a little silt and some fine gravel				1.3	10.8
★	B-19	10.0-11.5	Gray sand (SP-SM) with a little silt				1.1	3.2
⊙	B-23	10.5-12.0	Brown sandy gravel (GP) with traces of silt				0.9	21.2

	Sample	Depth (ft)	D100 (mm)	D60 (mm)	D30 (mm)	D10 (mm)	%Gravel	%Sand	%Fine
●	B-14	16.5-17.5	37.5	20.632	9.104	1.732	81.5	18.2	0.3
⊠	B-15	5.0-6.5	19	0.851	0.4	0.151	7.4	85.2	7.5
▲	B-19	5.0-6.5	25	1.075	0.377	0.099	18.4	73.4	8.2
★	B-19	10.0-11.5	4.75	0.295	0.175	0.091	0.0	94.4	5.6
⊙	B-23	10.5-12.0	37.5	10.773	2.179	0.508	58.0	38.8	3.2

GEOLABS, INC.
GEOTECHNICAL ENGINEERING

W.O. 7932-00

GRAIN SIZE DISTRIBUTION - ASTM C117 & C136

DHHL PULEHUNUI WASTEWATER SYSTEM
PULEHUNUI, MAUI, HAWAII

Plate
B - 4

G_GRAIN_SIZE_MOD 7932-00.GPJ GEOLABS.GDT 11/25/19

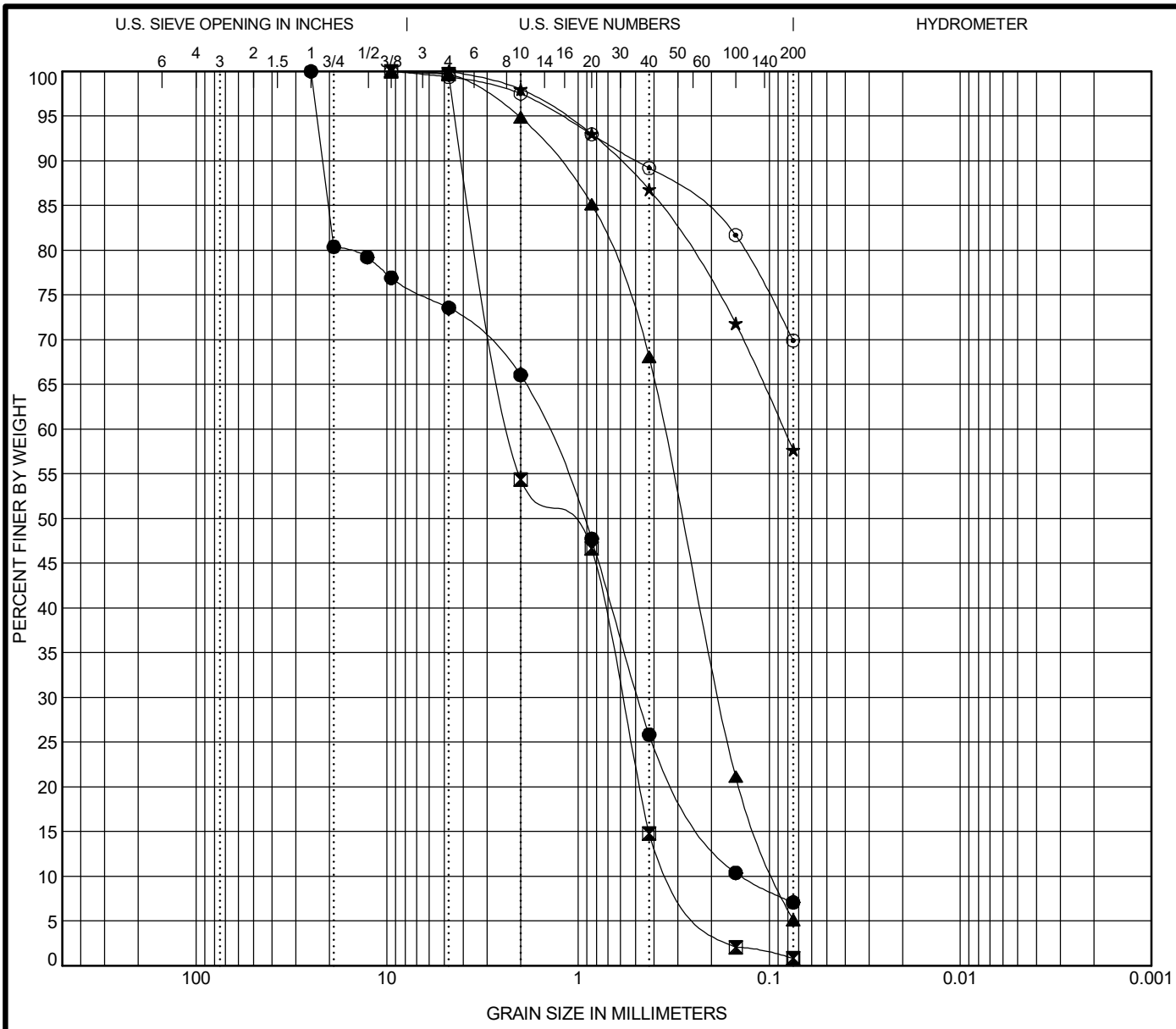

COBBLES	GRAVEL		SAND			SILT OR CLAY
	coarse	fine	coarse	medium	fine	

	Sample	Depth (ft)	Description	LL	PL	PI	Cc	Cu
●	B-24	10.0-11.5	Dark brown gravelly sand (SW-SM) with a little silt				1.1	10.9
⊠	B-36	1.0-2.5	Dark gray sand (SP) with traces of silt and gravel				0.5	7.7
▲	B-37	5.0-6.5	Brown sand (Non-Plastic) with a little silt and traces of gravel	NP	NP	NP	1.0	3.8
★	B-38	5.0-6.5	Reddish brown sandy silt (ML)					
⊙	B-38	15.0-16.5	Brown sandy silt (Non-Plastic) with traces of fine gravel	NP	NP	NP		

	Sample	Depth (ft)	D100 (mm)	D60 (mm)	D30 (mm)	D10 (mm)	%Gravel	%Sand	%Fine
●	B-24	10.0-11.5	25	1.508	0.485	0.138	26.4	66.5	7.1
⊠	B-36	1.0-2.5	9.5	2.228	0.592	0.288	0.3	98.8	0.8
▲	B-37	5.0-6.5	9.5	0.355	0.183	0.093	0.3	94.6	5.1
★	B-38	5.0-6.5	4.75	0.084			0.0	42.3	57.7
⊙	B-38	15.0-16.5	9.5				0.6	29.5	69.9

GEOLABS, INC.
GEOTECHNICAL ENGINEERING

W.O. 7932-00

GRAIN SIZE DISTRIBUTION - ASTM C117 & C136

DHHL PULEHUNUI WASTEWATER SYSTEM
PULEHUNUI, MAUI, HAWAII

Plate
B - 5

G_GRAIN_SIZE_MOD 7932-00.GPJ GEOLABS.GDT 11/25/19

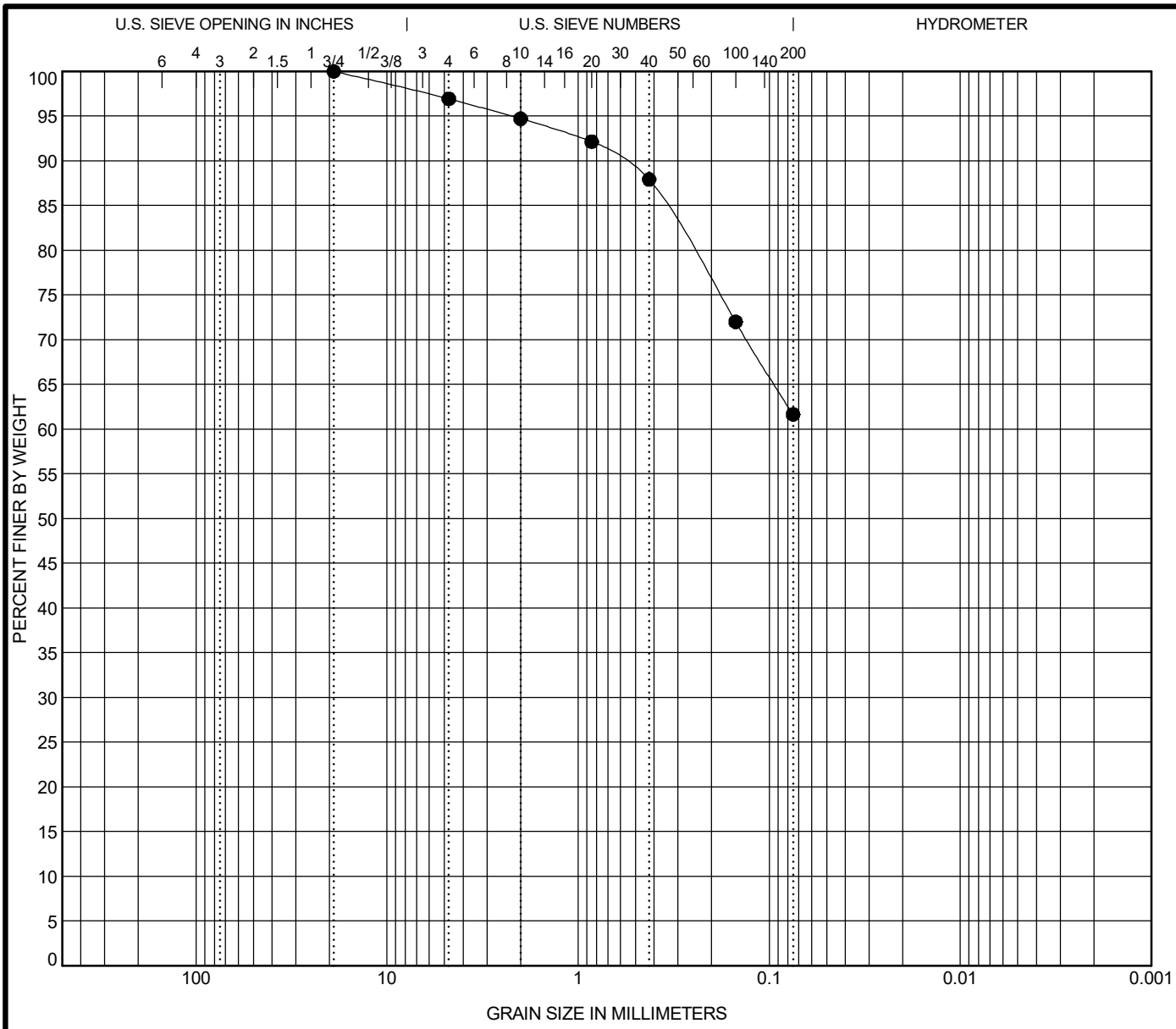

COBBLES	GRAVEL		SAND			SILT OR CLAY
	coarse	fine	coarse	medium	fine	

	Sample	Depth (ft)	Description	LL	PL	PI	Cc	Cu
●	B-40	5.0-6.5	Grayish brown sandy silt with traces of fine gravel					

	Sample	Depth (ft)	D100 (mm)	D60 (mm)	D30 (mm)	D10 (mm)	%Gravel	%Sand	%Fine
●	B-40	5.0-6.5	19				3.1	35.3	61.6

GEOLABS, INC.
GEOTECHNICAL ENGINEERING

W.O. 7932-00

GRAIN SIZE DISTRIBUTION - ASTM C117 & C136

DHHL PULEHUNUI WASTEWATER SYSTEM
PULEHUNUI, MAUI, HAWAII

Plate
B - 6

G_GRAIN_SIZE_MOD_7932-00.GPJ GEOLABS.GDT 11/25/19

Location	Depth (feet)	Soil Description	Dry Density (pcf)	Moisture Contents Initial (%)	Air-Dried (%)	Final (%)	Ring Swell (%)
B-22**	1.0 - 2.5	Reddish brown clayey silt with some sand	83.6	14.8	9.8	39.9	6.0
B-32**	1.0 - 2.5	Reddish brown clayey silt with some sand	85.4	24.3	13.9	36.5	6.5
B-34**	1.0 - 2.5	Reddish brown clayey silt with some sand	77.7	24.3	16.2	41.5	0.8

NOTE: Samples tested were either relatively undisturbed or remolded in 2.4-inch diameter by 1-inch high rings. They were air-dried overnight and then saturated for 24 hours under a surcharge pressure of 55 psf.

* Relatively Undisturbed

** Remolded

GEOLABS, INC.

GEOTECHNICAL ENGINEERING

W.O. 7932-00

SUMMARY OF RING SWELL TESTS

DHHL PULEHUNUI WASTEWATER SYSTEM
PULEHUNUI, MAUI, HAWAII

Plate
B - 7

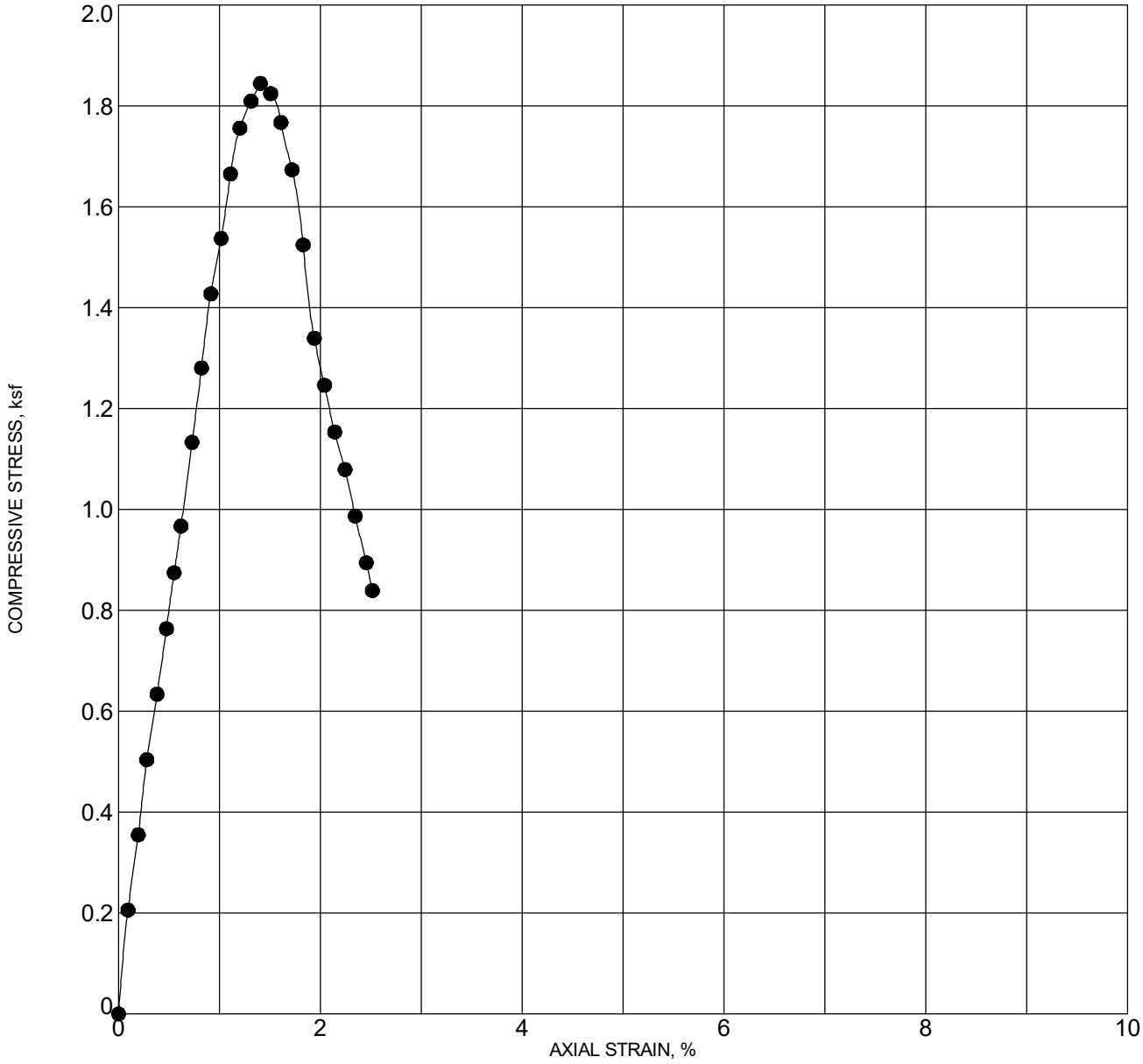

Unconfined Compressive Strength (ksf):	1.84
Axial Strain at Failure (%):	1.4
Strain Rate (% / minute):	0.97

Location: B-32
Depth: 15.5 - 17.0 feet
Description: Reddish brown clayey silt with a little sand
Test Date: 8/15/2019

Dry Density (pcf)	79.0	Sample Diameter (inches)	2.410
Moisture (%)	42.7	Sample Height (inches)	5.200

GEOLABS, INC.
GEOTECHNICAL ENGINEERING

W.O. 7932-00

UNCONFINED COMPRESSION TEST - ASTM D2166

DHHL PULEHUNUI WASTEWATER SYSTEM
PULEHUNUI, MAUI, HAWAII

Plate
B - 8

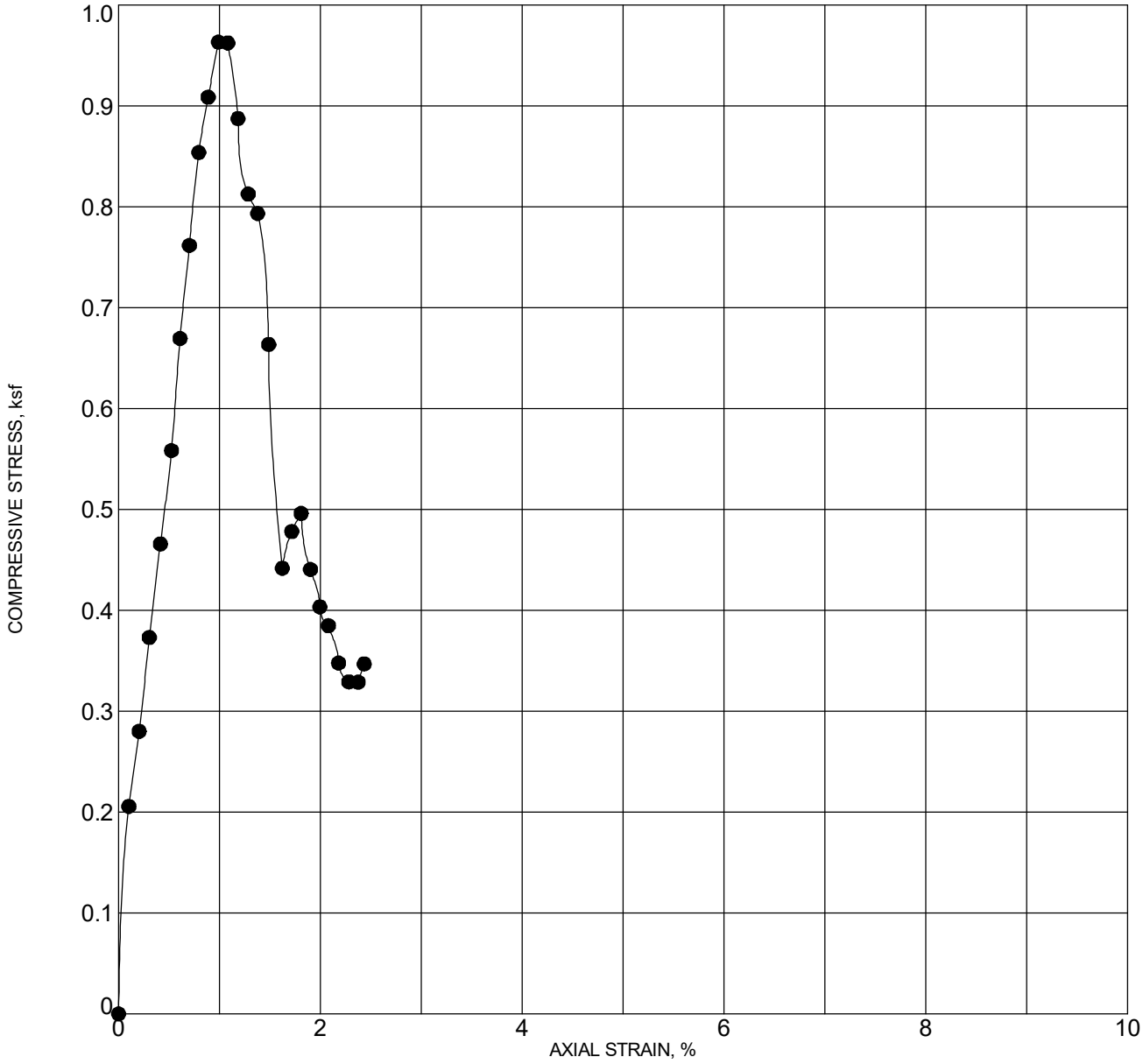

Unconfined Compressive Strength (ksf):	0.96
Axial Strain at Failure (%):	1.0
Strain Rate (% / minute):	1.01

Location: B-40
Depth: 15.0 - 16.5 feet
Description: Brown clayey silt with some sand
Test Date: 8/15/2019

Dry Density (pcf)	91.8	Sample Diameter (inches)	2.410
Moisture (%)	29.7	Sample Height (inches)	5.210

GEOLABS, INC.
GEOTECHNICAL ENGINEERING

W.O. 7932-00

UNCONFINED COMPRESSION TEST - ASTM D2166

DHHL PULEHUNUI WASTEWATER SYSTEM
PULEHUNUI, MAUI, HAWAII

Plate
B - 9

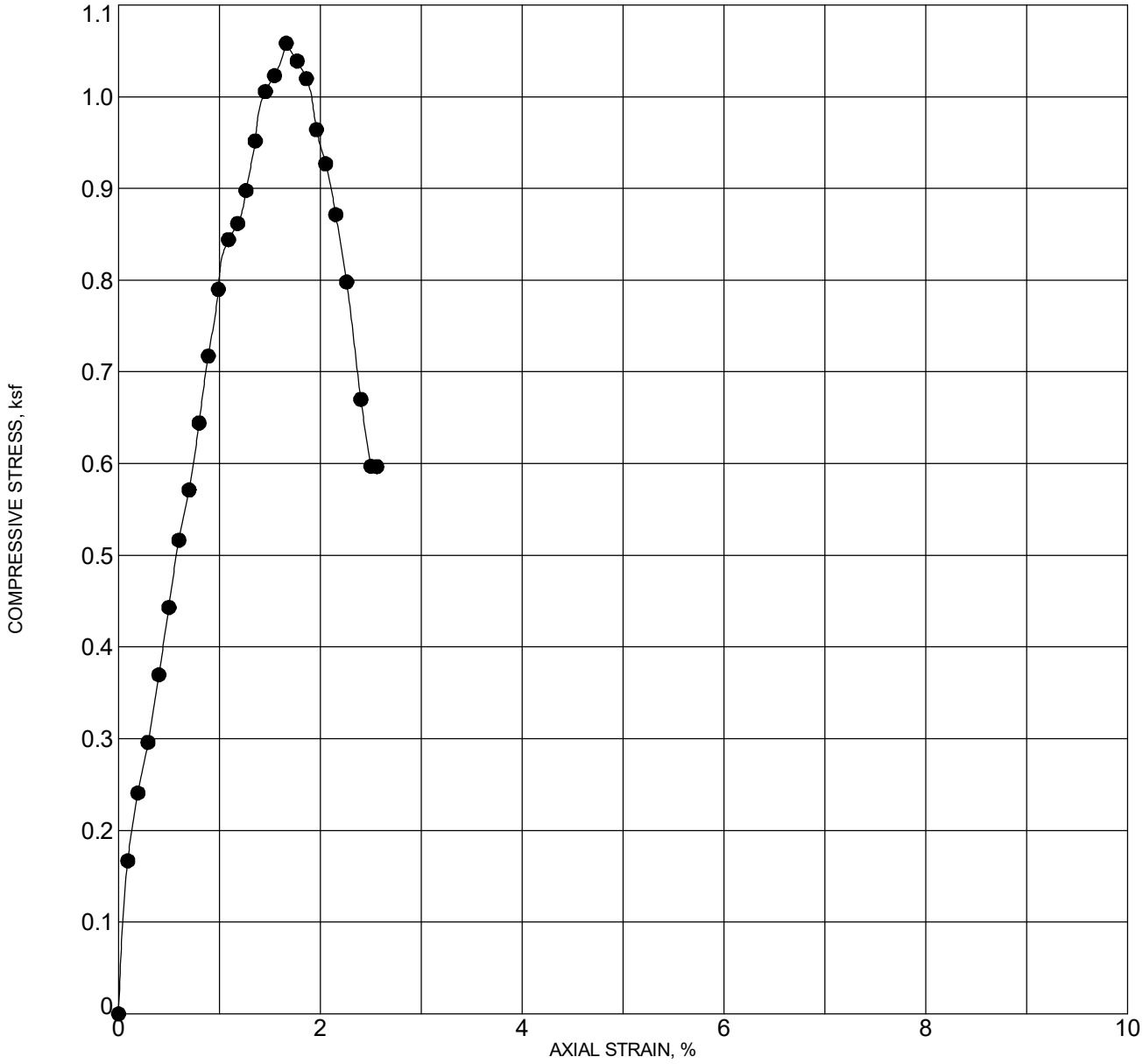

Unconfined Compressive Strength (ksf):	1.06
Axial Strain at Failure (%):	1.7
Strain Rate (% / minute):	1.00

Location: B-41
Depth: 15.5 - 17.0 feet
Description: Reddish brown sandy clay (CL)
Test Date: 8/15/2019

Dry Density (pcf)	83.7	Sample Diameter (inches)	2.420
Moisture (%)	37.0	Sample Height (inches)	5.300

GEOLABS, INC.
GEOTECHNICAL ENGINEERING

W.O. 7932-00

UNCONFINED COMPRESSION TEST - ASTM D2166

DHHL PULEHUNUI WASTEWATER SYSTEM
PULEHUNUI, MAUI, HAWAII

Plate
B - 10

G_UC_7932-00.GPJ GEOLABS.GDT 11/25/19

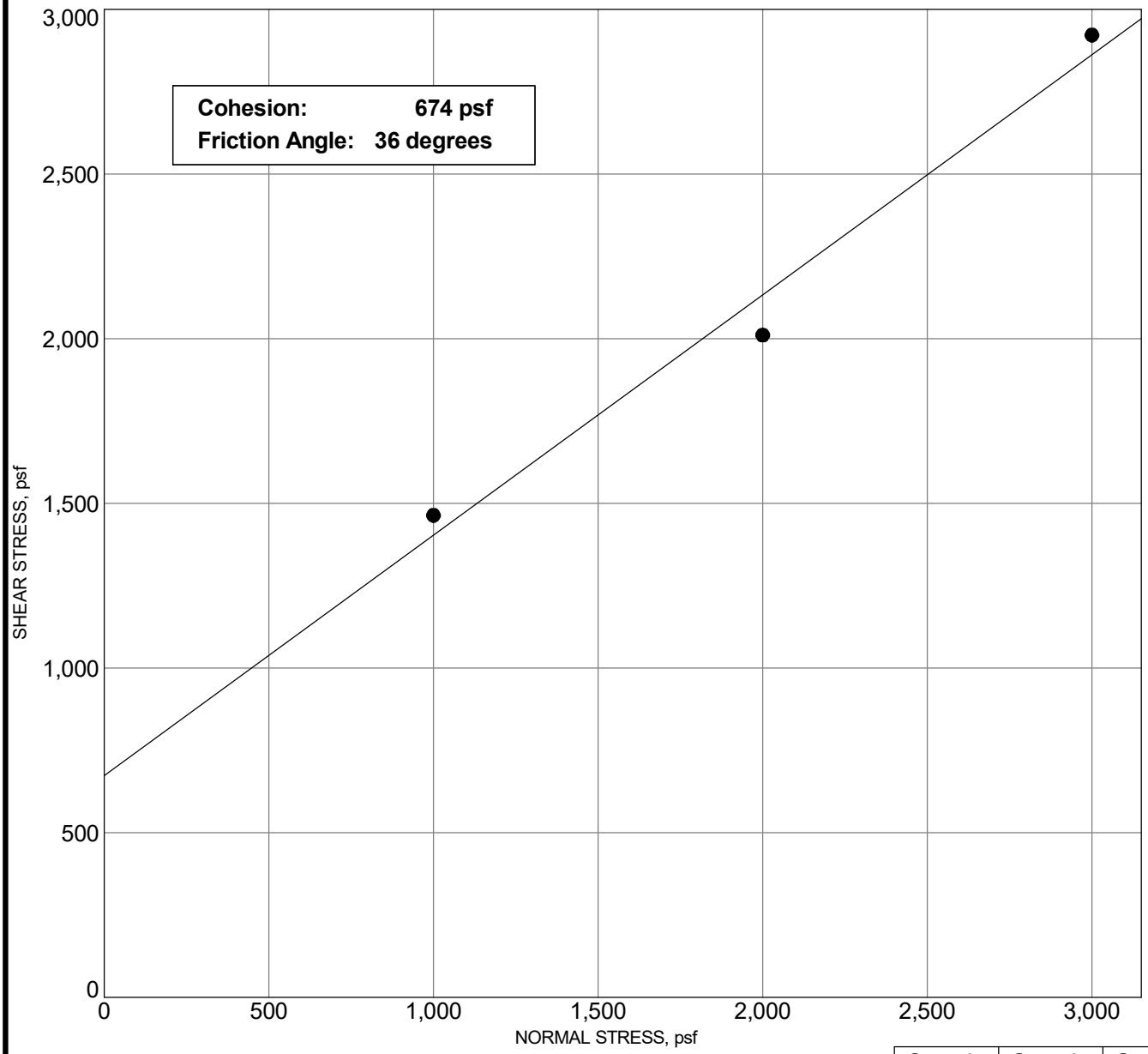

		Sample #1	Sample #2	Sample #3
INITIAL	Moisture Content, %	13.1	13.0	12.2
	Dry Density, pcf	87.0	85.2	91.0
	Height, inches	1.00	1.00	1.00
FINAL	Moisture Content, %	33.5	31.3	30.3
	Dry Density, pcf	87.1	86.9	92.7
	Height, inches	0.998	0.980	0.982
	Diameter, inches	2.42	2.42	2.42
	Deformation Rate, inch/minute	0.0025	0.0021	0.0023
	Normal Stress, psf	**1000**	**2000**	**3000**
	Peak Shear Stress, psf	**1464**	**2011**	**2922**
	Shear Displacement, inches	0.43	0.40	0.40

Sample: B-5
Depth: 1.0 - 2.5 feet
Description: Reddish brown sandy silt

GEOLABS, INC.
GEOTECHNICAL ENGINEERING

W.O. 7932-00

DIRECT SHEAR TEST - ASTM D3080

DHHL PULEHUNUI WASTEWATER SYSTEM
PULEHUNUI, MAUI, HAWAII

Plate
B - 11

G_DIRECT_SHEAR_7932-00.GPJ GEOLABS.GDT 11/25/19

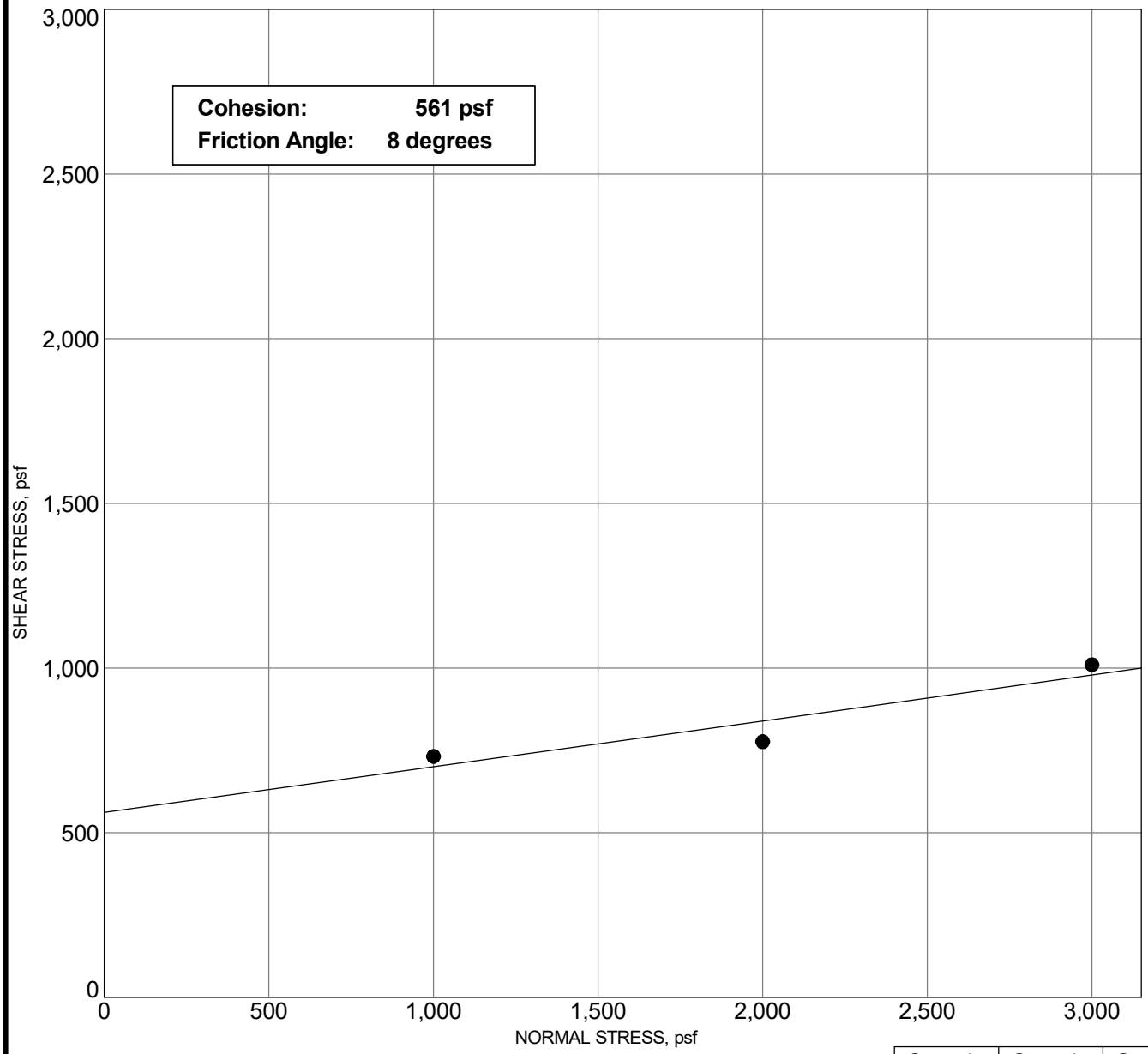

		Sample #1	Sample #2	Sample #3
INITIAL	Moisture Content, %	22.6	45.4	26.0
	Dry Density, pcf	65.2	57.5	61.7
	Height, inches	1.00	1.00	1.00
FINAL	Moisture Content, %	50.4	46.5	47.9
	Dry Density, pcf	62.3	59.0	63.1
	Height, inches	1.046	0.974	0.978
	Diameter, inches	2.42	2.42	2.42
	Deformation Rate, inch/minute	0.0025	0.0023	0.0024
	Normal Stress, psf	**1000**	**2000**	**3000**
	Peak Shear Stress, psf	**732**	**776**	**1010**
	Shear Displacement, inches	0.43	0.42	0.42

Sample: B-11
Depth: 5.0 - 6.5 feet
Description: Dark brown sandy silt (ML) with some gravel

GEOLABS, INC.
GEOTECHNICAL ENGINEERING

W.O. 7932-00

DIRECT SHEAR TEST - ASTM D3080

DHHL PULEHUNUI WASTEWATER SYSTEM
PULEHUNUI, MAUI, HAWAII

Plate
B - 12

G_DIRECT_SHEAR_7932-00.GPJ GEOLABS.GDT 11/25/19

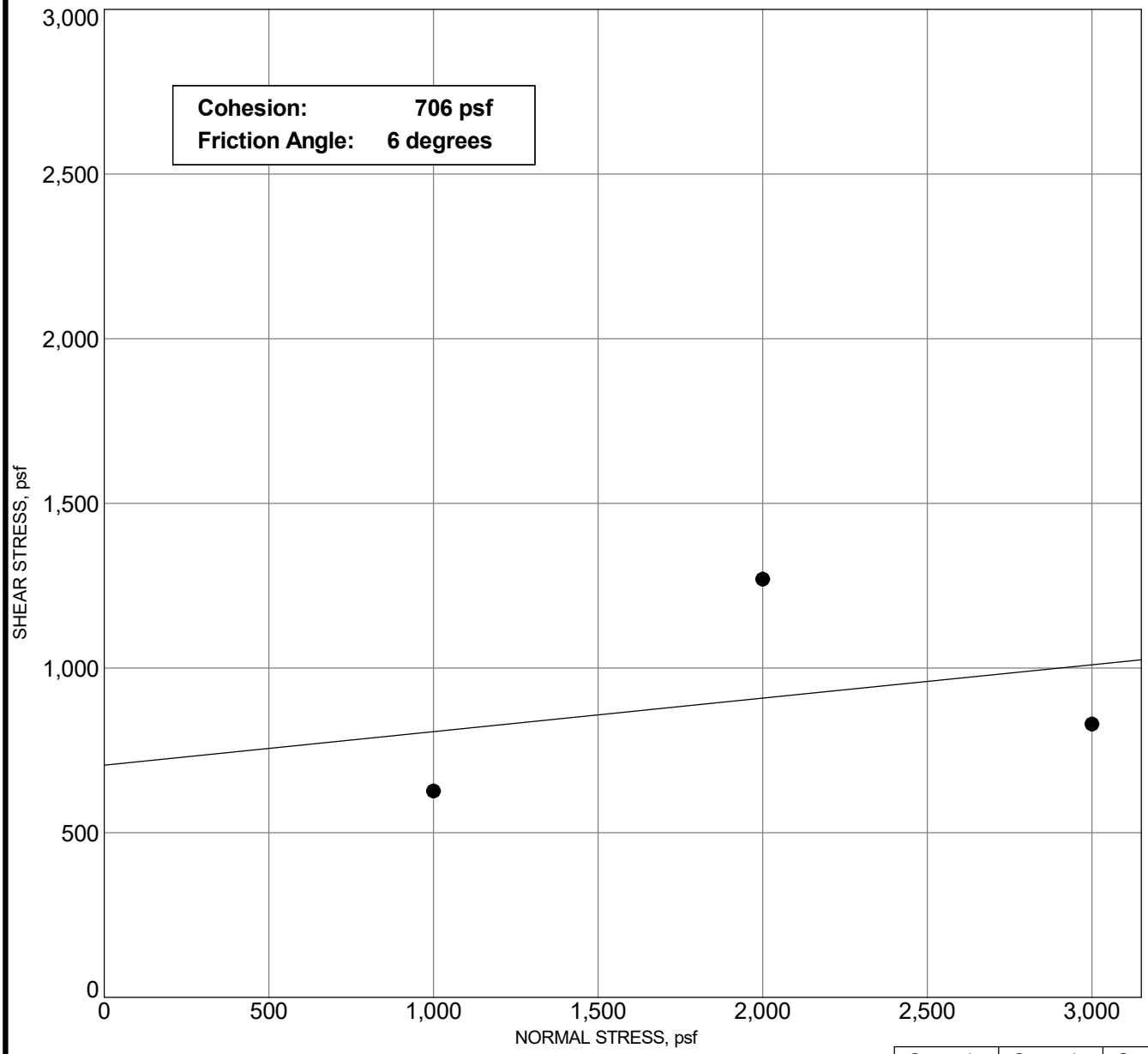

		Sample #1	Sample #2	Sample #3
INITIAL	Moisture Content, %	18.6	22.9	31.7
	Dry Density, pcf	61.5	62.2	58.4
	Height, inches	1.00	1.00	1.00
FINAL	Moisture Content, %	53.5	46.1	45.0
	Dry Density, pcf	59.6	65.0	59.4
	Height, inches	1.031	0.957	0.982
	Diameter, inches	2.42	2.42	2.42
	Deformation Rate, inch/minute	0.0024	0.0023	0.0024
	Normal Stress, psf	**1000**	**2000**	**3000**
	Peak Shear Stress, psf	**627**	**1270**	**830**
	Shear Displacement, inches	0.43	0.41	0.43

Sample: B-13
Depth: 5.0 - 6.5 feet
Description: Light brown sandy silt (ML) with some gravel

GEOLABS, INC.
GEOTECHNICAL ENGINEERING

W.O. 7932-00

DIRECT SHEAR TEST - ASTM D3080

DHHL PULEHUNUI WASTEWATER SYSTEM
PULEHUNUI, MAUI, HAWAII

Plate
B - 13

G DIRECT SHEAR 7932-00.GPJ GEOLABS.GDT 11/25/19

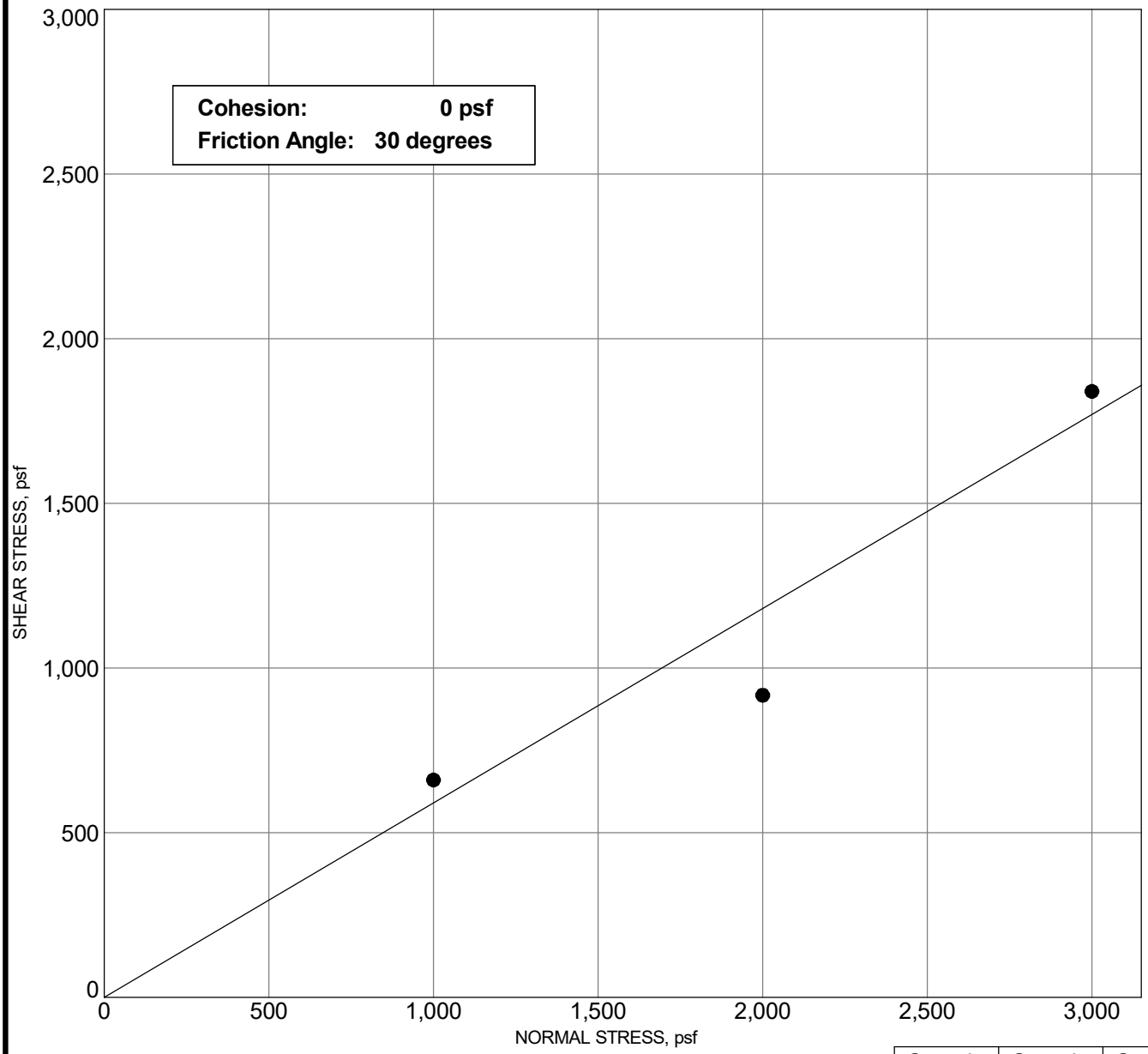

		Sample #1	Sample #2	Sample #3
INITIAL	Moisture Content, %	17.2	19.7	24.2
	Dry Density, pcf	67.4	71.1	68.2
	Height, inches	1.00	1.00	1.00
FINAL	Moisture Content, %	51.1	44.6	38.4
	Dry Density, pcf	65.3	73.8	71.9
	Height, inches	1.033	0.964	0.948
	Diameter, inches	2.42	2.42	2.42
	Deformation Rate, inch/minute	0.0024	0.0024	0.0024
	Normal Stress, psf	**1000**	**2000**	**3000**
	Peak Shear Stress, psf	**660**	**917**	**1840**
	Shear Displacement, inches	0.43	0.42	0.42

Sample: B-14
Depth: 5.0 - 6.5 feet
Description: Light brown sandy silt with some gravel

GEOLABS, INC.
GEOTECHNICAL ENGINEERING

W.O. 7932-00

DIRECT SHEAR TEST - ASTM D3080

DHHL PULEHUNUI WASTEWATER SYSTEM
PULEHUNUI, MAUI, HAWAII

Plate
B - 14

G_DIRECT_SHEAR_7932-00.GPJ GEOLABS.GDT 11/25/19

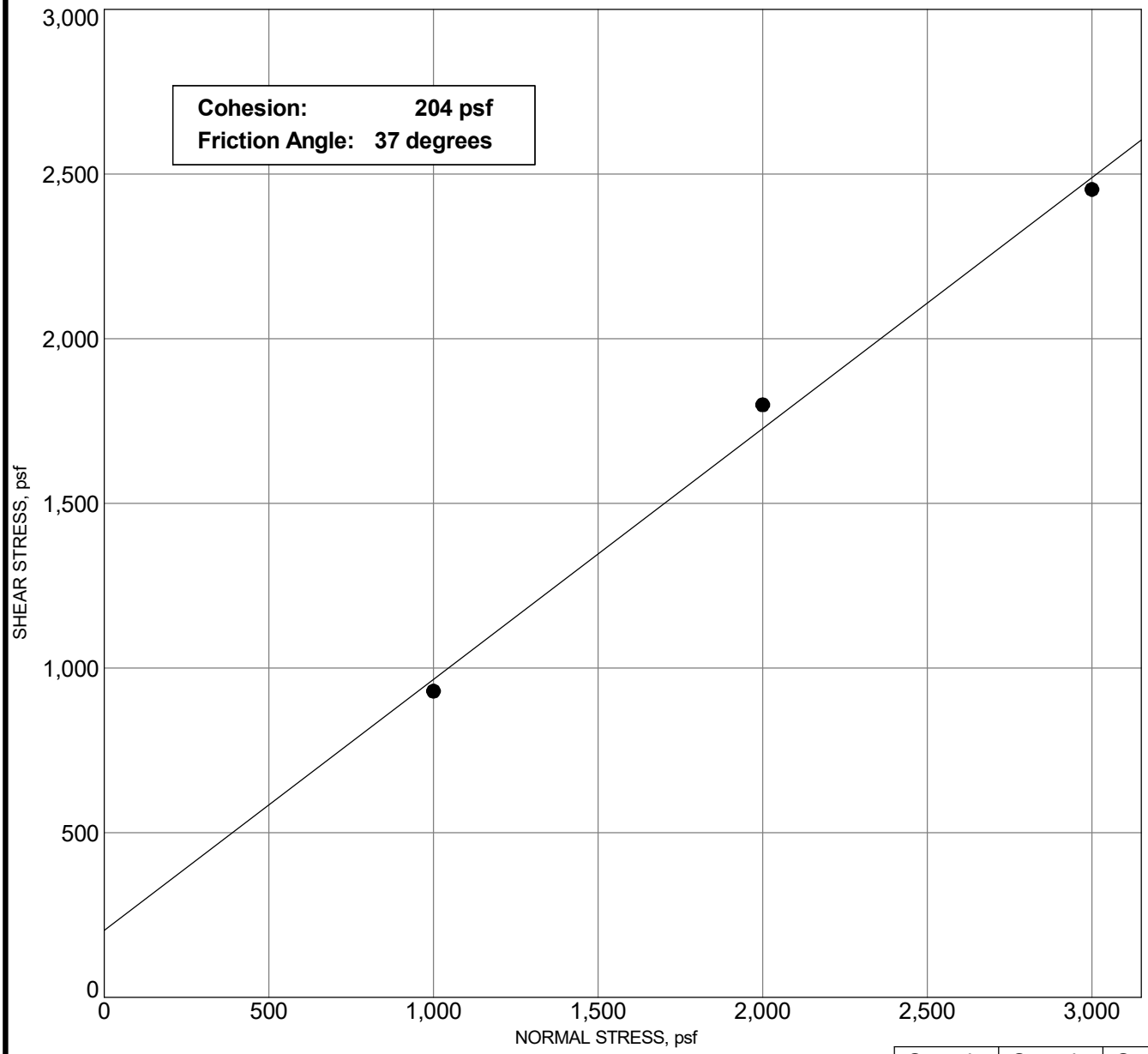

		Sample #1	Sample #2	Sample #3
INITIAL	Moisture Content, %	10.6	11.2	8.8
	Dry Density, pcf	91.8	92.4	92.4
	Height, inches	1.00	1.00	1.00
FINAL	Moisture Content, %	24.7	21.5	23.7
	Dry Density, pcf	92.6	91.7	93.1
	Height, inches	0.991	1.008	0.993
	Diameter, inches	2.42	2.42	2.42
	Deformation Rate, inch/minute	0.0025	0.0021	0.0022
	Normal Stress, psf	**1000**	**2000**	**3000**
	Peak Shear Stress, psf	**930**	**1799**	**2453**
	Shear Displacement, inches	0.43	0.41	0.41

Sample: B-15

Depth: 5.0 - 6.5 feet

Description: Dark gray w/ orangish brown sand (SP-SM) w/ a little silt & gravel

GEOLABS, INC.

GEOTECHNICAL ENGINEERING

W.O. 7932-00

DIRECT SHEAR TEST - ASTM D3080

DHHL PULEHUNUI WASTEWATER SYSTEM
PULEHUNUI, MAUI, HAWAII

Plate
B - 15

G_DIRECT_SHEAR_7932-00.GPJ GEOLABS.GDT 11/25/19

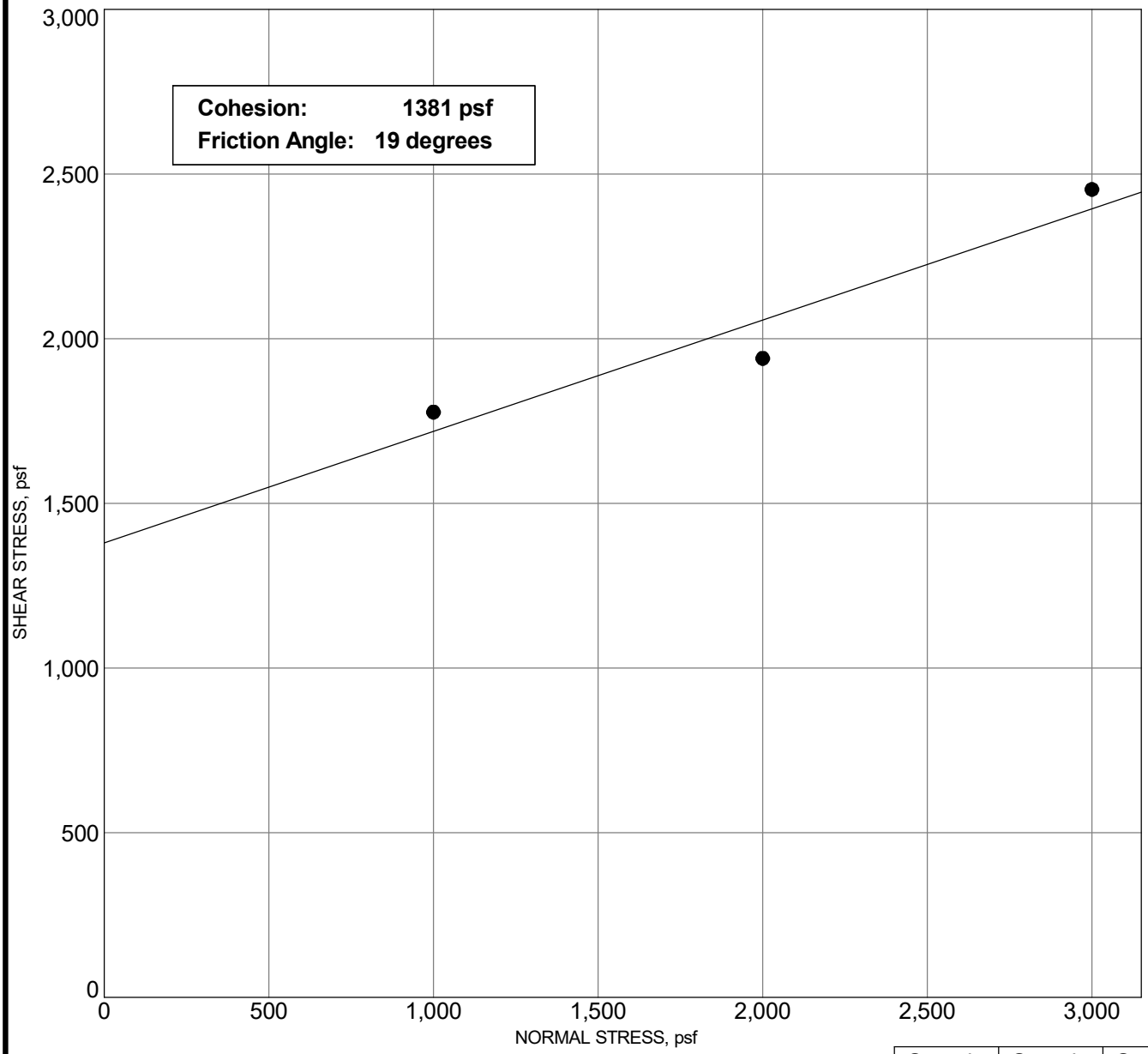

		Sample #1	Sample #2	Sample #3
INITIAL	Moisture Content, %	4.7	3.6	4.7
	Dry Density, pcf	78.8	84.6	87.5
	Height, inches	1.00	1.00	1.00
FINAL	Moisture Content, %	37.8	32.0	30.9
	Dry Density, pcf	80.1	86.5	87.6
	Height, inches	0.984	0.978	0.999
	Diameter, inches	2.42	2.42	2.42
	Deformation Rate, inch/minute	0.0025	0.0022	0.0021
	Normal Stress, psf	**1000**	**2000**	**3000**
	Peak Shear Stress, psf	**1777**	**1940**	**2453**
	Shear Displacement, inches	0.43	0.41	0.41

Sample: B-31
Depth: 5.0 - 6.5 feet
Description: Gray silty sand with a little gravel

GEOLABS, INC.
GEOTECHNICAL ENGINEERING

W.O. 7932-00

DIRECT SHEAR TEST - ASTM D3080

DHHL PULEHUNUI WASTEWATER SYSTEM
PULEHUNUI, MAUI, HAWAII

Plate
B - 16

G_DIRECT_SHEAR_7932-00.GPJ GEOLABS.GDT 11/25/19

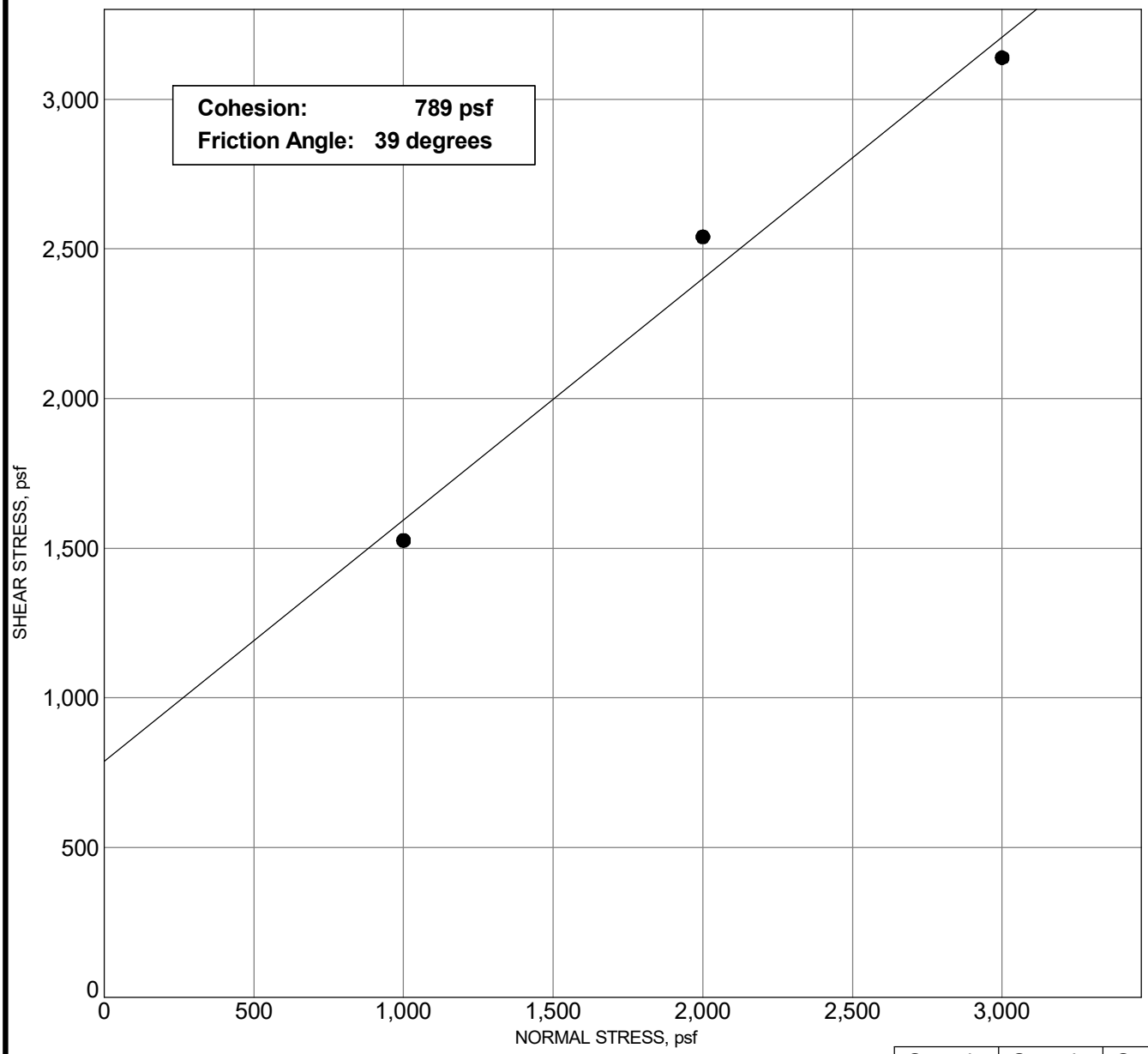

		Sample #1	Sample #2	Sample #3
INITIAL	Moisture Content, %	3.0	3.4	4.4
	Dry Density, pcf	85.6	86.4	90.1
	Height, inches	1.00	1.00	1.00
FINAL	Moisture Content, %	33.0	30.6	28.8
	Dry Density, pcf	87.0	84.1	88.9
	Height, inches	0.983	1.027	1.014
	Diameter, inches	2.42	2.42	2.42
	Deformation Rate, inch/minute	0.0025	0.0019	0.0021
	Normal Stress, psf	**1000**	**2000**	**3000**
	Peak Shear Stress, psf	**1526**	**2540**	**3138**
	Shear Displacement, inches	0.43	0.41	0.41

Sample: B-33
Depth: 1.0 - 2.5 feet
Description: Gray silty sand

GEOLABS, INC.
GEOTECHNICAL ENGINEERING

W.O. 7932-00

DIRECT SHEAR TEST - ASTM D3080

DHHL PULEHUNUI WASTEWATER SYSTEM
PULEHUNUI, MAUI, HAWAII

Plate
B - 17

G_DIRECT_SHEAR_7932-00.GPJ GEOLABS.GDT 11/25/19

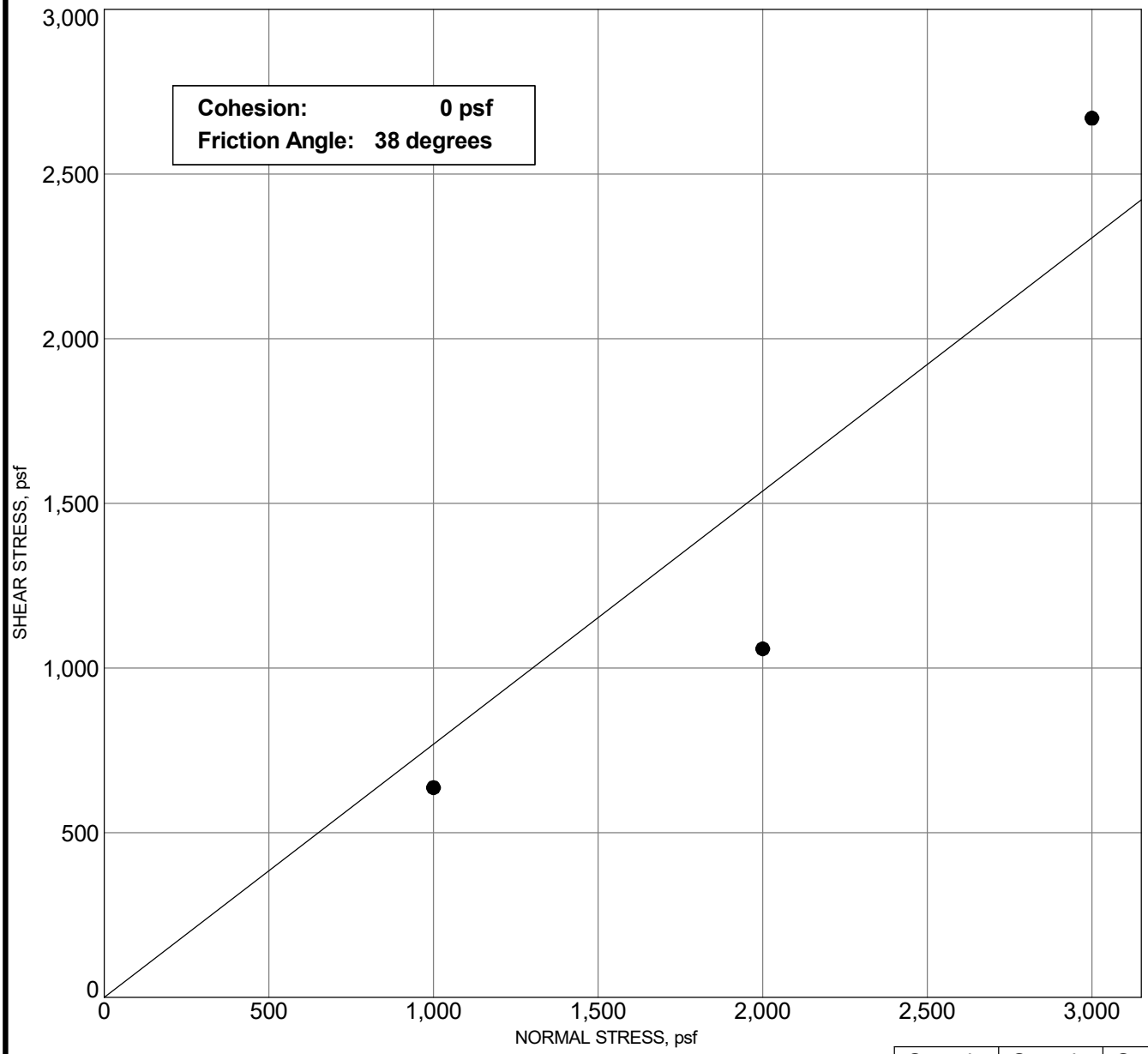

		Sample #1	Sample #2	Sample #3
INITIAL	Moisture Content, %	14.1	17.3	17.5
	Dry Density, pcf	68.5	73.2	71.8
	Height, inches	1.00	1.00	1.00
FINAL	Moisture Content, %	49.2	46.4	45.1
	Dry Density, pcf	66.2	75.2	74.3
	Height, inches	1.035	0.974	0.967
	Diameter, inches	2.42	2.42	2.42
	Deformation Rate, inch/minute	0.0025	0.0023	0.0024
	Normal Stress, psf	**1000**	**2000**	**3000**
	Peak Shear Stress, psf	**637**	**1058**	**2669**
	Shear Displacement, inches	0.43	0.42	0.42

Sample: B-40
Depth: 5.0 - 6.5 feet
Description: Grayish brown sandy silt with traces of fine gravel

GEOLABS, INC.
GEOTECHNICAL ENGINEERING

W.O. 7932-00

DIRECT SHEAR TEST - ASTM D3080

DHHL PULEHUNUI WASTEWATER SYSTEM
PULEHUNUI, MAUI, HAWAII

Plate
B - 18

G_DIRECT_SHEAR_7932-00.GPJ GEOLABS.GDT 11/25/19

Location	Depth	Length	Diameter	Length/ Diameter Ratio	Density	Load	Compressive Strength
	(feet)	(inches)	(inches)		(pcf)	(lbs)	(psi)
B-4	13 - 13.5	4.770	2.410	1.98	149.3	35,120	7,700
B-5	17.5 - 18	4.730	2.390	1.98	152.2	20,020	4,460
B-6	14 - 14.5	6.470	3.250	1.99	135.2	47,280	5,700
B-6	20.5 - 21	6.550	3.250	2.02	161.6	50,000	6,030
B-8	7 - 7.5	4.760	2.390	1.99	160.5	28,500	6,350
B-8	14 - 14.5	4.750	2.400	1.98	164.0	21,120	4,670
B-8	16 - 16.5	4.760	2.410	1.98	168.5	41,160	9,020
B-8	24 - 24.5	4.760	2.410	1.98	142.3	13,760	3,020
B-9	7.5 - 8	4.750	2.420	1.96	165.7	45,300	9,850
B-9	8.5 - 9	4.750	2.400	1.98	145.7	25,380	5,610
B-9	16 - 16.5	4.740	2.400	1.98	147.9	13,460	2,980
B-9	23.5 - 24	4.720	2.400	1.97	164.5	47,500	10,500
B-10	24 - 24.5	6.510	3.240	2.01	132.0	29,800	3,610
B-10	27 - 27.5	6.530	3.240	2.02	143.1	32,320	3,920
B-12	22 - 22.5	4.740	2.410	1.97	161.1	28,040	6,150
B-13	20 - 20.5	4.750	2.410	1.97	164.0	26,100	5,720
B-13	24 - 24.5	4.750	2.400	1.98	143.0	18,740	4,140
B-13	29 - 29.5	4.750	2.400	1.98	156.6	16,820	3,720
B-13	32 - 32.5	4.760	2.400	1.98	163.9	30,700	6,790
B-14	22 - 22.5	6.460	3.300	1.96	154.5	44,440	5,200
B-14	25.5 - 26	6.500	3.230	2.01	162.5	69,600	8,490
B-14	30 - 30.5	6.540	3.250	2.01	154.3	49,000	5,910
B-14	35 - 35.5	6.540	3.230	2.02	164.7	60,440	7,380
B-14	45 - 45.5	6.530	3.260	2.00	150.9	62,920	7,540
B-15	15.5 - 16	6.360	3.234	1.97	164.1	55,700	6,780
B-20	7.5 - 8	6.520	3.300	1.98	162.1	70,980	8,300
B-21	10 - 10.5	6.560	3.280	2.00	168.4	85,640	10,140

ASTM D7012 (METHOD C)

GEOLABS, INC.
GEOTECHNICAL ENGINEERING

W.O. 7932-00

UNIAXIAL COMPRESSIVE STRENGTH TEST

DHHL PULEHUNUI WASTEWATER SYSTEM
PULEHUNUI, MAUI, HAWAII

Plate
B - 19

G ROCK UC TEST PORTRAIT 7932-00.GPJ GEOLABS.GDT 11/14/19

Location	Depth	Length	Diameter	Length/ Diameter Ratio	Density	Load	Compressive Strength
	(feet)	(inches)	(inches)		(pcf)	(lbs)	(psi)
B-21	15.5 - 16	6.510	3.240	2.01	179.9	96,260	11,680
B-22	11.5 - 12	6.530	3.270	2.00	181.0	148,840	17,720
B-23	23 - 23.5	6.570	3.250	2.02	176.7	92,300	11,130
B-24	16.5 - 17	6.530	3.240	2.02	180.6	134,240	16,280
B-25	16 - 16.5	6.480	3.230	2.01	177.9	83,460	10,190

ASTM D7012 (METHOD C)

GEOLABS, INC.
GEOTECHNICAL ENGINEERING

W.O. 7932-00

UNIAXIAL COMPRESSIVE STRENGTH TEST

DHHL PULEHUNUI WASTEWATER SYSTEM
PULEHUNUI, MAUI, HAWAII

Plate
B - 20

G ROCK UC TEST PORTRAIT 7932-00.GPJ GEOLABS.GDT 11/14/19

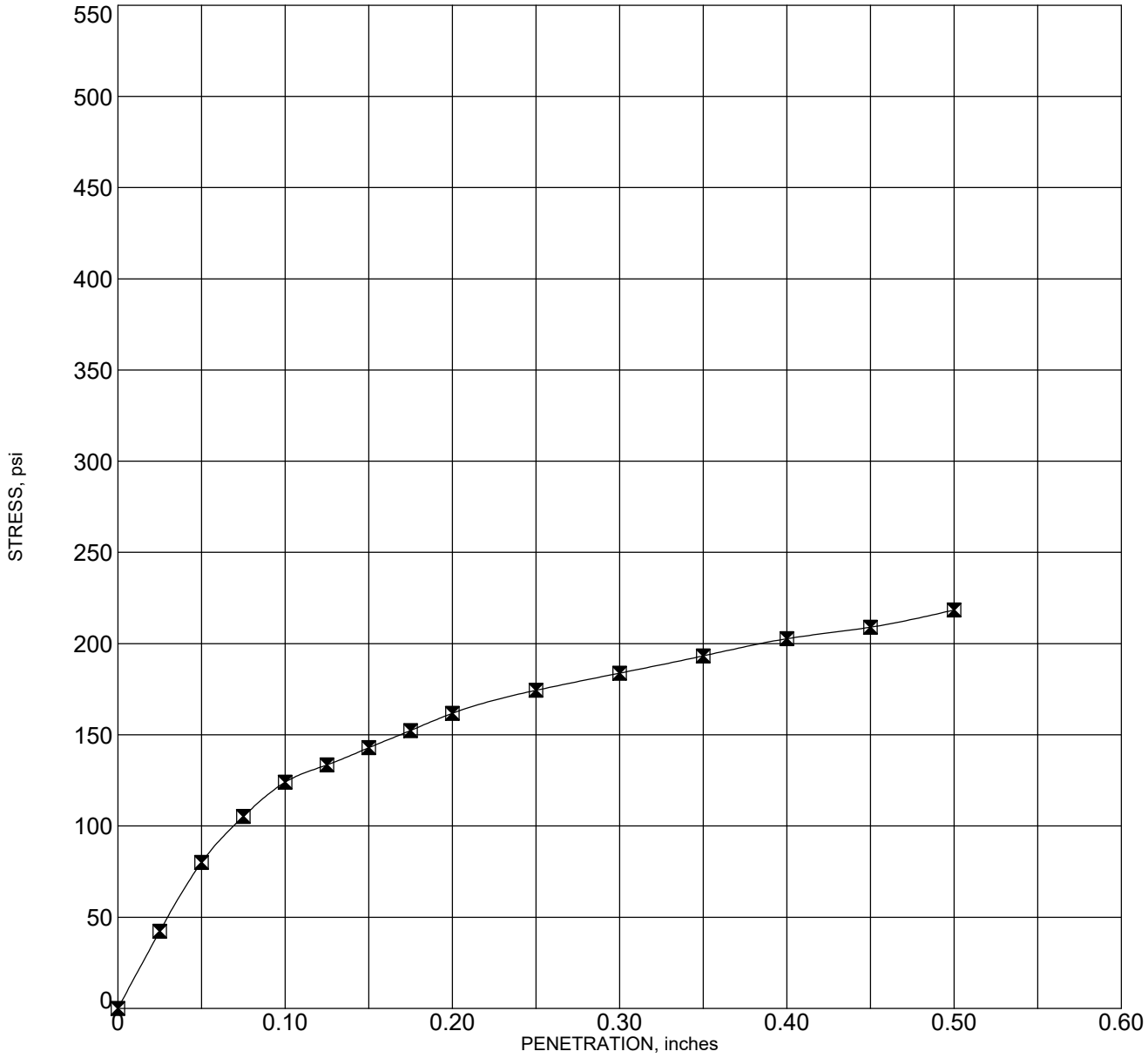

Corr. CBR @ 0.1"	12.4
Corr. CBR @ 0.2"	10.8
Swell (%)	0.07

Sample: BULK-1 (Composite)
Depth: 0.0 - 1.0 feet
Description: Light brown sandy silt with some gravel

Molding Dry Density (pcf)	109.8	Hammer Wt. (lbs)	10
Molding Moisture (%)	20.4	Hammer Drop (inches)	18
Days Soaked	4	No. of Blows	56
Aggregate	3/4 inch minus	No. of Layers	5

GEOLABS, INC.
GEOTECHNICAL ENGINEERING

W.O. 7932-00

CALIFORNIA BEARING RATIO - ASTM D1883

DHHL PULEHUNUI WASTEWATER SYSTEM
PULEHUNUI, MAUI, HAWAII

Plate
B - 21

G CBR 7932-00.GPJ GEOLABS.GDT 11/14/19

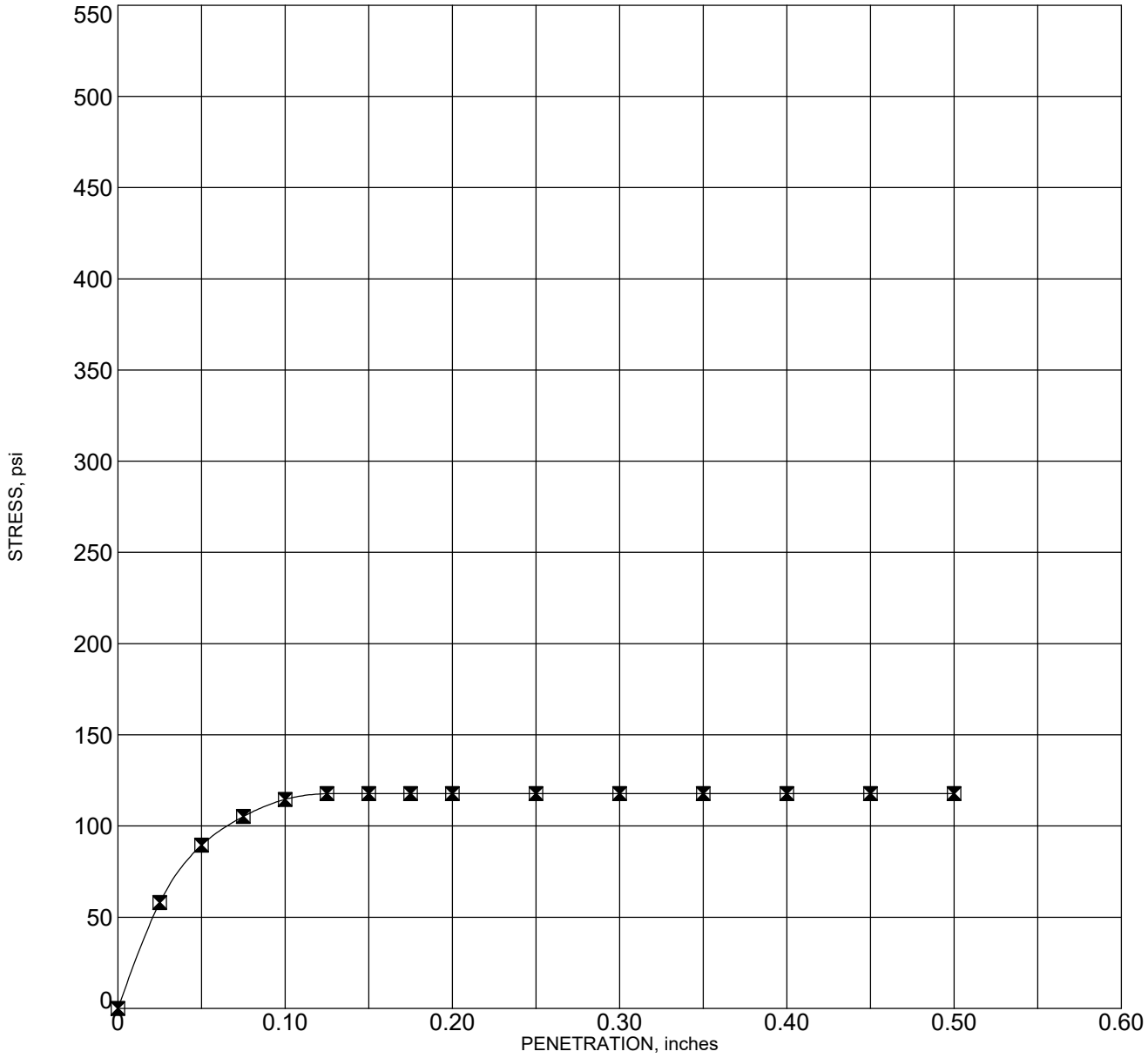

Corr. CBR @ 0.1"	11.5
Corr. CBR @ 0.2"	7.9
Swell (%)	0.26

Sample: BULK-2
Depth: 0.0 - 2.0 feet
Description: Brown sandy silt

Molding Dry Density (pcf)	98.6	Hammer Wt. (lbs)	10
Molding Moisture (%)	18.4	Hammer Drop (inches)	18
Days Soaked	4	No. of Blows	56
Aggregate	3/4 inch minus	No. of Layers	5

GEOLABS, INC.
GEOTECHNICAL ENGINEERING

W.O. 7932-00

CALIFORNIA BEARING RATIO - ASTM D1883

DHHL PULEHUNUI WASTEWATER SYSTEM
PULEHUNUI, MAUI, HAWAII

Plate
B - 22

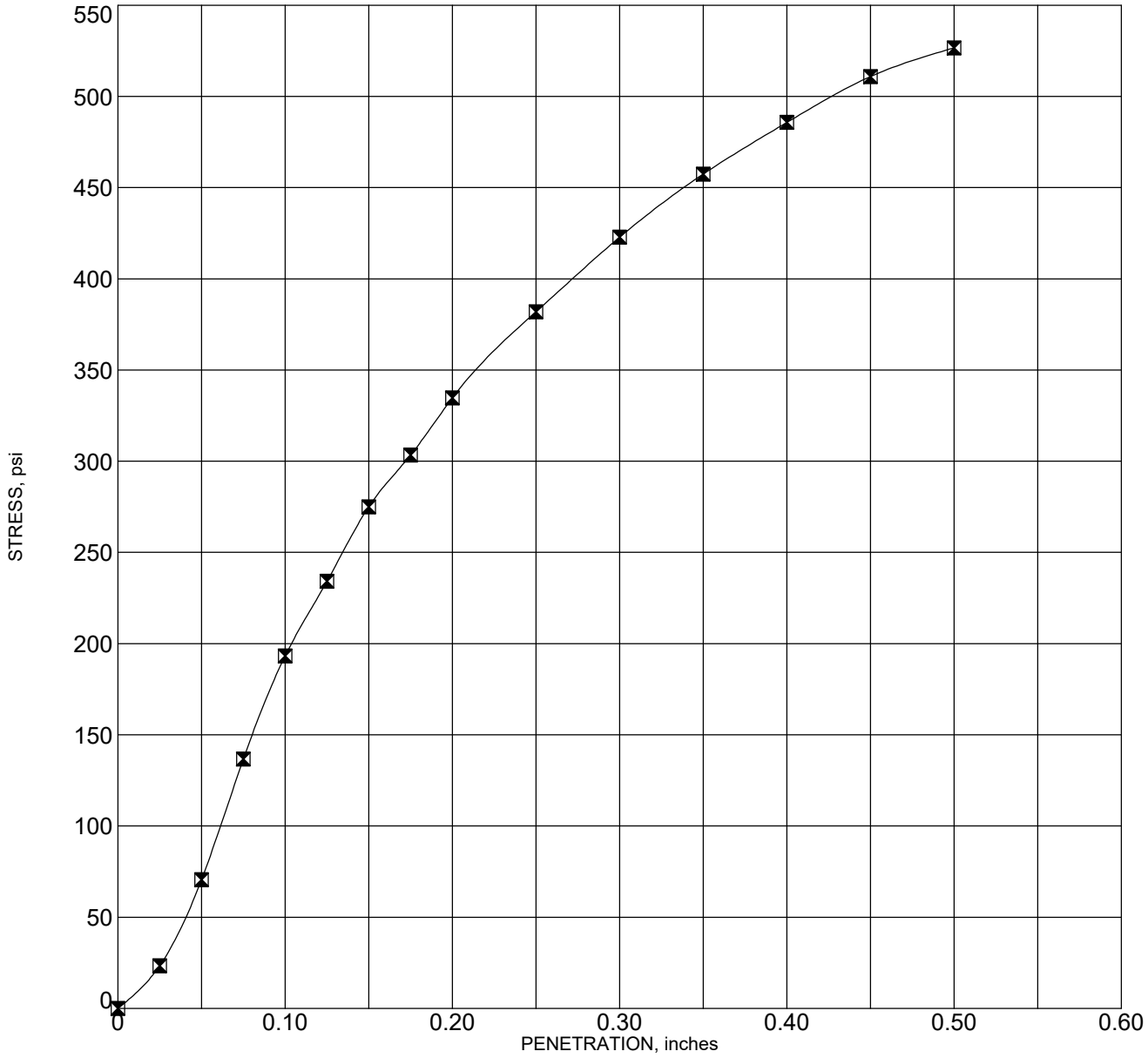

Corr. CBR @ 0.1"	23.1
Corr. CBR @ 0.2"	23.8
Swell (%)	0.55

Sample: BULK-3
Depth: 0.0 - 2.0 feet
Description: Reddish brown clayey silt with some sand

Molding Dry Density (pcf)	106.9	Hammer Wt. (lbs)	10
Molding Moisture (%)	18.5	Hammer Drop (inches)	18
Days Soaked	4	No. of Blows	56
Aggregate	3/4 inch minus	No. of Layers	5

GEOLABS, INC.
GEOTECHNICAL ENGINEERING
W.O. 7932-00

CALIFORNIA BEARING RATIO - ASTM D1883

DHHL PULEHUNUI WASTEWATER SYSTEM
PULEHUNUI, MAUI, HAWAII

Plate
B - 23

G CBR 7932-00.GPJ GEOLABS.GDT 11/14/19

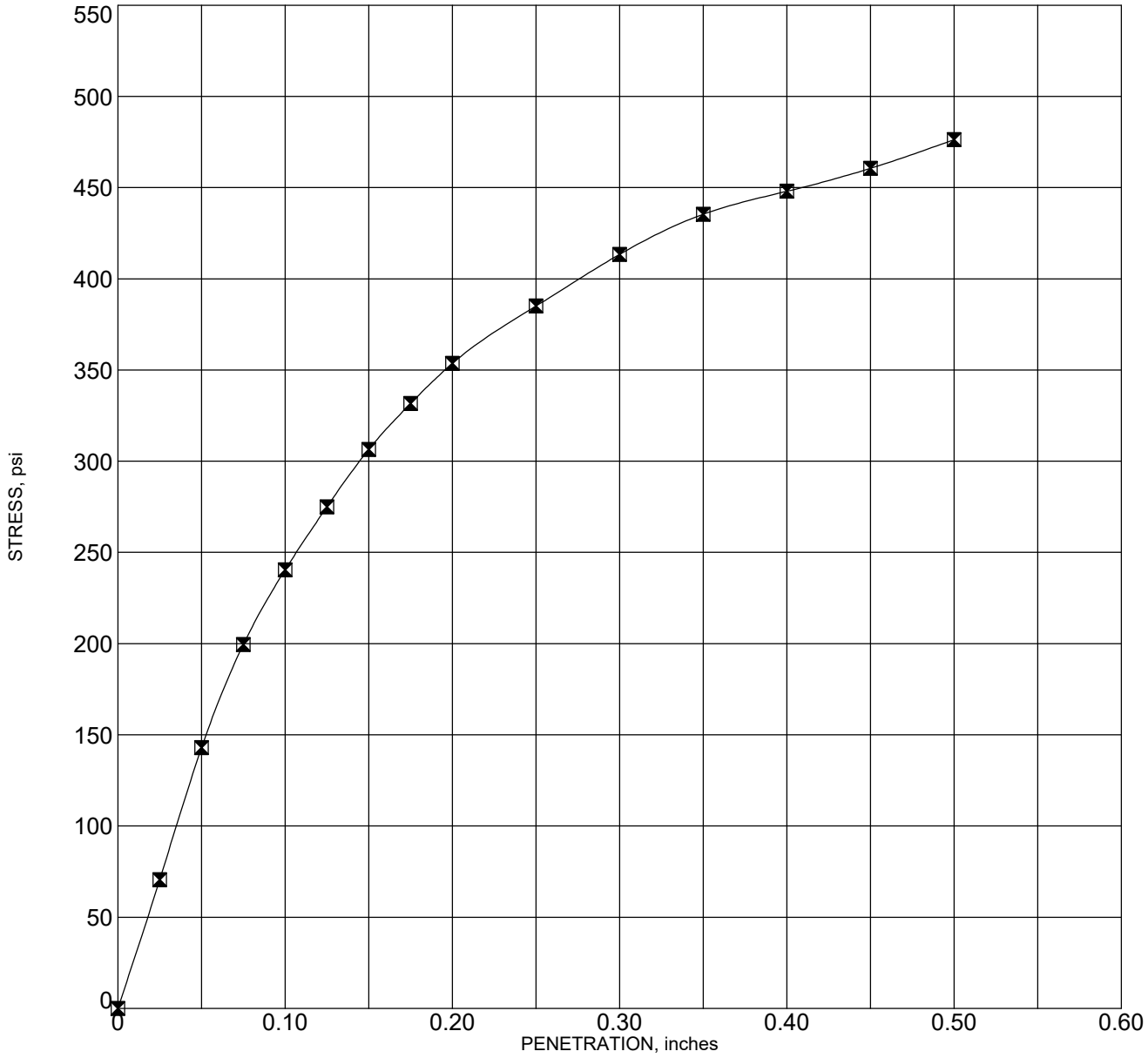

Corr. CBR @ 0.1"	24.0
Corr. CBR @ 0.2"	23.6
Swell (%)	0.39

Sample: BULK-4
Depth: 0.0 - 2.0 feet
Description: Reddish brown clayey silt with some sand

Molding Dry Density (pcf)	106.2	Hammer Wt. (lbs)	10
Molding Moisture (%)	17.4	Hammer Drop (inches)	18
Days Soaked	4	No. of Blows	56
Aggregate	3/4 inch minus	No. of Layers	5

GEOLABS, INC.
GEOTECHNICAL ENGINEERING
W.O. 7932-00

CALIFORNIA BEARING RATIO - ASTM D1883

DHHL PULEHUNUI WASTEWATER SYSTEM
PULEHUNUI, MAUI, HAWAII

Plate
B - 24

G CBR 7932-00.GPJ GEOLABS.GDT 11/14/19

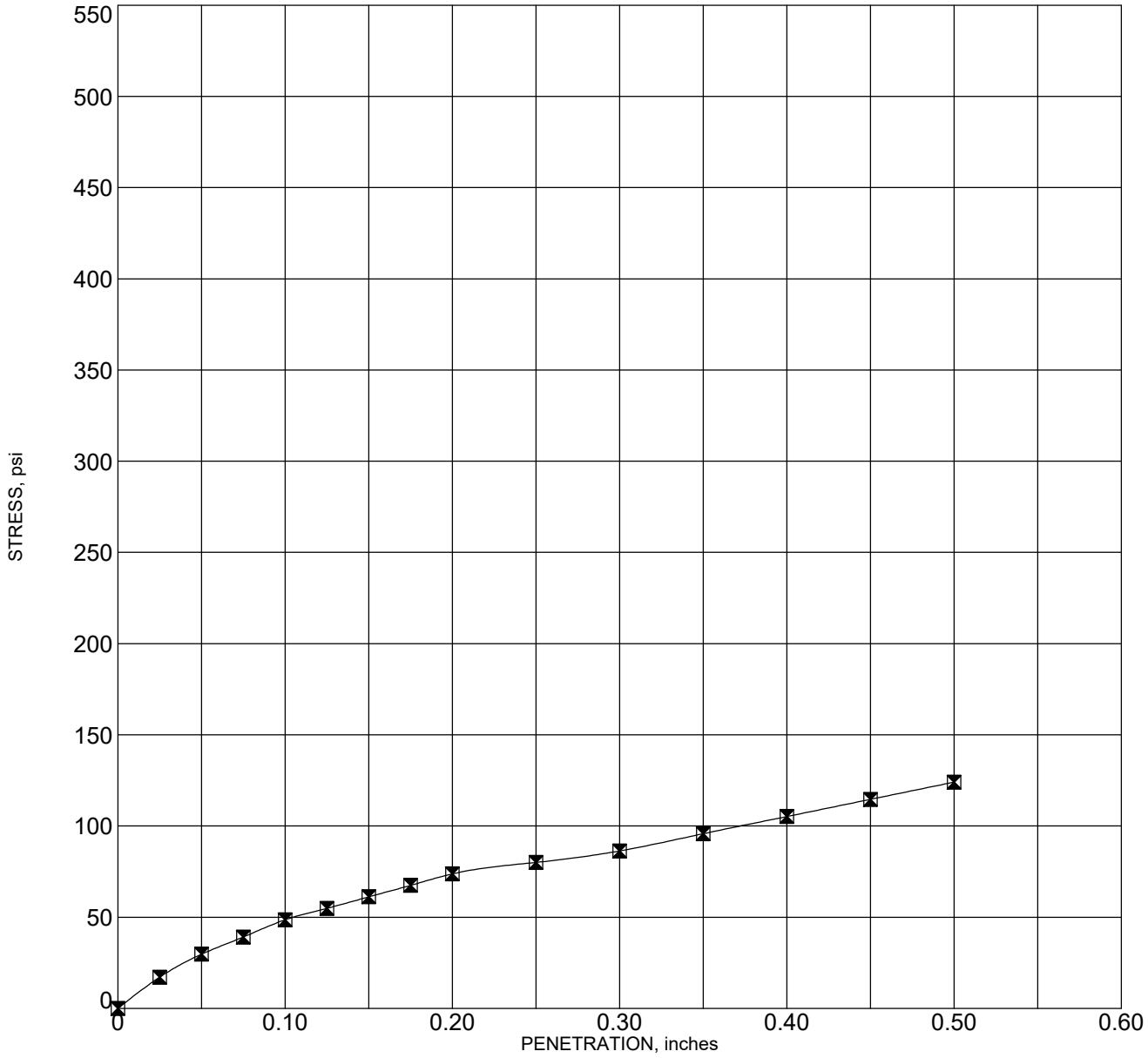

Corr. CBR @ 0.1"	4.9
Corr. CBR @ 0.2"	4.9
Swell (%)	0.52

Sample: BULK-5
Depth: 0.0 - 2.0 feet
Description: Reddish brown sandy silt

Molding Dry Density (pcf)	102.1	Hammer Wt. (lbs)	10
Molding Moisture (%)	17.9	Hammer Drop (inches)	18
Days Soaked	4	No. of Blows	56
Aggregate	3/4 inch minus	No. of Layers	5

GEOLABS, INC.
GEOTECHNICAL ENGINEERING
W.O. 7932-00

CALIFORNIA BEARING RATIO - ASTM D1883

DHHL PULEHUNUI WASTEWATER SYSTEM
PULEHUNUI, MAUI, HAWAII

Plate
B - 25

G CBR 7932-00.GPJ GEOLABS.GDT 11/14/19

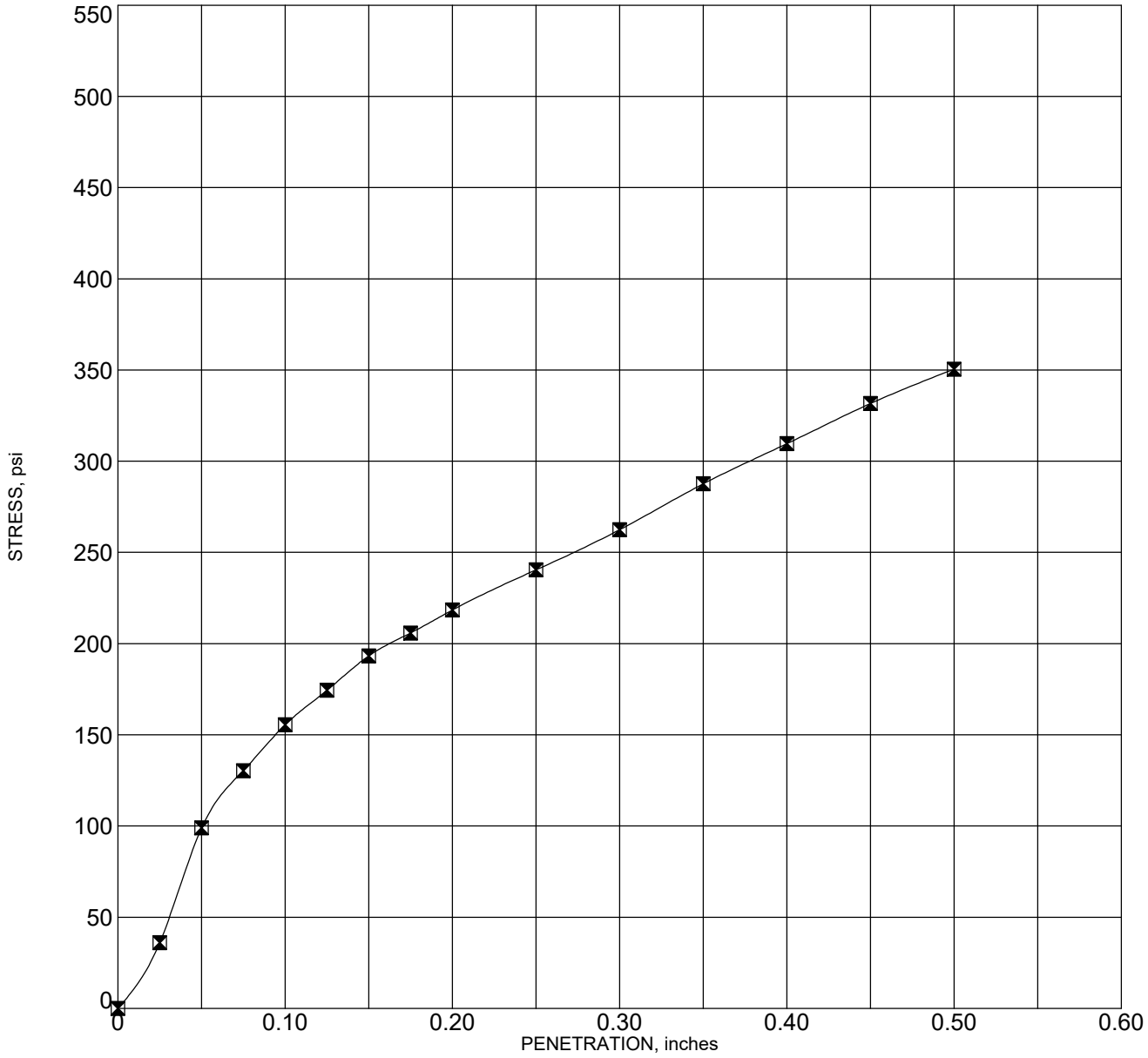

Corr. CBR @ 0.1"	16.4
Corr. CBR @ 0.2"	14.9
Swell (%)	1.07

Sample: BULK-6
Depth: 0.0 - 2.0 feet
Description: Reddish brown clayey silt with some sand

Molding Dry Density (pcf)	104.6	Hammer Wt. (lbs)	10
Molding Moisture (%)	20.6	Hammer Drop (inches)	18
Days Soaked	4	No. of Blows	56
Aggregate	3/4 inch minus	No. of Layers	5

GEOLABS, INC.
GEOTECHNICAL ENGINEERING
W.O. 7932-00

CALIFORNIA BEARING RATIO - ASTM D1883

DHHL PULEHUNUI WASTEWATER SYSTEM
PULEHUNUI, MAUI, HAWAII

Plate
B - 26

G CBR 7932-00.GPJ GEOLABS.GDT 11/14/19

APPENDIX C

B-1 15.0’ TO 20.0’

15.0’

20.0’

B-2 15.17’ TO 20.0’

15.17’

20.0’

B-3 10.1’ TO 20.0’

10.1’

20.0’

B-4 10.17’ TO 20.0’

10.17’

20.0’

B-5 15.5’ TO 25.0’

15.5’

25.0’

B-6 13.0’ TO 41.5’

13.0’ **21.5’** **26.5’** **36.5’**

21.5’ **26.5’** **36.5’** **41.5’**

B-7 15.1’ TO 20.0’

15.1’

20.0’

B-8 5.0’ TO 25.0’

5.0’ **15.0’**

15.0’ **25.0’**

B-9 6.5’ TO 25.0’

6.5’ **15.0’**

15.0’ **25.0’**

B-10 6.5’ TO 30.0’

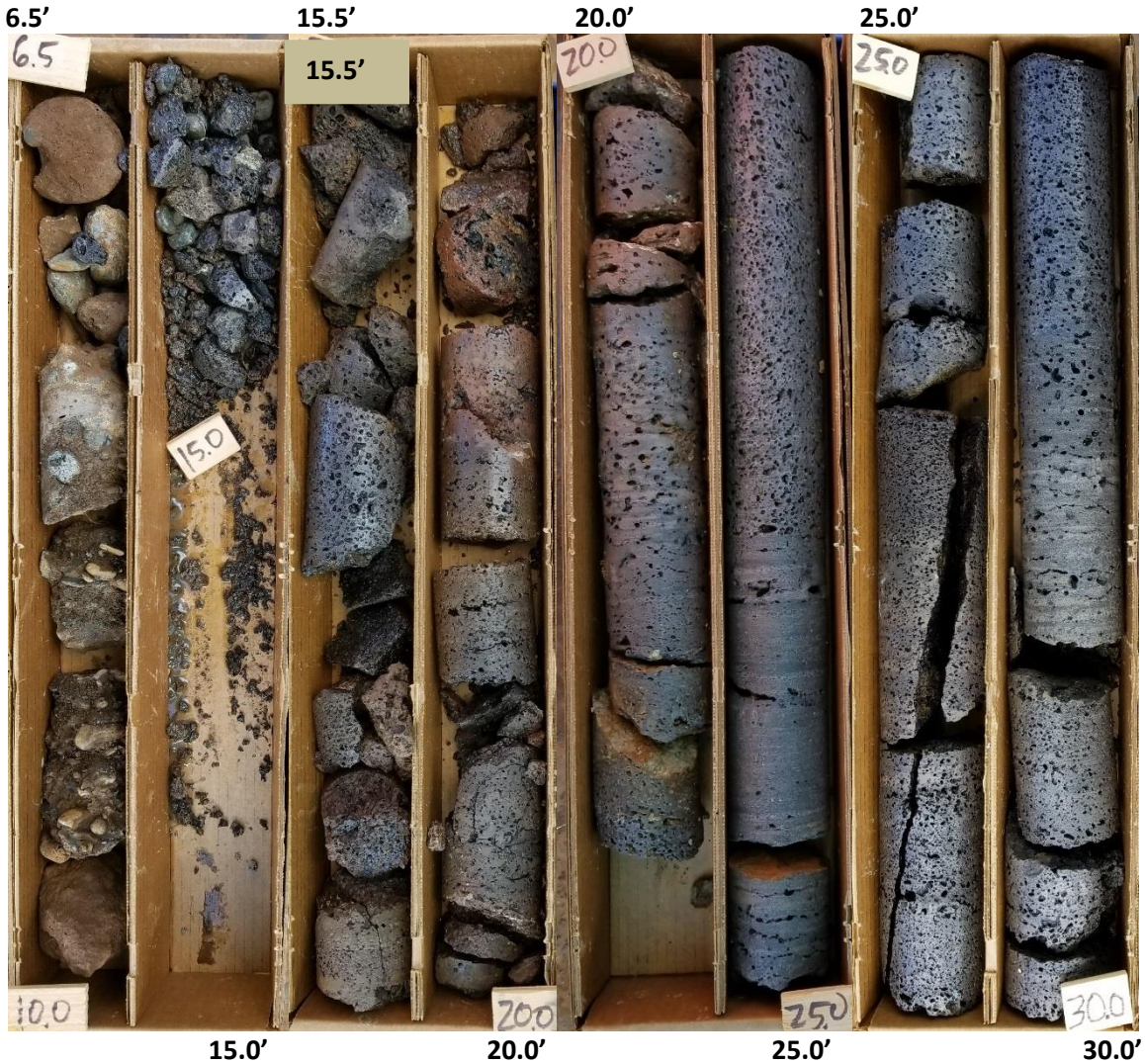

B-12 17.0’ TO 25.0’

17.0’

25.0’

B-13 13.0’ TO 41.5’

13.0’ **26.5’** **36.5’**

26.5’ **31.5’** **41.5’**

B-14 17.5’ TO 51.5’

17.5’ 26.5’ 31.5’ 36.5’ 41.5’ 46.5’

26.5’ 31.5’ 36.5’ 41.5’ 46.5’ 51.5’

B-15 15.0’ TO 20.0’

15.0’

20.0’

B-20 5.1’ TO 21.0’

5.1’ 6.0’ 11.0’ 16.0’

6.0’ 11.0’ 16.0’ 21.0’

B-21 5.75’ TO 21.5’

5.75’ **11.5’** **16.5’**

11.5’ **16.5’** **21.5’**

B-22 10.0’ TO 20.5’

B-23 2.5' TO 30.5'

2.5' **17.0'** **20.5'** **25.5'**

15.5' **20.5'** **25.5'** **30.5'**

B-24 14.5’ TO 30.5’

14.5’ **15.5’** **20.5’** **25.5’**

15.5’ **20.5’** **25.5’** **30.5’**

B-25 11.5’ TO 30.5’

11.5’ **15.5’** **20.5** **25.5’**

15.5’ **20.5’** **25.5’** **30.5’**

B-29 16.83’ TO 20.5’

16.83’

20.5’

B-30 7.0’ TO 21.0’

7.0’

21.0’

B-31 10.8’ TO 30.5’

10.8’ **15.5’** **20.5’** **25.5’**

15.5’ **20.5’** **25.5’** **30.5’**

B-33 12.0’ TO 30.5’

12.0’ **25.5’**

25.5’ **30.5’**

B-34 11.17’ TO 30.5’

11.17’ **20.5’** **25.5’**

20.5’ **25.5’** **30.5’**

B-40 27.0’ TO 50.5’

27.0’ 30.5’ 35.5’ 40.5’ 45.5’

30.5’ 35.5’ 40.5’ 45.5’ 50.5’

B-41 27.0’ TO 50.5’

27.0’ 31.5’ 35.5’ 40.5’ 45.5’

30.5’ 35.5’ 40.5’ 45.5’ 50.5’

APPENDIX D

INFILTRATION TEST RECORD

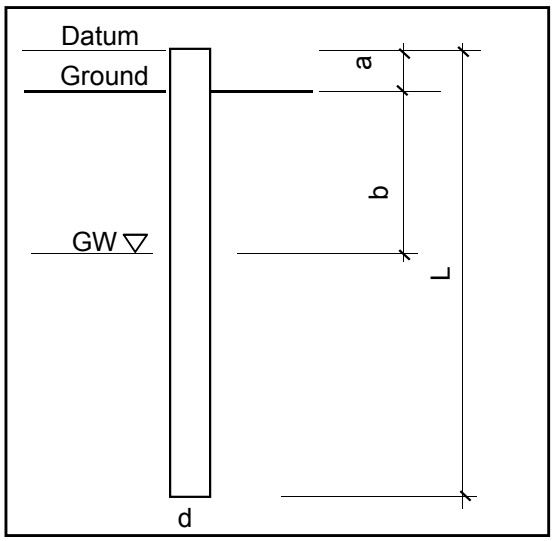

Project:	DHHL Pulehunui
W.O.:	7932-00
Test No.:	B-26
Date of Testing:	7/8/2019
Method of Testing:	BMP Falling Head (Flush Bottom)
Source of Water:	5 gallon bucket

GW level, b (from ground):	N/A	feet
Datum, a (above ground):	0.5	feet
Depth of Boring:	10.0	feet
Length, L (from datum):	10.5	feet
Diameter of Casing, d (I.D.):	4.0	inches

Testing Trial	Elapsed Time (minutes)	Time (hh:mm)	Depth to Water (measured from datum) (inches)	Percolation Rate (inches per hour)
Trial 1	0	14:05	105.00	
	15	14:20	105.00	
	30	14:35	106.00	
	45	14:50	106.00	
	60	15:05	106.00	1.00
Trial 2	0	15:05	105.00	
	15	15:20	105.00	
	30	15:35	105.00	
	45	15:50	106.00	
	60	16:05	106.00	1.00
Trial 3	0	16:05	105.00	
	15	16:20	105.00	
	30	16:35	106.00	
	45	16:50	106.00	
	60	17:05	106.00	1.00
Trial 4	0	17:05	105.00	
	15	17:20	105.00	
	30	17:35	105.00	
	45	17:50	105.00	
	60	18:05	106.00	1.00

INFILTRATION TEST RECORD

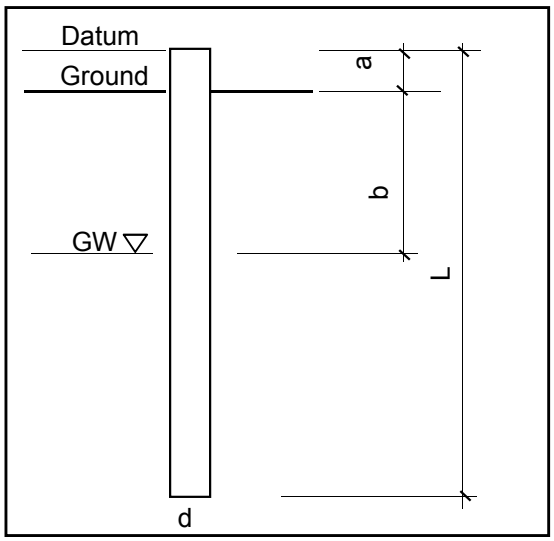

Project:	DHHL Pulehunui
W.O.:	7932-00
Test No.:	B-27
Date of Testing:	7/8/2019
Method of Testing:	BMP Falling Head (Flush Bottom)
Source of Water:	5 gallon bucket

GW level, b (from ground):	N/A	feet
Datum, a (above ground):	0.5	feet
Depth of Boring:	10.0	feet
Length, L (from datum):	10.5	feet
Diameter of Casing, d (I.D.):	4.0	inches

Testing Trial	Elapsed Time (minutes)	Time (hh:mm)	Depth to Water (measured from datum) (inches)	Percolation Rate (inches per hour)
Trial 1	0	14:00	102.00	
	15	14:15	102.50	
	30	14:30	102.50	
	45	14:45	102.60	
	60	15:00	102.67	0.67
Trial 2	0	15:01	102.00	
	15	15:16	102.17	
	30	15:31	102.25	
	45	15:46	102.42	
	60	16:01	102.50	0.50
Trial 3	0	16:02	102.00	
	15	16:17	102.17	
	30	16:32	102.33	
	45	16:47	102.42	
	60	17:02	102.50	0.50
Trial 4	0	17:03	102.00	
	15	17:18	102.09	
	30	17:33	102.17	
	45	17:48	102.33	
	60	18:03	102.33	0.33

INFILTRATION TEST RECORD

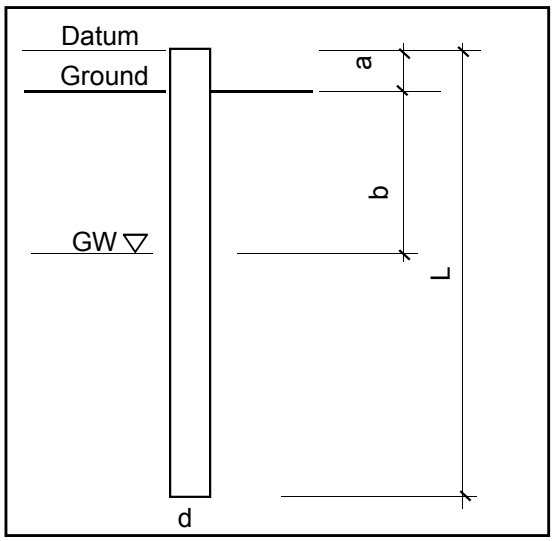

Project:	DHHL Pulehunui
W.O.:	7932-00
Test No.:	B-28
Date of Testing:	7/11/2019
Method of Testing:	BMP Falling Head (Flush Bottom)
Source of Water:	5 gallon bucket

GW level, b (from ground):	N/A	feet
Datum, a (above ground):	0.5	feet
Depth of Boring:	10.0	feet
Length, L (from datum):	10.5	feet
Diameter of Casing, d (I.D.):	4.0	inches

Testing Trial	Elapsed Time (minutes)	Time (hh:mm)	Depth to Water (measured from datum) (inches)	Percolation Rate (inches per hour)
Trial 1	0	9:00	102.00	
	15	9:15	102.00	
	30	9:30	102.00	
	45	9:45	102.00	
	60	10:00	102.00	0.00
Trial 2	0	10:00	102.00	
	15	10:15	102.00	
	30	10:30	102.00	
	45	10:45	102.00	
	60	11:00	102.00	0.00
Trial 3	0	11:00	102.00	
	15	11:15	102.00	
	30	11:30	102.00	
	45	11:45	102.00	
	60	12:00	102.00	0.00
Trial 4	0	12:00	102.00	
	15	12:15	102.00	
	30	12:30	102.00	
	45	12:45	102.00	
	60	13:00	102.00	0.00

INFILTRATION TEST RECORD

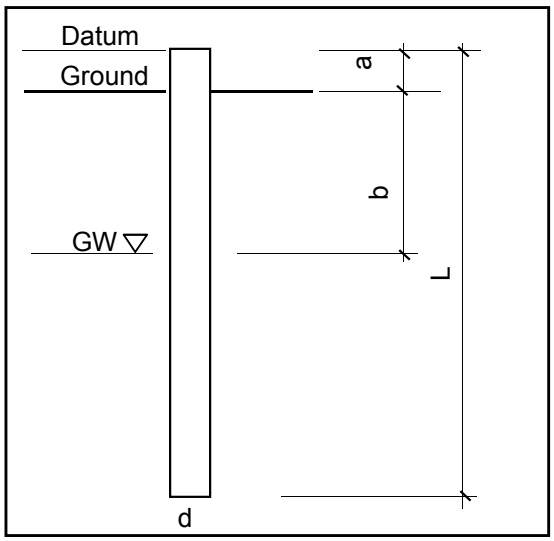

Project:	DHHL Pulehunui
W.O.:	7932-00
Test No.:	B-35
Date of Testing:	7/11/2019
Method of Testing:	BMP Falling Head (Flush Bottom)
Source of Water:	5 gallon bucket

GW level, b (from ground):	N/A	feet
Datum, a (above ground):	0.5	feet
Depth of Boring:	10.0	feet
Length, L (from datum):	10.5	feet
Diameter of Casing, d (I.D.):	4.0	inches

Testing Trial	Elapsed Time (minutes)	Time (hh:mm)	Depth to Water (measured from datum) (inches)	Percolation Rate (inches per hour)
Trial 1	0	9:00	102.00	
	15	9:15	102.09	
	30	9:30	102.17	
	45	9:45	102.17	
	60	10:00	102.25	0.25
Trial 2	0	10:00	102.00	
	15	10:15	102.00	
	30	10:30	102.09	
	45	10:45	102.09	
	60	11:00	102.09	0.09
Trial 3	0	11:00	102.00	
	15	11:15	102.00	
	30	11:30	102.00	
	45	11:45	102.09	
	60	12:00	102.09	0.09
Trial 4	0	12:00	102.00	
	15	12:15	102.00	
	30	12:30	102.00	
	45	12:45	102.00	
	60	13:00	102.00	0.00

INFILTRATION TEST RECORD

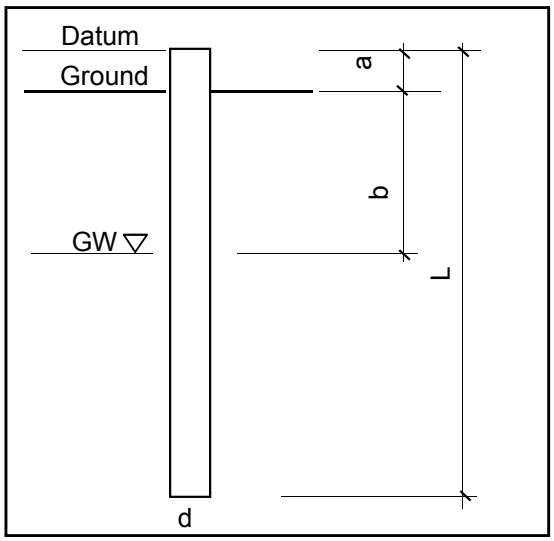

Project:	DHHL Pulehunui
W.O.:	7932-00
Test No.:	B-36
Date of Testing:	7/11/2019
Method of Testing:	BMP Falling Head (Flush Bottom)
Source of Water:	5 gallon bucket

GW level, b (from ground):	N/A	feet
Datum, a (above ground):	0.5	feet
Depth of Boring:	10.0	feet
Length, L (from datum):	10.5	feet
Diameter of Casing, d (I.D.):	4.0	inches

Testing Trial	Elapsed Time (minutes)	Time (hh:mm)	Depth to Water (measured from datum) (inches)	Percolation Rate (inches per hour)
Trial 1	0	8:30	102.00	
	15	8:45	102.00	
	30	9:00	102.25	
	45	9:15	102.25	
	60	9:30	102.25	0.25
Trial 2	0	9:30	102.00	
	15	9:45	102.00	
	30	10:00	102.08	
	45	10:15	102.08	
	60	10:30	102.08	0.08
Trial 3	0	10:30	102.00	
	15	10:45	102.00	
	30	11:00	102.00	
	45	11:15	102.08	
	60	11:30	102.08	0.08
Trial 4	0	11:30	102.00	
	15	11:45	102.00	
	30	12:00	102.00	
	45	12:15	102.08	
	60	12:30	102.08	0.08

INFILTRATION TEST RECORD

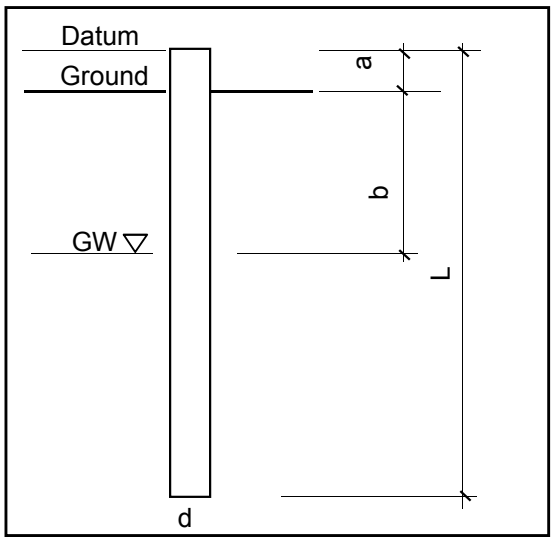

Project:	DHHL Pulehunui
W.O.:	7932-00
Test No.:	B-37
Date of Testing:	7/11/2019
Method of Testing:	BMP Falling Head (Flush Bottom)
Source of Water:	5 gallon bucket

GW level, b (from ground):	N/A	feet
Datum, a (above ground):	0.5	feet
Depth of Boring:	10.0	feet
Length, L (from datum):	10.5	feet
Diameter of Casing, d (I.D.):	4.0	inches

Testing Trial	Elapsed Time (minutes)	Time (hh:mm)	Depth to Water (measured from datum) (inches)	Percolation Rate (inches per hour)
Trial 1	0	8:20	102.00	
	15	8:35	102.00	
	30	8:50	102.00	
	45	9:05	102.00	
	60	9:20	102.00	0.00
Trial 2	0	9:20	102.00	
	15	9:35	102.00	
	30	9:50	102.00	
	45	10:05	102.00	
	60	10:20	102.00	0.00
Trial 3	0	10:20	102.00	
	15	10:35	102.00	
	30	10:50	102.00	
	45	11:05	102.00	
	60	11:20	102.00	0.00
Trial 4	0	11:20	102.00	
	15	11:35	102.00	
	30	11:50	102.00	
	45	12:05	102.00	
	60	12:20	102.00	0.00

GEOLABS, INC.

Geotechnical Engineering and Drilling Services

December 4, 2019
W.O. 7932-00(Amendment)

Ms. Adrienne Wong
Austin, Tsutsumi & Associates, Inc.
1871 Wili Pa Loop, Suite A
Wailuku, HI 96793

Subject: Amendment to Geotechnical Report
Corrected Field Infiltration Test Results
DHHL Pulehunui Wastewater System
Pulehunui, Maui, Hawaii

Reference: Report by Geolabs, Inc. dated November 25, 2019
entitled "Geotechnical Engineering Exploration
DHHL Pulehunui Wastewater System
Pulehunui, Maui, Hawaii"

Dear **Ms. Wong:**

This amendment consists of corrected field infiltration test results for the above project. The "Field Infiltration Test Results" table on Page 44 of our report entitled "Geotechnical Engineering Exploration, DHHL Pulehunui Wastewater System, Pulehunui, Maui, Hawaii," dated November 25, 2019, has been updated and is presented below. Detailed information of the tests is presented on the attached sheets.

FIELD INFILTRATION TEST RESULTS			
Package	**Test Location**	**Test Depth** (feet)	**Infiltration Rate** (inches/hour)
E	B-26	10.0	1.0
	B-27	10.0	4.0
	B-28	10.0	0.0
F	B-35	9.9	0.0
	B-36	10.0	1.0
	B-37	10.0	0.0

2006 Kalihi Street • Honolulu, Hawaii 96819
Phone: (808) 841-5064 • Facsimile: (808) 847-1749 • E-mail: hawaii@geolabs.net

Hawaii • California

Based on the infiltration testing, the subsurface soils at the depths and locations of our tests generally exhibited infiltration rates ranging from about 0 to 4.0 inches per hour. Based on the infiltration test results, we recommend that design infiltration rates of 1.0 inch per hour and less than 0.5 inches per hour be used for Packages E and F, respectively.

It should be noted that the infiltration values presented above are the rates of infiltration through the soil exposed at the bottoms of a 4-inch diameter borehole, which may not represent the actual infiltration condition within the entire infiltration basin footprint. Due to the variability of the subsurface conditions, the infiltration capacity of the selected storm water disposal system should be confirmed by conducting additional infiltration tests during construction.

We appreciate the opportunity to be of continued service to you on this project. If you have questions or need additional information, please contact our office.

Respectfully submitted,

GEOLABS, INC.

By _____
Gerald Y. Seki, P.E.
Vice President

GERALD Y. SEKI
LICENSED PROFESSIONAL ENGINEER
No. 5635-C
HAWAII, U.S.A.

THIS WORK WAS PREPARED BY ME OR UNDER MY SUPERVISION.

SIGNATURE 4-30-20
EXPIRATION DATE OF THE LICENSE

GS:NK:as

Attachment: Infiltration Test Records (6 Sheets)

h:\7900Series\7932-00.nk1.amd

INFILTRATION TEST RECORD

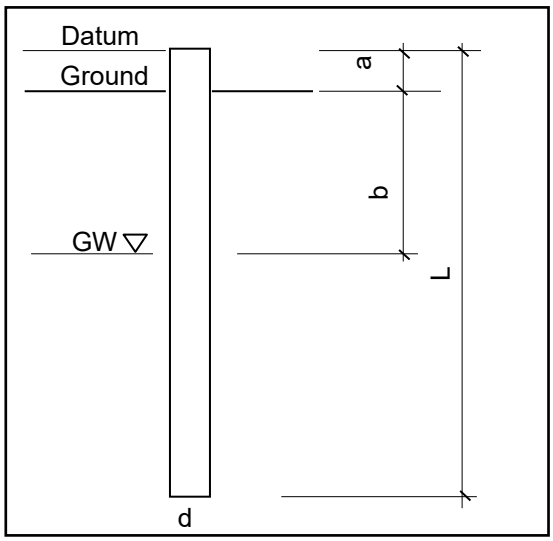

Project:	DHHL Pulehunui	
W.O.:	7932-00	
Test No.:	B-26	
Date of Testing:	7/8/2019	
Method of Testing:	BMP Falling Head (Flush Bottom)	
Source of Water:	5 gallon bucket	
GW level, b (from ground):	N/A	feet
Datum, a (above ground):	0.5	feet
Depth of Boring:	10.0	feet
Length, L (from datum):	10.5	feet
Diameter of Casing, d (I.D.):	4.0	inches

Testing Trial	Elapsed Time (minutes)	Time (hh:mm)	Depth to Water (measured from datum) (inches)	Percolation Rate (inches per hour)
Trial 1	0	14:05	105.00	
	15	14:20	105.00	
	30	14:35	106.00	
	45	14:50	106.00	
	60	15:05	106.00	1.00
Trial 2	0	15:05	105.00	
	15	15:20	105.00	
	30	15:35	105.00	
	45	15:50	106.00	
	60	16:05	106.00	1.00
Trial 3	0	16:05	105.00	
	15	16:20	105.00	
	30	16:35	106.00	
	45	16:50	106.00	
	60	17:05	106.00	1.00
Trial 4	0	17:05	105.00	
	15	17:20	105.00	
	30	17:35	105.00	
	45	17:50	105.00	
	60	18:05	106.00	1.00

INFILTRATION TEST RECORD

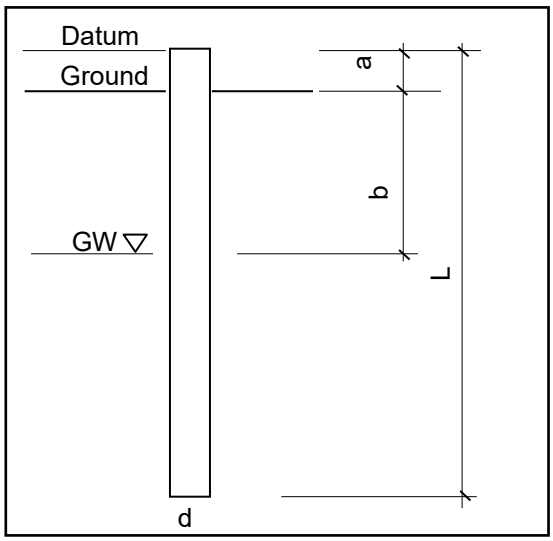

Project:	DHHL Pulehunui
W.O.:	7932-00
Test No.:	B-27
Date of Testing:	7/8/2019
Method of Testing:	BMP Falling Head (Flush Bottom)
Source of Water:	5 gallon bucket

GW level, b (from ground):	N/A	feet
Datum, a (above ground):	0.3	feet
Depth of Boring:	10.0	feet
Length, L (from datum):	10.3	feet
Diameter of Casing, d (I.D.):	4.0	inches

Testing Trial	Elapsed Time (minutes)	Time (hh:mm)	Depth to Water (measured from datum) (inches)	Percolation Rate (inches per hour)
Trial 1	0	14:00	100.00	
	15	14:15	106.00	
	30	14:30	106.00	
	45	14:45	107.00	
	60	15:00	108.00	8.00
Trial 2	0	15:01	100.00	
	15	15:16	102.00	
	30	15:31	103.00	
	45	15:46	105.00	
	60	16:01	106.00	6.00
Trial 3	0	16:02	100.00	
	15	16:17	102.00	
	30	16:32	104.00	
	45	16:47	105.00	
	60	17:02	106.00	6.00
Trial 4	0	17:03	100.00	
	15	17:18	101.00	
	30	17:33	102.00	
	45	17:48	104.00	
	60	18:03	104.00	4.00

INFILTRATION TEST RECORD

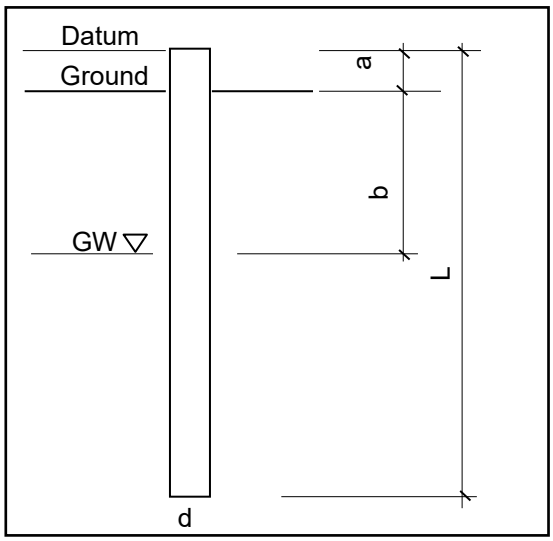

Project:	DHHL Pulehunui
W.O.:	7932-00
Test No.:	B-28
Date of Testing:	7/11/2019
Method of Testing:	BMP Falling Head (Flush Bottom)
Source of Water:	5 gallon bucket

GW level, b (from ground):	N/A	feet
Datum, a (above ground):	0.3	feet
Depth of Boring:	10.0	feet
Length, L (from datum):	10.3	feet
Diameter of Casing, d (I.D.):	4.0	inches

Testing Trial	Elapsed Time (minutes)	Time (hh:mm)	Depth to Water (measured from datum) (inches)	Percolation Rate (inches per hour)
Trial 1	0	9:00	98.00	
	15	9:15	98.00	
	30	9:30	98.00	
	45	9:45	98.00	
	60	10:00	98.00	0.00
Trial 2	0	10:00	98.00	
	15	10:15	98.00	
	30	10:30	98.00	
	45	10:45	98.00	
	60	11:00	98.00	0.00
Trial 3	0	11:00	98.00	
	15	11:15	98.00	
	30	11:30	98.00	
	45	11:45	98.00	
	60	12:00	98.00	0.00
Trial 4	0	12:00	98.00	
	15	12:15	98.00	
	30	12:30	98.00	
	45	12:45	98.00	
	60	13:00	98.00	0.00

INFILTRATION TEST RECORD

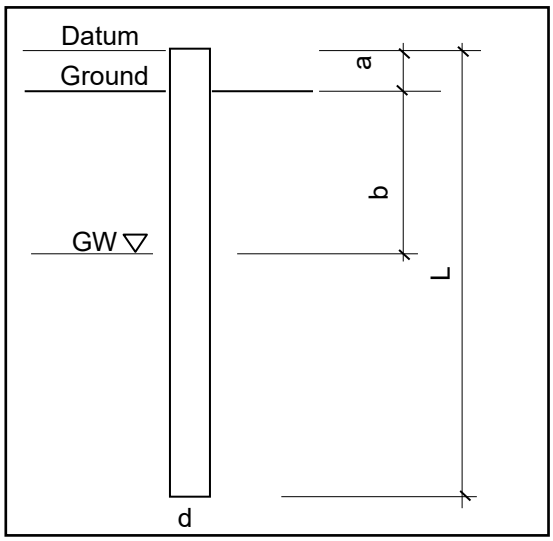

Project:	DHHL Pulehunui
W.O.:	7932-00
Test No.:	B-35
Date of Testing:	7/11/2019
Method of Testing:	BMP Falling Head (Flush Bottom)
Source of Water:	5 gallon bucket

GW level, b (from ground):	N/A	feet
Datum, a (above ground):	0.0	feet
Depth of Boring:	9.9	feet
Length, L (from datum):	9.9	feet
Diameter of Casing, d (I.D.):	4.0	inches

Testing Trial	Elapsed Time (minutes)	Time (hh:mm)	Depth to Water (measured from datum) (inches)	Percolation Rate (inches per hour)
Trial 1	0	9:00	94.00	
	15	9:15	95.00	
	30	9:30	96.00	
	45	9:45	96.00	
	60	10:00	97.00	3.00
Trial 2	0	10:00	94.00	
	15	10:15	94.00	
	30	10:30	95.00	
	45	10:45	95.00	
	60	11:00	95.00	1.00
Trial 3	0	11:00	94.00	
	15	11:15	94.00	
	30	11:30	94.00	
	45	11:45	95.00	
	60	12:00	95.00	1.00
Trial 4	0	12:00	94.00	
	15	12:15	94.00	
	30	12:30	94.00	
	45	12:45	94.00	
	60	13:00	94.00	0.00

INFILTRATION TEST RECORD

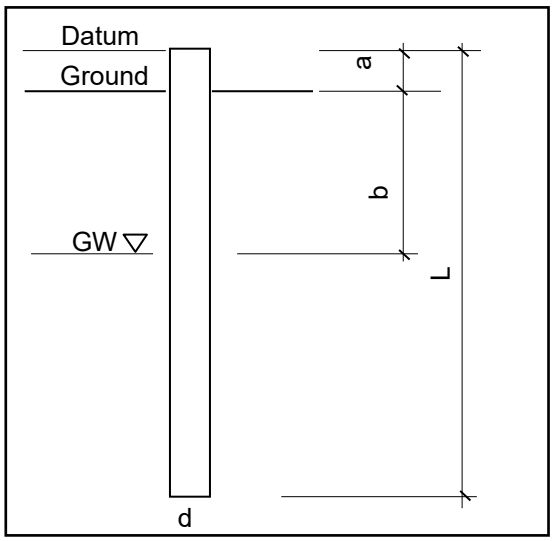

Project:	DHHL Pulehunui	
W.O.:	7932-00	
Test No.:	B-36	
Date of Testing:	7/11/2019	
Method of Testing:	BMP Falling Head (Flush Bottom)	
Source of Water:	5 gallon bucket	
GW level, b (from ground):	N/A	feet
Datum, a (above ground):	0.3	feet
Depth of Boring:	10.0	feet
Length, L (from datum):	10.3	feet
Diameter of Casing, d (I.D.):	4.0	inches

Testing Trial	Elapsed Time (minutes)	Time (hh:mm)	Depth to Water (measured from datum) (inches)	Percolation Rate (inches per hour)
Trial 1	0	8:30	99.00	
	15	8:45	99.00	
	30	9:00	102.00	
	45	9:15	102.00	
	60	9:30	102.00	3.00
Trial 2	0	9:30	99.00	
	15	9:45	99.00	
	30	10:00	99.00	
	45	10:15	99.00	
	60	10:30	99.00	0.00
Trial 3	0	10:30	99.00	
	15	10:45	99.00	
	30	11:00	99.00	
	45	11:15	100.00	
	60	11:30	100.00	1.00
Trial 4	0	11:30	99.00	
	15	11:45	99.00	
	30	12:00	99.00	
	45	12:15	100.00	
	60	12:30	100.00	1.00

INFILTRATION TEST RECORD

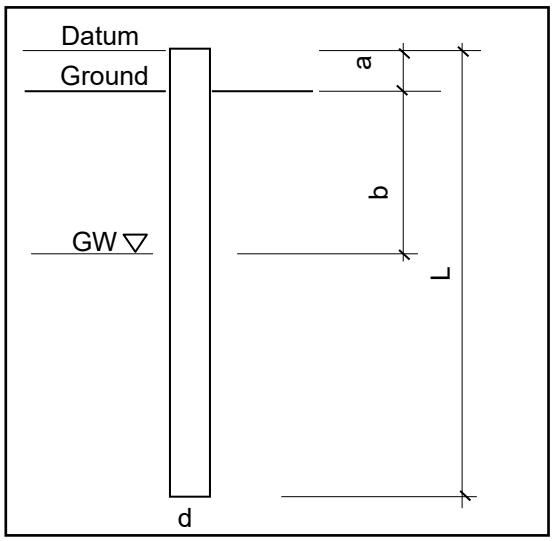

Project:	DHHL Pulehunui
W.O.:	7932-00
Test No.:	B-37
Date of Testing:	7/11/2019
Method of Testing:	BMP Falling Head (Flush Bottom)
Source of Water:	5 gallon bucket

GW level, b (from ground):	N/A	feet
Datum, a (above ground):	0.3	feet
Depth of Boring:	10.0	feet
Length, L (from datum):	10.3	feet
Diameter of Casing, d (I.D.):	4.0	inches

Testing Trial	Elapsed Time (minutes)	Time (hh:mm)	Depth to Water (measured from datum) (inches)	Percolation Rate (inches per hour)
Trial 1	0	8:20	98.00	
	15	8:35	98.00	
	30	8:50	98.00	
	45	9:05	98.00	
	60	9:20	98.00	0.00
Trial 2	0	9:20	98.00	
	15	9:35	98.00	
	30	9:50	98.00	
	45	10:05	98.00	
	60	10:20	98.00	0.00
Trial 3	0	10:20	98.00	
	15	10:35	98.00	
	30	10:50	98.00	
	45	11:05	98.00	
	60	11:20	98.00	0.00
Trial 4	0	11:20	98.00	
	15	11:35	98.00	
	30	11:50	98.00	
	45	12:05	98.00	
	60	12:20	98.00	0.00