Plot date: 15-Apr-2020

Full Size Plot

# NANAKULI FLOOD CONTROL CHANNEL IMPROVEMENTS

FOR
DEPARTMENT OF HAWAIIAN HOME LANDS
STATE OF HAWAII

NANAKULI VALLEY, OAHU, HAWAII
TAX MAP KEY: 0–0–000:000

| REVISION NO. | DATE | REVISIONS | BY |
|---|---|---|---|
| | | | |

ATHER R. DAR
LICENSED PROFESSIONAL ENGINEER
No. 7808-S
HAWAII U.S.A.
Exp. Date: 4-30-20

THIS WORK WAS PREPARED BY ME OR UNDER MY SUPERVISION AND CONSTRUCTION OF THIS PROJECT WILL BE UNDER MY OBSERVATION

DEPARTMENT OF HAWAIIAN HOMELAND

NANAKULI FLOOD CONTROL
CHANNEL IMPROVEMENTS
NANAKULI VALLEY, OAHU HAWAII

COVER SHEET

| | |
|---|---|
| DESIGNED BY: | TTP |
| DRAWN BY: | AK, AP, DL |
| CHECKED BY: | AD |
| SUPV: | |
| DATE: | 03/05/2019 |

HAWAII ENGINEERING GROUP, Inc.
Civil & Structural Engineers
1088 BISHOP STREET #2506
HONOLULU, HI 96813
Tel: 808-533-2092

JOB NO.

SHEET
T001
1 OF 225 SHTS

FILE ___ ___ DRAWER ___ ___ ___ FOLDER ___ ___

Plot date: 15-Apr-2020

Full Size Plot

# INDEX OF DRAWINGS

| COUNT | SHEET NUMBER | SHEET TITLE |
|---|---|---|
| **GENERAL** | | |
| 1 | T001 | COVER SHEET |
| 2 | T002 | MAPS & INDEX OF DRAWINGS |
| 3 | T003 | SITE PLAN AT GRID 0 TO 49 |
| 4 | T004 | SITE PLAN AT GRID 49 TO 83 |
| 5 | T005 | SITE PLAN AT GRID 83 TO 131 |
| 6 | T006 | SITE PLAN AT GRID 131 TO 159 |
| 7 | T007 | SITE PLAN AT GRID 159 TO 177 |
| **CIVIL** | | |
| 8 | C001 | CHANNEL SEGMENT 001 REPAIR DETAILS |
| 9 | C002 | CHANNEL SEGMENT 002 REPAIR DETAILS |
| 10 | C003 | CHANNEL SEGMENT 003 REPAIR DETAILS |
| 11 | C004 | CHANNEL SEGMENT 004 REPAIR DETAILS |
| 12 | C005 | CHANNEL SEGMENT 005 REPAIR DETAILS |
| 13 | C006 | CHANNEL SEGMENT 006 REPAIR DETAILS |
| 14 | C007 | CHANNEL SEGMENT 007 REPAIR DETAILS |
| 15 | C008 | CHANNEL SEGMENT 008 REPAIR DETAILS |
| 16 | C009 | CHANNEL SEGMENT 009 REPAIR DETAILS |
| 17 | C010 | CHANNEL SEGMENT 010 REPAIR DETAILS |
| 18 | C011 | CHANNEL SEGMENT 011 REPAIR DETAILS |
| 19 | C012 | CHANNEL SEGMENT 012 REPAIR DETAILS |
| 20 | C013 | CHANNEL SEGMENT 013 REPAIR DETAILS |
| 21 | C014 | CHANNEL SEGMENT 014 REPAIR DETAILS |
| 22 | C015 | CHANNEL SEGMENT 015 REPAIR DETAILS |
| 23 | C016 | CHANNEL SEGMENT 016 REPAIR DETAILS |
| 24 | C017 | CHANNEL SEGMENT 017 REPAIR DETAILS |
| 25 | C018 | CHANNEL SEGMENT 018 REPAIR DETAILS |
| 26 | C019 | CHANNEL SEGMENT 019 REPAIR DETAILS |
| 27 | C020 | CHANNEL SEGMENT 020 REPAIR DETAILS |
| 28 | C021 | CHANNEL SEGMENT 021 REPAIR DETAILS |
| 29 | C022 | CHANNEL SEGMENT 022 REPAIR DETAILS |
| 30 | C023 | CHANNEL SEGMENT 023 REPAIR DETAILS |
| 31 | C024 | CHANNEL SEGMENT 024 REPAIR DETAILS |
| 32 | C025 | CHANNEL SEGMENT 025 REPAIR DETAILS |
| 33 | C026 | CHANNEL SEGMENT 026 REPAIR DETAILS |
| 34 | C027 | CHANNEL SEGMENT 027 REPAIR DETAILS |
| 35 | C028 | CHANNEL SEGMENT 028 REPAIR DETAILS |
| 36 | C029 | CHANNEL SEGMENT 029 REPAIR DETAILS |
| 37 | C030 | CHANNEL SEGMENT 030 REPAIR DETAILS |
| 38 | C031 | CHANNEL SEGMENT 031 REPAIR DETAILS |
| 39 | C032 | CHANNEL SEGMENT 032 REPAIR DETAILS |
| 40 | C033 | CHANNEL SEGMENT 033 REPAIR DETAILS |
| 41 | C034 | CHANNEL SEGMENT 034 REPAIR DETAILS |
| 42 | C035 | CHANNEL SEGMENT 035 REPAIR DETAILS |
| 43 | C036 | CHANNEL SEGMENT 036 REPAIR DETAILS |
| 44 | C037 | CHANNEL SEGMENT 037 REPAIR DETAILS |
| 45 | C038 | CHANNEL SEGMENT 038 REPAIR DETAILS |
| 46 | C039 | CHANNEL SEGMENT 039 REPAIR DETAILS |
| 47 | C040 | CHANNEL SEGMENT 040 REPAIR DETAILS |
| 48 | C041 | CHANNEL SEGMENT 041 REPAIR DETAILS |
| 49 | C042 | CHANNEL SEGMENT 042 REPAIR DETAILS |
| 50 | C043 | CHANNEL SEGMENT 043 REPAIR DETAILS |
| 51 | C044 | CHANNEL SEGMENT 044 REPAIR DETAILS |
| 52 | C045 | CHANNEL SEGMENT 045 REPAIR DETAILS |
| 53 | C046 | CHANNEL SEGMENT 046 REPAIR DETAILS |
| 54 | C047 | CHANNEL SEGMENT 047 REPAIR DETAILS |
| 55 | C048 | CHANNEL SEGMENT 048 REPAIR DETAILS |
| 56 | C049 | CHANNEL SEGMENT 049 REPAIR DETAILS |
| 57 | C050 | CHANNEL SEGMENT 050 REPAIR DETAILS |
| 58 | C051 | CHANNEL SEGMENT 051 REPAIR DETAILS |
| 59 | C052 | CHANNEL SEGMENT 052 REPAIR DETAILS |
| 60 | C053 | CHANNEL SEGMENT 053 REPAIR DETAILS |
| 61 | C054 | CHANNEL SEGMENT 054 REPAIR DETAILS |
| 62 | C055 | CHANNEL SEGMENT 055 REPAIR DETAILS |
| 63 | C056 | CHANNEL SEGMENT 056 REPAIR DETAILS |
| 64 | C057 | CHANNEL SEGMENT 057 REPAIR DETAILS |
| 65 | C058 | CHANNEL SEGMENT 058 REPAIR DETAILS |
| 66 | C059 | CHANNEL SEGMENT 059 REPAIR DETAILS |
| 67 | C060 | CHANNEL SEGMENT 060 REPAIR DETAILS |
| 68 | C061 | CHANNEL SEGMENT 061 REPAIR DETAILS |
| 69 | C062 | CHANNEL SEGMENT 062 REPAIR DETAILS |
| 70 | C063 | CHANNEL SEGMENT 063 REPAIR DETAILS |
| 71 | C063R | CHANNEL SEGMENT 063R REPAIR DETAILS |
| 72 | C064 | CHANNEL SEGMENT 064 REPAIR DETAILS |
| 73 | C065 | CHANNEL SEGMENT 065 REPAIR DETAILS |
| 74 | C066 | CHANNEL SEGMENT 066 REPAIR DETAILS |
| 75 | C067 | CHANNEL SEGMENT 067 REPAIR DETAILS |
| 76 | C068 | CHANNEL SEGMENT 068 REPAIR DETAILS |
| 77 | C069 | CHANNEL SEGMENT 069 REPAIR DETAILS |
| 78 | C070 | CHANNEL SEGMENT 070 REPAIR DETAILS |
| 79 | C071 | CHANNEL SEGMENT 071 REPAIR DETAILS |
| 80 | C072 | CHANNEL SEGMENT 072 REPAIR DETAILS |
| 81 | C073 | CHANNEL SEGMENT 073 REPAIR DETAILS |
| 82 | C074 | CHANNEL SEGMENT 074 REPAIR DETAILS |
| 83 | C075 | CHANNEL SEGMENT 075 REPAIR DETAILS |
| 84 | C076 | CHANNEL SEGMENT 076 REPAIR DETAILS |
| 85 | C077 | CHANNEL SEGMENT 077 REPAIR DETAILS |
| 86 | C078 | CHANNEL SEGMENT 078 REPAIR DETAILS |
| 87 | C079 | CHANNEL SEGMENT 079 REPAIR DETAILS |
| 88 | C080 | CHANNEL SEGMENT 080 REPAIR DETAILS |
| 89 | C081 | CHANNEL SEGMENT 081 REPAIR DETAILS |
| 90 | C082 | CHANNEL SEGMENT 082 REPAIR DETAILS |
| 91 | C083 | CHANNEL SEGMENT 083 REPAIR DETAILS |
| 92 | C084 | CHANNEL SEGMENT 084 REPAIR DETAILS |
| 93 | C085 | CHANNEL SEGMENT 085 REPAIR DETAILS |
| 94 | C086 | CHANNEL SEGMENT 086 REPAIR DETAILS |
| 95 | C087 | CHANNEL SEGMENT 087 REPAIR DETAILS |
| 96 | C087R | CHANNEL SEGMENT 087R REPAIR DETAILS |
| 97 | C088 | CHANNEL SEGMENT 088 REPAIR DETAILS |
| 98 | C089 | CHANNEL SEGMENT 089 REPAIR DETAILS |
| 99 | C090 | CHANNEL SEGMENT 090 REPAIR DETAILS |
| 100 | C091 | CHANNEL SEGMENT 091 REPAIR DETAILS |
| 101 | C092 | CHANNEL SEGMENT 092 REPAIR DETAILS |
| 102 | C093 | CHANNEL SEGMENT 093 REPAIR DETAILS |
| 103 | C094 | CHANNEL SEGMENT 094 REPAIR DETAILS |
| 104 | C095 | CHANNEL SEGMENT 095 REPAIR DETAILS |
| 105 | C096 | CHANNEL SEGMENT 096 REPAIR DETAILS |
| 106 | C097 | CHANNEL SEGMENT 097 REPAIR DETAILS |
| 107 | C098 | CHANNEL SEGMENT 098 REPAIR DETAILS |
| 108 | C099 | CHANNEL SEGMENT 099 REPAIR DETAILS |
| 109 | C100 | CHANNEL SEGMENT 100 REPAIR DETAILS |
| 110 | C101 | CHANNEL SEGMENT 101 REPAIR DETAILS |
| 111 | C102 | CHANNEL SEGMENT 102 REPAIR DETAILS |
| 112 | C103 | CHANNEL SEGMENT 103 REPAIR DETAILS |
| 113 | C104 | CHANNEL SEGMENT 104 REPAIR DETAILS |
| 114 | C105 | CHANNEL SEGMENT 105 REPAIR DETAILS |
| 115 | C106 | CHANNEL SEGMENT 106 REPAIR DETAILS |
| 116 | C107 | CHANNEL SEGMENT 107 REPAIR DETAILS |
| 117 | C108 | CHANNEL SEGMENT 108 REPAIR DETAILS |
| 118 | C109 | CHANNEL SEGMENT 109 REPAIR DETAILS |
| 119 | C110 | CHANNEL SEGMENT 110 REPAIR DETAILS |
| 120 | C111 | CHANNEL SEGMENT 111 REPAIR DETAILS |
| 121 | C112 | CHANNEL SEGMENT 112 REPAIR DETAILS |
| 122 | C113 | CHANNEL SEGMENT 113 REPAIR DETAILS |
| 123 | C114 | CHANNEL SEGMENT 114 REPAIR DETAILS |
| 124 | C115 | CHANNEL SEGMENT 115 REPAIR DETAILS |
| 125 | C116 | CHANNEL SEGMENT 116 REPAIR DETAILS |
| 126 | C117 | CHANNEL SEGMENT 117 REPAIR DETAILS |
| 127 | C118 | CHANNEL SEGMENT 118 REPAIR DETAILS |
| 128 | C119 | CHANNEL SEGMENT 119 REPAIR DETAILS |
| 129 | C120 | CHANNEL SEGMENT 120 REPAIR DETAILS |
| 130 | C121 | CHANNEL SEGMENT 121 REPAIR DETAILS |
| 131 | C122 | CHANNEL SEGMENT 122 REPAIR DETAILS |
| 132 | C123 | CHANNEL SEGMENT 123 REPAIR DETAILS |
| 133 | C124 | CHANNEL SEGMENT 124 REPAIR DETAILS |
| 134 | C125 | CHANNEL SEGMENT 125 REPAIR DETAILS |
| 135 | C126 | CHANNEL SEGMENT 126 REPAIR DETAILS |
| 136 | C127 | CHANNEL SEGMENT 127 REPAIR DETAILS |
| 137 | C128 | CHANNEL SEGMENT 128 REPAIR DETAILS |
| 138 | C129 | CHANNEL SEGMENT 129 REPAIR DETAILS |
| 139 | C130 | CHANNEL SEGMENT 130 REPAIR DETAILS |
| 140 | C131 | CHANNEL SEGMENT 131 REPAIR DETAILS |
| 141 | C132 | CHANNEL SEGMENT 132 REPAIR DETAILS |
| 142 | C133 | CHANNEL SEGMENT 133 REPAIR DETAILS |
| 143 | C134 | CHANNEL SEGMENT 134 REPAIR DETAILS |
| 144 | C135 | CHANNEL SEGMENT 135 REPAIR DETAILS |
| 145 | C136 | CHANNEL SEGMENT 136 REPAIR DETAILS |
| 146 | C137 | CHANNEL SEGMENT 137 REPAIR DETAILS |
| 147 | C138 | CHANNEL SEGMENT 138 REPAIR DETAILS |
| 148 | C139 | CHANNEL SEGMENT 139 REPAIR DETAILS |
| 149 | C140 | CHANNEL SEGMENT 140 REPAIR DETAILS |
| 150 | C141 | CHANNEL SEGMENT 141 REPAIR DETAILS |
| 151 | C142 | CHANNEL SEGMENT 142 REPAIR DETAILS |
| 152 | C143 | CHANNEL SEGMENT 143 REPAIR DETAILS |
| 153 | C144 | CHANNEL SEGMENT 144 REPAIR DETAILS |
| 154 | C145 | CHANNEL SEGMENT 145 REPAIR DETAILS |
| 155 | C146 | CHANNEL SEGMENT 146 REPAIR DETAILS |
| 156 | C146R | CHANNEL SEGMENT 146R REPAIR DETAILS |
| 157 | C147 | CHANNEL SEGMENT 147 REPAIR DETAILS |
| 158 | C147R | CHANNEL SEGMENT 147R REPAIR DETAILS |
| 159 | C148 | CHANNEL SEGMENT 148 REPAIR DETAILS |
| 160 | C148R | CHANNEL SEGMENT 148R REPAIR DETAILS |
| 161 | C149 | CHANNEL SEGMENT 149 REPAIR DETAILS |
| 162 | C149R | CHANNEL SEGMENT 149R REPAIR DETAILS |
| 163 | C150 | CHANNEL SEGMENT 150 REPAIR DETAILS |
| 164 | C151 | CHANNEL SEGMENT 151 REPAIR DETAILS |
| 165 | C152 | CHANNEL SEGMENT 152 REPAIR DETAILS |
| 166 | C153A | CHANNEL SEGMENT 153 1ST HALF REPAIR DETAILS |
| 167 | C153B | CHANNEL SEGMENT 153 2ND HALF REPAIR DETAILS |
| 168 | C154A | CHANNEL SEGMENT 154 1ST HALF REPAIR DETAILS |
| 169 | C154B | CHANNEL SEGMENT 154 2ND HALF REPAIR DETAILS |
| 170 | C155A | CHANNEL SEGMENT 155 1ST HALF REPAIR DETAILS |
| 171 | C155B | CHANNEL SEGMENT 155 2ND HALF REPAIR DETAILS |
| 172 | C156A | CHANNEL SEGMENT 156 1ST HALF REPAIR DETAILS |
| 173 | C156B | CHANNEL SEGMENT 156 2ND HALF REPAIR DETAILS |
| 174 | C156.5A | CHANNEL SEGMENT 156.5 1ST HALF REPAIR DETAILS |
| 175 | C156.5B | CHANNEL SEGMENT 156.5 2ND HALF REPAIR DETAILS |
| 176 | C157A | CHANNEL SEGMENT 157 1ST HALF REPAIR DETAILS |
| 177 | C157B | CHANNEL SEGMENT 157 2ND HALF REPAIR DETAILS |
| 178 | C158A | CHANNEL SEGMENT 158 1ST HALF REPAIR DETAILS |
| 179 | C158B | CHANNEL SEGMENT 158 2ND HALF REPAIR DETAILS |
| 180 | C159A | CHANNEL SEGMENT 159 1ST HALF REPAIR DETAILS |
| 181 | C159B | CHANNEL SEGMENT 159 2ND HALF REPAIR DETAILS |
| 182 | C160A | CHANNEL SEGMENT 160 1ST HALF REPAIR DETAILS |
| 183 | C160B | CHANNEL SEGMENT 160 2ND HALF REPAIR DETAILS |
| 184 | C161A | CHANNEL SEGMENT 161 1ST HALF REPAIR DETAILS |
| 185 | C161B | CHANNEL SEGMENT 161 2ND HALF REPAIR DETAILS |
| 186 | C162A | CHANNEL SEGMENT 162 1ST HALF REPAIR DETAILS |
| 187 | C162B | CHANNEL SEGMENT 162 2ND HALF REPAIR DETAILS |
| 188 | C163A | CHANNEL SEGMENT 163 1ST HALF REPAIR DETAILS |
| 189 | C163B | CHANNEL SEGMENT 163 2ND HALF REPAIR DETAILS |
| 190 | C164A | CHANNEL SEGMENT 164 1ST HALF REPAIR DETAILS |
| 191 | C164B | CHANNEL SEGMENT 164 2ND HALF REPAIR DETAILS |
| 192 | C165A | CHANNEL SEGMENT 165 1ST HALF REPAIR DETAILS |
| 193 | C165B | CHANNEL SEGMENT 165 2ND HALF REPAIR DETAILS |
| 194 | C166A | CHANNEL SEGMENT 166 1ST HALF REPAIR DETAILS |
| 195 | C166B | CHANNEL SEGMENT 166 2ND HALF REPAIR DETAILS |
| 196 | C167 | CHANNEL SEGMENT 167 REPAIR DETAILS |
| 197 | C168 | CHANNEL SEGMENT 168 REPAIR DETAILS |
| 198 | C169 | CHANNEL SEGMENT 169 REPAIR DETAILS |
| 199 | C170 | CHANNEL SEGMENT 170 REPAIR DETAILS |
| 200 | C170R | CHANNEL SEGMENT 170R REPAIR DETAILS |
| 201 | C171 | CHANNEL SEGMENT 171 REPAIR DETAILS |
| 202 | C171R | CHANNEL SEGMENT 171 REPAIR DETAILS |
| 203 | C172 | CHANNEL SEGMENT 172 REPAIR DETAILS |
| 204 | C173 | CHANNEL SEGMENT 173 REPAIR DETAILS |
| 205 | C174 | CHANNEL SEGMENT 174 REPAIR DETAILS |
| 206 | C175A | CHANNEL SEGMENT 175 1ST HALF REPAIR DETAILS |
| 207 | C175B | CHANNEL SEGMENT 175 2ND HALF REPAIR DETAILS |
| 208 | C176A | CHANNEL SEGMENT 176 1ST HALF REPAIR DETAILS |
| 209 | C176B | CHANNEL SEGMENT 176 2ND HALF REPAIR DETAILS |
| 210 | C177A | CHANNEL SEGMENT 177 1ST HALF REPAIR DETAILS |
| 211 | C177B | CHANNEL SEGMENT 177 2ND HALF REPAIR DETAILS |
| **STRUCTURAL** | | |
| 212 | SL101 | CONCRETE LINING GENERAL NOTES |
| 213 | SL102 | CONCRETE LINING TYPICAL DETAILS |
| 214 | SL201 | CONCRETE LINING AT 67 TO 82 FRAMING PLAN |
| 215 | SL202 | CONCRETE LINING AT 141 TO 147 FRAMING PLAN |
| 216 | SL203 | CONCRETE LINING AT 150 TO 152 FRAMING PLAN |
| 217 | SL204 | CONCRETE LINING AT 154 TO 156.5 FRAMING PLAN |
| 218 | SL205 | CONCRETE LINING AT 156.5 TO 159 FRAMING PLAN |
| 219 | SL206 | CONCRETE LINING AT 159 TO 162 FRAMING PLAN |
| 220 | SL207 | CONCRETE LINING AT 173 TO 175 FRAMING PLAN |
| 221 | SR201 | SURFACE REPAIR NOTES AND DETAILS |
| 222 | SR202 | SURFACE REPAIR DETAILS |
| 223 | SF201 | CHAINLINK FENCE REPAIR NOTES AND DETAILS |
| 224 | SF202 | CHAINLINK FENCE REPAIR DETAILS |
| 225 | SF203 | GATE AND DETAILS |

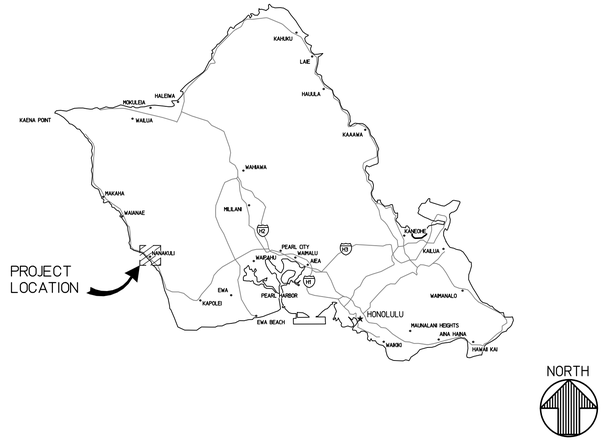


NOT TO SCALE — ISLAND MAP

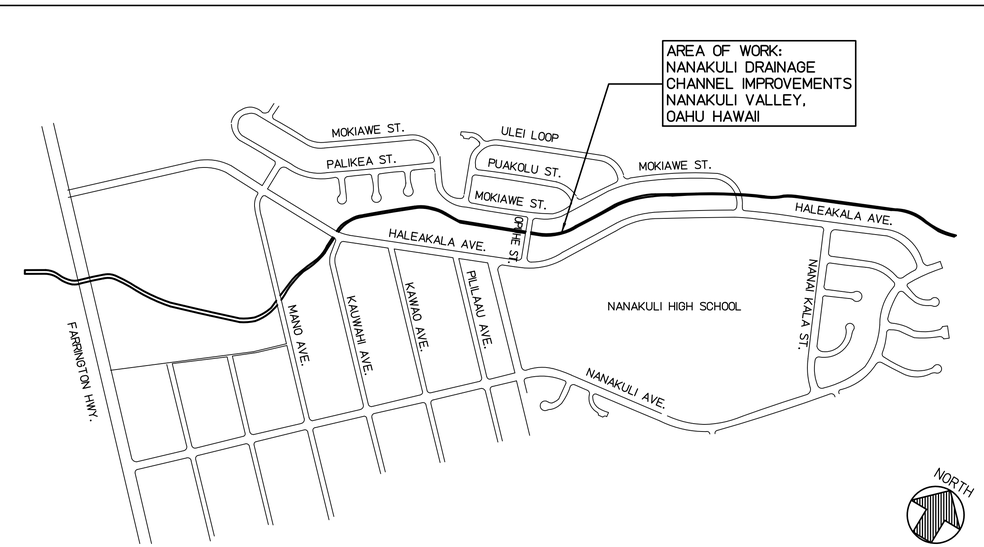


NOT TO SCALE — LOCATION MAP

| REVISION NO. | DATE | REVISIONS | BY |
|---|---|---|---|
| | | | |

ATHER R. DAR
LICENSED PROFESSIONAL ENGINEER
No. 7808-S
HAWAII U.S.A.
Exp. Date: 4-30-20

THIS WORK WAS PREPARED BY ME OR UNDER MY SUPERVISION AND CONSTRUCTION OF THIS PROJECT WILL BE UNDER MY OBSERVATION

DEPARTMENT OF HAWAIIAN HOMELAND

**NANAKULI FLOOD CONTROL CHANNEL IMPROVEMENTS NANAKULI VALLEY, OAHU HAWAII**

MAPS AND INDEX OF DRAWINGS

| | |
|---|---|
| DESIGNED BY: | TTP |
| DRAWN BY: | AK, AP, DL |
| CHECKED BY: | AD |
| SUPV: | |
| DATE: | 03/05/2019 |


HAWAII ENGINEERING GROUP, Inc.
Civil & Structural Engineers
1088 BISHOP STREET #2506
HONOLULU, HI 96813
Tel: 808-533-2092


JOB NO.

SHEET T002
2 OF 225 SHTS

FILE ___ DRAWER ___ ___ FOLDER ___ ___

Plot date: 15-Apr-2020

Full Size Plot

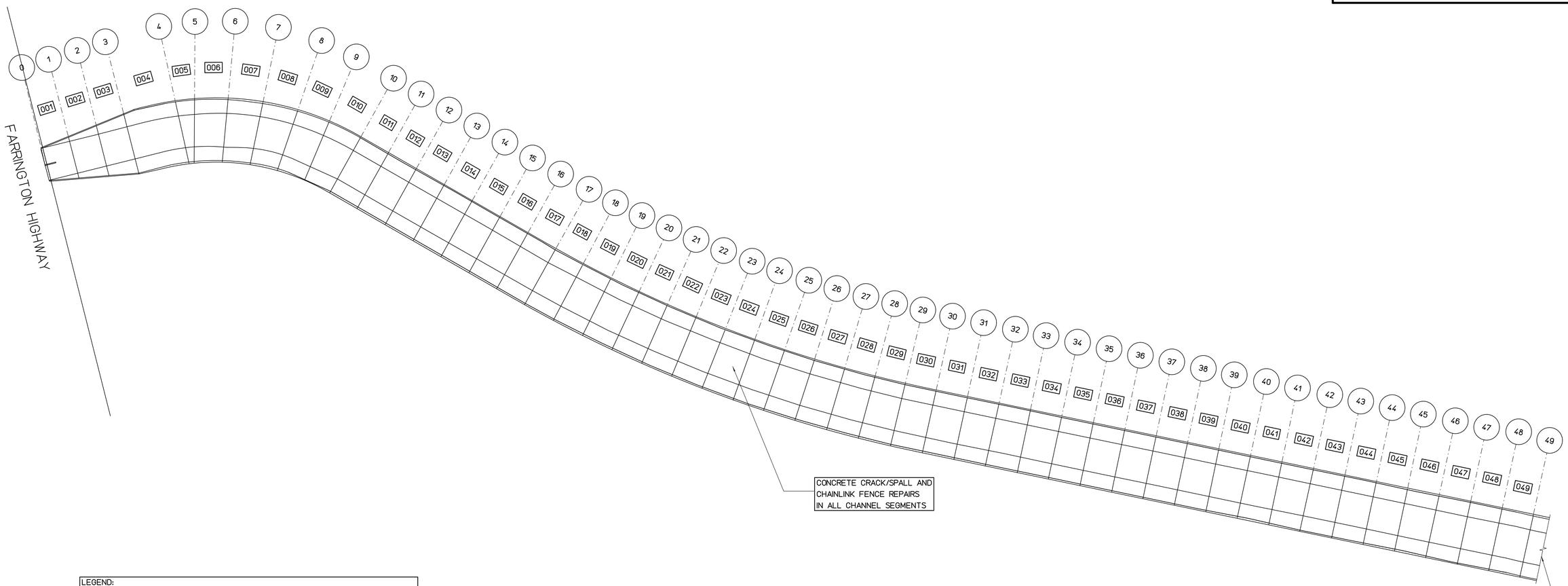


LEGEND:

| | |
|---|---|
| 052 | CHANNEL SEGMENT NUMBER. CHANNEL SEGMENT NUMBER IS SAME AS SEGMENT ENDING GRID NUMBER |
| 162 | GRID NUMBER. GRIDS ARE LOCATED AT EXISTING CONSTRUCTION JOINTS. |
| | SHADED AREAS INDICATE NEW CONCRETE LINING, SEE DETAILS IN SHEETS SL201 TO SL207 |

NOTES:

1. FIRST GRID (0) IS LOCATED AT CHANNEL MAKAI END (FARRINGTON HIGHWAY CULVERT).
2. LAST GRID (177) IS LOCATED AT CHANNEL MAUKA END.
3. DETAIL VIEWS AND PHOTOS OF CHANNEL SEGMENT ARE INDICATED IN CIVIL SHEETS C001 TO C177 CORRESPONDING TO CHANNEL SEGMENTS 001 TO 177.
3. SEE SHEETS C001 TO C177 FOR REPAIR REQUIREMENTS TO CONCRETE CRACKS, CONCRETE SPALLS, AND CHAINLINK FENCES.

## SITE PLAN AT GRID (0) TO (49)

SCALE : 1" = 40'-0"

NORTH

GRAPHIC SCALE:

0 10'20' 40' 80' 120'

1"=40'-0"

| REVISION NO. | DATE | REVISIONS | BY |
|---|---|---|---|
| | | | |

ATHER R. DAR
LICENSED PROFESSIONAL ENGINEER
No. 7808-S
HAWAII U.S.A.
Exp. Date: 4-30-20

THIS WORK WAS PREPARED BY ME OR UNDER MY SUPERVISION AND CONSTRUCTION OF THIS PROJECT WILL BE UNDER MY OBSERVATION

DEPARTMENT OF HAWAIIAN HOMELAND

NANAKULI FLOOD CONTROL
CHANNEL IMPROVEMENTS
NANAKULI VALLEY, OAHU HAWAII

SITE PLAN AT GRID (0) TO (49)

| | |
|---|---|
| DESIGNED BY: | TTP |
| DRAWN BY: | AK, AP, DL |
| CHECKED BY: | AD |
| SUPV: | |
| DATE: | 03/05/2019 |

HAWAII ENGINEERING GROUP, Inc.
Civil & Structural Engineers
1088 BISHOP STREET #2506
HONOLULU, HI 96813
Tel: 808-533-2092

JOB NO.

SHEET T003
3 OF 225 SHTS

FILE ___ DRAWER ___ ___ FOLDER ___ ___

Plot date: 15-Apr-2020

Full Size Plot

LEGEND:

| | |
|---|---|
| 052 | CHANNEL SEGMENT NUMBER. CHANNEL SEGMENT NUMBER IS SAME AS SEGMENT ENDING GRID NUMBER |
| 162 | GRID NUMBER. GRIDS ARE LOCATED AT EXISTING CONSTRUCTION JOINTS. |
| | SHADED AREAS INDICATE NEW CONCRETE LINING, SEE DETAILS IN SHEETS SL201 TO SL207 |

NOTES:

1. FIRST GRID (0) IS LOCATED AT CHANNEL MAKAI END (FARRINGTON HIGHWAY CULVERT).
2. LAST GRID (177) IS LOCATED AT CHANNEL MAUKA END.
3. DETAIL VIEWS AND PHOTOS OF CHANNEL SEGMENT ARE INDICATED IN CIVIL SHEETS C001 TO C177 CORRESPONDING TO CHANNEL SEGMENTS 001 TO 177.
3. SEE SHEETS C001 TO C177 FOR REPAIR REQUIREMENTS TO CONCRETE CRACKS, CONCRETE SPALLS, AND CHAINLINK FENCES.

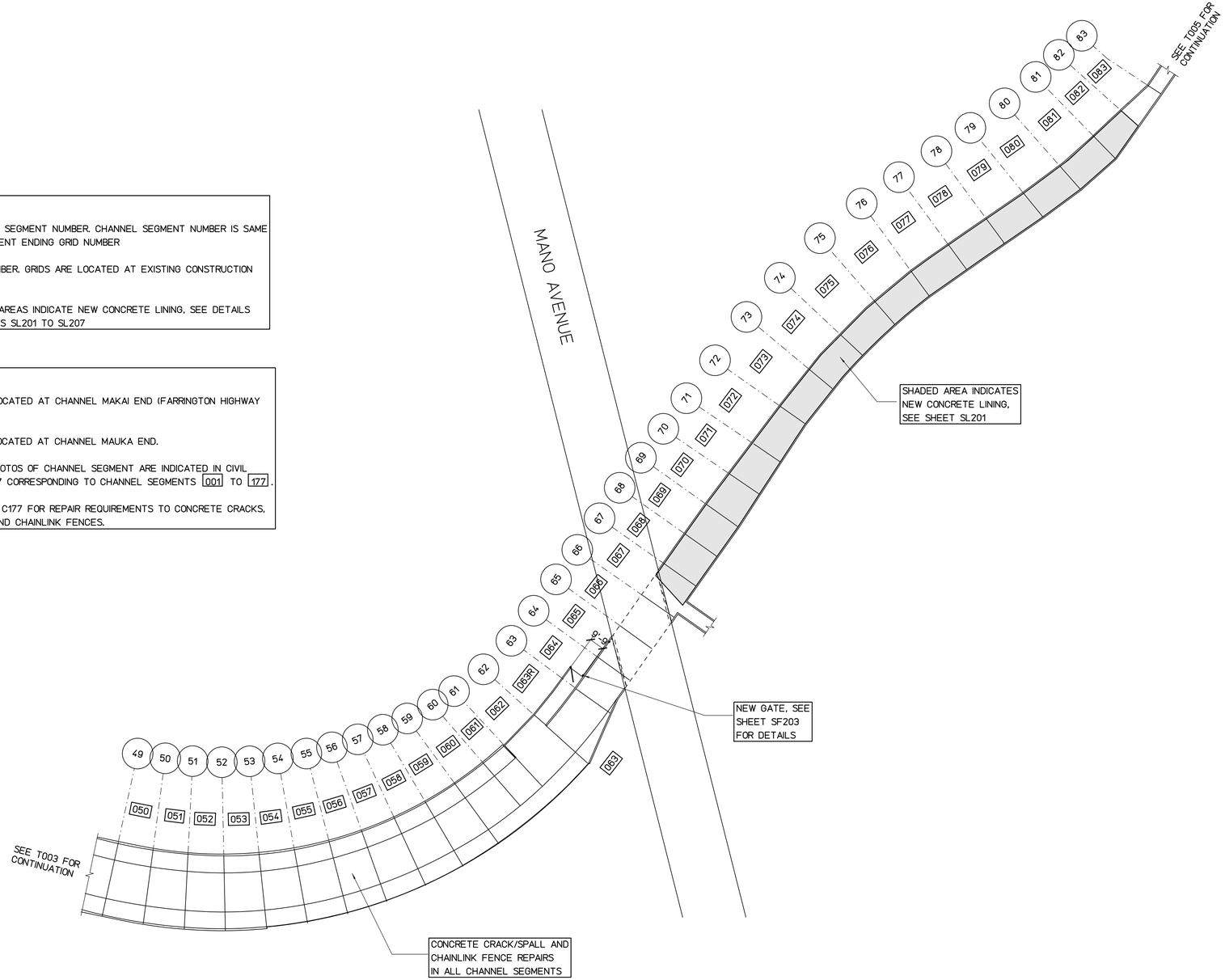


## SITE PLAN AT GRID (49) TO (83)

SCALE : 1" = 40'-0"

NORTH

GRAPHIC SCALE:

0 10' 20' 40' 80' 120'

1"=40'-0"

| REVISION NO. | DATE | REVISIONS | BY |
|---|---|---|---|
| | | | |

ATHER R. DAR
LICENSED PROFESSIONAL ENGINEER
No. 7808-S
HAWAII U.S.A.

Exp. Date: 4-30-20

THIS WORK WAS PREPARED BY ME OR UNDER MY SUPERVISION AND CONSTRUCTION OF THIS PROJECT WILL BE UNDER MY OBSERVATION

DEPARTMENT OF HAWAIIAN HOMELAND

**NANAKULI FLOOD CONTROL CHANNEL IMPROVEMENTS NANAKULI VALLEY, OAHU HAWAII**

SITE PLAN AT GRID (49) TO (83)

| | |
|---|---|
| DESIGNED BY: | TTP |
| DRAWN BY: | AK, AP, DL |
| CHECKED BY: | AD |
| SUPV: | |
| DATE: | 03/05/2019 |

HAWAII ENGINEERING GROUP, Inc.
Civil & Structural Engineers
1088 BISHOP STREET #2506
HONOLULU, HI 96813
Tel: 808-523-2092

JOB NO.

SHEET T004
4 OF 225 SHTS

FILE ___ ___ DRAWER___ ___ ___ FOLDER ___ ___

Plot date: 15-Apr-2020

Full Size Plot

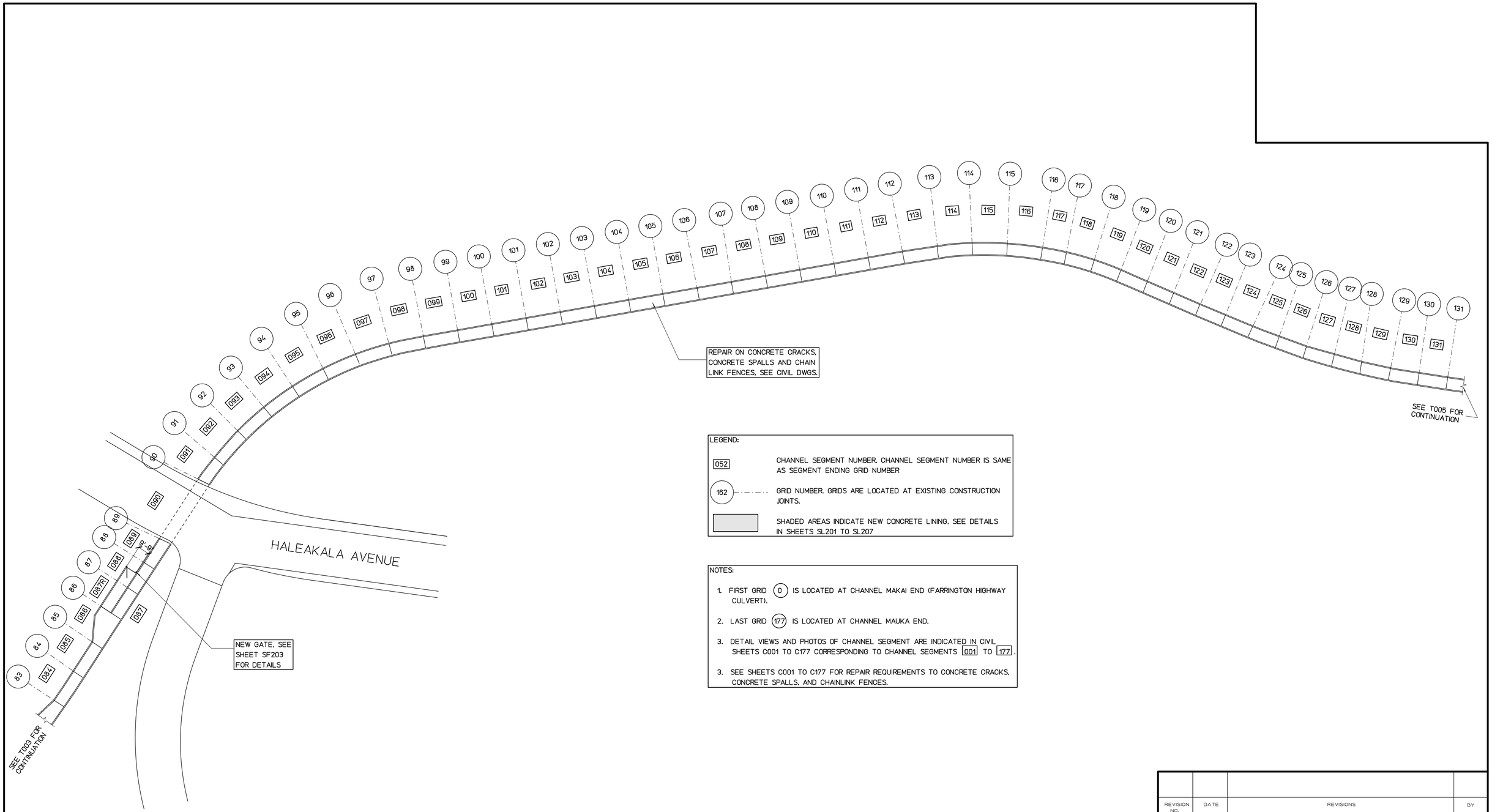


LEGEND:

| | |
|---|---|
| 052 | CHANNEL SEGMENT NUMBER. CHANNEL SEGMENT NUMBER IS SAME AS SEGMENT ENDING GRID NUMBER |
| 162 | GRID NUMBER. GRIDS ARE LOCATED AT EXISTING CONSTRUCTION JOINTS. |
| | SHADED AREAS INDICATE NEW CONCRETE LINING, SEE DETAILS IN SHEETS SL201 TO SL207 |

NOTES:

1. FIRST GRID (0) IS LOCATED AT CHANNEL MAKAI END (FARRINGTON HIGHWAY CULVERT).
2. LAST GRID (177) IS LOCATED AT CHANNEL MAUKA END.
3. DETAIL VIEWS AND PHOTOS OF CHANNEL SEGMENT ARE INDICATED IN CIVIL SHEETS C001 TO C177 CORRESPONDING TO CHANNEL SEGMENTS 001 TO 177.
3. SEE SHEETS C001 TO C177 FOR REPAIR REQUIREMENTS TO CONCRETE CRACKS, CONCRETE SPALLS, AND CHAINLINK FENCES.

## SITE PLAN AT GRID (83) TO (131)

SCALE : 1" = 40'-0"

NORTH

GRAPHIC SCALE:

0 10' 20' 40' 80' 120'

1"=40'-0"

| REVISION NO. | DATE | REVISIONS | BY |
|---|---|---|---|
| | | | |

ATHER R. DAR
LICENSED PROFESSIONAL ENGINEER
No. 7808-S
HAWAII U.S.A.
Exp. Date: 4-30-20

THIS WORK WAS PREPARED BY ME OR UNDER MY SUPERVISION AND CONSTRUCTION OF THIS PROJECT WILL BE UNDER MY OBSERVATION

DEPARTMENT OF HAWAIIAN HOMELAND

**NANAKULI FLOOD CONTROL CHANNEL IMPROVEMENTS**
**NANAKULI VALLEY, OAHU HAWAII**

SITE PLAN AT GRID (83) TO (131)

| | |
|---|---|
| DESIGNED BY: | TTP |
| DRAWN BY: | AK, AP, DL |
| CHECKED BY: | AD |
| SUPV: | |
| DATE: | 03/05/2019 |

HAWAII ENGINEERING GROUP, Inc.
Civil & Structural Engineers
1088 BISHOP STREET #2506
HONOLULU HI 96813
Tel: 808-533-2092

JOB NO.

SHEET T005
5 OF 225 SHTS

FILE ___ DRAWER ___ ___ FOLDER ___ ___

Plot date: 15-Apr-2020

Full Size Plot

LEGEND:

| | |
|---|---|
| 052 | CHANNEL SEGMENT NUMBER. CHANNEL SEGMENT NUMBER IS SAME AS SEGMENT ENDING GRID NUMBER |
| 162 | GRID NUMBER. GRIDS ARE LOCATED AT EXISTING CONSTRUCTION JOINTS. |
| | SHADED AREAS INDICATE NEW CONCRETE LINING, SEE DETAILS IN SHEETS SL201 TO SL207 |

NOTES:

1. FIRST GRID (0) IS LOCATED AT CHANNEL MAKAI END (FARRINGTON HIGHWAY CULVERT).
2. LAST GRID (177) IS LOCATED AT CHANNEL MAUKA END.
3. DETAIL VIEWS AND PHOTOS OF CHANNEL SEGMENT ARE INDICATED IN CIVIL SHEETS C001 TO C177 CORRESPONDING TO CHANNEL SEGMENTS 001 TO 177.
3. SEE SHEETS C001 TO C177 FOR REPAIR REQUIREMENTS TO CONCRETE CRACKS, CONCRETE SPALLS, AND CHAINLINK FENCES.

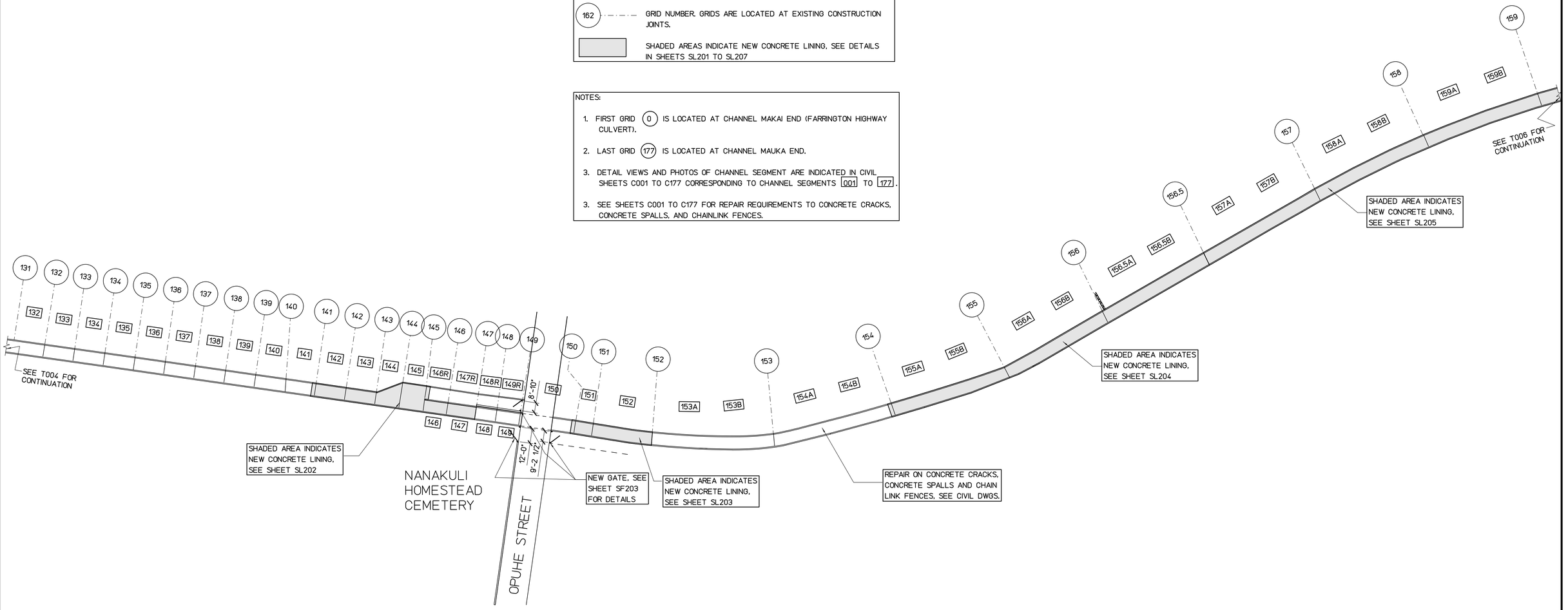


SITE PLAN AT GRID (131) TO (159)

SCALE : 1" = 40'-0"

NORTH

GRAPHIC SCALE:

0 10' 20' 40' 80' 120'

1"=40'-0"

| REVISION NO. | DATE | REVISIONS | BY |
|---|---|---|---|
| | | | |

ATHER R. DAR
LICENSED PROFESSIONAL ENGINEER
No. 7808-S
HAWAII U.S.A.
Exp. Date: 4-30-20

THIS WORK WAS PREPARED BY ME OR UNDER MY SUPERVISION AND CONSTRUCTION OF THIS PROJECT WILL BE UNDER MY OBSERVATION

DEPARTMENT OF HAWAIIAN HOMELAND

# NANAKULI FLOOD CONTROL CHANNEL IMPROVEMENTS NANAKULI VALLEY, OAHU HAWAII

## SITE PLAN AT GRID (131) TO (159)

| | |
|---|---|
| DESIGNED BY: | TTP |
| DRAWN BY: | AK, AP, DL |
| CHECKED BY: | AD |
| SUPV: | |
| DATE: | 03/05/2019 |


HAWAII ENGINEERING GROUP, Inc.
Civil & Structural Engineers
1088 BISHOP STREET #2506
HONOLULU HI 96813
Tel: 808-533-2092


JOB NO.

SHEET T006
6 OF 225 SHTS

FILE ___ DRAWER___ ___ FOLDER ___ ___

Plot date: 15-Apr-2020

Full Size Plot

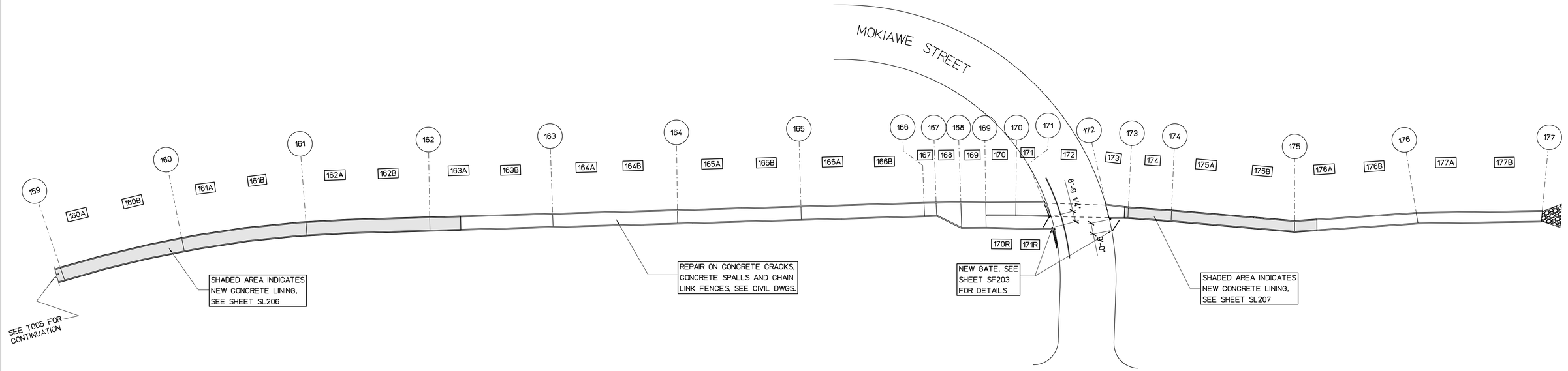


LEGEND:

| | |
|---|---|
| 052 | CHANNEL SEGMENT NUMBER. CHANNEL SEGMENT NUMBER IS SAME AS SEGMENT ENDING GRID NUMBER |
| 162 | GRID NUMBER. GRIDS ARE LOCATED AT EXISTING CONSTRUCTION JOINTS. |
| | SHADED AREAS INDICATE NEW CONCRETE LINING, SEE DETAILS IN SHEETS SL201 TO SL207 |

NOTES:

1. FIRST GRID (0) IS LOCATED AT CHANNEL MAKAI END (FARRINGTON HIGHWAY CULVERT).
2. LAST GRID (177) IS LOCATED AT CHANNEL MAUKA END.
3. DETAIL VIEWS AND PHOTOS OF CHANNEL SEGMENT ARE INDICATED IN CIVIL SHEETS C001 TO C177 CORRESPONDING TO CHANNEL SEGMENTS 001 TO 177.
3. SEE SHEETS C001 TO C177 FOR REPAIR REQUIREMENTS TO CONCRETE CRACKS, CONCRETE SPALLS, AND CHAINLINK FENCES.

## SITE PLAN AT GRID (159) TO (177)

SCALE : 1" = 40'-0"

NORTH

GRAPHIC SCALE:

0 10'20' 40' 80' 120'

1"=40'-0"

| REVISION NO. | DATE | REVISIONS | BY |
|---|---|---|---|
| | | | |

ATHER R. DAR
LICENSED PROFESSIONAL ENGINEER
No. 7808-S
HAWAII U.S.A.

Exp. Date: 4-30-20

THIS WORK WAS PREPARED BY ME OR UNDER MY SUPERVISION AND CONSTRUCTION OF THIS PROJECT WILL BE UNDER MY OBSERVATION

DEPARTMENT OF HAWAIIAN HOMELAND

# NANAKULI FLOOD CONTROL CHANNEL IMPROVEMENTS NANAKULI VALLEY, OAHU HAWAII

## SITE PLAN AT GRID (159) TO (177)

| | |
|---|---|
| DESIGNED BY: | TTP |
| DRAWN BY: | AK, AP, DL |
| CHECKED BY: | AD |
| SUPV: | |
| DATE: | 03/05/2019 |


HAWAII ENGINEERING GROUP, Inc.
Civil & Structural Engineers
1088 BISHOP STREET #2506
HONOLULU, HI 96813
Tel: 808-533-2092


JOB NO.

SHEET T007

8 OF 225 SHTS

FILE ___ DRAWER ___ ___ FOLDER ___ ___

Plot date: 15-Apr-2020
Full Size Plot

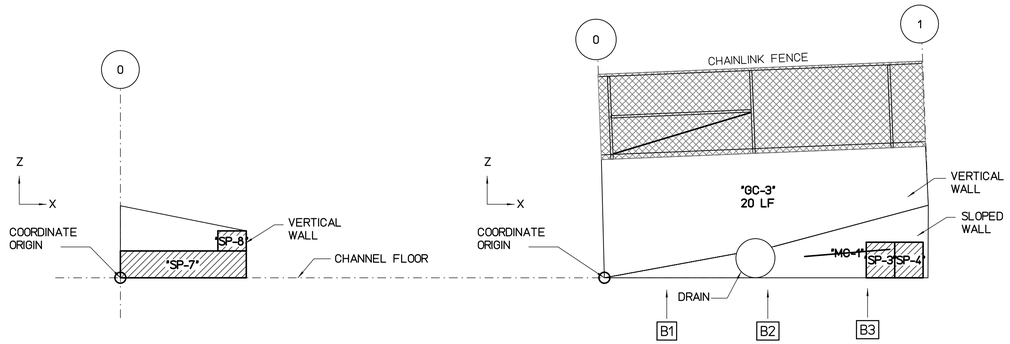


## WALL "C" FACE 2 FLATTEN VIEW

SCALE : 3/16" = 1'-0"

## WALL "B" FLATTEN VIEW

SCALE : 3/16" = 1'-0"

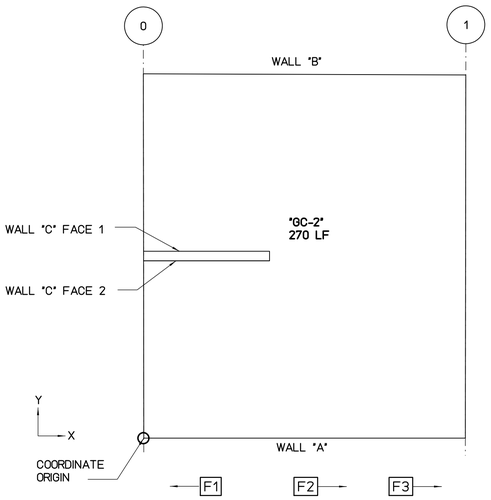


## FLOOR PLAN VIEW

SCALE : 3/16" = 1'-0"

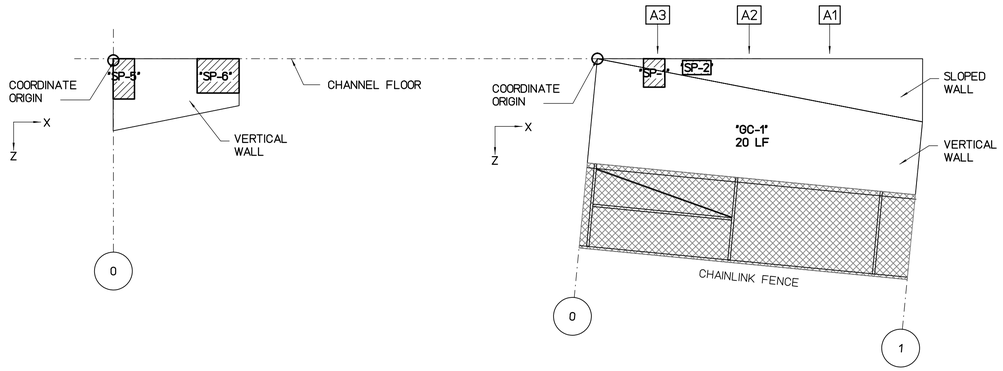


## WALL "C" FACE 1 FLATTEN VIEW

SCALE : 3/16" = 1'-0"

## WALL "A" FLATTEN VIEW

SCALE : 3/16" = 1'-0"

REPAIR LEGEND AND NOTES:

- [2] CRACK AND SPALL REPAIR TYPES, SEE SHEETS SR201 AND SR202 FOR DETAILS. TYPE [*] INDICATES NO-REPAIR
- (A) CHAINLINK FENCE REPAIR TYPES, SEE SHEETS SF201 AND SF202 FOR DETAILS
- 1.0 TOP OF WALL LEANING DISTANCE TOWARD CHANNEL IN INCHES, SEE SHEETS SL101 TO SL207 FOR CONCRETE LINING

PHOTO LEGEND:

- A1 WALL "A" ELEVATION PHOTO IDENTIFICATION SEE FLATTEN VIEW FOR PHOTO LOCATION
- B1 WALL "B" ELEVATION PHOTO IDENTIFICATION SEE FLATTEN VIEW FOR PHOTO LOCATION
- F1 CHANNEL FLOOR PHOTO IDENTIFICATION SEE FLOOR PLAN VIEW FOR PHOTO LOCATION

B1



B2



B3



F1



F2



F3



A1



A2



A3



### SPALL REPAIR CHART

| MARK | LOCATION | REPAIR TYPE | SPALL DIMENSION L | W | D | SPALL VOLUME | SPALL CENTER COORDINATE X | Y OR Z | RATING |
|---|---|---|---|---|---|---|---|---|---|
| "SP-1" | WALL "A" | 3 | 18 | 24 | 3 | 1296 | 4 | 0.9 | 6 |
| "SP-2" | WALL "A" | 3 | 24 | 12 | 2 | 576 | 7 | 0.5 | 7 |
| "SP-3" | WALL "B" | 3 | 36 | 24 | 2 | 1728 | 19.4 | 1.3 | 7 |
| "SP-4" | WALL "B" | 3 | 36 | 24 | 2 | 1728 | 21.4 | 1.3 | 7 |
| "SP-5" | WALL "C1" | 4 | 17 | 34 | 2 | 1156 | 1 | 1.4 | 8 |
| "SP-6" | WALL "C1" | 4 | 35 | 29 | 8 | 8120 | 7.4 | 1.4 | 8 |
| "SP-7" | WALL "C2" | 4 | 106 | 23 | 2 | 4876 | 4.5 | 1 | 8 |
| "SP-8" | WALL "C2" | 4 | 24 | 17 | 2 | 816 | 8 | 2.6 | 8 |

### CHAINLINK FENCE REPAIR CHART

| MARK | LOCATION | REPAIR TYPE | POSTS | TOP RAIL | BOTTOM WIRE | BRACE | FABRIC |
|---|---|---|---|---|---|---|---|
| | | | | | | | |

NOT IN CONTRACT

### CRACK REPAIR CHART

| MARK | LOCATION | REPAIR TYPE | GENERAL CRACKS (LF) | MAJOR CRACKS WIDTH (IN) | LENGTH (FT) | START PNT X | START PNT Y,Z | END PNT X | END PNT Y,Z | RATING |
|---|---|---|---|---|---|---|---|---|---|---|
| "MC-1" | WALL "B" | 1 | - | 0.38 | 6 | 14 | 1.5 | 20 | 2 | 6 |
| "GC-1" | WALL "A" | * | 20 | - | - | - | - | - | - | 8 |
| "GC-2" | FLOOR | * | 270 | - | - | - | - | - | - | 8 |
| "GC-3" | WALL "B" | * | 20 | - | - | - | - | - | - | 8 |
| | | | | | | | | | | |
| | | | | | | | | | | |
| | | | | | | | | | | |

GRAPHIC SCALES:

0 2' 4' 8' 12' 16'

3/16"=1'-0"

| REVISION NO. | DATE | REVISIONS | BY |
|---|---|---|---|
| | | | |

ATHER R. DAR
LICENSED PROFESSIONAL ENGINEER
No. 7808-S
HAWAII U.S.A.
Exp. Date: 4-30-20

THIS WORK WAS PREPARED BY ME OR UNDER MY SUPERVISION AND CONSTRUCTION OF THIS PROJECT WILL BE UNDER MY OBSERVATION

DEPARTMENT OF HAWAIIAN HOMELAND

NANAKULI FLOOD CONTROL CHANNEL IMPROVEMENTS
NANAKULI VALLEY, OAHU HAWAII

CHANNEL SEGMENT 001 REPAIR DETAILS

| | |
|---|---|
| DESIGNED BY: | TTP |
| DRAWN BY: | AK, AP, DL |
| CHECKED BY: | AD |
| SUPV: | |
| DATE: | 03/05/2019 |

HAWAII ENGINEERING GROUP, Inc.
Civil & Structural Engineers
1088 BISHOP STREET #2506
HONOLULU, HI 96813
Tel: 808-533-2092

JOB NO.

SHEET C001
8 OF 225 SHTS

FILE __ DRAWER __ FOLDER __

Plot date: 15-Apr-2020
Full Size Plot

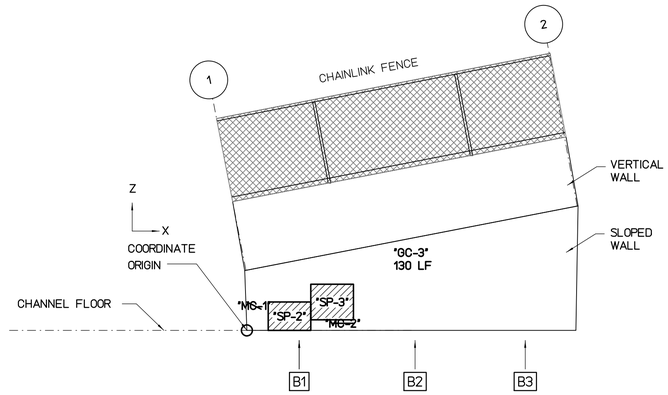


## WALL "B" FLATTEN VIEW

SCALE : 3/16" = 1'-0"

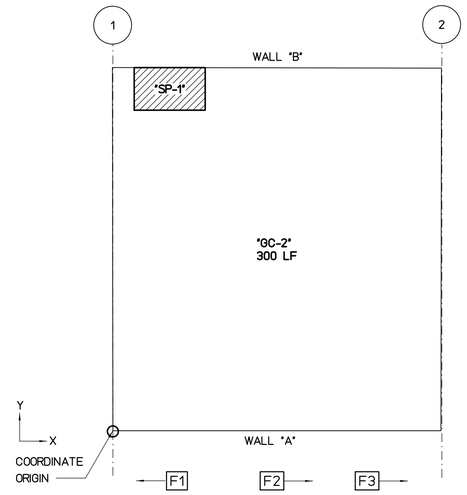


## FLOOR PLAN VIEW

SCALE : 3/16" = 1'-0"

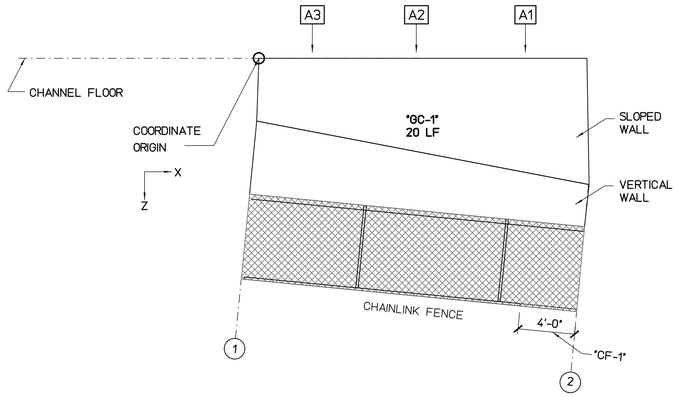


## WALL "A" FLATTEN VIEW

SCALE : 3/16" = 1'-0"

REPAIR LEGEND AND NOTES:

- 2 — CRACK AND SPALL REPAIR TYPES, SEE SHEETS SR201 AND SR202 FOR DETAILS. TYPE [*] INDICATES NO-REPAIR
- (A) — CHAINLINK FENCE REPAIR TYPES, SEE SHEETS SF201 AND SF202 FOR DETAILS
- 1.0 — TOP OF WALL LEANING DISTANCE TOWARD CHANNEL IN INCHES, SEE SHEETS SL101 TO SL207 FOR CONCRETE LINING

PHOTO LEGEND:

- A1 — WALL "A" ELEVATION PHOTO IDENTIFICATION SEE FLATTEN VIEW FOR PHOTO LOCATION
- B1 — WALL "B" ELEVATION PHOTO IDENTIFICATION SEE FLATTEN VIEW FOR PHOTO LOCATION
- F1 — CHANNEL FLOOR PHOTO IDENTIFICATION SEE FLOOR PLAN VIEW FOR PHOTO LOCATION

B1



B2



B3



F1



F2



F3



A1



A2



A3



### SPALL REPAIR CHART

| MARK | LOCATION | REPAIR TYPE | SPALL DIMENSION L | SPALL DIMENSION W | SPALL DIMENSION D | SPALL VOLUME | SPALL CENTER COORDINATE X | SPALL CENTER COORDINATE Y OR Z | RATING |
|---|---|---|---|---|---|---|---|---|---|
| "SP-1" | FLOOR | 3 | 60 | 36 | 3 | 6480 | 4 | 24.1 | 6 |
| "SP-2" | WALL "B" | 3 | 36 | 24 | 2 | 1728 | 3 | 1 | 7 |
| "SP-3" | WALL "B" | 3 | 36 | 30 | 2 | 2160 | 6 | 2 | 7 |

### CHAINLINK FENCE REPAIR CHART

| MARK | LOCATION | REPAIR TYPE | POSTS | TOP RAIL | BOTTOM WIRE | BRACE | FABRIC |
|---|---|---|---|---|---|---|---|
| "CF-1" | WALL "A" | (C) | - | MISSING 4' | - | - | - |

NOT IN CONTRACT

### CRACK REPAIR CHART

| MARK | LOCATION | REPAIR TYPE | GENERAL CRACKS (LF) | MAJOR CRACKS WIDTH (IN) | MAJOR CRACKS LENGTH (FT) | MAJOR CRACKS START PNT X | MAJOR CRACKS START PNT Y,Z | MAJOR CRACKS END PNT X | MAJOR CRACKS END PNT Y,Z | RATING |
|---|---|---|---|---|---|---|---|---|---|---|
| "MC-1" | WALL "B" | 1 | - | 0.25 | 1 | 0 | 2 | 1 | 1.5 | 7 |
| "MC-2" | WALL "B" | 1 | - | 0.25 | 2 | 6 | 0.5 | 7.5 | 0.5 | 7 |
| "GC-1" | WALL "A" | * | 20 | - | - | - | - | - | - | 8 |
| "GC-2" | FLOOR | * | 300 | - | - | - | - | - | - | 8 |
| "GC-3" | WALL "B" | * | 130 | - | - | - | - | - | - | 8 |

GRAPHIC SCALES:

0 1' 2' 4' 8' 12' 16'

3/16"=1'-0"

| REVISION NO. | DATE | REVISIONS | BY |
|---|---|---|---|
| | | | |

ATHER R. DAR
LICENSED PROFESSIONAL ENGINEER
No. 7808-S
HAWAII U.S.A.
Exp. Date: 4-30-20

THIS WORK WAS PREPARED BY ME OR UNDER MY SUPERVISION AND CONSTRUCTION OF THIS PROJECT WILL BE UNDER MY OBSERVATION

DEPARTMENT OF HAWAIIAN HOMELAND

NANAKULI FLOOD CONTROL CHANNEL IMPROVEMENTS
NANAKULI VALLEY, OAHU HAWAII

CHANNEL SEGMENT 002 REPAIR DETAILS

DESIGNED BY: TTP
DRAWN BY: AK, AP, DL
CHECKED BY: AD
SUPV:
DATE: 03/05/2019

HAWAII ENGINEERING GROUP, Inc.
Civil & Structural Engineers
1088 BISHOP STREET #2506
HONOLULU, HI 96813
Tel: 808-533-2092

JOB NO.

SHEET C002
9 OF 225 SHTS

FILE ___ DRAWER ___ ___ FOLDER ___ ___

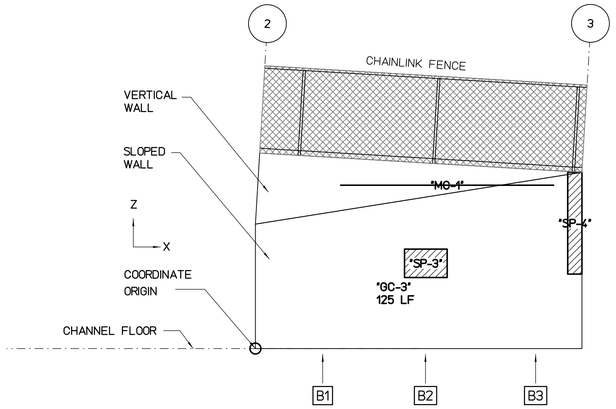


## WALL "B" FLATTEN VIEW

SCALE : 3/16" = 1'-0"

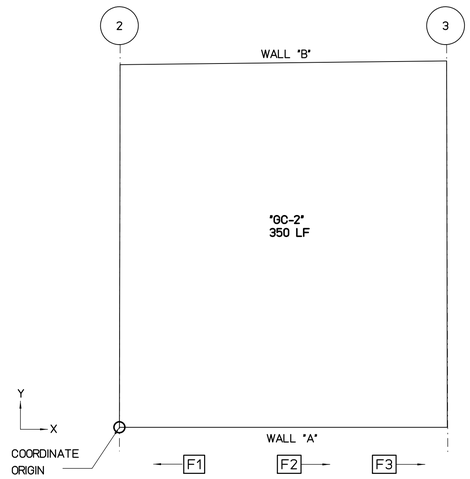


## FLOOR PLAN VIEW

SCALE : 3/16" = 1'-0"

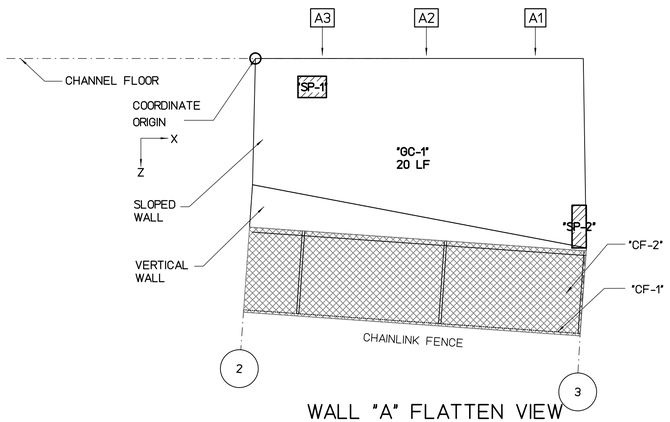


## WALL "A" FLATTEN VIEW

SCALE : 3/16" = 1'-0"

REPAIR LEGEND AND NOTES:

- [2] CRACK AND SPALL REPAIR TYPES, SEE SHEETS SR201 AND SR202 FOR DETAILS. TYPE [*] INDICATES NO-REPAIR
- (A) CHAINLINK FENCE REPAIR TYPES, SEE SHEETS SF201 AND SF202 FOR DETAILS
- [1.0] TOP OF WALL LEANING DISTANCE TOWARD CHANNEL IN INCHES, SEE SHEETS SL101 TO SL207 FOR CONCRETE LINING

PHOTO LEGEND:

- [A1] WALL "A" ELEVATION PHOTO IDENTIFICATION SEE FLATTEN VIEW FOR PHOTO LOCATION
- [B1] WALL "B" ELEVATION PHOTO IDENTIFICATION SEE FLATTEN VIEW FOR PHOTO LOCATION
- [F1] CHANNEL FLOOR PHOTO IDENTIFICATION SEE FLOOR PLAN VIEW FOR PHOTO LOCATION

B1



B2



B3



F1



F2



F3



A1



A2



A3



### SPALL REPAIR CHART

| MARK | LOCATION | REPAIR TYPE | SPALL DIMENSION L | SPALL DIMENSION W | SPALL DIMENSION D | SPALL VOLUME | SPALL CENTER COORDINATE X | SPALL CENTER COORDINATE Y OR Z | RATING |
|---|---|---|---|---|---|---|---|---|---|
| "SP-1" | WALL "A" | 3 | 24 | 18 | 2 | 864 | 4 | 2 | 7 |
| "SP-2" | WALL "A" | 3 | 12 | 36 | 3 | 1296 | 22.8 | 11.8 | 6 |
| "SP-3" | WALL "B" | 3 | 36 | 24 | 2 | 1728 | 12 | 6 | 7 |
| "SP-4" | WALL "B" | 3 | 12 | 86 | 3 | 3096 | 22.5 | 8.8 | 6 |

### CHAINLINK FENCE REPAIR CHART

| MARK | LOCATION | REPAIR TYPE | POSTS | TOP RAIL | BOTTOM WIRE | BRACE | FABRIC |
|---|---|---|---|---|---|---|---|
| "CF-1" | WALL "A" | C | - | MISSING 24' | - | - | - |
| "CF-2" | WALL "A" | E | - | - | - | - | DAMAGED 24'x6' |

NOT IN CONTRACT

### CRACK REPAIR CHART

| MARK | LOCATION | REPAIR TYPE | GENERAL CRACKS (LF) | MAJOR CRACKS WIDTH (IN) | MAJOR CRACKS LENGTH (FT) | MAJOR CRACKS START PNT X | MAJOR CRACKS START PNT Y,Z | MAJOR CRACKS END PNT X | MAJOR CRACKS END PNT Y,Z | RATING |
|---|---|---|---|---|---|---|---|---|---|---|
| "MC-1" | WALL "B" | 1 | - | 0.25 | 15 | 6 | 11.5 | 21 | 11.5 | 6 |
| "GC-1" | WALL "A" | * | 20 | - | - | - | - | - | - | 8 |
| "GC-2" | FLOOR | * | 350 | - | - | - | - | - | - | 8 |
| "GC-3" | WALL "B" | * | 125 | - | - | - | - | - | - | 8 |

GRAPHIC SCALES:

0 1' 2' 4' 8' 12' 16'

3/16"=1'-0"

| REVISION NO. | DATE | REVISIONS | BY |
|---|---|---|---|

ATHER R. DAR
LICENSED PROFESSIONAL ENGINEER
No. 7808-S
HAWAII U.S.A.

Exp. Date: 4-30-20

THIS WORK WAS PREPARED BY ME OR UNDER MY SUPERVISION AND CONSTRUCTION OF THIS PROJECT WILL BE UNDER MY OBSERVATION

DEPARTMENT OF HAWAIIAN HOMELAND

# NANAKULI FLOOD CONTROL CHANNEL IMPROVEMENTS NANAKULI VALLEY, OAHU HAWAII

CHANNEL SEGMENT [003] REPAIR DETAILS

| | |
|---|---|
| DESIGNED BY: | TTP |
| DRAWN BY: | AK, AP, DL |
| CHECKED BY: | AD |
| SUPV: | |
| DATE: | 03/05/2019 |


HAWAII ENGINEERING GROUP, Inc.
Civil & Structural Engineers
1088 BISHOP STREET #2506
HONOLULU, HI 96813
Tel: 808-533-2092


JOB NO.

SHEET C003

10 OF 225 SHTS

FILE ___ ___ DRAWER ___ ___ ___ FOLDER ___ ___

Plot date: 15-Apr-2020

Full Size Plot

Plot date: 15-Apr-2020
Full Size Plot

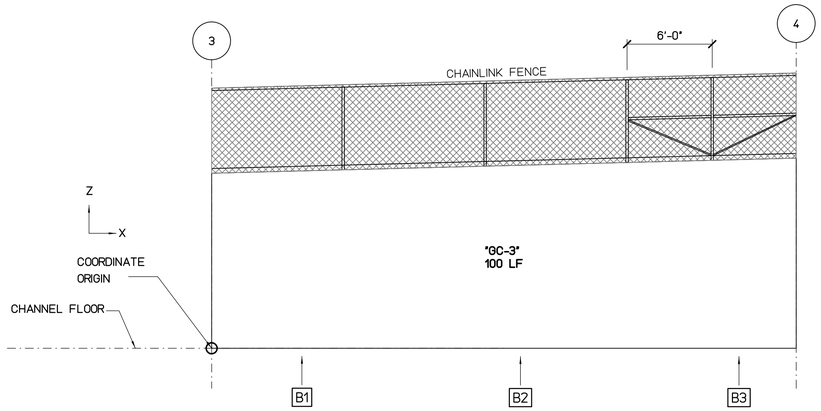


## WALL "B" FLATTEN VIEW

SCALE : 3/16" = 1'-0"

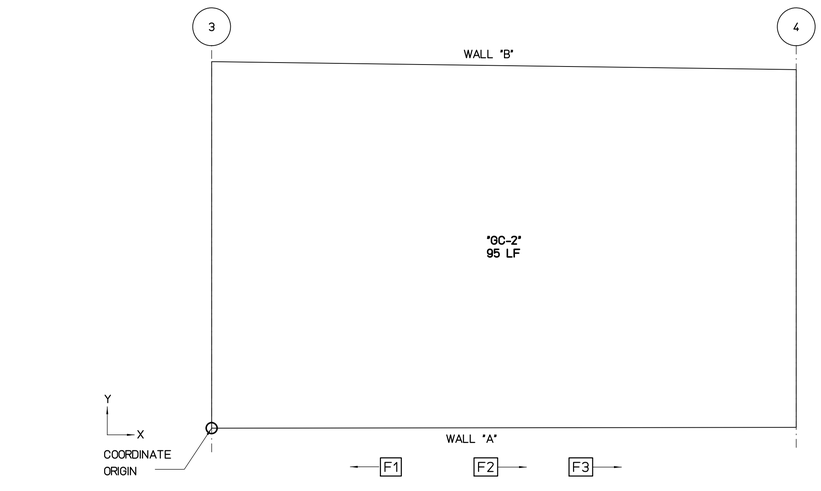


## FLOOR PLAN VIEW

SCALE : 3/16" = 1'-0"

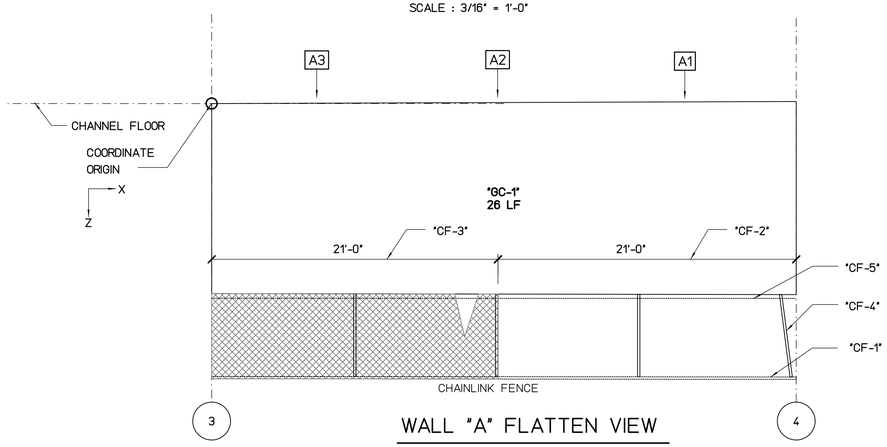


## WALL "A" FLATTEN VIEW

SCALE : 3/16" = 1'-0"

REPAIR LEGEND AND NOTES:

- [2] CRACK AND SPALL REPAIR TYPES, SEE SHEETS SR201 AND SR202 FOR DETAILS. TYPE [*] INDICATES NO-REPAIR
- (A) CHAINLINK FENCE REPAIR TYPES, SEE SHEETS SF201 AND SF202 FOR DETAILS
- 1.0 TOP OF WALL LEANING DISTANCE TOWARD CHANNEL IN INCHES, SEE SHEETS SL101 TO SL207 FOR CONCRETE LINING

PHOTO LEGEND:

- [A1] WALL "A" ELEVATION PHOTO IDENTIFICATION SEE FLATTEN VIEW FOR PHOTO LOCATION
- [B1] WALL "B" ELEVATION PHOTO IDENTIFICATION SEE FLATTEN VIEW FOR PHOTO LOCATION
- [F1] CHANNEL FLOOR PHOTO IDENTIFICATION SEE FLOOR PLAN VIEW FOR PHOTO LOCATION

B1



B2



B3



F1



F2



F3



A1



A2



A3



### SPALL REPAIR CHART

| MARK | LOCATION | REPAIR TYPE | SPALL DIMENSION L | SPALL DIMENSION W | SPALL DIMENSION D | SPALL VOLUME | SPALL CENTER COORDINATE X | SPALL CENTER COORDINATE Y OR Z | RATING |
|---|---|---|---|---|---|---|---|---|---|
| | | | | | | | | | |
| | | | | | | | | | |
| | | | | | | | | | |
| | | | | | | | | | |
| | | | | | | | | | |
| | | | | | | | | | |
| | | | | | | | | | |
| | | | | | | | | | |

### CHAINLINK FENCE REPAIR CHART

| MARK | LOCATION | REPAIR TYPE | POSTS | TOP RAIL | BOTTOM WIRE | BRACE | FABRIC |
|---|---|---|---|---|---|---|---|
| "CF-1" | WALL "A" | (C) | - | MISSING 42' | - | - | - |
| "CF-2" | WALL "A" | (E) | - | - | - | - | MISSING 21'x6' |
| "CF-3" | WALL "A" | (E) | | - | - | - | DAMAGED 21'x6' |
| "CF-4" | WALL "A" | (A) | DAMAGED 11 | | | - | - |
| "CF-5" | WALL "A" | (B) | MISSING 42" | | | - | - |
| | | | | | | | |
| | | | | | | | |
| | | | | | | | |
| | | | | | | | |

NOT IN CONTRACT

### CRACK REPAIR CHART

| MARK | LOCATION | REPAIR TYPE | GENERAL CRACKS (LF) | MAJOR CRACKS WIDTH (IN) | MAJOR CRACKS LENGTH (FT) | MAJOR CRACKS START PNT X | MAJOR CRACKS START PNT Y,Z | MAJOR CRACKS END PNT X | MAJOR CRACKS END PNT Y,Z | RATING |
|---|---|---|---|---|---|---|---|---|---|---|
| "GC-1" | WALL "A" | [*] | 26 | - | - | - | - | - | - | 8 |
| "GC-2" | FLOOR | [*] | 95 | - | - | - | - | - | - | 8 |
| "GC-3" | WALL "B" | [*] | 100 | - | - | - | - | - | - | 8 |
| | | | | | | | | | | |
| | | | | | | | | | | |
| | | | | | | | | | | |
| | | | | | | | | | | |

GRAPHIC SCALES:

0 1' 2' 4' 8' 12' 16'

3/16"=1'-0"

| REVISION NO. | DATE | REVISIONS | BY |
|---|---|---|---|
| | | | |

ATHER R. DAR
LICENSED PROFESSIONAL ENGINEER
No. 7808-S
HAWAII U.S.A.
Exp. Date: 4-30-20

THIS WORK WAS PREPARED BY ME OR UNDER MY SUPERVISION AND CONSTRUCTION OF THIS PROJECT WILL BE UNDER MY OBSERVATION

DEPARTMENT OF HAWAIIAN HOMELAND

# NANAKULI FLOOD CONTROL CHANNEL IMPROVEMENTS NANAKULI VALLEY, OAHU HAWAII

CHANNEL SEGMENT [004] REPAIR DETAILS

| | |
|---|---|
| DESIGNED BY: | TTP |
| DRAWN BY: | AK, AP, DL |
| CHECKED BY: | AD |
| SUPV: | |
| DATE: | 03/05/2019 |

HAWAII ENGINEERING GROUP, Inc.
Civil & Structural Engineers
1088 BISHOP STREET #2506
HONOLULU, HI 96813
Tel: 808-533-2092

JOB NO.

SHEET C004
11 OF 225 SHTS

FILE ___ DRAWER ___ ___ FOLDER ___ ___

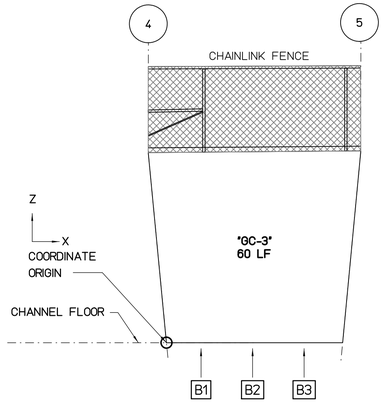


## WALL "B" FLATTEN VIEW

SCALE : 3/16" = 1'-0"

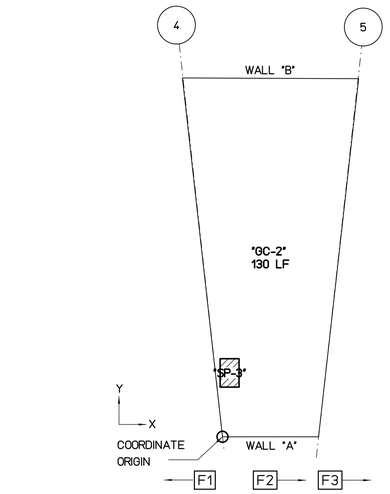


## FLOOR PLAN VIEW

SCALE : 3/16" = 1'-0"

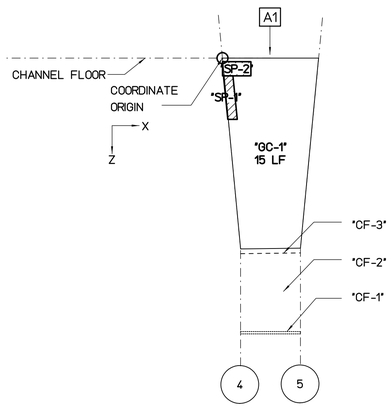


## WALL "A" FLATTEN VIEW

SCALE : 3/16" = 1'-0"

REPAIR LEGEND AND NOTES:

- [2] CRACK AND SPALL REPAIR TYPES, SEE SHEETS SR201 AND SR202 FOR DETAILS. TYPE [×] INDICATES NO-REPAIR
- (A) CHAINLINK FENCE REPAIR TYPES, SEE SHEETS SF201 AND SF202 FOR DETAILS
- [1.0] TOP OF WALL LEANING DISTANCE TOWARD CHANNEL IN INCHES, SEE SHEETS SL101 TO SL207 FOR CONCRETE LINING

PHOTO LEGEND:

- [A1] WALL "A" ELEVATION PHOTO IDENTIFICATION SEE FLATTEN VIEW FOR PHOTO LOCATION
- [B1] WALL "B" ELEVATION PHOTO IDENTIFICATION SEE FLATTEN VIEW FOR PHOTO LOCATION
- [F1] CHANNEL FLOOR PHOTO IDENTIFICATION SEE FLOOR PLAN VIEW FOR PHOTO LOCATION

B1



B2



B3



F1



F2

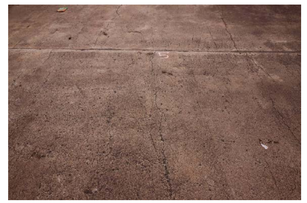

F3



A1



A2



A3



### SPALL REPAIR CHART

| MARK | LOCATION | REPAIR TYPE | SPALL DIMENSION L | SPALL DIMENSION W | SPALL DIMENSION D | SPALL VOLUME | SPALL CENTER COORDINATE X | SPALL CENTER COORDINATE Y OR Z | RATING |
|---|---|---|---|---|---|---|---|---|---|
| "SP-1" | WALL "A" | [3] | 8 | 36 | 2 | 576 | 0.25 | 2.75 | 7 |
| "SP-2" | WALL "A" | [3] | 24 | 12 | 3 | 864 | 1 | 0.75 | 7 |
| "SP-3" | FLOOR | [3] | 16 | 24 | 2 | 768 | 0.5 | 4.5 | 7 |

### CHAINLINK FENCE REPAIR CHART

| MARK | LOCATION | REPAIR TYPE | POSTS | TOP RAIL | BOTTOM WIRE | BRACE | FABRIC |
|---|---|---|---|---|---|---|---|
| "CF-1" | WALL "A" | (C) | - | MISSING 4' | - | - | - |
| "CF-2" | WALL "A" | (E) | - | - | - | - | MISSING 4'x6' |
| "CF-3" | WALL "A" | (D) | - | - | MISSING 4' | - | - |

NOT IN CONTRACT

### CRACK REPAIR CHART

| MARK | LOCATION | REPAIR TYPE | GENERAL CRACKS (LF) | MAJOR CRACKS WIDTH (IN) | MAJOR CRACKS LENGTH (FT) | MAJOR CRACKS START PNT X | MAJOR CRACKS START PNT Y,Z | MAJOR CRACKS END PNT X | MAJOR CRACKS END PNT Y,Z | RATING |
|---|---|---|---|---|---|---|---|---|---|---|
| "GC-1" | WALL "A" | [×] | 15 | - | - | - | - | - | - | 8 |
| "GC-2" | FLOOR | [×] | 130 | - | - | - | - | - | - | 8 |
| "GC-3" | WALL "B" | [×] | 60 | - | - | - | - | - | - | 8 |

GRAPHIC SCALES:

0 1' 2' 4' 8' 12' 16'

3/16"=1'-0"

| REVISION NO. | DATE | REVISIONS | BY |
|---|---|---|---|
| | | | |

ATHER R. DAR
LICENSED PROFESSIONAL ENGINEER
No. 7808-S
HAWAII U.S.A.

Exp. Date: 4-30-20

THIS WORK WAS PREPARED BY ME OR UNDER MY SUPERVISION AND CONSTRUCTION OF THIS PROJECT WILL BE UNDER MY OBSERVATION

DEPARTMENT OF HAWAIIAN HOMELAND

NANAKULI FLOOD CONTROL
CHANNEL IMPROVEMENTS
NANAKULI VALLEY, OAHU HAWAII

CHANNEL SEGMENT [005] REPAIR DETAILS

| | |
|---|---|
| DESIGNED BY: | TTP |
| DRAWN BY: | AK, AP, DL |
| CHECKED BY: | AD |
| SUPV: | |
| DATE: | 03/05/2019 |

HAWAII ENGINEERING GROUP, Inc.
Civil & Structural Engineers
1088 BISHOP STREET #2506
HONOLULU, HI 96813
Tel: 808-533-2092

JOB NO.

SHEET C005
12 OF 225 SHTS

FILE ___ DRAWER ___ ___ FOLDER ___ ___

Plot date: 15-Apr-2020

Full Size Plot

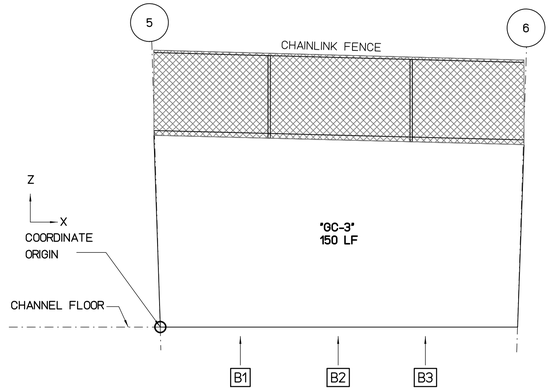


## WALL "B" FLATTEN VIEW

SCALE : 3/16" = 1'-0"

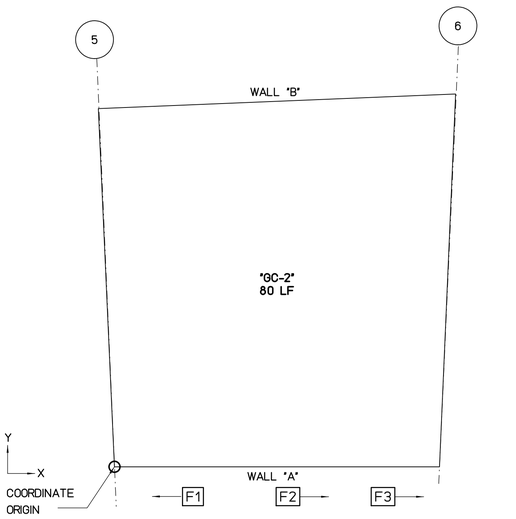


## FLOOR PLAN VIEW

SCALE : 3/16" = 1'-0"

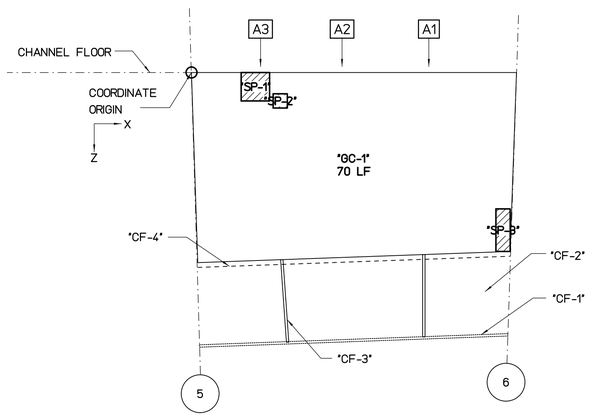


## WALL "A" FLATTEN VIEW

SCALE : 3/16" = 1'-0"

REPAIR LEGEND AND NOTES:

- [2] CRACK AND SPALL REPAIR TYPES, SEE SHEETS SR201 AND SR202 FOR DETAILS. TYPE [*] INDICATES NO-REPAIR
- (A) CHAINLINK FENCE REPAIR TYPES, SEE SHEETS SF201 AND SF202 FOR DETAILS
- 1.0> TOP OF WALL LEANING DISTANCE TOWARD CHANNEL IN INCHES, SEE SHEETS SL101 TO SL207 FOR CONCRETE LINING

PHOTO LEGEND:

- [A1] WALL "A" ELEVATION PHOTO IDENTIFICATION SEE FLATTEN VIEW FOR PHOTO LOCATION
- [B1] WALL "B" ELEVATION PHOTO IDENTIFICATION SEE FLATTEN VIEW FOR PHOTO LOCATION
- [F1] CHANNEL FLOOR PHOTO IDENTIFICATION SEE FLOOR PLAN VIEW FOR PHOTO LOCATION

B1



B2



B3



F1



F2



F3



A1



A2



A3



### SPALL REPAIR CHART

| MARK | LOCATION | REPAIR TYPE | SPALL DIMENSION L | SPALL DIMENSION W | SPALL DIMENSION D | SPALL VOLUME | SPALL CENTER COORDINATE X | SPALL CENTER COORDINATE Y OR Z | RATING |
|---|---|---|---|---|---|---|---|---|---|
| "SP-1" | WALL "A" | [3] | 24 | 24 | 2 | 1152 | 4.5 | 1 | 7 |
| "SP-2" | WALL "A" | [3] | 12 | 12 | 2 | 288 | 6.3 | 2 | 7 |
| "SP-3" | WALL "A" | [3] | 12 | 36 | 3 | 1296 | 21.5 | 11.5 | 7 |

### CHAINLINK FENCE REPAIR CHART

| MARK | LOCATION | REPAIR TYPE | POSTS | TOP RAIL | BOTTOM WIRE | BRACE | FABRIC |
|---|---|---|---|---|---|---|---|
| "CF-1" | WALL "A" | (C) | - | MISSING 22' | - | - | - |
| "CF-2" | WALL "A" | (E) | - | - | - | - | MISSING 22'x6' |
| "CF-3" | WALL "A" | (A) | BENT 1 | - | - | - | - |
| "CF-4" | WALL "A" | (B) | - | - | MISSING 22' | - | - |

NOT IN CONTRACT

### CRACK REPAIR CHART

| MARK | LOCATION | REPAIR TYPE | GENERAL CRACKS (LF) | MAJOR CRACKS WIDTH (IN) | MAJOR CRACKS LENGTH (FT) | MAJOR CRACKS START PNT X | MAJOR CRACKS START PNT Y,Z | MAJOR CRACKS END PNT X | MAJOR CRACKS END PNT Y,Z | RATING |
|---|---|---|---|---|---|---|---|---|---|---|
| "GC-1" | WALL "A" | [*] | 70 | - | - | - | - | - | - | 8 |
| "GC-2" | FLOOR | [*] | 80 | - | - | - | - | - | - | 8 |
| "GC-3" | WALL "B" | [*] | 150 | - | - | - | - | - | - | 8 |

GRAPHIC SCALES:

0 1' 2' 4' 8' 12' 16'

3/16"=1'-0"

| REVISION NO. | DATE | REVISIONS | BY |
|---|---|---|---|
| | | | |

ATHER R. DAR
LICENSED PROFESSIONAL ENGINEER
No. 7808-S
HAWAII U.S.A.
Exp. Date: 4-30-20

THIS WORK WAS PREPARED BY ME OR UNDER MY SUPERVISION AND CONSTRUCTION OF THIS PROJECT WILL BE UNDER MY OBSERVATION

DEPARTMENT OF HAWAIIAN HOMELAND

NANAKULI FLOOD CONTROL
CHANNEL IMPROVEMENTS
NANAKULI VALLEY, OAHU HAWAII

CHANNEL SEGMENT [006] REPAIR DETAILS

| | |
|---|---|
| DESIGNED BY: | TTP |
| DRAWN BY: | AK, AP, DL |
| CHECKED BY: | AD |
| SUPV: | |
| DATE: | 03/05/2019 |

HAWAII ENGINEERING GROUP, Inc.
Civil & Structural Engineers
1088 BISHOP STREET #2506
HONOLULU HI 96813
Tel: 808-533-2092

JOB NO.

SHEET C006
13 OF 225 SHTS

FILE ___ DRAWER ___ ___ FOLDER ___ ___

Plot date: 15-Apr-2020

Full Size Plot

Plot date: 15-Apr-2020
Full Size Plot

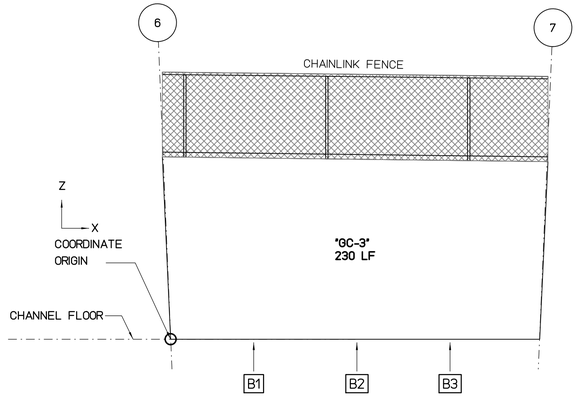


## WALL "B" FLATTEN VIEW

SCALE : 3/16" = 1'-0"

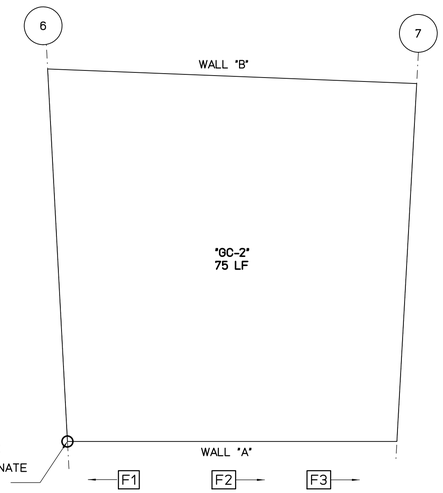


## FLOOR PLAN VIEW

SCALE : 3/16" = 1'-0"

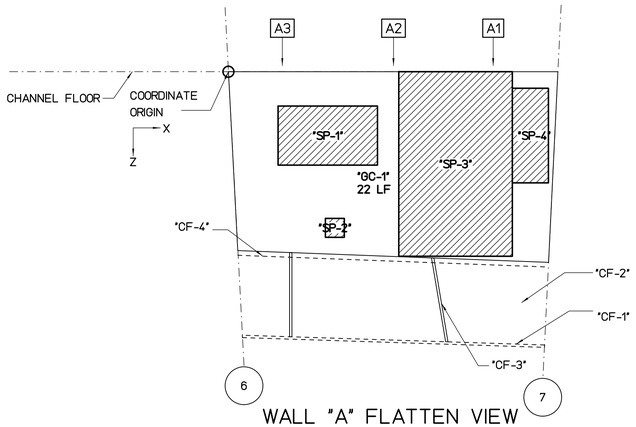


## WALL "A" FLATTEN VIEW

SCALE : 3/16" = 1'-0"

REPAIR LEGEND AND NOTES:

- [2] CRACK AND SPALL REPAIR TYPES, SEE SHEETS SR201 AND SR202 FOR DETAILS. TYPE [×] INDICATES NO-REPAIR
- (A) CHAINLINK FENCE REPAIR TYPES, SEE SHEETS SF201 AND SF202 FOR DETAILS
- 1.0> TOP OF WALL LEANING DISTANCE TOWARD CHANNEL IN INCHES, SEE SHEETS SL101 TO SL207 FOR CONCRETE LINING

PHOTO LEGEND:

- [A1] WALL "A" ELEVATION PHOTO IDENTIFICATION SEE FLATTEN VIEW FOR PHOTO LOCATION
- [B1] WALL "B" ELEVATION PHOTO IDENTIFICATION SEE FLATTEN VIEW FOR PHOTO LOCATION
- [F1] CHANNEL FLOOR PHOTO IDENTIFICATION SEE FLOOR PLAN VIEW FOR PHOTO LOCATION

B1



B2



B3



F1



F2



F3



A1



A2



A3



### SPALL REPAIR CHART

| MARK | LOCATION | REPAIR TYPE | SPALL DIMENSION L | SPALL DIMENSION W | SPALL DIMENSION D | SPALL VOLUME | SPALL CENTER COORDINATE X | SPALL CENTER COORDINATE Y OR Z | RATING |
|---|---|---|---|---|---|---|---|---|---|
| "SP-1" | WALL "A" | 3 | 84 | 50 | 2 | 8400 | 7 | 4.5 | 5 |
| "SP-2" | WALL "A" | 3 | 16 | 16 | 2 | 512 | 7.5 | 11 | 6 |
| "SP-3" | WALL "A" | 3 | 96 | 156 | 3 | 44928 | 16 | 6.5 | 5 |
| "SP-4" | WALL "A" | 3 | 31 | 80 | 2 | 5920 | 21 | 4.5 | 6 |

### CHAINLINK FENCE REPAIR CHART

| MARK | LOCATION | REPAIR TYPE | POSTS | TOP RAIL | BOTTOM WIRE | BRACE | FABRIC |
|---|---|---|---|---|---|---|---|
| "CF-1" | WALL "A" | C | - | MISSING 22' | - | | - |
| "CF-2" | WALL "A" | E | - | - | - | - | MISSING 22'x6' |
| "CF-3" | WALL "A" | A | BENT 1 | - | - | - | - |
| "CF-4" | WALL "A" | B | MISSING 24" | - | - | - | - |

NOT IN CONTRACT

### CRACK REPAIR CHART

| MARK | LOCATION | REPAIR TYPE | GENERAL CRACKS (LF) | MAJOR CRACKS WIDTH (IN) | MAJOR CRACKS LENGTH (FT) | MAJOR CRACKS START PNT X | MAJOR CRACKS START PNT Y,Z | MAJOR CRACKS END PNT X | MAJOR CRACKS END PNT Y,Z | RATING |
|---|---|---|---|---|---|---|---|---|---|---|
| "GC-1" | WALL "A" | × | 22 | - | - | - | - | - | - | 8 |
| "GC-2" | FLOOR | × | 75 | - | - | - | - | - | - | 8 |
| "GC-3" | WALL "B" | × | 230 | - | - | - | - | - | - | 8 |

GRAPHIC SCALES:

0 1' 2' 4' 8' 12' 16'

3/16"=1'-0"

| REVISION NO. | DATE | REVISIONS | BY |
|---|---|---|---|

ATHER R. DAR
LICENSED PROFESSIONAL ENGINEER
No. 7808-S
HAWAII U.S.A.
Exp. Date: 4-30-20

THIS WORK WAS PREPARED BY ME OR UNDER MY SUPERVISION AND CONSTRUCTION OF THIS PROJECT WILL BE UNDER MY OBSERVATION

DEPARTMENT OF HAWAIIAN HOMELAND

NANAKULI FLOOD CONTROL
CHANNEL IMPROVEMENTS
NANAKULI VALLEY, OAHU HAWAII

CHANNEL SEGMENT 007 REPAIR DETAILS

| | |
|---|---|
| DESIGNED BY: | TTP |
| DRAWN BY: | AK, AP, DL |
| CHECKED BY: | AD |
| SUPV: | |
| DATE: | 03/05/2019 |

HAWAII ENGINEERING GROUP, Inc.
Civil & Structural Engineers
1088 BISHOP STREET #2506
HONOLULU HI 96813
Tel: 808-533-2092

JOB NO.

SHEET C007
14 OF 225 SHTS

FILE ___ DRAWER ___ ___ FOLDER ___ ___

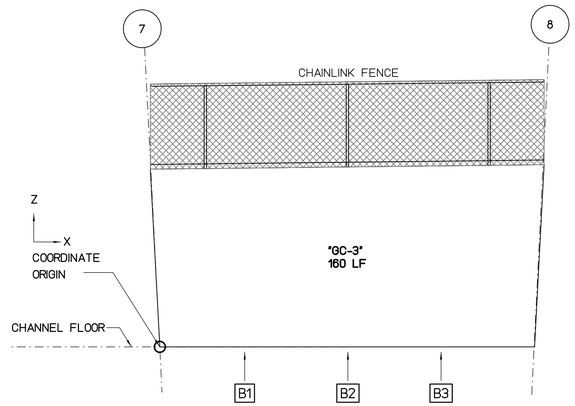


## WALL "B" FLATTEN VIEW

SCALE : 3/16" = 1'-0"

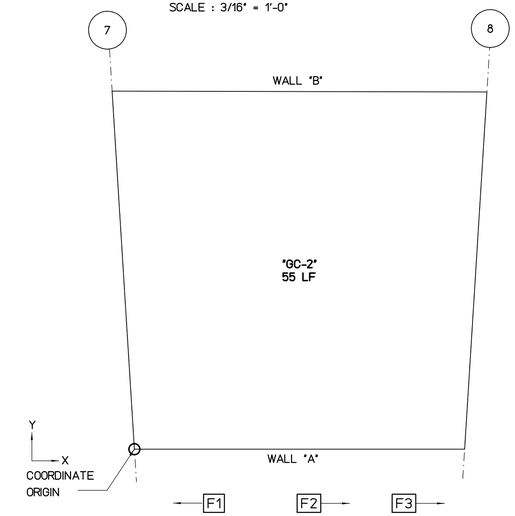


## FLOOR PLAN VIEW

SCALE : 3/16" = 1'-0"

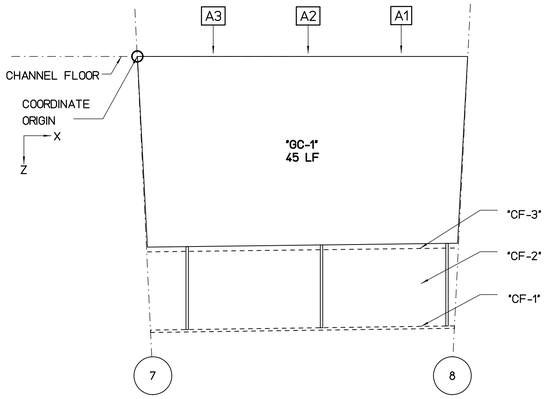


## WALL "A" FLATTEN VIEW

SCALE : 3/16" = 1'-0"

REPAIR LEGEND AND NOTES:

- [2] CRACK AND SPALL REPAIR TYPES, SEE SHEETS SR201 AND SR202 FOR DETAILS. TYPE [*] INDICATES NO-REPAIR
- (A) CHAINLINK FENCE REPAIR TYPES, SEE SHEETS SF201 AND SF202 FOR DETAILS
- [1.0] TOP OF WALL LEANING DISTANCE TOWARD CHANNEL IN INCHES, SEE SHEETS SL101 TO SL207 FOR CONCRETE LINING

PHOTO LEGEND:

- [A1] WALL "A" ELEVATION PHOTO IDENTIFICATION SEE FLATTEN VIEW FOR PHOTO LOCATION
- [B1] WALL "B" ELEVATION PHOTO IDENTIFICATION SEE FLATTEN VIEW FOR PHOTO LOCATION
- [F1] CHANNEL FLOOR PHOTO IDENTIFICATION SEE FLOOR PLAN VIEW FOR PHOTO LOCATION

B1



B2



B3



F1



F2



F3



A1



A2



A3



### SPALL REPAIR CHART

| MARK | LOCATION | REPAIR TYPE | SPALL DIMENSION L | SPALL DIMENSION W | SPALL DIMENSION D | SPALL VOLUME | SPALL CENTER COORDINATE X | SPALL CENTER COORDINATE Y OR Z | RATING |
|---|---|---|---|---|---|---|---|---|---|
| | | | | | | | | | |
| | | | | | | | | | |
| | | | | | | | | | |
| | | | | | | | | | |
| | | | | | | | | | |
| | | | | | | | | | |
| | | | | | | | | | |
| | | | | | | | | | |

### CHAINLINK FENCE REPAIR CHART

| MARK | LOCATION | REPAIR TYPE | POSTS | TOP RAIL | BOTTOM WIRE | BRACE | FABRIC |
|---|---|---|---|---|---|---|---|
| "CF-1" | WALL "A" | (C) | - | MISSING 22' | - | - | - |
| "CF-2" | WALL "A" | (E) | - | - | - | - | MISSING 22'x6' |
| "CF-3" | WALL "A" | (D) | - | - | MISSING 22' | - | - |
| | | | | | | | |
| | | | | | | | |
| | | | | | | | |
| | | | | | | | |
| | | | | | | | |
| | | | | | | | |

NOT IN CONTRACT

### CRACK REPAIR CHART

| MARK | LOCATION | REPAIR TYPE | GENERAL CRACKS (LF) | MAJOR CRACKS WIDTH (IN) | MAJOR CRACKS LENGTH (FT) | MAJOR CRACKS START PNT X | MAJOR CRACKS START PNT Y,Z | MAJOR CRACKS END PNT X | MAJOR CRACKS END PNT Y,Z | RATING |
|---|---|---|---|---|---|---|---|---|---|---|
| "GC-1" | WALL "A" | [*] | 45 | - | - | - | - | - | - | 8 |
| "GC-2" | FLOOR | [*] | 55 | - | - | - | - | | - | 8 |
| "GC-3" | WALL "B" | [*] | 160 | - | - | - | - | - | - | 8 |
| | | | | | | | | | | |
| | | | | | | | | | | |
| | | | | | | | | | | |
| | | | | | | | | | | |

GRAPHIC SCALES:

0 1' 2' 4' 8' 12' 16'

3/16"=1'-0"

| REVISION NO. | DATE | REVISIONS | BY |
|---|---|---|---|
| | | | |

ATHER R. DAR
LICENSED PROFESSIONAL ENGINEER
No. 7808-S
HAWAII U.S.A.

Exp. Date: 4-30-20

THIS WORK WAS PREPARED BY ME OR UNDER MY SUPERVISION AND CONSTRUCTION OF THIS PROJECT WILL BE UNDER MY OBSERVATION

DEPARTMENT OF HAWAIIAN HOMELAND

NANAKULI FLOOD CONTROL
CHANNEL IMPROVEMENTS
NANAKULI VALLEY, OAHU HAWAII

CHANNEL SEGMENT [008] REPAIR DETAILS

| | |
|---|---|
| DESIGNED BY: | TTP |
| DRAWN BY: | AK, AP, DL |
| CHECKED BY: | AD |
| SUPV: | |
| DATE: | 03/05/2019 |

HAWAII ENGINEERING GROUP, Inc.
Civil & Structural Engineers
1088 BISHOP STREET #2506
HONOLULU, HI 96813
Tel: 808-533-2092

JOB NO.

SHEET C008
15 OF 225 SHTS

FILE ___ DRAWER ___ ___ FOLDER ___ ___

Plot date: 15-Apr-2020

Full Size Plot

Plot date: 15-Apr-2020
Full Size Plot

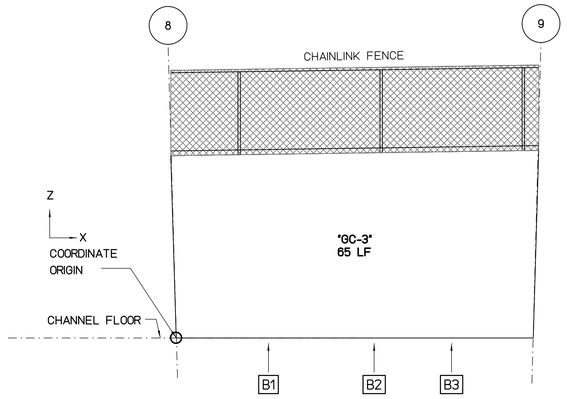


## WALL "B" FLATTEN VIEW

SCALE : 3/16" = 1'-0"

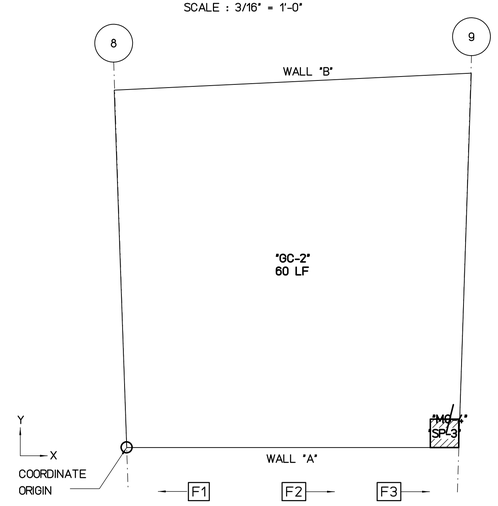


## FLOOR PLAN VIEW

SCALE : 3/16" = 1'-0"

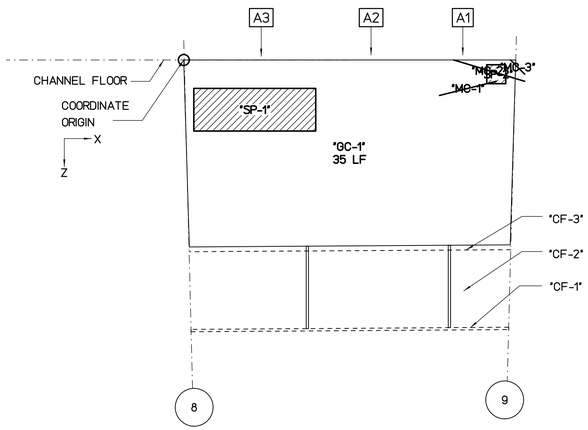


## WALL "A" FLATTEN VIEW

SCALE : 3/16" = 1'-0"

REPAIR LEGEND AND NOTES:

- 2 — CRACK AND SPALL REPAIR TYPES, SEE SHEETS SR201 AND SR202 FOR DETAILS. TYPE [*] INDICATES NO-REPAIR
- (A) — CHAINLINK FENCE REPAIR TYPES, SEE SHEETS SF201 AND SF202 FOR DETAILS
- 1.0 — TOP OF WALL LEANING DISTANCE TOWARD CHANNEL IN INCHES, SEE SHEETS SL101 TO SL207 FOR CONCRETE LINING

PHOTO LEGEND:

- A1 — WALL "A" ELEVATION PHOTO IDENTIFICATION SEE FLATTEN VIEW FOR PHOTO LOCATION
- B1 — WALL "B" ELEVATION PHOTO IDENTIFICATION SEE FLATTEN VIEW FOR PHOTO LOCATION
- F1 — CHANNEL FLOOR PHOTO IDENTIFICATION SEE FLOOR PLAN VIEW FOR PHOTO LOCATION

B1



B2



B3



F1



F2



F3



A1



A2



A3



### SPALL REPAIR CHART

| MARK | LOCATION | REPAIR TYPE | SPALL DIMENSION L | SPALL DIMENSION W | SPALL DIMENSION D | SPALL VOLUME | SPALL CENTER COORDINATE X | SPALL CENTER COORDINATE Y OR Z | RATING |
|---|---|---|---|---|---|---|---|---|---|
| "SP-1" | WALL "A" | 3 | 103 | 36 | 2 | 7416 | 5 | 3.5 | 6 |
| "SP-2" | WALL "A" | 3 | 16 | 16 | 2 | 512 | 22 | 1 | 6 |
| "SP-3" | FLOOR | 3 | 24 | 24 | 2 | 1152 | 22.5 | 0.5 | 6 |

### CHAINLINK FENCE REPAIR CHART

| MARK | LOCATION | REPAIR TYPE | POSTS | TOP RAIL | BOTTOM WIRE | BRACE | FABRIC |
|---|---|---|---|---|---|---|---|
| "CF-1" | WALL "A" | C | - | MISSING 23' | - | - | - |
| "CF-2" | WALL "A" | E | - | - | - | - | MISSING 23'x6' |
| "CF-3" | WALL "A" | D | - | - | MISSING 23' | - | - |

NOT IN CONTRACT

### CRACK REPAIR CHART

| MARK | LOCATION | REPAIR TYPE | GENERAL CRACKS (LF) | MAJOR CRACKS WIDTH (IN) | MAJOR CRACKS LENGTH (FT) | MAJOR CRACKS START PNT X | MAJOR CRACKS START PNT Y,Z | MAJOR CRACKS END PNT X | MAJOR CRACKS END PNT Y,Z | RATING |
|---|---|---|---|---|---|---|---|---|---|---|
| "MC-1" | WALL "A" | 1 | - | 1 | 5 | 18 | 2.5 | 22 | 1.5 | 6 |
| "MC-2" | WALL "A" | 1 | - | 0.75 | 5.5 | 19 | 0 | 24 | 1.5 | 6 |
| "MC-3" | WALL "A" | 1 | - | 1 | 2 | 23 | 0 | 24 | 1 | 6 |
| "MC-4" | FLOOR | 1 | - | 0.5 | 3 | 22.5 | 1 | 23 | 3 | 7 |
| "GC-1" | WALL "A" | * | 35 | - | - | - | - | - | - | 8 |
| "GC-2" | FLOOR | * | 60 | - | - | - | - | - | - | 8 |
| "GC-3" | WALL "B" | * | 65 | - | - | - | - | - | - | 8 |

GRAPHIC SCALES:

0 1' 2' 4' 8' 12' 16'

3/16"=1'-0"

| REVISION NO. | DATE | REVISIONS | BY |
|---|---|---|---|
| | | | |

ATHER R. DAR
LICENSED PROFESSIONAL ENGINEER
No. 7808-S
HAWAII U.S.A.
Exp. Date: 4-30-20

THIS WORK WAS PREPARED BY ME OR UNDER MY SUPERVISION AND CONSTRUCTION OF THIS PROJECT WILL BE UNDER MY OBSERVATION

DEPARTMENT OF HAWAIIAN HOMELAND

# NANAKULI FLOOD CONTROL CHANNEL IMPROVEMENTS NANAKULI VALLEY, OAHU HAWAII

CHANNEL SEGMENT 009 REPAIR DETAILS

| | |
|---|---|
| DESIGNED BY: | TTP |
| DRAWN BY: | AK, AP, DL |
| CHECKED BY: | AD |
| SUPV: | |
| DATE: | 03/05/2019 |

HAWAII ENGINEERING GROUP, Inc.
Civil & Structural Engineers
1088 BISHOP STREET #2506
HONOLULU, HI 96813
Tel: 808-533-2092

JOB NO.

SHEET C009
16 OF 225 SHTS

FILE ___ DRAWER ___ ___ FOLDER ___ ___

Plot date: 15-Apr-2020
Full Size Plot

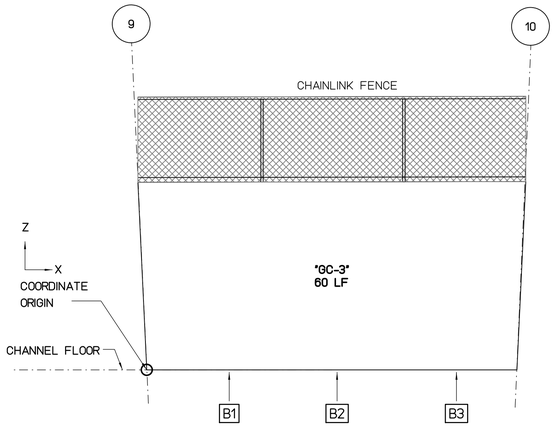


## WALL "B" FLATTEN VIEW

SCALE : 3/16" = 1'-0"

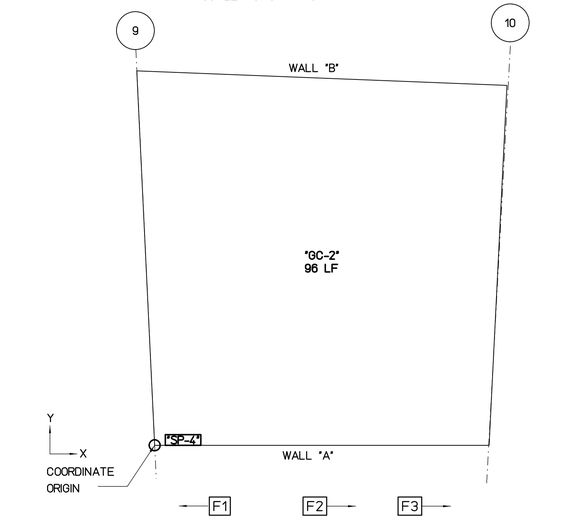


## FLOOR PLAN VIEW

SCALE : 3/16" = 1'-0"

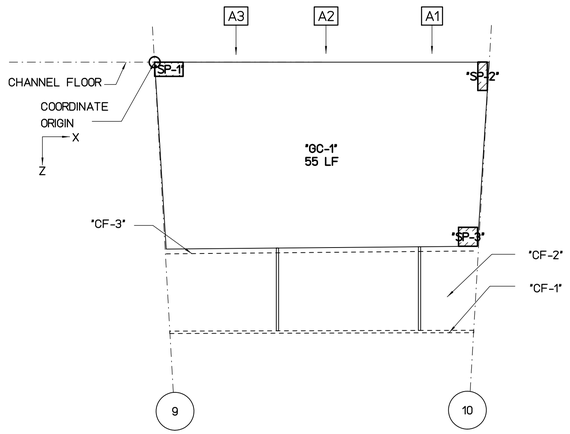


## WALL "A" FLATTEN VIEW

SCALE : 3/16" = 1'-0"

REPAIR LEGEND AND NOTES:

- [2] CRACK AND SPALL REPAIR TYPES, SEE SHEETS SR201 AND SR202 FOR DETAILS. TYPE [*] INDICATES NO-REPAIR
- (A) CHAINLINK FENCE REPAIR TYPES, SEE SHEETS SF201 AND SF202 FOR DETAILS
- 1.0 TOP OF WALL LEANING DISTANCE TOWARD CHANNEL IN INCHES, SEE SHEETS SL101 TO SL207 FOR CONCRETE LINING

PHOTO LEGEND:

- A1 WALL "A" ELEVATION PHOTO IDENTIFICATION SEE FLATTEN VIEW FOR PHOTO LOCATION
- B1 WALL "B" ELEVATION PHOTO IDENTIFICATION SEE FLATTEN VIEW FOR PHOTO LOCATION
- F1 CHANNEL FLOOR PHOTO IDENTIFICATION SEE FLOOR PLAN VIEW FOR PHOTO LOCATION

B1



B2



B3



F1



F2



F3



A1



A2



A3



### SPALL REPAIR CHART

| MARK | LOCATION | REPAIR TYPE | SPALL DIMENSION L | SPALL DIMENSION W | SPALL DIMENSION D | SPALL VOLUME | SPALL CENTER COORDINATE X | SPALL CENTER COORDINATE Y OR Z | RATING |
|---|---|---|---|---|---|---|---|---|---|
| "SP-1" | WALL "A" | [3] | 24 | 12 | 2 | 576 | 1 | 0.5 | 6 |
| "SP-2" | WALL "A" | [3] | 8 | 24 | 2 | 384 | 23.1 | 1 | 6 |
| "SP-3" | WALL "A" | [3] | 16 | 16 | 2 | 512 | 22.1 | 12.3 | 6 |
| "SP-4" | FLOOR | [3] | 30 | 9 | 2 | 540 | 2 | 0.4 | 6 |

### CHAINLINK FENCE REPAIR CHART

| MARK | LOCATION | REPAIR TYPE | POSTS | TOP RAIL | BOTTOM WIRE | BRACE | FABRIC |
|---|---|---|---|---|---|---|---|
| "CF-1" | WALL "A" | (C) | - | MISSING 22' | - | - | - |
| "CF-2" | WALL "A" | (E) | - | - | - | - | MISSING 22'x6' |
| "CF-3" | WALL "A" | (D) | - | - | MISSING 22' | - | - |

NOT IN CONTRACT

### CRACK REPAIR CHART

| MARK | LOCATION | REPAIR TYPE | GENERAL CRACKS (LF) | MAJOR CRACKS WIDTH (IN) | MAJOR CRACKS LENGTH (FT) | MAJOR CRACKS START PNT X | MAJOR CRACKS START PNT Y,Z | MAJOR CRACKS END PNT X | MAJOR CRACKS END PNT Y,Z | RATING |
|---|---|---|---|---|---|---|---|---|---|---|
| "GC-1" | WALL "A" | [*] | 55 | - | - | - | - | - | - | 8 |
| "GC-2" | FLOOR | [*] | 96 | - | - | - | - | - | - | 8 |
| "GC-3" | WALL "B" | [*] | 60 | - | - | - | - | - | - | 8 |

GRAPHIC SCALES:

0 1' 2' 4' 8' 12' 16'

3/16"=1'-0"

| REVISION NO. | DATE | REVISIONS | BY |
|---|---|---|---|

ATHER R. DAR
LICENSED PROFESSIONAL ENGINEER
No. 7808-S
HAWAII U.S.A.
Exp. Date: 4-30-20

THIS WORK WAS PREPARED BY ME OR UNDER MY SUPERVISION AND CONSTRUCTION OF THIS PROJECT WILL BE UNDER MY OBSERVATION

DEPARTMENT OF HAWAIIAN HOMELAND

# NANAKULI FLOOD CONTROL CHANNEL IMPROVEMENTS NANAKULI VALLEY, OAHU HAWAII

CHANNEL SEGMENT [010] REPAIR DETAILS

| | |
|---|---|
| DESIGNED BY: | TTP |
| DRAWN BY: | AK, AP, DL |
| CHECKED BY: | AD |
| SUPV: | |
| DATE: | 03/05/2019 |

HAWAII ENGINEERING GROUP, Inc.
Civil & Structural Engineers
1088 BISHOP STREET #2506
HONOLULU, HI 96813
Tel: 808-533-2092

JOB NO.

SHEET C010
17 OF 225 SHTS

FILE ___ DRAWER ___ ___ FOLDER ___ ___

Plot date: 15-Apr-2020
Full Size Plot

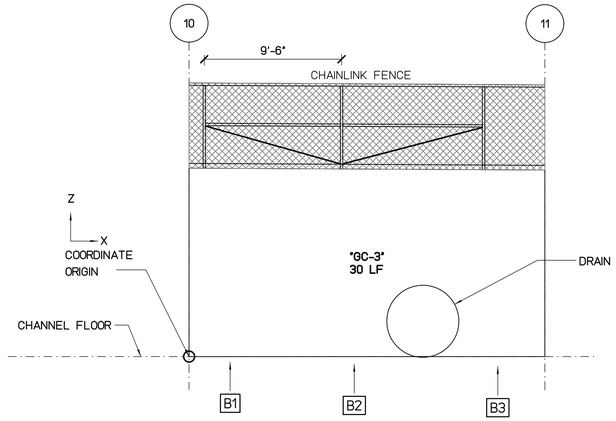


WALL "B" FLATTEN VIEW

SCALE : 3/16" = 1'-0"

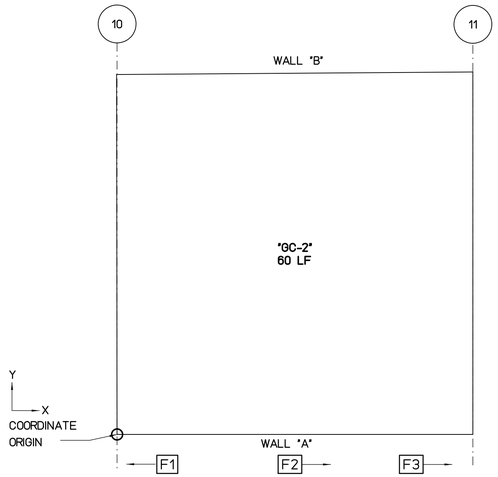


FLOOR PLAN VIEW

SCALE : 3/16" = 1'-0"

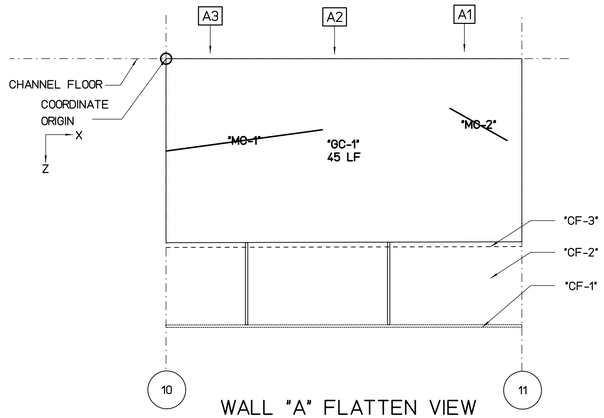


WALL "A" FLATTEN VIEW

SCALE : 3/16" = 1'-0"

REPAIR LEGEND AND NOTES:

- 2 — CRACK AND SPALL REPAIR TYPES, SEE SHEETS SR201 AND SR202 FOR DETAILS. TYPE ✖ INDICATES NO-REPAIR
- (A) — CHAINLINK FENCE REPAIR TYPES, SEE SHEETS SF201 AND SF202 FOR DETAILS
- 1.0 — TOP OF WALL LEANING DISTANCE TOWARD CHANNEL IN INCHES, SEE SHEETS SL101 TO SL207 FOR CONCRETE LINING

PHOTO LEGEND:

- A1 — WALL "A" ELEVATION PHOTO IDENTIFICATION SEE FLATTEN VIEW FOR PHOTO LOCATION
- B1 — WALL "B" ELEVATION PHOTO IDENTIFICATION SEE FLATTEN VIEW FOR PHOTO LOCATION
- F1 — CHANNEL FLOOR PHOTO IDENTIFICATION SEE FLOOR PLAN VIEW FOR PHOTO LOCATION

B1



B2



B3



F1



F2



F3



A1



A2



A3



SPALL REPAIR CHART

| MARK | LOCATION | REPAIR TYPE | SPALL DIMENSION | | | SPALL VOLUME | SPALL CENTER COORDINATE | | RATING |
|---|---|---|---|---|---|---|---|---|---|
| | | | L | W | D | | X | Y OR Z | |
| | | | | | | | | | |
| | | | | | | | | | |
| | | | | | | | | | |
| | | | | | | | | | |
| | | | | | | | | | |
| | | | | | | | | | |
| | | | | | | | | | |
| | | | | | | | | | |

CHAINLINK FENCE REPAIR CHART

| MARK | LOCATION | REPAIR TYPE | POSTS | TOP RAIL | BOTTOM WIRE | BRACE | FABRIC |
|---|---|---|---|---|---|---|---|
| "CF-1" | WALL "A" | (C) | - | MISSING 25' | - | - | - |
| "CF-2" | WALL "A" | (E) | - | - | - | - | MISSING 25'x6' |
| "CF-3" | WALL "A" | (D) | - | - | MISSING 25' | - | - |

NOT IN CONTRACT

CRACK REPAIR CHART

| MARK | LOCATION | REPAIR TYPE | GENERAL CRACKS (LF) | MAJOR CRACKS | | | | | | RATING |
|---|---|---|---|---|---|---|---|---|---|---|
| | | | | WIDTH (IN) | LENGTH (FT) | START PNT X | START PNT Y,Z | END PNT X | END PNT Y,Z | |
| "MC-1" | WALL "A" | 1 | - | 0.38 | 12 | 0 | 6.5 | 11 | 5 | 7 |
| "MC-2" | WALL "A" | 1 | - | 0.38 | 5 | 20 | 3.5 | 24 | 5.75 | 7 |
| "GC-1" | WALL "A" | ✖ | 45 | - | - | - | - | - | - | 8 |
| "GC-2" | FLOOR | ✖ | 60 | - | - | - | - | - | - | 8 |
| "GC-3" | WALL "B" | ✖ | 30 | - | - | - | - | - | - | 8 |
| | | | | | | | | | | |
| | | | | | | | | | | |

GRAPHIC SCALES:

0 1' 2' 4' 8' 12' 16'

3/16"=1'-0"

| REVISION NO. | DATE | REVISIONS | BY |
|---|---|---|---|
| | | | |

ARTHER R. DAR
LICENSED PROFESSIONAL ENGINEER
No. 7808-S
HAWAII U.S.A.

Exp. Date: 4-30-20

THIS WORK WAS PREPARED BY ME OR UNDER MY SUPERVISION AND CONSTRUCTION OF THIS PROJECT WILL BE UNDER MY OBSERVATION

DEPARTMENT OF HAWAIIAN HOMELAND

# NANAKULI FLOOD CONTROL CHANNEL IMPROVEMENTS NANAKULI VALLEY, OAHU HAWAII

CHANNEL SEGMENT 011 REPAIR DETAILS

| | |
|---|---|
| DESIGNED BY: | TTP |
| DRAWN BY: | AK, AP, DL |
| CHECKED BY: | AD |
| SUPV: | |
| DATE: | 03/05/2019 |

HAWAII ENGINEERING GROUP, Inc.
Civil & Structural Engineers
1088 BISHOP STREET #2506
HONOLULU, HI 96813
Tel: 808-533-2092

JOB NO.

SHEET C011

18 OF 225 SHTS

FILE ___ DRAWER ___ ___ FOLDER ___ ___

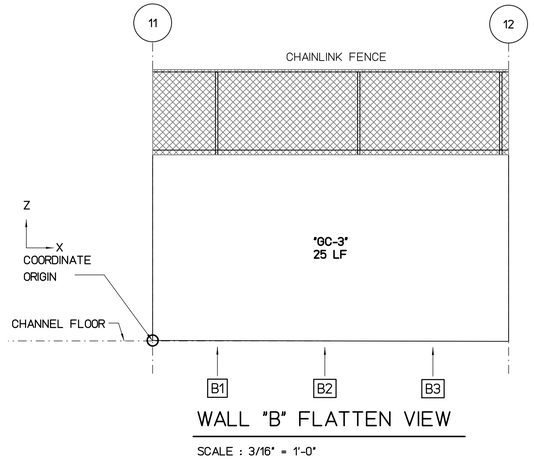


WALL "B" FLATTEN VIEW

SCALE : 3/16" = 1'-0"

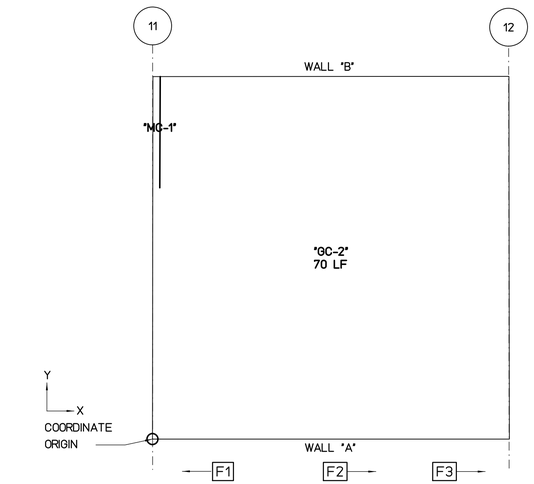


FLOOR PLAN VIEW

SCALE : 3/16" = 1'-0"

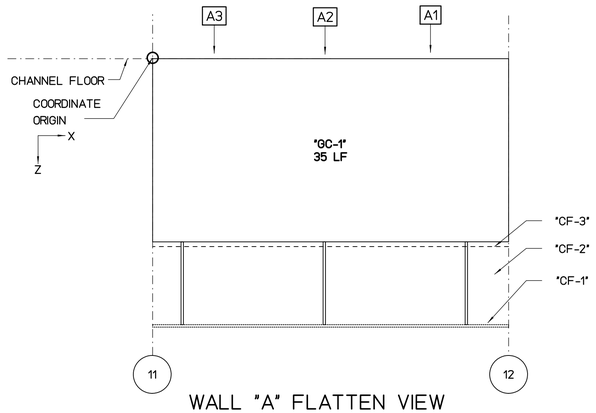


WALL "A" FLATTEN VIEW

SCALE : 3/16" = 1'-0"

REPAIR LEGEND AND NOTES:

- 2 — CRACK AND SPALL REPAIR TYPES, SEE SHEETS SR201 AND SR202 FOR DETAILS. TYPE ✖ INDICATES NO-REPAIR
- Ⓐ — CHAINLINK FENCE REPAIR TYPES, SEE SHEETS SF201 AND SF202 FOR DETAILS
- 1.0 — TOP OF WALL LEANING DISTANCE TOWARD CHANNEL IN INCHES, SEE SHEETS SL101 TO SL207 FOR CONCRETE LINING

PHOTO LEGEND:

- A1 — WALL "A" ELEVATION PHOTO IDENTIFICATION SEE FLATTEN VIEW FOR PHOTO LOCATION
- B1 — WALL "B" ELEVATION PHOTO IDENTIFICATION SEE FLATTEN VIEW FOR PHOTO LOCATION
- F1 — CHANNEL FLOOR PHOTO IDENTIFICATION SEE FLOOR PLAN VIEW FOR PHOTO LOCATION

B1



B2



B3



F1



F2



F3



A1



A2



A3



SPALL REPAIR CHART

| MARK | LOCATION | REPAIR TYPE | SPALL DIMENSION | | | SPALL VOLUME | SPALL CENTER COORDINATE | | RATING |
|---|---|---|---|---|---|---|---|---|---|
| | | | L | W | D | | X | Y OR Z | |
| | | | | | | | | | |
| | | | | | | | | | |
| | | | | | | | | | |
| | | | | | | | | | |
| | | | | | | | | | |
| | | | | | | | | | |
| | | | | | | | | | |
| | | | | | | | | | |

CHAINLINK FENCE REPAIR CHART

| MARK | LOCATION | REPAIR TYPE | POSTS | TOP RAIL | BOTTOM WIRE | BRACE | FABRIC |
|---|---|---|---|---|---|---|---|
| "CF-1" | WALL "A" | Ⓒ | - | MISSING 25' | - | - | - |
| "CF-2" | WALL "A" | Ⓔ | - | - | - | - | MISSING 25'x6' |
| "CF-3" | WALL "A" | Ⓓ | - | - | MISSING 25' | - | - |

NOT IN CONTRACT

CRACK REPAIR CHART

| MARK | LOCATION | REPAIR TYPE | GENERAL CRACKS (LF) | MAJOR CRACKS | | | | | | RATING |
|---|---|---|---|---|---|---|---|---|---|---|
| | | | | WIDTH (IN) | LENGTH (FT) | START PNT X | START PNT Y,Z | END PNT X | END PNT Y,Z | |
| "MC-1" | FLOOR | 1 | - | 1 | 9 | 0.5 | 17.5 | 0.5 | 26 | 6 |
| "GC-1" | WALL "A" | ✖ | 35 | - | - | - | - | - | - | 8 |
| "GC-2" | FLOOR | ✖ | 70 | - | - | - | - | - | - | 8 |
| "GC-3" | WALL "B" | ✖ | 25 | - | - | - | - | - | - | 8 |
| | | | | | | | | | | |
| | | | | | | | | | | |
| | | | | | | | | | | |

GRAPHIC SCALES:

0 1' 2' 4' 8' 12' 16'

3/16"=1'-0"

| REVISION NO. | DATE | REVISIONS | BY |
|---|---|---|---|
| | | | |

ATHER R. DAR
LICENSED PROFESSIONAL ENGINEER
No. 7808-S
HAWAII U.S.A.

Exp. Date: 4-30-20

THIS WORK WAS PREPARED BY ME OR UNDER MY SUPERVISION AND CONSTRUCTION OF THIS PROJECT WILL BE UNDER MY OBSERVATION

DEPARTMENT OF HAWAIIAN HOMELAND

# NANAKULI FLOOD CONTROL CHANNEL IMPROVEMENTS NANAKULI VALLEY, OAHU HAWAII

CHANNEL SEGMENT 012 REPAIR DETAILS

| | |
|---|---|
| DESIGNED BY: | TTP |
| DRAWN BY: | AK, AP, DL |
| CHECKED BY: | AD |
| SUPV: | |
| DATE: | 03/05/2019 |


HAWAII ENGINEERING GROUP, Inc.
Civil & Structural Engineers
1088 BISHOP STREET #2506
HONOLULU, HI 96813
Tel: 808-533-2092


JOB NO.

SHEET C012

19 OF 225 SHTS

FILE ___ DRAWER ___ ___ FOLDER ___ ___

Plot date: 15-Apr-2020

Full Size Plot

Plot date: 15-Apr-2020
Full Size Plot

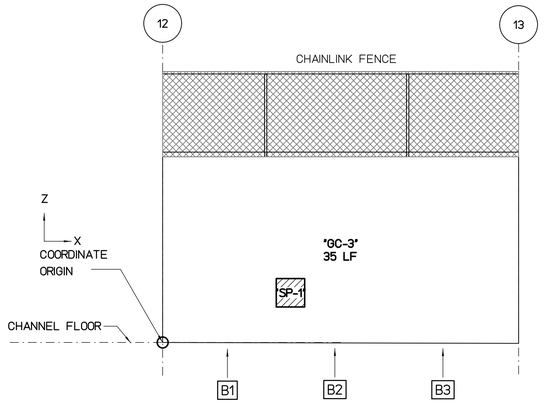


## WALL "B" FLATTEN VIEW

SCALE : 3/16" = 1'-0"

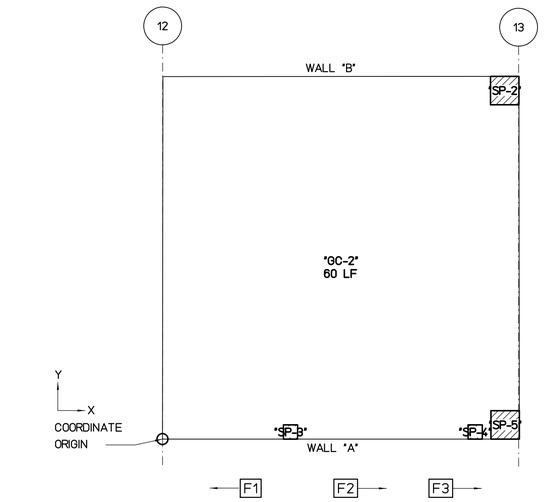


## FLOOR PLAN VIEW

SCALE : 3/16" = 1'-0"

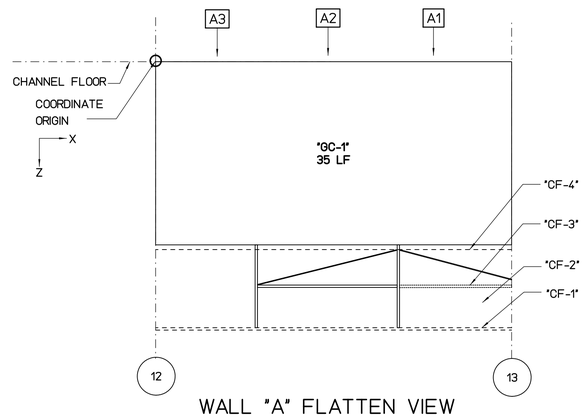


## WALL "A" FLATTEN VIEW

SCALE : 3/16" = 1'-0"

REPAIR LEGEND AND NOTES:

- 2 — CRACK AND SPALL REPAIR TYPES, SEE SHEETS SR201 AND SR202 FOR DETAILS. TYPE [*] INDICATES NO-REPAIR
- (A) — CHAINLINK FENCE REPAIR TYPES, SEE SHEETS SF201 AND SF202 FOR DETAILS
- 1.0 — TOP OF WALL LEANING DISTANCE TOWARD CHANNEL IN INCHES, SEE SHEETS SL101 TO SL207 FOR CONCRETE LINING

PHOTO LEGEND:

- A1 — WALL "A" ELEVATION PHOTO IDENTIFICATION SEE FLATTEN VIEW FOR PHOTO LOCATION
- B1 — WALL "B" ELEVATION PHOTO IDENTIFICATION SEE FLATTEN VIEW FOR PHOTO LOCATION
- F1 — CHANNEL FLOOR PHOTO IDENTIFICATION SEE FLOOR PLAN VIEW FOR PHOTO LOCATION

B1



B2



B3



F1



F2



F3



A1



A2



A3



### SPALL REPAIR CHART

| MARK | LOCATION | REPAIR TYPE | SPALL DIMENSION L | SPALL DIMENSION W | SPALL DIMENSION D | SPALL VOLUME | SPALL CENTER COORDINATE X | SPALL CENTER COORDINATE Y OR Z | RATING |
|---|---|---|---|---|---|---|---|---|---|
| "SP-1" | WALL "B" | 3 | 24 | 24 | 2 | 1152 | 9 | 3.5 | 7 |
| "SP-2" | FLOOR | 3 | 24 | 24 | 2 | 1152 | 24.1 | 24.3 | 7 |
| "SP-3" | FLOOR | 3 | 12 | 12 | 2 | 288 | 9 | 0.3 | 7 |
| "SP-4" | FLOOR | 3 | 12 | 12 | 2 | 288 | 22 | 0.3 | 7 |
| "SP-5" | FLOOR | 3 | 24 | 24 | 2 | 1152 | 24.1 | 0.8 | 7 |

### CHAINLINK FENCE REPAIR CHART

| MARK | LOCATION | REPAIR TYPE | POSTS | TOP RAIL | BOTTOM WIRE | BRACE | FABRIC |
|---|---|---|---|---|---|---|---|
| "CF-1" | WALL "A" | C | - | MISSING 25' | - | - | - |
| "CF-2" | WALL "A" | E | - | - | - | - | MISSING 25'x6' |
| "CF-3" | WALL "A" | B | - | - | - | MISSING 1 | - |
| "CF-4" | WALL "A" | D | - | - | MISSING 25' | - | - |

NOT IN CONTRACT

### CRACK REPAIR CHART

| MARK | LOCATION | REPAIR TYPE | GENERAL CRACKS (LF) | MAJOR CRACKS WIDTH (IN) | MAJOR CRACKS LENGTH (FT) | MAJOR CRACKS START PNT X | MAJOR CRACKS START PNT Y,Z | MAJOR CRACKS END PNT X | MAJOR CRACKS END PNT Y,Z | RATING |
|---|---|---|---|---|---|---|---|---|---|---|
| "GC-1" | WALL "A" | * | 35 | - | - | - | - | - | - | 8 |
| "GC-2" | FLOOR | * | 60 | - | - | - | - | - | - | 8 |
| "GC-3" | WALL "B" | * | 35 | - | - | - | - | - | - | 8 |

GRAPHIC SCALES:

0 1' 2' 4' 8' 12' 16'

3/16"=1'-0"

| REVISION NO. | DATE | REVISIONS | BY |
|---|---|---|---|

ATHER R. DAR
LICENSED PROFESSIONAL ENGINEER
No. 7808-S
HAWAII U.S.A.
Exp. Date: 4-30-20

THIS WORK WAS PREPARED BY ME OR UNDER MY SUPERVISION AND CONSTRUCTION OF THIS PROJECT WILL BE UNDER MY OBSERVATION

DEPARTMENT OF HAWAIIAN HOMELAND

NANAKULI FLOOD CONTROL
CHANNEL IMPROVEMENTS
NANAKULI VALLEY, OAHU HAWAII

CHANNEL SEGMENT 013 REPAIR DETAILS

| | |
|---|---|
| DESIGNED BY: | TTP |
| DRAWN BY: | AK, AP, DL |
| CHECKED BY: | AD |
| SUPV: | |
| DATE: | 03/05/2019 |

HAWAII ENGINEERING GROUP, Inc.
Civil & Structural Engineers
1088 BISHOP STREET #2506
HONOLULU, HI 96813
Tel: 808-533-2092

JOB NO.

SHEET C013
20 OF 225 SHTS

FILE ___ DRAWER ___ ___ FOLDER ___ ___

Plot date: 15-Apr-2020
Full Size Plot

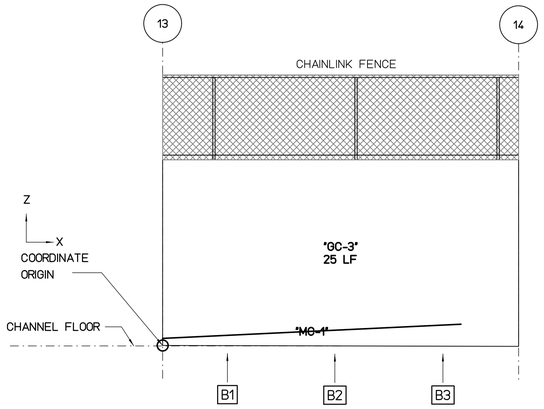


## WALL "B" FLATTEN VIEW

SCALE : 3/16" = 1'-0"

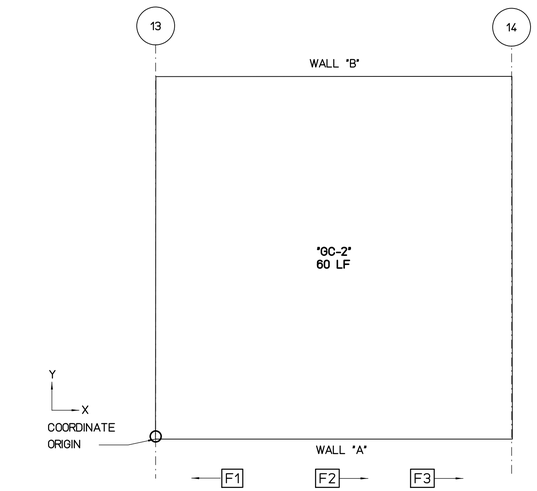


## FLOOR PLAN VIEW

SCALE : 3/16" = 1'-0"

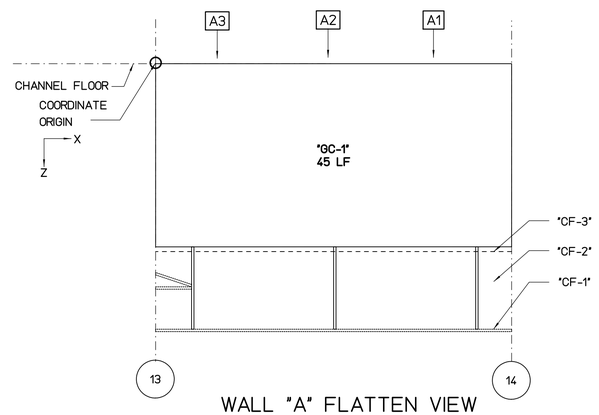


## WALL "A" FLATTEN VIEW

SCALE : 3/16" = 1'-0"

REPAIR LEGEND AND NOTES:

- 2 — CRACK AND SPALL REPAIR TYPES, SEE SHEETS SR201 AND SR202 FOR DETAILS. TYPE [*] INDICATES NO-REPAIR
- (A) — CHAINLINK FENCE REPAIR TYPES, SEE SHEETS SF201 AND SF202 FOR DETAILS
- 1.0 — TOP OF WALL LEANING DISTANCE TOWARD CHANNEL IN INCHES, SEE SHEETS SL101 TO SL207 FOR CONCRETE LINING

PHOTO LEGEND:

- A1 — WALL "A" ELEVATION PHOTO IDENTIFICATION SEE FLATTEN VIEW FOR PHOTO LOCATION
- B1 — WALL "B" ELEVATION PHOTO IDENTIFICATION SEE FLATTEN VIEW FOR PHOTO LOCATION
- F1 — CHANNEL FLOOR PHOTO IDENTIFICATION SEE FLOOR PLAN VIEW FOR PHOTO LOCATION

B1



B2



B3



F1



F2



F3



A1



A2



A3



### SPALL REPAIR CHART

| MARK | LOCATION | REPAIR TYPE | SPALL DIMENSION | | | SPALL VOLUME | SPALL CENTER COORDINATE | | RATING |
|---|---|---|---|---|---|---|---|---|---|
| | | | L | W | D | | X | Y OR Z | |
| | | | | | | | | | |
| | | | | | | | | | |
| | | | | | | | | | |
| | | | | | | | | | |
| | | | | | | | | | |
| | | | | | | | | | |
| | | | | | | | | | |
| | | | | | | | | | |

### CHAINLINK FENCE REPAIR CHART

| MARK | LOCATION | REPAIR TYPE | POSTS | TOP RAIL | BOTTOM WIRE | BRACE | FABRIC |
|---|---|---|---|---|---|---|---|
| "CF-1" | WALL "A" | (C) | - | MISSING 25' | - | - | - |
| "CF-2" | WALL "A" | (E) | - | - | - | - | MISSING 25'x6' |
| "CF-3" | WALL "A" | (D) | - | - | MISSING 25' | - | - |

NOT IN CONTRACT

### CRACK REPAIR CHART

| MARK | LOCATION | REPAIR TYPE | GENERAL CRACKS (LF) | MAJOR CRACKS | | | | | | RATING |
|---|---|---|---|---|---|---|---|---|---|---|
| | | | | WIDTH (IN) | LENGTH (FT) | START PNT X | START PNT Y,Z | END PNT X | END PNT Y,Z | |
| "MC-1" | WALL "B" | 1 | - | 0.38 | 22 | 0 | 0.5 | 21 | 1.5 | 6 |
| "GC-1" | WALL "A" | * | 45 | - | - | - | - | - | - | 8 |
| "GC-2" | FLOOR | * | 60 | - | - | - | - | - | - | 8 |
| "GC-3" | WALL "B" | * | 25 | - | - | - | - | - | - | 8 |
| | | | | | | | | | | |
| | | | | | | | | | | |
| | | | | | | | | | | |

GRAPHIC SCALES:

0 1' 2' 4' 8' 12' 16'

3/16"=1'-0"

| REVISION NO. | DATE | REVISIONS | BY |
|---|---|---|---|
| | | | |

ATHER R. DAR
LICENSED PROFESSIONAL ENGINEER
No. 7808-S
HAWAII U.S.A.

Exp. Date: 4-30-20

THIS WORK WAS PREPARED BY ME OR UNDER MY SUPERVISION AND CONSTRUCTION OF THIS PROJECT WILL BE UNDER MY OBSERVATION

DEPARTMENT OF HAWAIIAN HOMELAND

# NANAKULI FLOOD CONTROL CHANNEL IMPROVEMENTS NANAKULI VALLEY, OAHU HAWAII

CHANNEL SEGMENT 014 REPAIR DETAILS

| | |
|---|---|
| DESIGNED BY: | TTP |
| DRAWN BY: | AK, AP, DL |
| CHECKED BY: | AD |
| SUPV: | |
| DATE: | 03/05/2019 |

HAWAII ENGINEERING GROUP, Inc.
Civil & Structural Engineers
1088 BISHOP STREET #2506
HONOLULU, HI 96813
Tel: 808-533-2092

JOB NO.

SHEET C014
21 OF 225 SHTS

FILE ___ DRAWER ___ ___ FOLDER ___ ___

Plot date: 15-Apr-2020

Full Size Plot

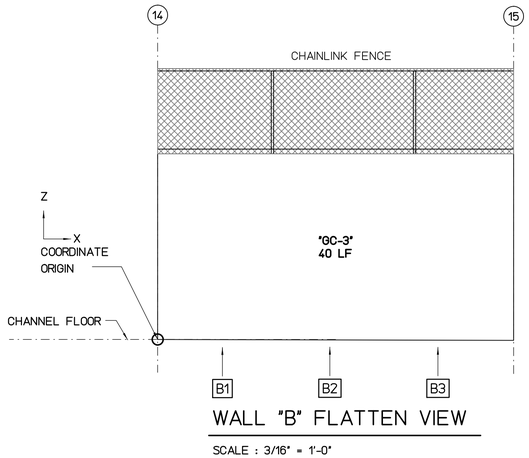


WALL "B" FLATTEN VIEW

SCALE : 3/16" = 1'-0"

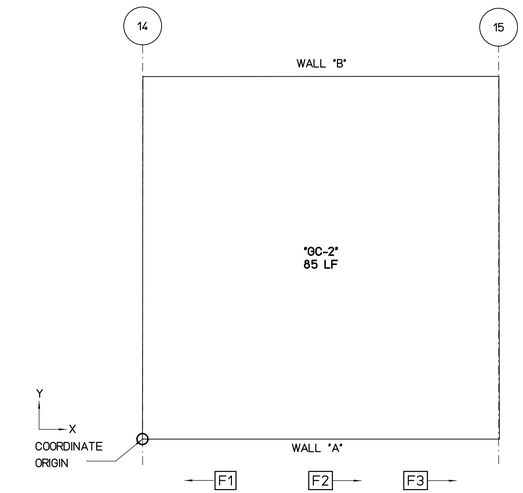


FLOOR PLAN VIEW

SCALE : 3/16" = 1'-0"

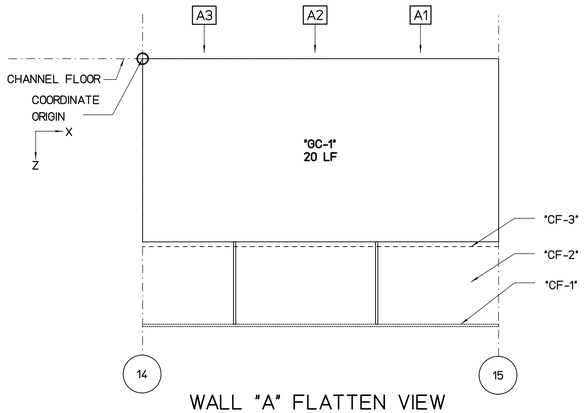


WALL "A" FLATTEN VIEW

SCALE : 3/16" = 1'-0"

REPAIR LEGEND AND NOTES:

- [2] CRACK AND SPALL REPAIR TYPES, SEE SHEETS SR201 AND SR202 FOR DETAILS. TYPE [*] INDICATES NO-REPAIR
- (A) CHAINLINK FENCE REPAIR TYPES, SEE SHEETS SF201 AND SF202 FOR DETAILS
- [1.0] TOP OF WALL LEANING DISTANCE TOWARD CHANNEL IN INCHES, SEE SHEETS SL101 TO SL207 FOR CONCRETE LINING

PHOTO LEGEND:

- [A1] WALL "A" ELEVATION PHOTO IDENTIFICATION SEE FLATTEN VIEW FOR PHOTO LOCATION
- [B1] WALL "B" ELEVATION PHOTO IDENTIFICATION SEE FLATTEN VIEW FOR PHOTO LOCATION
- [F1] CHANNEL FLOOR PHOTO IDENTIFICATION SEE FLOOR PLAN VIEW FOR PHOTO LOCATION

B1



B2



B3



F1



F2



F3



A1



A2



A3



SPALL REPAIR CHART

| MARK | LOCATION | REPAIR TYPE | SPALL DIMENSION | | | SPALL VOLUME | SPALL CENTER COORDINATE | | RATING |
|---|---|---|---|---|---|---|---|---|---|
| | | | L | W | D | | X | Y OR Z | |
| | | | | | | | | | |
| | | | | | | | | | |
| | | | | | | | | | |
| | | | | | | | | | |
| | | | | | | | | | |
| | | | | | | | | | |
| | | | | | | | | | |
| | | | | | | | | | |

CHAINLINK FENCE REPAIR CHART

| MARK | LOCATION | REPAIR TYPE | POSTS | TOP RAIL | BOTTOM WIRE | BRACE | FABRIC |
|---|---|---|---|---|---|---|---|
| "CF-1" | WALL "A" | (C) | - | MISSING 25' | - | - | - |
| "CF-2" | WALL "A" | (E) | - | - | - | - | MISSING 25'x6' |
| "CF-3" | WALL "A" | (D) | - | - | MISSING 25' | - | - |

NOT IN CONTRACT

CRACK REPAIR CHART

| MARK | LOCATION | REPAIR TYPE | GENERAL CRACKS (LF) | MAJOR CRACKS | | | | | | RATING |
|---|---|---|---|---|---|---|---|---|---|---|
| | | | | WIDTH (IN) | LENGTH (FT) | START PNT X | START PNT Y,Z | END PNT X | END PNT Y,Z | |
| "GC-1" | WALL "A" | [*] | 20 | - | - | - | - | - | - | 8 |
| "GC-2" | FLOOR | [*] | 85 | - | - | - | - | - | - | 8 |
| "GC-3" | WALL "B" | [*] | 40 | - | - | - | - | - | - | 8 |
| | | | | | | | | | | |
| | | | | | | | | | | |
| | | | | | | | | | | |
| | | | | | | | | | | |

GRAPHIC SCALES:

0 1' 2' 4' 8' 12' 16'

3/16"=1'-0"

| REVISION NO. | DATE | REVISIONS | BY |
|---|---|---|---|
| | | | |

ARTHER R. DAR
LICENSED PROFESSIONAL ENGINEER
No. 7808-S
HAWAII U.S.A.

Exp. Date: 4-30-20

THIS WORK WAS PREPARED BY ME OR UNDER MY SUPERVISION AND CONSTRUCTION OF THIS PROJECT WILL BE UNDER MY OBSERVATION

DEPARTMENT OF HAWAIIAN HOMELAND

NANAKULI FLOOD CONTROL
CHANNEL IMPROVEMENTS
NANAKULI VALLEY, OAHU HAWAII

CHANNEL SEGMENT [015] REPAIR DETAILS

| | |
|---|---|
| DESIGNED BY: | TTP |
| DRAWN BY: | AK, AP, DL |
| CHECKED BY: | AD |
| SUPV: | |
| DATE: | 03/05/2019 |

HAWAII ENGINEERING GROUP, Inc.
Civil & Structural Engineers
1088 BISHOP STREET #2506
HONOLULU, HI 96813
Tel: 808-533-2092

JOB NO.

SHEET C015

22 OF 225 SHTS

FILE ___ DRAWER ___ ___ FOLDER ___ ___

Plot date: 15-Apr-2020
Full Size Plot

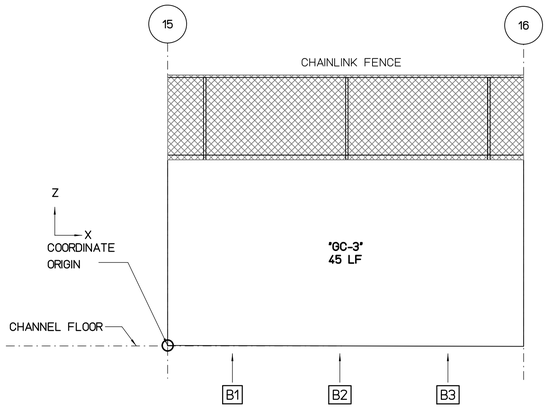


## WALL "B" FLATTEN VIEW

SCALE : 3/16" = 1'-0"

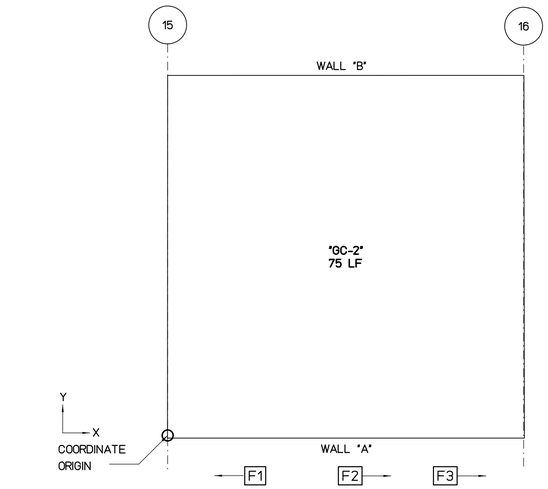


## FLOOR PLAN VIEW

SCALE : 3/16" = 1'-0"

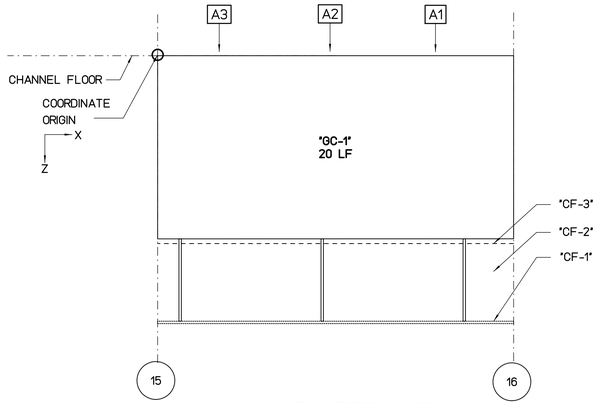


## WALL "A" FLATTEN VIEW

SCALE : 3/16" = 1'-0"

REPAIR LEGEND AND NOTES:

- 2 — CRACK AND SPALL REPAIR TYPES, SEE SHEETS SR201 AND SR202 FOR DETAILS. TYPE [*] INDICATES NO-REPAIR
- (A) — CHAINLINK FENCE REPAIR TYPES, SEE SHEETS SF201 AND SF202 FOR DETAILS
- 1.0 — TOP OF WALL LEANING DISTANCE TOWARD CHANNEL IN INCHES, SEE SHEETS SL101 TO SL207 FOR CONCRETE LINING

PHOTO LEGEND:

- A1 — WALL "A" ELEVATION PHOTO IDENTIFICATION SEE FLATTEN VIEW FOR PHOTO LOCATION
- B1 — WALL "B" ELEVATION PHOTO IDENTIFICATION SEE FLATTEN VIEW FOR PHOTO LOCATION
- F1 — CHANNEL FLOOR PHOTO IDENTIFICATION SEE FLOOR PLAN VIEW FOR PHOTO LOCATION

B1



B2



B3



F1

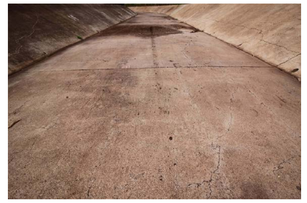

F2



F3



A1



A2



A3



### SPALL REPAIR CHART

| MARK | LOCATION | REPAIR TYPE | SPALL DIMENSION | | | SPALL VOLUME | SPALL CENTER COORDINATE | | RATING |
|---|---|---|---|---|---|---|---|---|---|
| | | | L | W | D | | X | Y OR Z | |
| | | | | | | | | | |
| | | | | | | | | | |
| | | | | | | | | | |
| | | | | | | | | | |
| | | | | | | | | | |
| | | | | | | | | | |
| | | | | | | | | | |
| | | | | | | | | | |

### CHAINLINK FENCE REPAIR CHART

| MARK | LOCATION | REPAIR TYPE | POSTS | TOP RAIL | BOTTOM WIRE | BRACE | FABRIC |
|---|---|---|---|---|---|---|---|
| "CF-1" | WALL "A" | (C) | - | MISSING 25' | - | - | - |
| "CF-2" | WALL "A" | (E) | - | - | - | - | MISSING 25'x6' |
| "CF-3" | WALL "A" | (D) | - | - | MISSING 25' | - | - |

NOT IN CONTRACT

### CRACK REPAIR CHART

| MARK | LOCATION | REPAIR TYPE | GENERAL CRACKS (LF) | MAJOR CRACKS | | | | | | RATING |
|---|---|---|---|---|---|---|---|---|---|---|
| | | | | WIDTH (IN) | LENGTH (FT) | START PNT X | START PNT Y,Z | END PNT X | END PNT Y,Z | |
| "GC-1" | WALL "A" | [*] | 20 | - | - | - | - | - | - | 8 |
| "GC-2" | FLOOR | [*] | 75 | - | - | - | - | - | - | 8 |
| "GC-3" | WALL "B" | [*] | 45 | - | - | - | - | - | - | 8 |
| | | | | | | | | | | |
| | | | | | | | | | | |
| | | | | | | | | | | |
| | | | | | | | | | | |

GRAPHIC SCALES:

0 1' 2' 4' 8' 12' 16'

3/16"=1'-0"

| REVISION NO. | DATE | REVISIONS | BY |
|---|---|---|---|
| | | | |

ATHER R. DAR
LICENSED PROFESSIONAL ENGINEER
No. 7808-S
HAWAII U.S.A.

Exp. Date: 4-30-20

THIS WORK WAS PREPARED BY ME OR UNDER MY SUPERVISION AND CONSTRUCTION OF THIS PROJECT WILL BE UNDER MY OBSERVATION

DEPARTMENT OF HAWAIIAN HOMELAND

# NANAKULI FLOOD CONTROL CHANNEL IMPROVEMENTS NANAKULI VALLEY, OAHU HAWAII

CHANNEL SEGMENT 016 REPAIR DETAILS

| | |
|---|---|
| DESIGNED BY: | TTP |
| DRAWN BY: | AK, AP, DL |
| CHECKED BY: | AD |
| SUPV: | |
| DATE: | 03/05/2019 |

HAWAII ENGINEERING GROUP, Inc.
Civil & Structural Engineers
1088 BISHOP STREET #2506
HONOLULU, HI 96813
Tel: 808-533-2092

JOB NO.

SHEET C016
23 OF 225 SHTS

FILE ___ DRAWER ___ ___ FOLDER ___ ___

Plot date: 15-Apr-2020
Full Size Plot

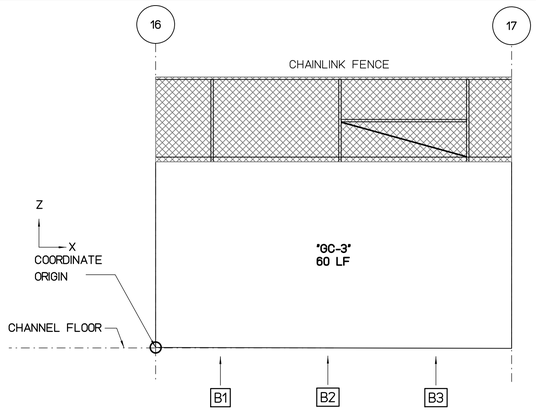


WALL "B" FLATTEN VIEW

SCALE : 3/16" = 1'-0"

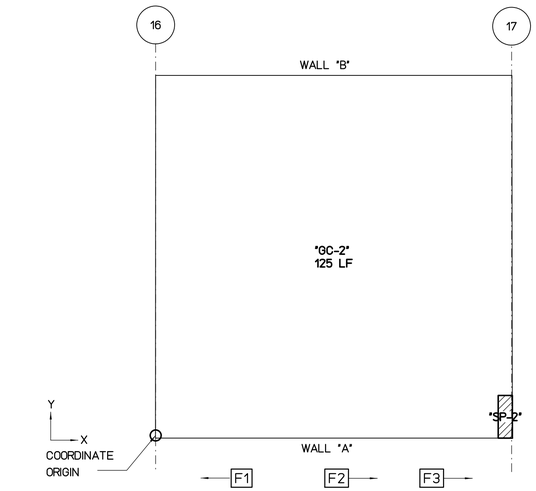


FLOOR PLAN VIEW

SCALE : 3/16" = 1'-0"

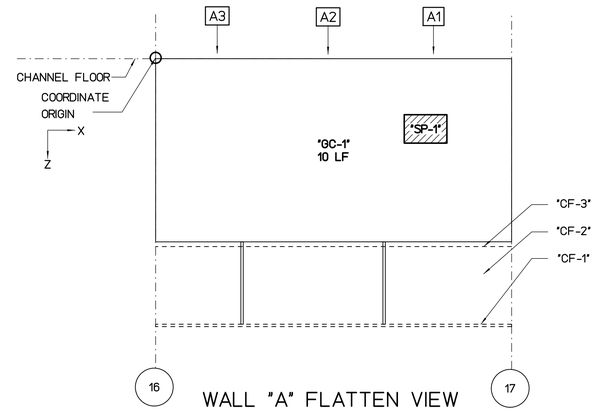


WALL "A" FLATTEN VIEW

SCALE : 3/16" = 1'-0"

REPAIR LEGEND AND NOTES:

- 2 — CRACK AND SPALL REPAIR TYPES, SEE SHEETS SR201 AND SR202 FOR DETAILS. TYPE [*] INDICATES NO-REPAIR
- (A) — CHAINLINK FENCE REPAIR TYPES, SEE SHEETS SF201 AND SF202 FOR DETAILS
- 1.0 — TOP OF WALL LEANING DISTANCE TOWARD CHANNEL IN INCHES, SEE SHEETS SL101 TO SL207 FOR CONCRETE LINING

PHOTO LEGEND:

- A1 — WALL "A" ELEVATION PHOTO IDENTIFICATION SEE FLATTEN VIEW FOR PHOTO LOCATION
- B1 — WALL "B" ELEVATION PHOTO IDENTIFICATION SEE FLATTEN VIEW FOR PHOTO LOCATION
- F1 — CHANNEL FLOOR PHOTO IDENTIFICATION SEE FLOOR PLAN VIEW FOR PHOTO LOCATION

B1



B2



B3



F1



F2



F3



A1



A2



A3



SPALL REPAIR CHART

| MARK | LOCATION | REPAIR TYPE | SPALL DIMENSION | | | SPALL VOLUME | SPALL CENTER COORDINATE | | RATING |
|---|---|---|---|---|---|---|---|---|---|
| | | | L | W | D | | X | Y OR Z | |
| "SP-1" | WALL "A" | 3 | 36 | 24 | 2 | 1728 | 19 | 5 | 7 |
| "SP-2" | FLOOR | 3 | 12 | 36 | 2 | 864 | 24.6 | 1.3 | 7 |

CHAINLINK FENCE REPAIR CHART

| MARK | LOCATION | REPAIR TYPE | POSTS | TOP RAIL | BOTTOM WIRE | BRACE | FABRIC |
|---|---|---|---|---|---|---|---|
| "CF-1" | WALL "A" | (C) | - | MISSING 25' | - | - | - |
| "CF-2" | WALL "A" | (E) | - | - | - | - | MISSING 25'x6' |
| "CF-3" | WALL "A" | (D) | - | - | MISSING 25' | - | - |

NOT IN CONTRACT

CRACK REPAIR CHART

| MARK | LOCATION | REPAIR TYPE | GENERAL CRACKS (LF) | MAJOR CRACKS | | | | | | RATING |
|---|---|---|---|---|---|---|---|---|---|---|
| | | | | WIDTH (IN) | LENGTH (FT) | START PNT X | START PNT Y,Z | END PNT X | END PNT Y,Z | |
| "GC-1" | WALL "A" | * | 10 | - | - | - | - | - | - | 8 |
| "GC-2" | FLOOR | * | 125 | - | - | - | - | - | - | 8 |
| "GC-3" | WALL "B" | * | 60 | - | - | - | - | - | - | 8 |

GRAPHIC SCALES:

0 1' 2' 4' 8' 12' 16'

3/16"=1'-0"

| REVISION NO. | DATE | REVISIONS | BY |
|---|---|---|---|
| | | | |

ARTHER R. DAR
LICENSED PROFESSIONAL ENGINEER
No. 7808-S
HAWAII U.S.A.

Exp. Date: 4-30-20

THIS WORK WAS PREPARED BY ME OR UNDER MY SUPERVISION AND CONSTRUCTION OF THIS PROJECT WILL BE UNDER MY OBSERVATION

DEPARTMENT OF HAWAIIAN HOMELAND

# NANAKULI FLOOD CONTROL CHANNEL IMPROVEMENTS NANAKULI VALLEY, OAHU HAWAII

CHANNEL SEGMENT 017 REPAIR DETAILS

| | |
|---|---|
| DESIGNED BY: | TTP |
| DRAWN BY: | AK, AP, DL |
| CHECKED BY: | AD |
| SUPV: | |
| DATE: | 03/05/2019 |

HAWAII ENGINEERING GROUP, Inc.
Civil & Structural Engineers
1088 BISHOP STREET #2506
HONOLULU, HI 96813
Tel: 808-533-2092

JOB NO.

SHEET C017
24 OF 225 SHTS

FILE ___ DRAWER ___ ___ FOLDER ___ ___

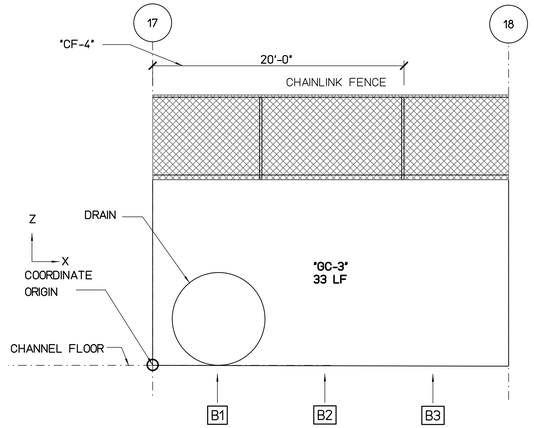


## WALL "B" FLATTEN VIEW

SCALE : 3/16" = 1'-0"

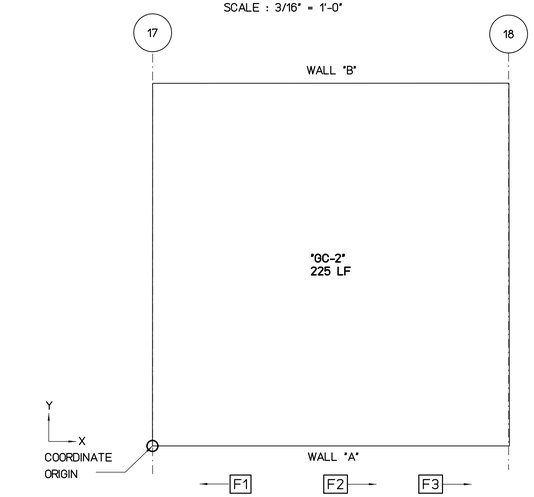


## FLOOR PLAN VIEW

SCALE : 3/16" = 1'-0"

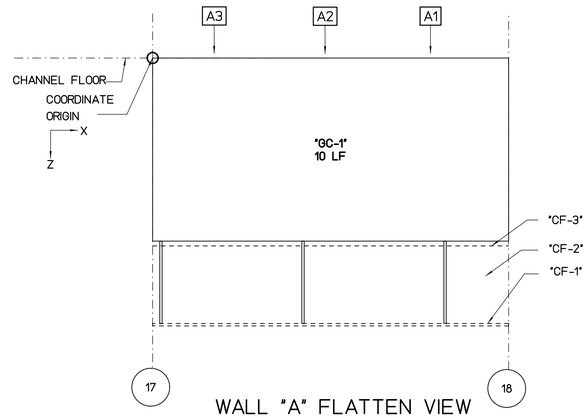


## WALL "A" FLATTEN VIEW

SCALE : 3/16" = 1'-0"

REPAIR LEGEND AND NOTES:

- 2 — CRACK AND SPALL REPAIR TYPES, SEE SHEETS SR201 AND SR202 FOR DETAILS. TYPE [*] INDICATES NO-REPAIR
- (A) — CHAINLINK FENCE REPAIR TYPES, SEE SHEETS SF201 AND SF202 FOR DETAILS
- 1.0 — TOP OF WALL LEANING DISTANCE TOWARD CHANNEL IN INCHES, SEE SHEETS SL101 TO SL207 FOR CONCRETE LINING

PHOTO LEGEND:

- A1 — WALL "A" ELEVATION PHOTO IDENTIFICATION SEE FLATTEN VIEW FOR PHOTO LOCATION
- B1 — WALL "B" ELEVATION PHOTO IDENTIFICATION SEE FLATTEN VIEW FOR PHOTO LOCATION
- F1 — CHANNEL FLOOR PHOTO IDENTIFICATION SEE FLOOR PLAN VIEW FOR PHOTO LOCATION

B1



B2



B3



F1



F2



F3



A1



A2



A3



### SPALL REPAIR CHART

| MARK | LOCATION | REPAIR TYPE | SPALL DIMENSION | | | SPALL VOLUME | SPALL CENTER COORDINATE | | RATING |
|---|---|---|---|---|---|---|---|---|---|
| | | | L | W | D | | X | Y OR Z | |
| | | | | | | | | | |
| | | | | | | | | | |
| | | | | | | | | | |
| | | | | | | | | | |
| | | | | | | | | | |
| | | | | | | | | | |
| | | | | | | | | | |
| | | | | | | | | | |

### CHAINLINK FENCE REPAIR CHART

| MARK | LOCATION | REPAIR TYPE | POSTS | TOP RAIL | BOTTOM WIRE | BRACE | FABRIC |
|---|---|---|---|---|---|---|---|
| "CF-1" | WALL "A" | (C) | - | MISSING 25' | - | - | - |
| "CF-2" | WALL "A" | (E) | - | - | - | - | MISSING 25'x6' |
| "CF-3" | WALL "A" | (D) | | - | MISSING 25' | - | - |
| "CF-4" | WALL "B" | (B) | | | | - | DAMAGED 20'x6' |

NOT IN CONTRACT

### CRACK REPAIR CHART

| MARK | LOCATION | REPAIR TYPE | GENERAL CRACKS (LF) | MAJOR CRACKS | | | | | | RATING |
|---|---|---|---|---|---|---|---|---|---|---|
| | | | | WIDTH (IN) | LENGTH (FT) | START PNT X | START PNT Y,Z | END PNT X | END PNT Y,Z | |
| "GC-1" | WALL "A" | [*] | 10 | - | - | - | - | - | - | 8 |
| "GC-2" | FLOOR | [*] | 225 | - | - | - | - | - | - | 8 |
| "GC-3" | WALL "B" | [*] | 33 | - | - | - | - | - | - | 8 |
| | | | | | | | | | | |
| | | | | | | | | | | |
| | | | | | | | | | | |
| | | | | | | | | | | |

GRAPHIC SCALES:

0 1' 2' 4' 8' 12' 16'

3/16"=1'-0"

| REVISION NO. | DATE | REVISIONS | BY |
|---|---|---|---|
| | | | |

ATHER R. DAR
LICENSED PROFESSIONAL ENGINEER
No. 7808-S
HAWAII U.S.A.

Exp. Date: 4-30-20

THIS WORK WAS PREPARED BY ME OR UNDER MY SUPERVISION AND CONSTRUCTION OF THIS PROJECT WILL BE UNDER MY OBSERVATION

DEPARTMENT OF HAWAIIAN HOMELAND

# NANAKULI FLOOD CONTROL CHANNEL IMPROVEMENTS NANAKULI VALLEY, OAHU HAWAII

CHANNEL SEGMENT 018 REPAIR DETAILS

| | |
|---|---|
| DESIGNED BY: | TTP |
| DRAWN BY: | AK, AP, DL |
| CHECKED BY: | AD |
| SUPV: | |
| DATE: | 03/05/2019 |


HAWAII ENGINEERING GROUP, Inc.
Civil & Structural Engineers
1088 BISHOP STREET #2506
HONOLULU, HI 96813
Tel: 808-533-2092


JOB NO.

SHEET C018

25 OF 225 SHTS

FILE ___ DRAWER ___ ___ FOLDER ___ ___

Plot date: 15-Apr-2020

Full Size Plot

Plot date: 15-Apr-2020
Full Size Plot

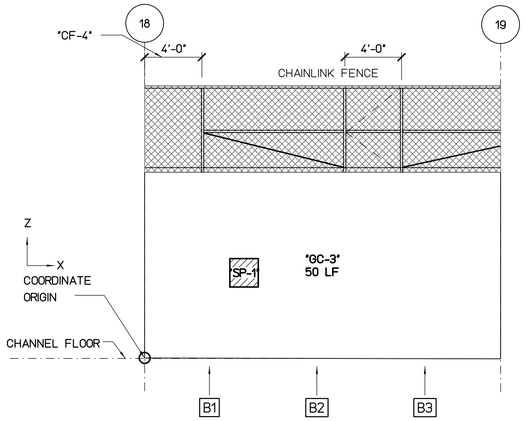


## WALL "B" FLATTEN VIEW

SCALE : 3/16" = 1'-0"

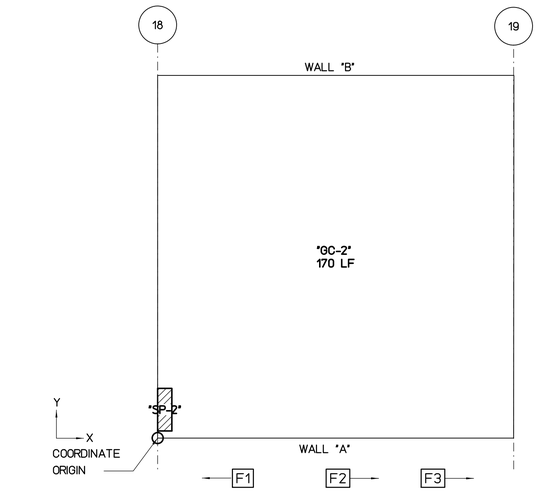


## FLOOR PLAN VIEW

SCALE : 3/16" = 1'-0"

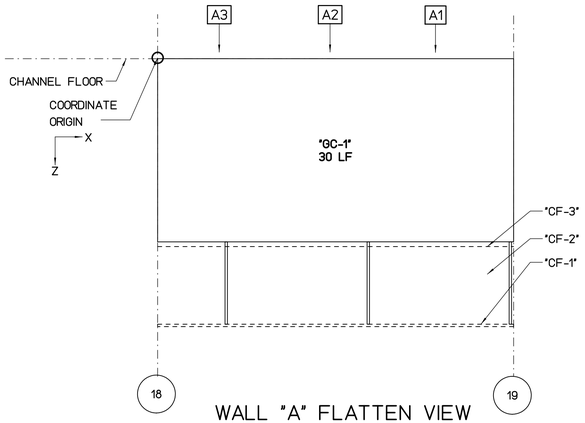


## WALL "A" FLATTEN VIEW

SCALE : 3/16" = 1'-0"

**REPAIR LEGEND AND NOTES:**

- 2 — CRACK AND SPALL REPAIR TYPES, SEE SHEETS SR201 AND SR202 FOR DETAILS. TYPE [*] INDICATES NO-REPAIR
- (A) — CHAINLINK FENCE REPAIR TYPES, SEE SHEETS SF201 AND SF202 FOR DETAILS
- 1.0 — TOP OF WALL LEANING DISTANCE TOWARD CHANNEL IN INCHES, SEE SHEETS SL101 TO SL207 FOR CONCRETE LINING

**PHOTO LEGEND:**

- A1 — WALL "A" ELEVATION PHOTO IDENTIFICATION SEE FLATTEN VIEW FOR PHOTO LOCATION
- B1 — WALL "B" ELEVATION PHOTO IDENTIFICATION SEE FLATTEN VIEW FOR PHOTO LOCATION
- F1 — CHANNEL FLOOR PHOTO IDENTIFICATION SEE FLOOR PLAN VIEW FOR PHOTO LOCATION

B1



B2



B3



F1



F2



F3



A1



A2



A3



### SPALL REPAIR CHART

| MARK | LOCATION | REPAIR TYPE | SPALL DIMENSION L | SPALL DIMENSION W | SPALL DIMENSION D | SPALL VOLUME | SPALL CENTER COORDINATE X | SPALL CENTER COORDINATE Y OR Z | RATING |
|---|---|---|---|---|---|---|---|---|---|
| "SP-1" | WALL "B" | 3 | 24 | 24 | 2 | 1152 | 7 | 6 | 7 |
| "SP-2" | FLOOR | 3 | 12 | 36 | 2 | 864 | 0.5 | 2 | 7 |

### CHAINLINK FENCE REPAIR CHART

| MARK | LOCATION | REPAIR TYPE | POSTS | TOP RAIL | BOTTOM WIRE | BRACE | FABRIC |
|---|---|---|---|---|---|---|---|
| "CF-1" | WALL "A" | C | - | MISSING 25' | - | - | - |
| "CF-2" | WALL "A" | E | - | - | - | - | MISSING 25'x6' |
| "CF-3" | WALL "A" | D | | - | MISSING 25' | - | - |
| "CF-4" | WALL "B" | B | | | | - | DAMAGED 4'x6' |

NOT IN CONTRACT

### CRACK REPAIR CHART

| MARK | LOCATION | REPAIR TYPE | GENERAL CRACKS (LF) | MAJOR CRACKS WIDTH (IN) | MAJOR CRACKS LENGTH (FT) | MAJOR CRACKS START PNT X | MAJOR CRACKS START PNT Y,Z | MAJOR CRACKS END PNT X | MAJOR CRACKS END PNT Y,Z | RATING |
|---|---|---|---|---|---|---|---|---|---|---|
| "GC-1" | WALL "A" | * | 30 | - | - | - | - | - | - | 8 |
| "GC-2" | FLOOR | * | 170 | - | - | - | - | - | - | 8 |
| "GC-3" | WALL "B" | * | 50 | - | - | - | - | - | - | 8 |

GRAPHIC SCALES:

0 1' 2' 4' 8' 12' 16'

3/16"=1'-0"

| REVISION NO. | DATE | REVISIONS | BY |
|---|---|---|---|
| | | | |

ATHER R. DAR
LICENSED PROFESSIONAL ENGINEER
No. 7808-S
HAWAII U.S.A.

Exp. Date: 4-30-20

THIS WORK WAS PREPARED BY ME OR UNDER MY SUPERVISION AND CONSTRUCTION OF THIS PROJECT WILL BE UNDER MY OBSERVATION

DEPARTMENT OF HAWAIIAN HOMELAND

# NANAKULI FLOOD CONTROL CHANNEL IMPROVEMENTS NANAKULI VALLEY, OAHU HAWAII

CHANNEL SEGMENT 019 REPAIR DETAILS

| | |
|---|---|
| DESIGNED BY: | TTP |
| DRAWN BY: | AK, AP, DL |
| CHECKED BY: | AD |
| SUPV: | |
| DATE: | 03/05/2019 |

HAWAII ENGINEERING GROUP, Inc.
Civil & Structural Engineers
1088 BISHOP STREET #2506
HONOLULU, HI 96813
Tel: 808-533-2092

JOB NO.

SHEET C019
26 OF 225 SHTS

FILE ___ DRAWER ___ ___ FOLDER ___ ___

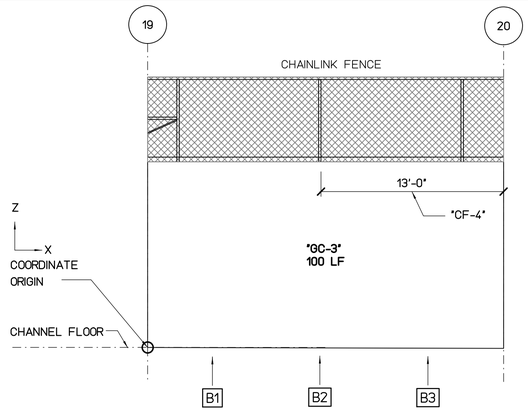


## WALL "B" FLATTEN VIEW

SCALE : 3/16" = 1'-0"

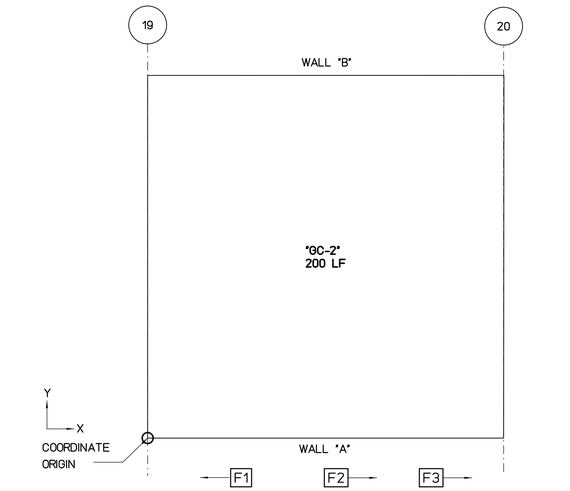


## FLOOR PLAN VIEW

SCALE : 3/16" = 1'-0"

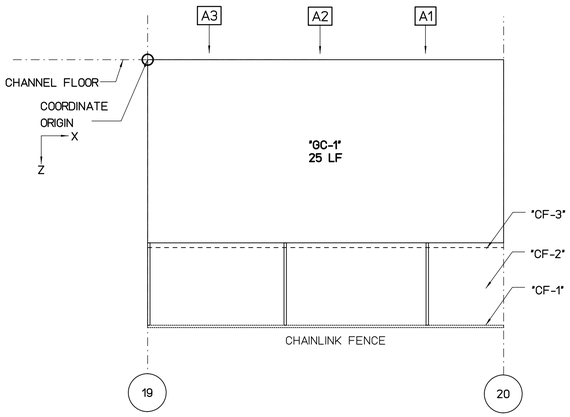


## WALL "A" FLATTEN VIEW

SCALE : 3/16" = 1'-0"

REPAIR LEGEND AND NOTES:

- 2 — CRACK AND SPALL REPAIR TYPES, SEE SHEETS SR201 AND SR202 FOR DETAILS. TYPE [*] INDICATES NO-REPAIR
- (A) — CHAINLINK FENCE REPAIR TYPES, SEE SHEETS SF201 AND SF202 FOR DETAILS
- 1.0 — TOP OF WALL LEANING DISTANCE TOWARD CHANNEL IN INCHES, SEE SHEETS SL101 TO SL207 FOR CONCRETE LINING

PHOTO LEGEND:

- A1 — WALL "A" ELEVATION PHOTO IDENTIFICATION SEE FLATTEN VIEW FOR PHOTO LOCATION
- B1 — WALL "B" ELEVATION PHOTO IDENTIFICATION SEE FLATTEN VIEW FOR PHOTO LOCATION
- F1 — CHANNEL FLOOR PHOTO IDENTIFICATION SEE FLOOR PLAN VIEW FOR PHOTO LOCATION

B1



B2



B3



F1



F2



F3



A1



A2



A3



### SPALL REPAIR CHART

| MARK | LOCATION | REPAIR TYPE | SPALL DIMENSION | | | SPALL VOLUME | SPALL CENTER COORDINATE | | RATING |
|---|---|---|---|---|---|---|---|---|---|
| | | | L | W | D | | X | Y OR Z | |
| | | | | | | | | | |
| | | | | | | | | | |
| | | | | | | | | | |
| | | | | | | | | | |
| | | | | | | | | | |
| | | | | | | | | | |
| | | | | | | | | | |
| | | | | | | | | | |

### CHAINLINK FENCE REPAIR CHART

| MARK | LOCATION | REPAIR TYPE | POSTS | TOP RAIL | BOTTOM WIRE | BRACE | FABRIC |
|---|---|---|---|---|---|---|---|
| "CF-1" | WALL "A" | (C) | - | MISSING 25' | - | - | - |
| "CF-2" | WALL "A" | (E) | - | - | - | - | MISSING 25'x6' |
| "CF-3" | WALL "A" | (D) | | - | MISSING 25' | - | - |
| "CF-4" | WALL "B" | (B) | | | | - | DAMAGED 13'x6' |
| | | | | | | | |
| | | | | | | | |
| | | | | | | | |
| | | | | | | | |
| | | | | | | | |

NOT IN CONTRACT

### CRACK REPAIR CHART

| MARK | LOCATION | REPAIR TYPE | GENERAL CRACKS (LF) | MAJOR CRACKS | | | | | | RATING |
|---|---|---|---|---|---|---|---|---|---|---|
| | | | | WIDTH (IN) | LENGTH (FT) | START PNT X | START PNT Y,Z | END PNT X | END PNT Y,Z | |
| "GC-1" | WALL "A" | [*] | 25 | - | - | - | - | - | - | 8 |
| "GC-2" | FLOOR | [*] | 200 | - | - | - | - | - | - | 8 |
| "GC-3" | WALL "B" | [*] | 100 | - | - | - | - | - | - | 8 |
| | | | | | | | | | | |
| | | | | | | | | | | |
| | | | | | | | | | | |
| | | | | | | | | | | |

GRAPHIC SCALES:

0 1' 2' 4' 8' 12' 16'

3/16"=1'-0"

| REVISION NO. | DATE | REVISIONS | BY |
|---|---|---|---|
| | | | |

ATHER R. DAR
LICENSED PROFESSIONAL ENGINEER
No. 7808-S
HAWAII U.S.A.

Exp. Date: 4-30-20

THIS WORK WAS PREPARED BY ME OR UNDER MY SUPERVISION AND CONSTRUCTION OF THIS PROJECT WILL BE UNDER MY OBSERVATION

DEPARTMENT OF HAWAIIAN HOMELAND

# NANAKULI FLOOD CONTROL CHANNEL IMPROVEMENTS NANAKULI VALLEY, OAHU HAWAII

## CHANNEL SEGMENT 020 REPAIR DETAILS

| | |
|---|---|
| DESIGNED BY: | TTP |
| DRAWN BY: | AK, AP, DL |
| CHECKED BY: | AD |
| SUPV: | |
| DATE: | 03/05/2019 |


HAWAII ENGINEERING GROUP, Inc.
Civil & Structural Engineers
1088 BISHOP STREET #2506
HONOLULU, HI 96813
Tel: 808-533-2092


JOB NO.

SHEET C020
27 OF 225 SHTS

FILE ___ DRAWER ___ ___ FOLDER ___ ___

Plot date: 15-Apr-2020

Full Size Plot

Plot date: 15-Apr-2020
Full Size Plot

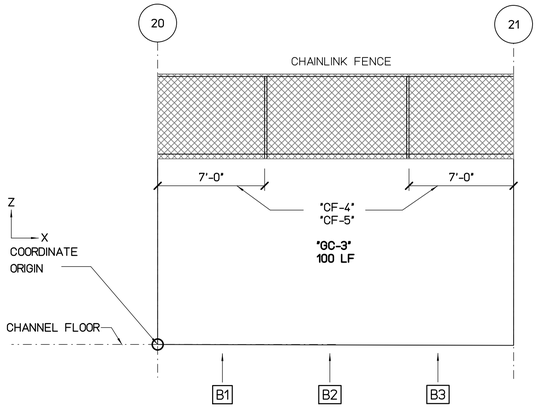


## WALL "B" FLATTEN VIEW

SCALE : 3/16" = 1'-0"

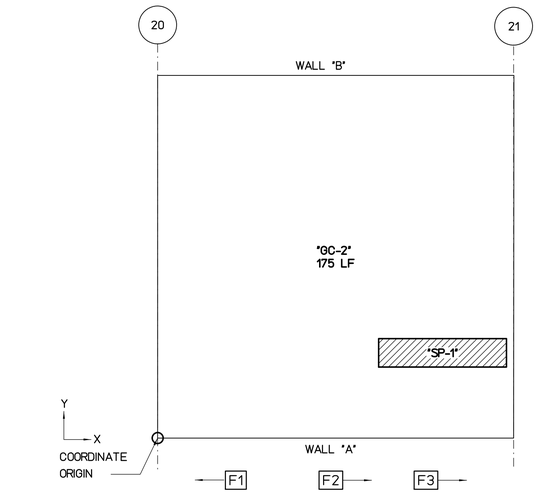


## FLOOR PLAN VIEW

SCALE : 3/16" = 1'-0"

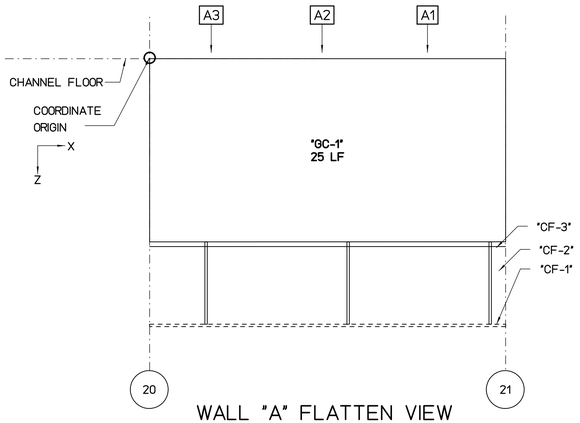


## WALL "A" FLATTEN VIEW

SCALE : 3/16" = 1'-0"

REPAIR LEGEND AND NOTES:

- 2 — CRACK AND SPALL REPAIR TYPES, SEE SHEETS SR201 AND SR202 FOR DETAILS. TYPE [*] INDICATES NO-REPAIR
- (A) — CHAINLINK FENCE REPAIR TYPES, SEE SHEETS SF201 AND SF202 FOR DETAILS
- 1.0 — TOP OF WALL LEANING DISTANCE TOWARD CHANNEL IN INCHES, SEE SHEETS SL101 TO SL207 FOR CONCRETE LINING

PHOTO LEGEND:

- A1 — WALL "A" ELEVATION PHOTO IDENTIFICATION SEE FLATTEN VIEW FOR PHOTO LOCATION
- B1 — WALL "B" ELEVATION PHOTO IDENTIFICATION SEE FLATTEN VIEW FOR PHOTO LOCATION
- F1 — CHANNEL FLOOR PHOTO IDENTIFICATION SEE FLOOR PLAN VIEW FOR PHOTO LOCATION

B1



B2



B3



F1



F2



F3



A1



A2



A3



### SPALL REPAIR CHART

| MARK | LOCATION | REPAIR TYPE | SPALL DIMENSION L | SPALL DIMENSION W | SPALL DIMENSION D | SPALL VOLUME | SPALL CENTER COORDINATE X | SPALL CENTER COORDINATE Y OR Z | RATING |
|---|---|---|---|---|---|---|---|---|---|
| "SP-1" | FLOOR | 3 | 108 | 24 | 3 | 7776 | 20.1 | 6 | 6 |

### CHAINLINK FENCE REPAIR CHART

| MARK | LOCATION | REPAIR TYPE | POSTS | TOP RAIL | BOTTOM WIRE | BRACE | FABRIC |
|---|---|---|---|---|---|---|---|
| "CF-1" | WALL "A" | C | - | MISSING 25' | - | - | - |
| "CF-2" | WALL "A" | E | - | - | - | - | MISSING 25'x6' |
| "CF-3" | WALL "A" | D | | - | DAMAGED 25' | - | - |
| "CF-4" | WALL "B" | G | | | | - | DAMAGED 14'x6' |
| "CF-5" | WALL "B" | G | | | DAMAGED 14' | - | - |

NOT IN CONTRACT

### CRACK REPAIR CHART

| MARK | LOCATION | REPAIR TYPE | GENERAL CRACKS (LF) | MAJOR CRACKS WIDTH (IN) | MAJOR CRACKS LENGTH (FT) | MAJOR CRACKS START PNT X | MAJOR CRACKS START PNT Y,Z | MAJOR CRACKS END PNT X | MAJOR CRACKS END PNT Y,Z | RATING |
|---|---|---|---|---|---|---|---|---|---|---|
| "GC-1" | WALL "A" | * | 25 | - | - | - | - | - | - | 8 |
| "GC-2" | FLOOR | * | 175 | - | - | - | - | - | - | 8 |
| "GC-3" | WALL "B" | * | 100 | - | - | - | - | - | - | 8 |

GRAPHIC SCALES:

0 1' 2' 4' 8' 12' 16'

3/16"=1'-0"

| REVISION NO. | DATE | REVISIONS | BY |
|---|---|---|---|
| | | | |

ARTHER R. DAR
LICENSED PROFESSIONAL ENGINEER
No. 7808-S
HAWAII U.S.A.
Exp. Date: 4-30-20

THIS WORK WAS PREPARED BY ME OR UNDER MY SUPERVISION AND CONSTRUCTION OF THIS PROJECT WILL BE UNDER MY OBSERVATION

DEPARTMENT OF HAWAIIAN HOMELAND

# NANAKULI FLOOD CONTROL CHANNEL IMPROVEMENTS NANAKULI VALLEY, OAHU HAWAII

CHANNEL SEGMENT 021 REPAIR DETAILS

| | |
|---|---|
| DESIGNED BY: | TTP |
| DRAWN BY: | AK, AP, DL |
| CHECKED BY: | AD |
| SUPV: | |
| DATE: | 03/05/2019 |

HAWAII ENGINEERING GROUP, Inc.
Civil & Structural Engineers
1088 BISHOP STREET #2506
HONOLULU, HI 96813
Tel: 808-533-2092

JOB NO.

SHEET C021
28 OF 225 SHTS

FILE ___ DRAWER ___ ___ FOLDER ___ ___

Plot date: 15-Apr-2020
Full Size Plot

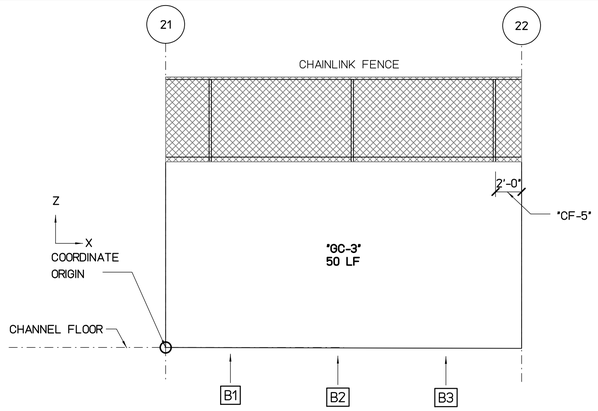


## WALL "B" FLATTEN VIEW

SCALE : 3/16" = 1'-0"

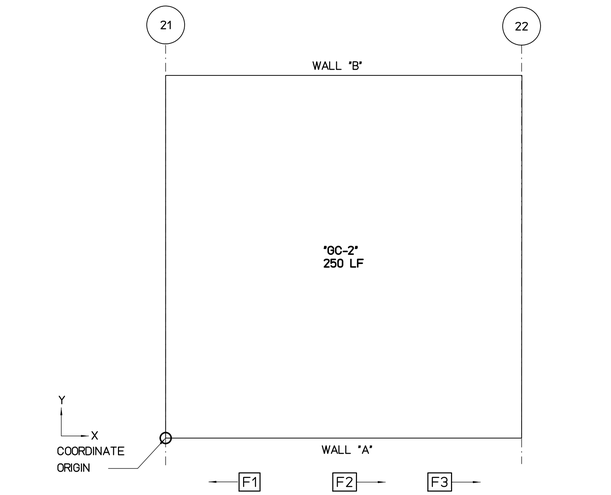


## FLOOR PLAN VIEW

SCALE : 3/16" = 1'-0"

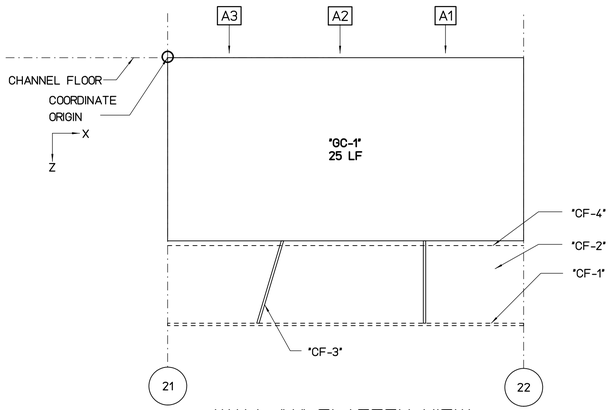


## WALL "A" FLATTEN VIEW

SCALE : 3/16" = 1'-0"

REPAIR LEGEND AND NOTES:

- 2 — CRACK AND SPALL REPAIR TYPES, SEE SHEETS SR201 AND SR202 FOR DETAILS. TYPE [*] INDICATES NO-REPAIR
- (A) — CHAINLINK FENCE REPAIR TYPES, SEE SHEETS SF201 AND SF202 FOR DETAILS
- 1.0 — TOP OF WALL LEANING DISTANCE TOWARD CHANNEL IN INCHES, SEE SHEETS SL101 TO SL207 FOR CONCRETE LINING

PHOTO LEGEND:

- A1 — WALL "A" ELEVATION PHOTO IDENTIFICATION SEE FLATTEN VIEW FOR PHOTO LOCATION
- B1 — WALL "B" ELEVATION PHOTO IDENTIFICATION SEE FLATTEN VIEW FOR PHOTO LOCATION
- F1 — CHANNEL FLOOR PHOTO IDENTIFICATION SEE FLOOR PLAN VIEW FOR PHOTO LOCATION

B1



B2



B3



F1



F2



F3



A1



A2



A3



### SPALL REPAIR CHART

| MARK | LOCATION | REPAIR TYPE | SPALL DIMENSION L | SPALL DIMENSION W | SPALL DIMENSION D | SPALL VOLUME | SPALL CENTER COORDINATE X | SPALL CENTER COORDINATE Y OR Z | RATING |
|---|---|---|---|---|---|---|---|---|---|
| | | | | | | | | | |
| | | | | | | | | | |
| | | | | | | | | | |
| | | | | | | | | | |
| | | | | | | | | | |
| | | | | | | | | | |
| | | | | | | | | | |
| | | | | | | | | | |

### CHAINLINK FENCE REPAIR CHART

| MARK | LOCATION | REPAIR TYPE | POSTS | TOP RAIL | BOTTOM WIRE | BRACE | FABRIC |
|---|---|---|---|---|---|---|---|
| "CF-1" | WALL "A" | (C) | - | MISSING 25' | - | - | - |
| "CF-2" | WALL "A" | (E) | - | - | - | - | MISSING 25'x6' |
| "CF-3" | WALL "A" | (A) | BENT 1 | - | - | - | - |
| "CF-4" | WALL "A" | (D) | - | MISSING 25' | - | - | - |
| "CF-5" | WALL "B" | (B) | - | - | - | - | DAMAGED 2'x6' |
| | | | | | | | |
| | | | | | | | |
| | | | | | | | |
| | | | | | | | |
| | | | | | | | |

NOT IN CONTRACT

### CRACK REPAIR CHART

| MARK | LOCATION | REPAIR TYPE | GENERAL CRACKS (LF) | MAJOR CRACKS WIDTH (IN) | MAJOR CRACKS LENGTH (FT) | MAJOR CRACKS START PNT X | MAJOR CRACKS START PNT Y,Z | MAJOR CRACKS END PNT X | MAJOR CRACKS END PNT Y,Z | RATING |
|---|---|---|---|---|---|---|---|---|---|---|
| "GC-1" | WALL "A" | [*] | 25 | - | - | - | - | - | - | 8 |
| "GC-2" | FLOOR | [*] | 250 | - | - | - | - | - | - | 8 |
| "GC-3" | WALL "B" | [*] | 50 | - | - | - | - | - | - | 8 |
| | | | | | | | | | | |
| | | | | | | | | | | |
| | | | | | | | | | | |
| | | | | | | | | | | |

GRAPHIC SCALES:

0 1' 2' 4' 8' 12' 16'

3/16"=1'-0"

| REVISION NO. | DATE | REVISIONS | BY |
|---|---|---|---|
| | | | |

ATHER R. DAR
LICENSED PROFESSIONAL ENGINEER
No. 7808-S
HAWAII U.S.A.

Exp. Date: 4-30-20

THIS WORK WAS PREPARED BY ME OR UNDER MY SUPERVISION AND CONSTRUCTION OF THIS PROJECT WILL BE UNDER MY OBSERVATION

DEPARTMENT OF HAWAIIAN HOMELAND

# NANAKULI FLOOD CONTROL CHANNEL IMPROVEMENTS NANAKULI VALLEY, OAHU HAWAII

CHANNEL SEGMENT 022 REPAIR DETAILS

| | |
|---|---|
| DESIGNED BY: | TTP |
| DRAWN BY: | AK, AP, DL |
| CHECKED BY: | AD |
| SUPV: | |
| DATE: | 03/05/2019 |

HAWAII ENGINEERING GROUP, Inc.
Civil & Structural Engineers
1088 BISHOP STREET #2506
HONOLULU, HI 96813
Tel: 808-533-2092

JOB NO.

SHEET C022
29 OF 225 SHTS

FILE ___ DRAWER ___ ___ FOLDER ___ ___

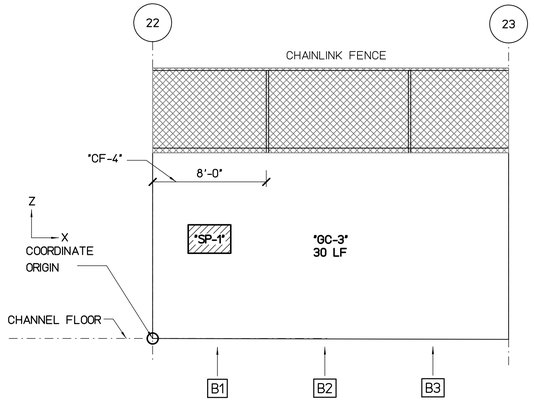


## WALL "B" FLATTEN VIEW

SCALE : 3/16" = 1'-0"

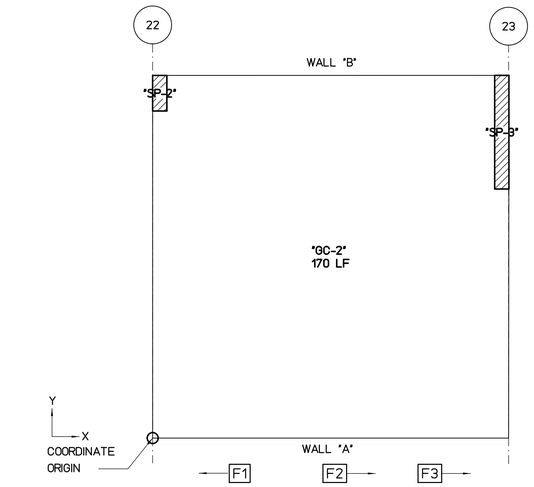


## FLOOR PLAN VIEW

SCALE : 3/16" = 1'-0"

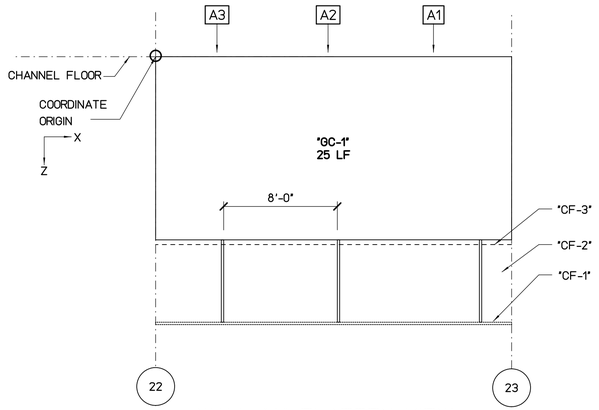


## WALL "A" FLATTEN VIEW

SCALE : 3/16" = 1'-0"

REPAIR LEGEND AND NOTES:

- 2 — CRACK AND SPALL REPAIR TYPES, SEE SHEETS SR201 AND SR202 FOR DETAILS. TYPE [*] INDICATES NO-REPAIR
- (A) — CHAINLINK FENCE REPAIR TYPES, SEE SHEETS SF201 AND SF202 FOR DETAILS
- 1.0 — TOP OF WALL LEANING DISTANCE TOWARD CHANNEL IN INCHES, SEE SHEETS SL101 TO SL207 FOR CONCRETE LINING

PHOTO LEGEND:

- A1 — WALL "A" ELEVATION PHOTO IDENTIFICATION SEE FLATTEN VIEW FOR PHOTO LOCATION
- B1 — WALL "B" ELEVATION PHOTO IDENTIFICATION SEE FLATTEN VIEW FOR PHOTO LOCATION
- F1 — CHANNEL FLOOR PHOTO IDENTIFICATION SEE FLOOR PLAN VIEW FOR PHOTO LOCATION

B1



B2



B3



F1



F2



F3



A1



A2



A3



### SPALL REPAIR CHART

| MARK | LOCATION | REPAIR TYPE | SPALL DIMENSION L | SPALL DIMENSION W | SPALL DIMENSION D | SPALL VOLUME | SPALL CENTER COORDINATE X | SPALL CENTER COORDINATE Y OR Z | RATING |
|---|---|---|---|---|---|---|---|---|---|
| "SP-1" | WALL "B" | 3 | 36 | 24 | 2 | 1728 | 4 | 7 | 7 |
| "SP-2" | FLOOR | 3 | 12 | 30 | 2 | 720 | 0.5 | 24.3 | 7 |
| "SP-3" | FLOOR | 3 | 12 | 96 | 2 | 2304 | 24.6 | 21.5 | 7 |

### CHAINLINK FENCE REPAIR CHART

| MARK | LOCATION | REPAIR TYPE | POSTS | TOP RAIL | BOTTOM WIRE | BRACE | FABRIC |
|---|---|---|---|---|---|---|---|
| "CF-1" | WALL "A" | C | - | MISSING 25' | - | - | - |
| "CF-2" | WALL "A" | E | - | - | - | - | MISSING 25'x6' |
| "CF-3" | WALL "A" | D | - | - | MISSING 25' | - | - |
| "CF-4" | WALL "B" | G | - | - | - | - | DAMAGED 8'x6' |

NOT IN CONTRACT

### CRACK REPAIR CHART

| MARK | LOCATION | REPAIR TYPE | GENERAL CRACKS (LF) | MAJOR CRACKS WIDTH (IN) | MAJOR CRACKS LENGTH (FT) | MAJOR CRACKS START PNT X | MAJOR CRACKS START PNT Y,Z | MAJOR CRACKS END PNT X | MAJOR CRACKS END PNT Y,Z | RATING |
|---|---|---|---|---|---|---|---|---|---|---|
| "GC-1" | WALL "A" | * | 25 | - | - | - | - | - | - | 8 |
| "GC-2" | FLOOR | * | 170 | - | - | - | - | - | - | 8 |
| "GC-3" | WALL "B" | * | 30 | - | - | - | - | - | - | 8 |

GRAPHIC SCALES:

0 1' 2' 4' 8' 12' 16'

3/16"=1'-0"

| REVISION NO. | DATE | REVISIONS | BY |
|---|---|---|---|
| | | | |

ATHER R. DAR
LICENSED PROFESSIONAL ENGINEER
No. 7808-S
HAWAII U.S.A.

Exp. Date: 4-30-20

THIS WORK WAS PREPARED BY ME OR UNDER MY SUPERVISION AND CONSTRUCTION OF THIS PROJECT WILL BE UNDER MY OBSERVATION

DEPARTMENT OF HAWAIIAN HOMELAND

NANAKULI FLOOD CONTROL
CHANNEL IMPROVEMENTS
NANAKULI VALLEY, OAHU HAWAII

CHANNEL SEGMENT 023 REPAIR DETAILS

| | |
|---|---|
| DESIGNED BY: | TTP |
| DRAWN BY: | AK, AP, DL |
| CHECKED BY: | AD |
| SUPV: | |
| DATE: | 03/05/2019 |

HAWAII ENGINEERING GROUP, Inc.
Civil & Structural Engineers
1088 BISHOP STREET #2506
HONOLULU, HI 96813
Tel: 808-533-2092

JOB NO.

SHEET C023
30 OF 225 SHTS

FILE ___ DRAWER ___ ___ FOLDER ___ ___

Plot date: 15-Apr-2020

Full Size Plot

Plot date: 15-Apr-2020
Full Size Plot

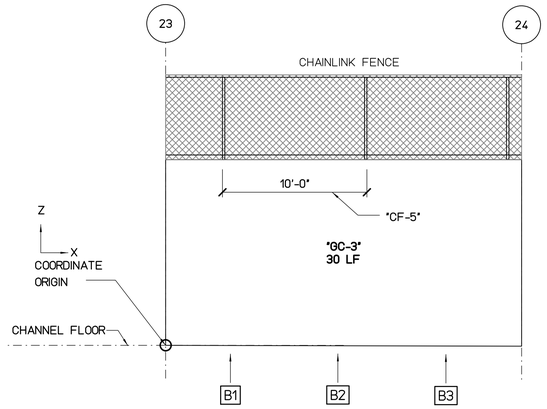


## WALL "B" FLATTEN VIEW

SCALE : 3/16" = 1'-0"

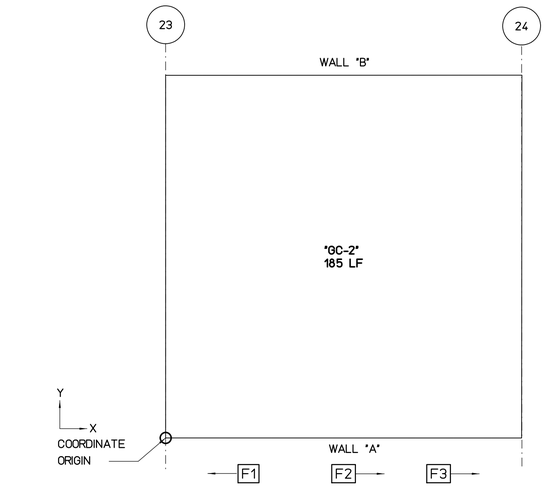


## FLOOR PLAN VIEW

SCALE : 3/16" = 1'-0"

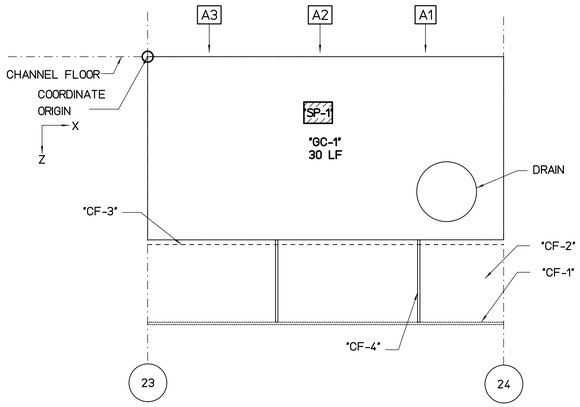


## WALL "A" FLATTEN VIEW

SCALE : 3/16" = 1'-0"

REPAIR LEGEND AND NOTES:

- 2 — CRACK AND SPALL REPAIR TYPES, SEE SHEETS SR201 AND SR202 FOR DETAILS. TYPE [*] INDICATES NO-REPAIR
- (A) — CHAINLINK FENCE REPAIR TYPES, SEE SHEETS SF201 AND SF202 FOR DETAILS
- 1.0 — TOP OF WALL LEANING DISTANCE TOWARD CHANNEL IN INCHES, SEE SHEETS SL101 TO SL207 FOR CONCRETE LINING

PHOTO LEGEND:

- A1 — WALL "A" ELEVATION PHOTO IDENTIFICATION SEE FLATTEN VIEW FOR PHOTO LOCATION
- B1 — WALL "B" ELEVATION PHOTO IDENTIFICATION SEE FLATTEN VIEW FOR PHOTO LOCATION
- F1 — CHANNEL FLOOR PHOTO IDENTIFICATION SEE FLOOR PLAN VIEW FOR PHOTO LOCATION

B1



B2



B3



F1



F2



F3



A1



A2



A3



### SPALL REPAIR CHART

| MARK | LOCATION | REPAIR TYPE | SPALL DIMENSION L | SPALL DIMENSION W | SPALL DIMENSION D | SPALL VOLUME | SPALL CENTER COORDINATE X | SPALL CENTER COORDINATE Y OR Z | RATING |
|---|---|---|---|---|---|---|---|---|---|
| "SP-1" | WALL "A" | 3 | 24 | 18 | 2 | 864 | 12 | 4 | 7 |

### CHAINLINK FENCE REPAIR CHART

| MARK | LOCATION | REPAIR TYPE | POSTS | TOP RAIL | BOTTOM WIRE | BRACE | FABRIC |
|---|---|---|---|---|---|---|---|
| "CF-1" | WALL "A" | C | - | MISSING 25' | - | - | - |
| "CF-2" | WALL "A" | E | - | - | - | - | MISSING 25'x6' |
| "CF-3" | WALL "A" | D | - | - | MISSING 25' | - | - |
| "CF-4" | WALL "A" | A | - | - | - | - | - |
| "CF-5" | WALL "B" | B | - | - | - | - | DAMAGED 10'x6' |

NOT IN CONTRACT

### CRACK REPAIR CHART

| MARK | LOCATION | REPAIR TYPE | GENERAL CRACKS (LF) | MAJOR CRACKS WIDTH (IN) | MAJOR CRACKS LENGTH (FT) | MAJOR CRACKS START PNT X | MAJOR CRACKS START PNT Y,Z | MAJOR CRACKS END PNT X | MAJOR CRACKS END PNT Y,Z | RATING |
|---|---|---|---|---|---|---|---|---|---|---|
| "GC-1" | WALL "A" | * | 30 | - | - | - | - | - | - | 8 |
| "GC-2" | FLOOR | * | 185 | - | - | - | - | - | - | 8 |
| "GC-3" | WALL "B" | * | 30 | - | - | - | - | - | - | 8 |

GRAPHIC SCALES:

0 1' 2' 4' 8' 12' 16'

3/16"=1'-0"

| REVISION NO. | DATE | REVISIONS | BY |
|---|---|---|---|

ARTHER R DAR
LICENSED PROFESSIONAL ENGINEER
No. 7808-S
HAWAII U.S.A.

Exp. Date: 4-30-20

THIS WORK WAS PREPARED BY ME OR UNDER MY SUPERVISION AND CONSTRUCTION OF THIS PROJECT WILL BE UNDER MY OBSERVATION

DEPARTMENT OF HAWAIIAN HOMELAND

# NANAKULI FLOOD CONTROL CHANNEL IMPROVEMENTS NANAKULI VALLEY, OAHU HAWAII

CHANNEL SEGMENT 024 REPAIR DETAILS

| | |
|---|---|
| DESIGNED BY: | TTP |
| DRAWN BY: | AK, AP, DL |
| CHECKED BY: | AD |
| SUPV: | |
| DATE: | 03/05/2019 |

HAWAII ENGINEERING GROUP, Inc.
Civil & Structural Engineers
1088 BISHOP STREET #2506
HONOLULU, HI 96813
Tel: 808-533-2092

JOB NO.

SHEET C024
31 OF 225 SHTS

FILE ___ DRAWER ___ ___ FOLDER ___ ___

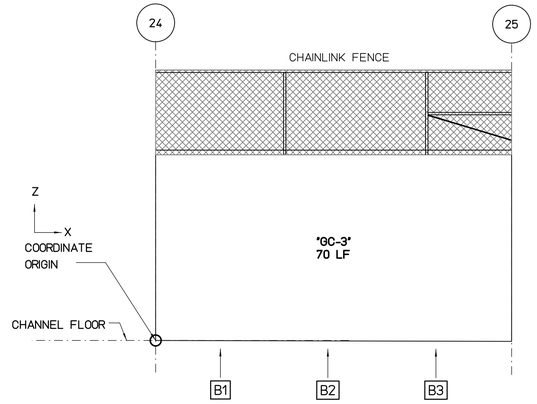


## WALL "B" FLATTEN VIEW

SCALE : 3/16" = 1'-0"

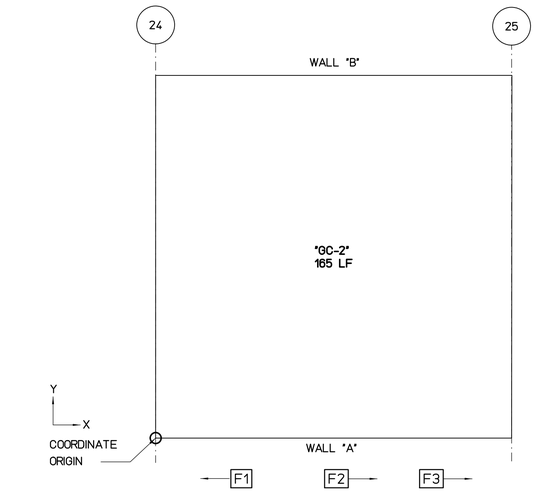


## FLOOR PLAN VIEW

SCALE : 3/16" = 1'-0"

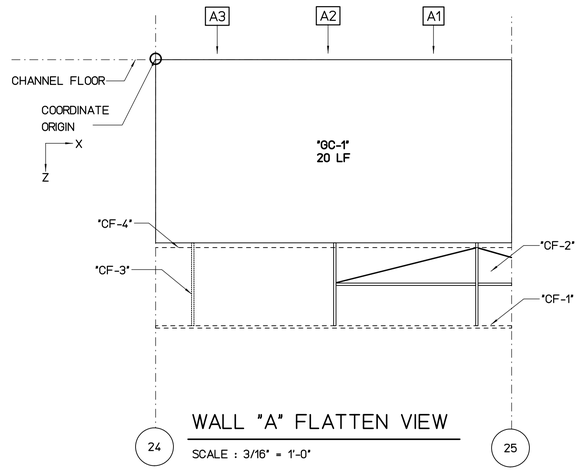


## WALL "A" FLATTEN VIEW

SCALE : 3/16" = 1'-0"

REPAIR LEGEND AND NOTES:

- 2 — CRACK AND SPALL REPAIR TYPES, SEE SHEETS SR201 AND SR202 FOR DETAILS. TYPE [*] INDICATES NO-REPAIR
- (A) — CHAINLINK FENCE REPAIR TYPES, SEE SHEETS SF201 AND SF202 FOR DETAILS
- 1.0 — TOP OF WALL LEANING DISTANCE TOWARD CHANNEL IN INCHES, SEE SHEETS SL101 TO SL207 FOR CONCRETE LINING

PHOTO LEGEND:

- A1 — WALL "A" ELEVATION PHOTO IDENTIFICATION SEE FLATTEN VIEW FOR PHOTO LOCATION
- B1 — WALL "B" ELEVATION PHOTO IDENTIFICATION SEE FLATTEN VIEW FOR PHOTO LOCATION
- F1 — CHANNEL FLOOR PHOTO IDENTIFICATION SEE FLOOR PLAN VIEW FOR PHOTO LOCATION

B1



B2



B3



F1



F2



F3



A1



A2



A3



### SPALL REPAIR CHART

| MARK | LOCATION | REPAIR TYPE | SPALL DIMENSION | | | SPALL VOLUME | SPALL CENTER COORDINATE | | RATING |
|---|---|---|---|---|---|---|---|---|---|
| | | | H | W | D | | X | Y OR Z | |
| | | | | | | | | | |
| | | | | | | | | | |
| | | | | | | | | | |
| | | | | | | | | | |
| | | | | | | | | | |
| | | | | | | | | | |
| | | | | | | | | | |
| | | | | | | | | | |

### CHAINLINK FENCE REPAIR CHART

| MARK | LOCATION | REPAIR TYPE | POSTS | TOP RAIL | BOTTOM WIRE | BRACE | FABRIC |
|---|---|---|---|---|---|---|---|
| "CF-1" | WALL "A" | (C) | - | MISSING 25' | - | - | - |
| "CF-2" | WALL "A" | (E) | - | - | - | - | MISSING 25'x6' |
| "CF-3" | WALL "A" | (A) | MISSING 1 | - | - | - | - |
| "CF-4" | WALL "A" | (D) | - | - | MISSING 20' | - | - |

NOT IN CONTRACT

### CRACK REPAIR CHART

| MARK | LOCATION | REPAIR TYPE | GENERAL CRACKS (LF) | MAJOR CRACKS | | | | | | RATING |
|---|---|---|---|---|---|---|---|---|---|---|
| | | | | WIDTH (IN) | LENGTH (FT) | START PNT X | START PNT Y,Z | END PNT X | END PNT Y,Z | |
| "GC-1" | WALL "A" | [*] | 20 | - | - | - | - | - | - | 8 |
| "GC-2" | FLOOR | [*] | 165 | - | - | - | - | - | - | 8 |
| "GC-3" | WALL "B" | [*] | 70 | - | - | - | - | - | - | 8 |
| | | | | | | | | | | |
| | | | | | | | | | | |
| | | | | | | | | | | |
| | | | | | | | | | | |

GRAPHIC SCALES:

0 1' 2' 4' 8' 12' 16'

3/16"=1'-0"

| REVISION NO. | DATE | REVISIONS | BY |
|---|---|---|---|
| | | | |

ATHER R. DAR
LICENSED PROFESSIONAL ENGINEER
No. 7808-S
HAWAII U.S.A.

Exp. Date: 4-30-20

THIS WORK WAS PREPARED BY ME OR UNDER MY SUPERVISION AND CONSTRUCTION OF THIS PROJECT WILL BE UNDER MY OBSERVATION

DEPARTMENT OF HAWAIIAN HOMELAND

# NANAKULI FLOOD CONTROL CHANNEL IMPROVEMENTS NANAKULI VALLEY, OAHU HAWAII

## CHANNEL SEGMENT 025 REPAIR DETAILS

| | |
|---|---|
| DESIGNED BY: | TTP |
| DRAWN BY: | AK, AP, DL |
| CHECKED BY: | AD |
| SUPV: | |
| DATE: | 03/05/2019 |


HAWAII ENGINEERING GROUP, Inc.
Civil & Structural Engineers
1088 BISHOP STREET #2506
HONOLULU, HI 96813
Tel: 808-533-2092


JOB NO.

SHEET C025

32 OF 225 SHTS

FILE ___ DRAWER ___ ___ FOLDER ___ ___

Plot date: 15-Apr-2020

Full Size Plot

Plot date: 15-Apr-2020
Full Size Plot

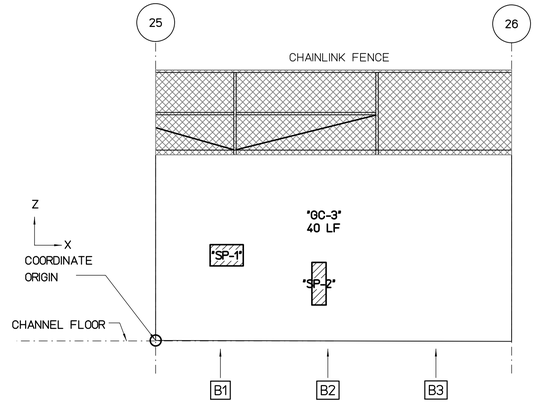


## WALL "B" FLATTEN VIEW

SCALE : 3/16" = 1'-0"

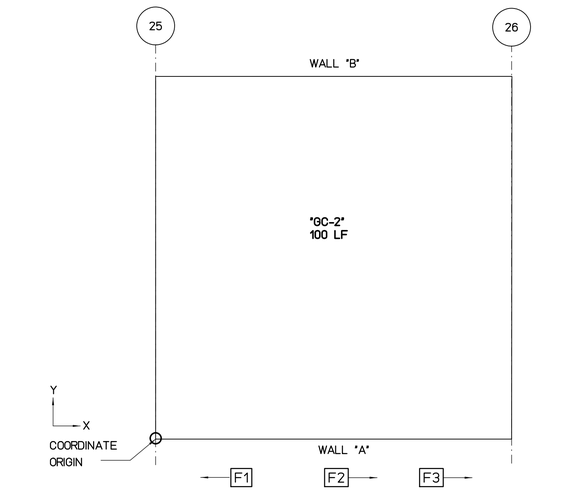


## FLOOR PLAN VIEW

SCALE : 3/16" = 1'-0"

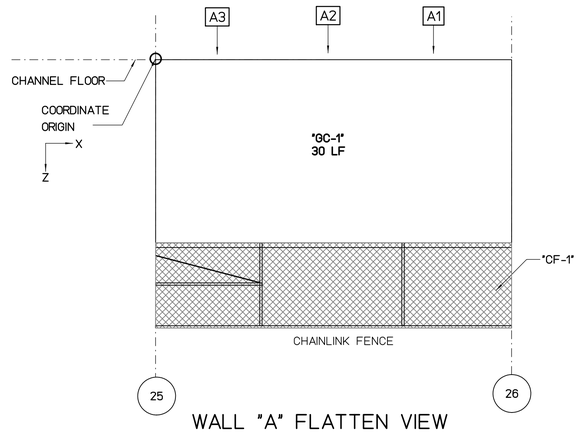


## WALL "A" FLATTEN VIEW

SCALE : 3/16" = 1'-0"

REPAIR LEGEND AND NOTES:

- 2 — CRACK AND SPALL REPAIR TYPES, SEE SHEETS SR201 AND SR202 FOR DETAILS. TYPE ⊠ INDICATES NO-REPAIR
- Ⓐ — CHAINLINK FENCE REPAIR TYPES, SEE SHEETS SF201 AND SF202 FOR DETAILS
- 1.0 — TOP OF WALL LEANING DISTANCE TOWARD CHANNEL IN INCHES, SEE SHEETS SL101 TO SL207 FOR CONCRETE LINING

PHOTO LEGEND:

- A1 — WALL "A" ELEVATION PHOTO IDENTIFICATION SEE FLATTEN VIEW FOR PHOTO LOCATION
- B1 — WALL "B" ELEVATION PHOTO IDENTIFICATION SEE FLATTEN VIEW FOR PHOTO LOCATION
- F1 — CHANNEL FLOOR PHOTO IDENTIFICATION SEE FLOOR PLAN VIEW FOR PHOTO LOCATION

B1



B2



B3



F1



F2



F3



A1



A2



A3



### SPALL REPAIR CHART

| MARK | LOCATION | REPAIR TYPE | SPALL DIMENSION L | SPALL DIMENSION W | SPALL DIMENSION D | SPALL VOLUME | SPALL CENTER COORDINATE X | SPALL CENTER COORDINATE Y OR Z | RATING |
|---|---|---|---|---|---|---|---|---|---|
| "SP-1" | WALL "B" | 3 | 28 | 18 | 2 | 1008 | 5 | 6 | 7 |
| "SP-2" | WALL "B" | 3 | 12 | 36 | 2 | 864 | 11.5 | 4 | 7 |

### CHAINLINK FENCE REPAIR CHART

| MARK | LOCATION | REPAIR TYPE | POSTS | TOP RAIL | BOTTOM WIRE | BRACE | FABRIC |
|---|---|---|---|---|---|---|---|
| "CF-1" | WALL "A" | Ⓔ | - | - | - | - | DAMAGED 25'x6' |

NOT IN CONTRACT

### CRACK REPAIR CHART

| MARK | LOCATION | REPAIR TYPE | GENERAL CRACKS (LF) | MAJOR CRACKS WIDTH (IN) | MAJOR CRACKS LENGTH (FT) | MAJOR CRACKS START PNT X | MAJOR CRACKS START PNT Y,Z | MAJOR CRACKS END PNT X | MAJOR CRACKS END PNT Y,Z | RATING |
|---|---|---|---|---|---|---|---|---|---|---|
| "GC-1" | WALL "A" | ⊠ | 30 | - | - | - | - | - | - | 8 |
| "GC-2" | FLOOR | ⊠ | 100 | - | - | - | - | - | - | 8 |
| "GC-3" | WALL "B" | ⊠ | 40 | - | - | - | - | - | - | 8 |

GRAPHIC SCALES:

0 1' 2' 4' 8' 12' 16'

3/16"=1'-0"

| REVISION NO. | DATE | REVISIONS | BY |
|---|---|---|---|

ATHER R. DAR
LICENSED PROFESSIONAL ENGINEER
No. 7808-S
HAWAII U.S.A.

Exp. Date: 4-30-20

THIS WORK WAS PREPARED BY ME OR UNDER MY SUPERVISION AND CONSTRUCTION OF THIS PROJECT WILL BE UNDER MY OBSERVATION

DEPARTMENT OF HAWAIIAN HOMELAND

NANAKULI FLOOD CONTROL
CHANNEL IMPROVEMENTS
NANAKULI VALLEY, OAHU HAWAII

CHANNEL SEGMENT 026 REPAIR DETAILS

| | |
|---|---|
| DESIGNED BY: | TTP |
| DRAWN BY: | AK, AP, DL |
| CHECKED BY: | AD |
| SUPV: | |
| DATE: | 03/05/2019 |

HAWAII ENGINEERING GROUP, Inc.
Civil & Structural Engineers
1088 BISHOP STREET #2506
HONOLULU, HI 96813
Tel: 808-533-2092

JOB NO.

SHEET C026
33 OF 225 SHTS

FILE ___ DRAWER ___ ___ FOLDER ___ ___

Plot date: 15-Apr-2020
Full Size Plot

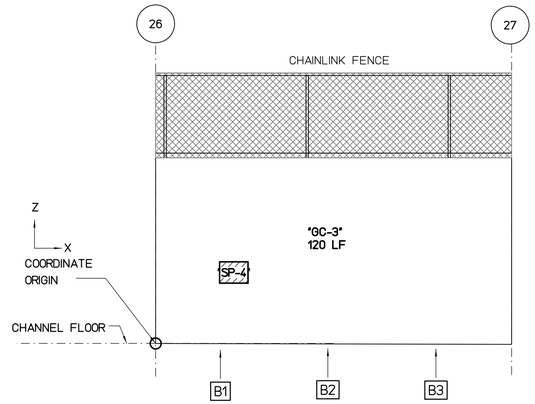


## WALL "B" FLATTEN VIEW

SCALE : 3/16" = 1'-0"

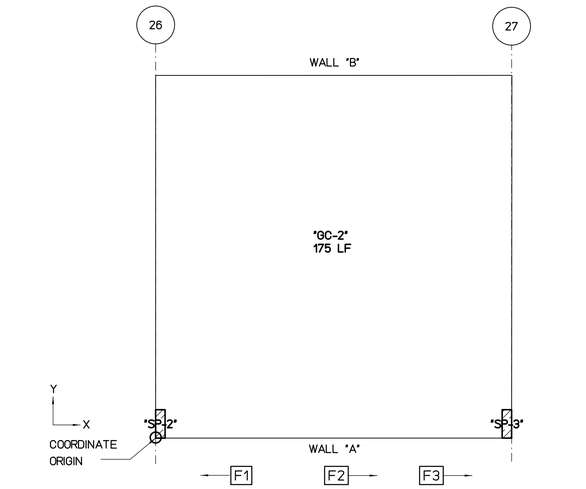


## FLOOR PLAN VIEW

SCALE : 3/16" = 1'-0"

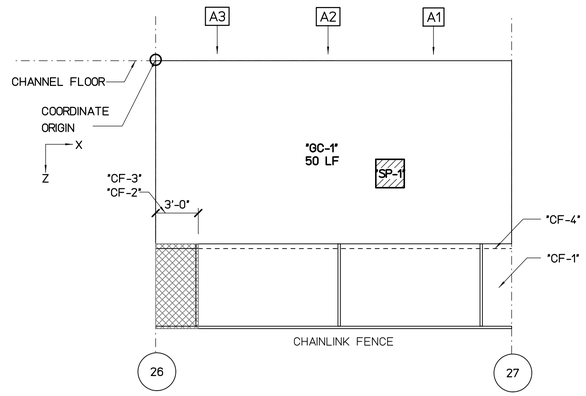


## WALL "A" FLATTEN VIEW

SCALE : 3/16" = 1'-0"

REPAIR LEGEND AND NOTES:

- 2 — CRACK AND SPALL REPAIR TYPES, SEE SHEETS SR201 AND SR202 FOR DETAILS. TYPE [*] INDICATES NO-REPAIR
- (A) — CHAINLINK FENCE REPAIR TYPES, SEE SHEETS SF201 AND SF202 FOR DETAILS
- 1.0 — TOP OF WALL LEANING DISTANCE TOWARD CHANNEL IN INCHES, SEE SHEETS SL101 TO SL207 FOR CONCRETE LINING

PHOTO LEGEND:

- A1 — WALL "A" ELEVATION PHOTO IDENTIFICATION SEE FLATTEN VIEW FOR PHOTO LOCATION
- B1 — WALL "B" ELEVATION PHOTO IDENTIFICATION SEE FLATTEN VIEW FOR PHOTO LOCATION
- F1 — CHANNEL FLOOR PHOTO IDENTIFICATION SEE FLOOR PLAN VIEW FOR PHOTO LOCATION

B1



B2



B3



F1



F2



F3



A1



A2



A3



### SPALL REPAIR CHART

| MARK | LOCATION | REPAIR TYPE | SPALL DIMENSION L | SPALL DIMENSION W | SPALL DIMENSION D | SPALL VOLUME | SPALL CENTER COORDINATE X | SPALL CENTER COORDINATE Y OR Z | RATING |
|---|---|---|---|---|---|---|---|---|---|
| "SP-1" | WALL "A" | 3 | 24 | 24 | 2 | 1152 | 16.5 | 8 | 7 |
| "SP-2" | FLOOR | 3 | 8 | 24 | 2 | 384 | 0.3 | 1 | 7 |
| "SP-3" | FLOOR | 3 | 8 | 24 | 2 | 384 | 24.7 | 1 | 7 |
| "SP-4" | WALL "B" | 3 | 24 | 18 | 2 | 864 | 5.5 | 5 | 7 |

### CHAINLINK FENCE REPAIR CHART

| MARK | LOCATION | REPAIR TYPE | POSTS | TOP RAIL | BOTTOM WIRE | BRACE | FABRIC |
|---|---|---|---|---|---|---|---|
| "CF-1" | WALL "A" | (E) | - | - | - | - | MISSING 22'x6' |
| "CF-2" | WALL "A" | (E) | - | - | - | - | DAMAGED 3'x6' |
| "CF-3" | WALL "A" | (D) | - | - | DAMAGED 3' | - | - |
| "CF-4" | WALL "A" | (D) | - | - | MISSING 22' | - | - |

NOT IN CONTRACT

### CRACK REPAIR CHART

| MARK | LOCATION | REPAIR TYPE | GENERAL CRACKS (LF) | MAJOR CRACKS WIDTH (IN) | MAJOR CRACKS LENGTH (FT) | MAJOR CRACKS START PNT X | MAJOR CRACKS START PNT Y,Z | MAJOR CRACKS END PNT X | MAJOR CRACKS END PNT Y,Z | RATING |
|---|---|---|---|---|---|---|---|---|---|---|
| "GC-1" | WALL "A" | * | 50 | - | - | - | - | - | - | 8 |
| "GC-2" | FLOOR | * | 175 | - | - | - | - | - | - | 8 |
| "GC-3" | WALL "B" | * | 120 | - | - | - | - | - | - | 8 |

GRAPHIC SCALES:

0 1' 2' 4' 8' 12' 16'

3/16"=1'-0"

| REVISION NO. | DATE | REVISIONS | BY |
|---|---|---|---|

ATHER R. DAR
LICENSED PROFESSIONAL ENGINEER
No. 7808-S
HAWAII U.S.A.

Exp. Date: 4-30-20

THIS WORK WAS PREPARED BY ME OR UNDER MY SUPERVISION AND CONSTRUCTION OF THIS PROJECT WILL BE UNDER MY OBSERVATION

DEPARTMENT OF HAWAIIAN HOMELAND

NANAKULI FLOOD CONTROL
CHANNEL IMPROVEMENTS
NANAKULI VALLEY, OAHU HAWAII

CHANNEL SEGMENT 027 REPAIR DETAILS

| | |
|---|---|
| DESIGNED BY: | TTP |
| DRAWN BY: | AK, AP, DL |
| CHECKED BY: | AD |
| SUPV: | |
| DATE: | 03/05/2019 |

HAWAII ENGINEERING GROUP, Inc.
Civil & Structural Engineers
1088 BISHOP STREET #2506
HONOLULU, HI 96813
Tel: 808-533-2092

JOB NO.

SHEET C027
34 OF 225 SHTS

FILE ___ DRAWER ___ ___ FOLDER ___ ___

Plot date: 15-Apr-2020
Full Size Plot

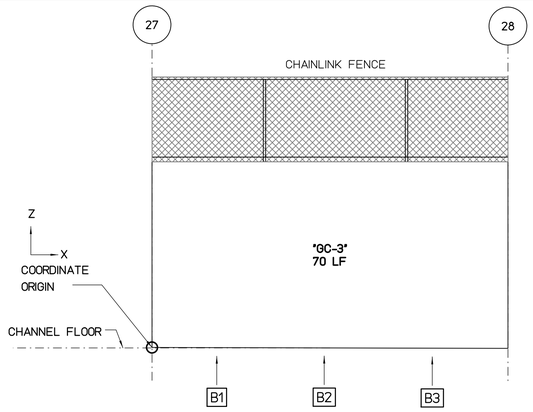


## WALL "B" FLATTEN VIEW

SCALE : 3/16" = 1'-0"

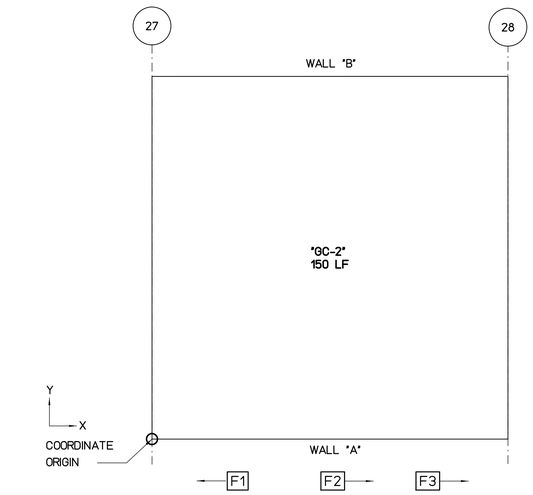


## FLOOR PLAN VIEW

SCALE : 3/16" = 1'-0"

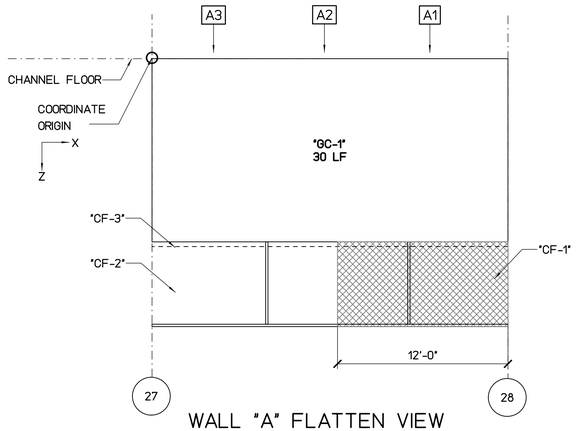


## WALL "A" FLATTEN VIEW

SCALE : 3/16" = 1'-0"

REPAIR LEGEND AND NOTES:

- 2 — CRACK AND SPALL REPAIR TYPES, SEE SHEETS SR201 AND SR202 FOR DETAILS. TYPE [*] INDICATES NO-REPAIR
- (A) — CHAINLINK FENCE REPAIR TYPES, SEE SHEETS SF201 AND SF202 FOR DETAILS
- 1.0 — TOP OF WALL LEANING DISTANCE TOWARD CHANNEL IN INCHES, SEE SHEETS SL101 TO SL207 FOR CONCRETE LINING

PHOTO LEGEND:

- A1 — WALL "A" ELEVATION PHOTO IDENTIFICATION SEE FLATTEN VIEW FOR PHOTO LOCATION
- B1 — WALL "B" ELEVATION PHOTO IDENTIFICATION SEE FLATTEN VIEW FOR PHOTO LOCATION
- F1 — CHANNEL FLOOR PHOTO IDENTIFICATION SEE FLOOR PLAN VIEW FOR PHOTO LOCATION

B1



B2



B3



F1



F2



F3



A1



A2



A3



### SPALL REPAIR CHART

| MARK | LOCATION | REPAIR TYPE | SPALL DIMENSION | | | SPALL VOLUME | SPALL CENTER COORDINATE | | RATING |
|---|---|---|---|---|---|---|---|---|---|
| | | | L | W | D | | X | Y OR Z | |
| | | | | | | | | | |
| | | | | | | | | | |
| | | | | | | | | | |
| | | | | | | | | | |
| | | | | | | | | | |
| | | | | | | | | | |
| | | | | | | | | | |
| | | | | | | | | | |

### CHAINLINK FENCE REPAIR CHART

| MARK | LOCATION | REPAIR TYPE | POSTS | TOP RAIL | BOTTOM WIRE | BRACE | FABRIC |
|---|---|---|---|---|---|---|---|
| "CF-1" | WALL "A" | (E) | - | - | - | - | DAMAGED 12'x6' |
| "CF-2" | WALL "A" | (E) | - | - | - | - | MISSING 13'x6' |
| "CF-3" | WALL "A" | (D) | | - | MISSING 25' | - | - |
| | | | | | | | |
| | | | | | | | |
| | | | | | | | |
| | | | | | | | |
| | | | | | | | |
| | | | | | | | |

NOT IN CONTRACT

### CRACK REPAIR CHART

| MARK | LOCATION | REPAIR TYPE | GENERAL CRACKS (LF) | MAJOR CRACKS | | | | | | RATING |
|---|---|---|---|---|---|---|---|---|---|---|
| | | | | WIDTH (IN) | LENGTH (FT) | START PNT X | START PNT Y,Z | END PNT X | END PNT Y,Z | |
| "GC-1" | WALL "A" | [*] | 30 | - | - | - | - | - | - | 8 |
| "GC-2" | FLOOR | [*] | 150 | - | - | - | - | - | - | 8 |
| "GC-3" | WALL "B" | [*] | 70 | - | - | - | - | - | - | 8 |
| | | | | | | | | | | |
| | | | | | | | | | | |
| | | | | | | | | | | |
| | | | | | | | | | | |

GRAPHIC SCALES:

0 1' 2' 4' 8' 12' 16'

3/16"=1'-0"

| REVISION NO. | DATE | REVISIONS | BY |
|---|---|---|---|
| | | | |

ATHER R. DAR
LICENSED PROFESSIONAL ENGINEER
No. 7808-S
HAWAII U.S.A.

Exp. Date: 4-30-20

THIS WORK WAS PREPARED BY ME OR UNDER MY SUPERVISION AND CONSTRUCTION OF THIS PROJECT WILL BE UNDER MY OBSERVATION

DEPARTMENT OF HAWAIIAN HOMELAND

NANAKULI FLOOD CONTROL
CHANNEL IMPROVEMENTS
NANAKULI VALLEY, OAHU HAWAII

CHANNEL SEGMENT 028 REPAIR DETAILS

| | |
|---|---|
| DESIGNED BY: | TTP |
| DRAWN BY: | AK, AP, DL |
| CHECKED BY: | AD |
| SUPV: | |
| DATE: | 03/05/2019 |

HAWAII ENGINEERING GROUP, Inc.
Civil & Structural Engineers
1088 BISHOP STREET #2506
HONOLULU, HI 96813
Tel: 808-533-2092

JOB NO.

SHEET C028
35 OF 225 SHTS

FILE ___ DRAWER ___ ___ FOLDER ___ ___

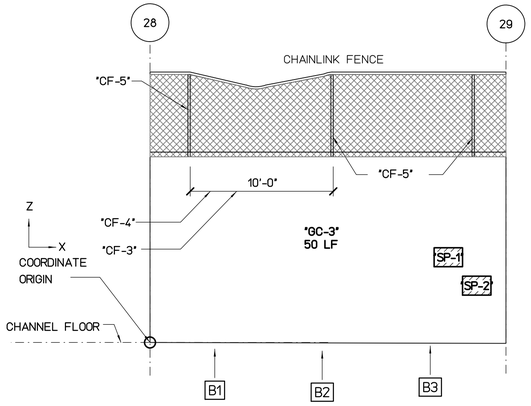


## WALL "B" FLATTEN VIEW

SCALE : 3/16" = 1'-0"

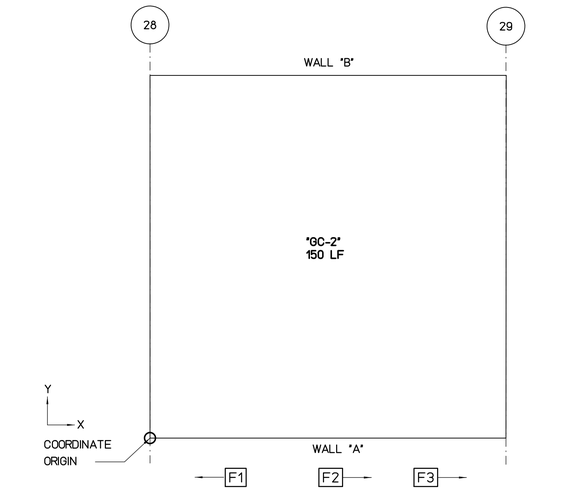


## FLOOR PLAN VIEW

SCALE : 3/16" = 1'-0"

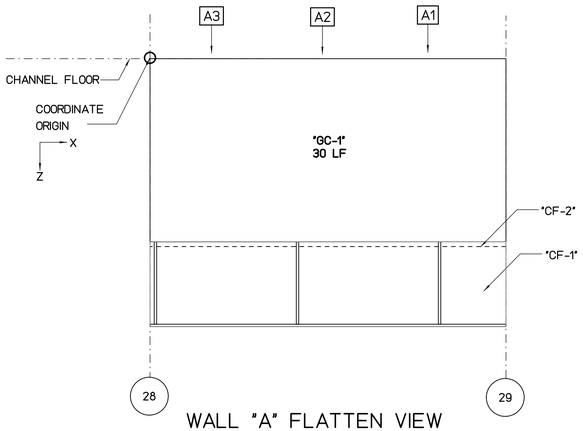


## WALL "A" FLATTEN VIEW

SCALE : 3/16" = 1'-0"

REPAIR LEGEND AND NOTES:

- 2 — CRACK AND SPALL REPAIR TYPES, SEE SHEETS SR201 AND SR202 FOR DETAILS. TYPE ⊠ INDICATES NO-REPAIR
- Ⓐ — CHAINLINK FENCE REPAIR TYPES, SEE SHEETS SF201 AND SF202 FOR DETAILS
- 1.0 — TOP OF WALL LEANING DISTANCE TOWARD CHANNEL IN INCHES, SEE SHEETS SL101 TO SL207 FOR CONCRETE LINING

PHOTO LEGEND:

- A1 — WALL "A" ELEVATION PHOTO IDENTIFICATION SEE FLATTEN VIEW FOR PHOTO LOCATION
- B1 — WALL "B" ELEVATION PHOTO IDENTIFICATION SEE FLATTEN VIEW FOR PHOTO LOCATION
- F1 — CHANNEL FLOOR PHOTO IDENTIFICATION SEE FLOOR PLAN VIEW FOR PHOTO LOCATION

B1



B2



B3



F1



F2



F3



A1



A2



A3



### SPALL REPAIR CHART

| MARK | LOCATION | REPAIR TYPE | SPALL DIMENSION L | SPALL DIMENSION W | SPALL DIMENSION D | SPALL VOLUME | SPALL CENTER COORDINATE X | SPALL CENTER COORDINATE Y OR Z | RATING |
|---|---|---|---|---|---|---|---|---|---|
| "SP-1" | WALL "B" | 3 | 24 | 16 | 2 | 768 | 21 | 6 | 7 |
| "SP-2" | WALL "B" | 3 | 24 | 16 | 2 | 768 | 23 | 4 | 7 |

### CHAINLINK FENCE REPAIR CHART

| MARK | LOCATION | REPAIR TYPE | POSTS | TOP RAIL | BOTTOM WIRE | BRACE | FABRIC |
|---|---|---|---|---|---|---|---|
| "CF-1" | WALL "A" | Ⓔ | - | - | - | - | MISSING 25'x6' |
| "CF-2" | WALL "A" | Ⓓ | - | - | MISSING 25' | - | - |
| "CF-3" | WALL "B" | Ⓒ | - | BENT 10' | - | - | - |
| "CF-4" | WALL "B" | Ⓑ | - | - | - | - | DAMAGED 10'x6' |
| "CF-5" | WALL "B" | Ⓐ | - | BENT 3' | - | - | - |

NOT IN CONTRACT

### CRACK REPAIR CHART

| MARK | LOCATION | REPAIR TYPE | GENERAL CRACKS (LF) | MAJOR CRACKS WIDTH (IN) | MAJOR CRACKS LENGTH (FT) | MAJOR CRACKS START PNT X | MAJOR CRACKS START PNT Y,Z | MAJOR CRACKS END PNT X | MAJOR CRACKS END PNT Y,Z | RATING |
|---|---|---|---|---|---|---|---|---|---|---|
| "GC-1" | WALL "A" | ⊠ | 30 | - | - | - | - | - | - | 8 |
| "GC-2" | FLOOR | ⊠ | 150 | - | - | - | - | - | - | 8 |
| "GC-3" | WALL "B" | ⊠ | 50 | - | - | - | - | - | - | 8 |

GRAPHIC SCALES:

0 1' 2' 4' 8' 12' 16'

3/16"=1'-0"

| REVISION NO. | DATE | REVISIONS | BY |
|---|---|---|---|

ARTHER R. DAR — LICENSED PROFESSIONAL ENGINEER — No. 7808-S — HAWAII U.S.A.

Exp. Date: 4-30-20

THIS WORK WAS PREPARED BY ME OR UNDER MY SUPERVISION AND CONSTRUCTION OF THIS PROJECT WILL BE UNDER MY OBSERVATION

DEPARTMENT OF HAWAIIAN HOMELAND

NANAKULI FLOOD CONTROL
CHANNEL IMPROVEMENTS
NANAKULI VALLEY, OAHU HAWAII

CHANNEL SEGMENT 029 REPAIR DETAILS

DESIGNED BY: TTP
DRAWN BY: AK, AP, DL
CHECKED BY: AD
SUPV:
DATE: 03/05/2019

HAWAII ENGINEERING GROUP, Inc.
Civil & Structural Engineers
1088 BISHOP STREET #2506
HONOLULU, HI 96813
Tel: 808-533-2092

JOB NO.

SHEET C029
36 OF 225 SHTS

FILE ___ DRAWER ___ ___ FOLDER ___ ___

Plot date: 15-Apr-2020

Full Size Plot

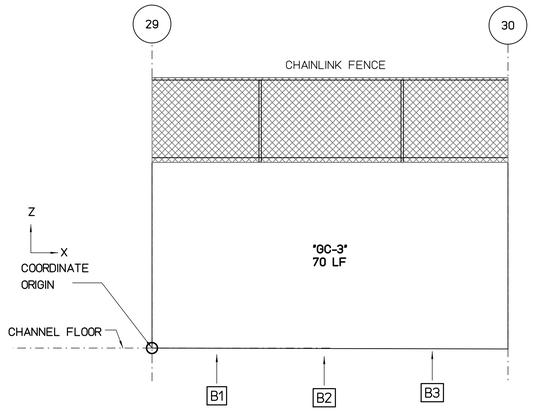


WALL "B" FLATTEN VIEW

SCALE : 3/16" = 1'-0"

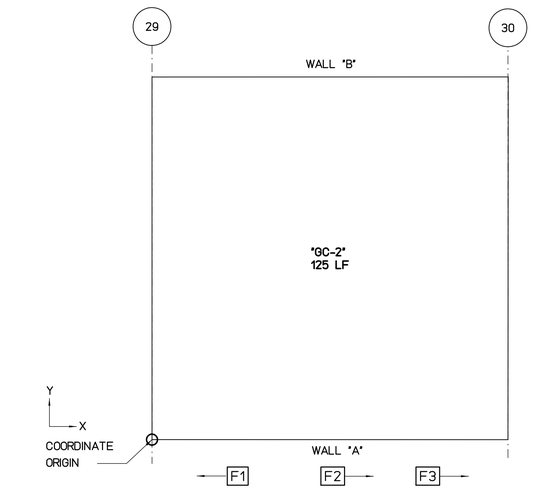


FLOOR PLAN VIEW

SCALE : 3/16" = 1'-0"

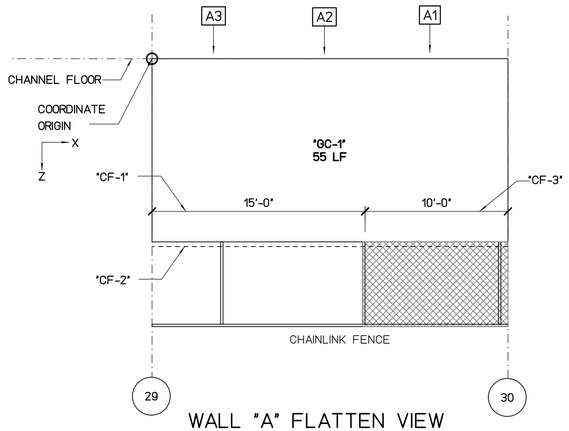


WALL "A" FLATTEN VIEW

SCALE : 3/16" = 1'-0"

REPAIR LEGEND AND NOTES:

- 2 — CRACK AND SPALL REPAIR TYPES, SEE SHEETS SR201 AND SR202 FOR DETAILS. TYPE ⊠ INDICATES NO-REPAIR
- Ⓐ — CHAINLINK FENCE REPAIR TYPES, SEE SHEETS SF201 AND SF202 FOR DETAILS
- 1.0 — TOP OF WALL LEANING DISTANCE TOWARD CHANNEL IN INCHES, SEE SHEETS SL101 TO SL207 FOR CONCRETE LINING

PHOTO LEGEND:

- A1 — WALL "A" ELEVATION PHOTO IDENTIFICATION SEE FLATTEN VIEW FOR PHOTO LOCATION
- B1 — WALL "B" ELEVATION PHOTO IDENTIFICATION SEE FLATTEN VIEW FOR PHOTO LOCATION
- F1 — CHANNEL FLOOR PHOTO IDENTIFICATION SEE FLOOR PLAN VIEW FOR PHOTO LOCATION

B1



B2



B3



F1



F2



F3



A1



A2



A3



SPALL REPAIR CHART

| MARK | LOCATION | REPAIR TYPE | SPALL DIMENSION L | SPALL DIMENSION W | SPALL DIMENSION D | SPALL VOLUME | SPALL CENTER COORDINATE X | SPALL CENTER COORDINATE Y OR Z | RATING |
|---|---|---|---|---|---|---|---|---|---|
| | | | | | | | | | |
| | | | | | | | | | |
| | | | | | | | | | |
| | | | | | | | | | |
| | | | | | | | | | |
| | | | | | | | | | |
| | | | | | | | | | |
| | | | | | | | | | |

CHAINLINK FENCE REPAIR CHART

| MARK | LOCATION | REPAIR TYPE | POSTS | TOP RAIL | BOTTOM WIRE | BRACE | FABRIC |
|---|---|---|---|---|---|---|---|
| "CF-1" | WALL "A" | Ⓔ | - | - | - | - | MISSING 15'x6' |
| "CF-2" | WALL "A" | Ⓓ | - | - | MISSING 25' | - | |
| "CF-3" | WALL "A" | Ⓔ | | - | - | - | DAMAGED 10'x6 |

NOT IN CONTRACT

CRACK REPAIR CHART

| MARK | LOCATION | REPAIR TYPE | GENERAL CRACKS (LF) | MAJOR CRACKS WIDTH (IN) | MAJOR CRACKS LENGTH (FT) | MAJOR CRACKS START PNT X | MAJOR CRACKS START PNT Y,Z | MAJOR CRACKS END PNT X | MAJOR CRACKS END PNT Y,Z | RATING |
|---|---|---|---|---|---|---|---|---|---|---|
| "GC-1" | WALL "A" | ⊠ | 55 | - | - | - | - | - | - | 8 |
| "GC-2" | FLOOR | ⊠ | 125 | - | - | - | - | - | - | 8 |
| "GC-3" | WALL "B" | ⊠ | 70 | - | - | - | - | - | - | 8 |
| | | | | | | | | | | |
| | | | | | | | | | | |
| | | | | | | | | | | |
| | | | | | | | | | | |

GRAPHIC SCALES:

0 1' 2' 4' 8' 12' 16'

3/16"=1'-0"

| REVISION NO. | DATE | REVISIONS | BY |
|---|---|---|---|
| | | | |

ATHER R. DAR
LICENSED PROFESSIONAL ENGINEER
No. 7808-S
HAWAII U.S.A.

Exp. Date: 4-30-20

THIS WORK WAS PREPARED BY ME OR UNDER MY SUPERVISION AND CONSTRUCTION OF THIS PROJECT WILL BE UNDER MY OBSERVATION

DEPARTMENT OF HAWAIIAN HOMELAND

NANAKULI FLOOD CONTROL
CHANNEL IMPROVEMENTS
NANAKULI VALLEY, OAHU HAWAII

CHANNEL SEGMENT 030 REPAIR DETAILS

| | |
|---|---|
| DESIGNED BY: | TTP |
| DRAWN BY: | AK, AP, DL |
| CHECKED BY: | AD |
| SUPV: | |
| DATE: | 03/05/2019 |

HAWAII ENGINEERING GROUP, Inc.
Civil & Structural Engineers
1088 BISHOP STREET #2506
HONOLULU, HI 96813
Tel: 808-533-2092

JOB NO.

SHEET C030
37 OF 225 SHTS

FILE ___ DRAWER ___ ___ FOLDER ___ ___

Plot date: 15-Apr-2020

Full Size Plot

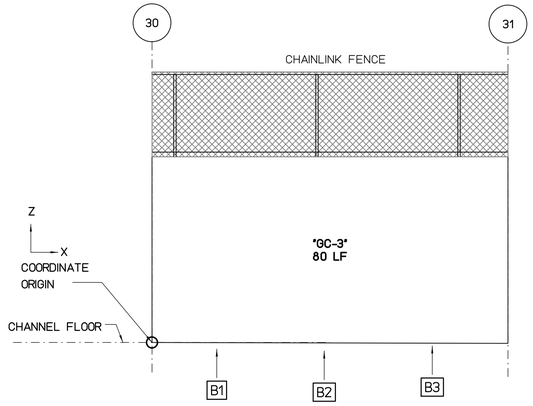


## WALL "B" FLATTEN VIEW

SCALE : 3/16" = 1'-0"

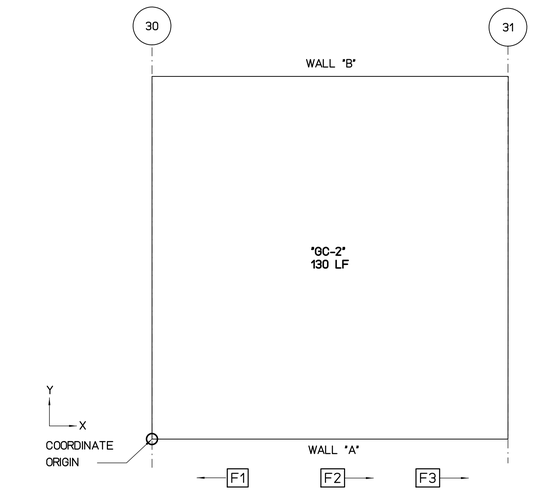


## FLOOR PLAN VIEW

SCALE : 3/16" = 1'-0"

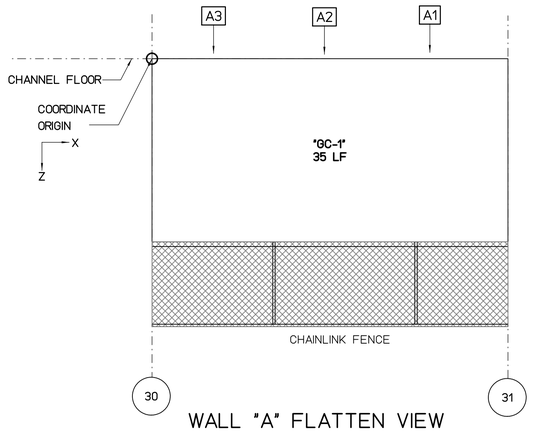


## WALL "A" FLATTEN VIEW

SCALE : 3/16" = 1'-0"

**REPAIR LEGEND AND NOTES:**

- 2 — CRACK AND SPALL REPAIR TYPES, SEE SHEETS SR201 AND SR202 FOR DETAILS. TYPE ✱ INDICATES NO-REPAIR
- Ⓐ — CHAINLINK FENCE REPAIR TYPES, SEE SHEETS SF201 AND SF202 FOR DETAILS
- 1.0 — TOP OF WALL LEANING DISTANCE TOWARD CHANNEL IN INCHES, SEE SHEETS SL101 TO SL207 FOR CONCRETE LINING

**PHOTO LEGEND:**

- A1 — WALL "A" ELEVATION PHOTO IDENTIFICATION SEE FLATTEN VIEW FOR PHOTO LOCATION
- B1 — WALL "B" ELEVATION PHOTO IDENTIFICATION SEE FLATTEN VIEW FOR PHOTO LOCATION
- F1 — CHANNEL FLOOR PHOTO IDENTIFICATION SEE FLOOR PLAN VIEW FOR PHOTO LOCATION

B1



B2



B3



F1



F2



F3



A1



A2



A3



### SPALL REPAIR CHART

| MARK | LOCATION | REPAIR TYPE | SPALL DIMENSION | | | SPALL VOLUME | SPALL CENTER COORDINATE | | RATING |
|---|---|---|---|---|---|---|---|---|---|
| | | | L | W | D | | X | Y OR Z | |
| | | | | | | | | | |
| | | | | | | | | | |
| | | | | | | | | | |
| | | | | | | | | | |
| | | | | | | | | | |
| | | | | | | | | | |
| | | | | | | | | | |
| | | | | | | | | | |

### CHAINLINK FENCE REPAIR CHART

| MARK | LOCATION | REPAIR TYPE | POSTS | TOP RAIL | BOTTOM WIRE | BRACE | FABRIC |
|---|---|---|---|---|---|---|---|
| | | | | | | | |
| | | | | | | | |
| | | | | | | | |
| | | | | | | | |
| | | | | | | | |
| | | | | | | | |
| | | | | | | | |
| | | | | | | | |
| | | | | | | | |

NOT IN CONTRACT

### CRACK REPAIR CHART

| MARK | LOCATION | REPAIR TYPE | GENERAL CRACKS (LF) | MAJOR CRACKS | | | | | | RATING |
|---|---|---|---|---|---|---|---|---|---|---|
| | | | | WIDTH (IN) | LENGTH (FT) | START PNT | | END PNT | | |
| | | | | | | X | Y,Z | X | Y,Z | |
| "GC-1" | WALL "A" | ✱ | 35 | - | - | - | - | - | - | 8 |
| "GC-2" | FLOOR | ✱ | 130 | - | - | - | - | - | - | 8 |
| "GC-3" | WALL "B" | ✱ | 80 | - | - | - | - | - | - | 8 |
| | | | | | | | | | | |
| | | | | | | | | | | |
| | | | | | | | | | | |
| | | | | | | | | | | |

GRAPHIC SCALES:

0 1' 2' 4' 8' 12' 16'

3/16"=1'-0"

| REVISION NO. | DATE | REVISIONS | BY |
|---|---|---|---|
| | | | |

ATHER R. DAR
LICENSED PROFESSIONAL ENGINEER
No. 7808-S
HAWAII U.S.A.

Exp. Date: 4-30-20

THIS WORK WAS PREPARED BY ME OR UNDER MY SUPERVISION AND CONSTRUCTION OF THIS PROJECT WILL BE UNDER MY OBSERVATION

DEPARTMENT OF HAWAIIAN HOMELAND

# NANAKULI FLOOD CONTROL CHANNEL IMPROVEMENTS NANAKULI VALLEY, OAHU HAWAII

CHANNEL SEGMENT 031 REPAIR DETAILS

| | |
|---|---|
| DESIGNED BY: | TTP |
| DRAWN BY: | AK, AP, DL |
| CHECKED BY: | AD |
| SUPV: | |
| DATE: | 03/05/2019 |


HAWAII ENGINEERING GROUP, Inc.
Civil & Structural Engineers
1088 BISHOP STREET #2506
HONOLULU, HI 96813
Tel: 808-533-2092


JOB NO.

SHEET C031

38 OF 225 SHTS

FILE ___ DRAWER ___ ___ FOLDER ___ ___

Plot date: 15-Apr-2020

Full Size Plot

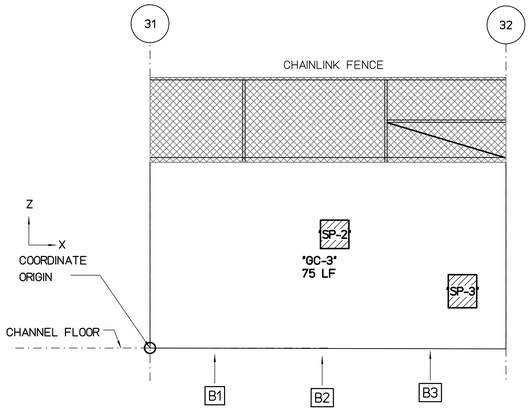


## WALL "B" FLATTEN VIEW

SCALE : 3/16" = 1'-0"

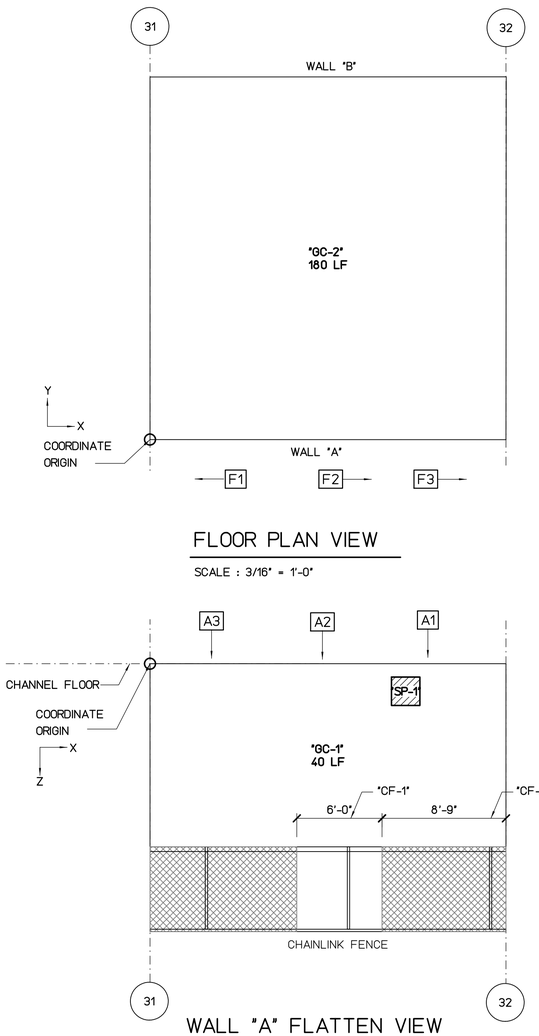


## FLOOR PLAN VIEW

SCALE : 3/16" = 1'-0"




## WALL "A" FLATTEN VIEW

SCALE : 3/16" = 1'-0"

REPAIR LEGEND AND NOTES:

- [2] CRACK AND SPALL REPAIR TYPES, SEE SHEETS SR201 AND SR202 FOR DETAILS. TYPE [*] INDICATES NO-REPAIR
- (A) CHAINLINK FENCE REPAIR TYPES, SEE SHEETS SF201 AND SF202 FOR DETAILS
- [1.0] TOP OF WALL LEANING DISTANCE TOWARD CHANNEL IN INCHES, SEE SHEETS SL101 TO SL207 FOR CONCRETE LINING

PHOTO LEGEND:

- [A1] WALL "A" ELEVATION PHOTO IDENTIFICATION SEE FLATTEN VIEW FOR PHOTO LOCATION
- [B1] WALL "B" ELEVATION PHOTO IDENTIFICATION SEE FLATTEN VIEW FOR PHOTO LOCATION
- [F1] CHANNEL FLOOR PHOTO IDENTIFICATION SEE FLOOR PLAN VIEW FOR PHOTO LOCATION

B1



B2



B3



F1



F2



F3



A1



A2



A3



### SPALL REPAIR CHART

| MARK | LOCATION | REPAIR TYPE | SPALL DIMENSION L | SPALL DIMENSION W | SPALL DIMENSION D | SPALL VOLUME | SPALL CENTER COORDINATE X | SPALL CENTER COORDINATE Y OR Z | RATING |
|---|---|---|---|---|---|---|---|---|---|
| "SP-1" | WALL "A" | [3] | 24 | 24 | 2 | 1152 | 18 | 2 | 7 |
| "SP-2" | WALL "B" | [3] | 24 | 24 | 2 | 1152 | 13 | 8 | 7 |
| "SP-3" | WALL "B" | [3] | 24 | 28 | 2 | 1344 | 22 | 4 | 7 |

### CHAINLINK FENCE REPAIR CHART

| MARK | LOCATION | REPAIR TYPE | POSTS | TOP RAIL | BOTTOM WIRE | BRACE | FABRIC |
|---|---|---|---|---|---|---|---|
| "CF-1" | WALL "A" | (E) | - | - | - | - | MISSING 6'x6' |
| "CF-2" | WALL "A" | (E) | - | - | - | - | DAMAGED 8'-9"x6' |

NOT IN CONTRACT

### CRACK REPAIR CHART

| MARK | LOCATION | REPAIR TYPE | GENERAL CRACKS (LF) | MAJOR CRACKS WIDTH (IN) | MAJOR CRACKS LENGTH (FT) | MAJOR CRACKS START PNT X | MAJOR CRACKS START PNT Y,Z | MAJOR CRACKS END PNT X | MAJOR CRACKS END PNT Y,Z | RATING |
|---|---|---|---|---|---|---|---|---|---|---|
| "GC-1" | WALL "A" | [*] | 40 | - | - | - | - | - | - | 8 |
| "GC-2" | FLOOR | [*] | 180 | - | - | - | - | - | - | 8 |
| "GC-3" | WALL "B" | [*] | 75 | - | - | - | - | - | - | 8 |

GRAPHIC SCALES:

0 1' 2' 4' 8' 12' 16'

3/16"=1'-0"

| REVISION NO. | DATE | REVISIONS | BY |
|---|---|---|---|

ATHER R. DAR
LICENSED PROFESSIONAL ENGINEER
No. 7808-S
HAWAII U.S.A.

Exp. Date: 4-30-20

THIS WORK WAS PREPARED BY ME OR UNDER MY SUPERVISION AND CONSTRUCTION OF THIS PROJECT WILL BE UNDER MY OBSERVATION

DEPARTMENT OF HAWAIIAN HOMELAND

NANAKULI FLOOD CONTROL
CHANNEL IMPROVEMENTS
NANAKULI VALLEY, OAHU HAWAII

CHANNEL SEGMENT [032] REPAIR DETAILS

| | |
|---|---|
| DESIGNED BY: | TTP |
| DRAWN BY: | AK, AP, DL |
| CHECKED BY: | AD |
| SUPV: | |
| DATE: | 03/05/2019 |


HAWAII ENGINEERING GROUP, Inc.
Civil & Structural Engineers
1088 BISHOP STREET #2506
HONOLULU, HI 96813
Tel: 808-533-2092


JOB NO.

SHEET C032
39 OF 225 SHTS

FILE ___ DRAWER ___ ___ FOLDER ___ ___

Plot date: 15-Apr-2020

Full Size Plot

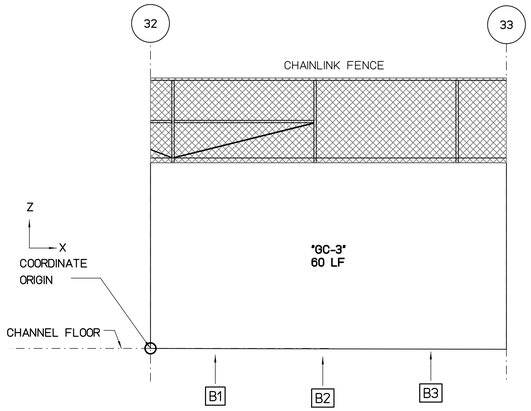


WALL "B" FLATTEN VIEW

SCALE : 3/16" = 1'-0"

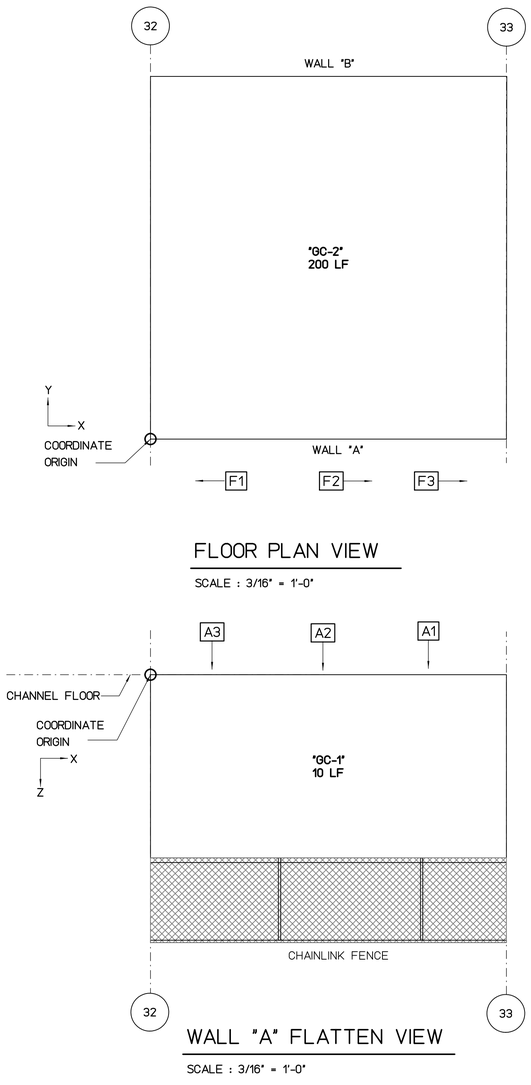


FLOOR PLAN VIEW

SCALE : 3/16" = 1'-0"




WALL "A" FLATTEN VIEW

SCALE : 3/16" = 1'-0"

REPAIR LEGEND AND NOTES:

- 2 — CRACK AND SPALL REPAIR TYPES, SEE SHEETS SR201 AND SR202 FOR DETAILS. TYPE [*] INDICATES NO-REPAIR
- (A) — CHAINLINK FENCE REPAIR TYPES, SEE SHEETS SF201 AND SF202 FOR DETAILS
- 1.0 — TOP OF WALL LEANING DISTANCE TOWARD CHANNEL IN INCHES, SEE SHEETS SL101 TO SL207 FOR CONCRETE LINING

PHOTO LEGEND:

- A1 — WALL "A" ELEVATION PHOTO IDENTIFICATION SEE FLATTEN VIEW FOR PHOTO LOCATION
- B1 — WALL "B" ELEVATION PHOTO IDENTIFICATION SEE FLATTEN VIEW FOR PHOTO LOCATION
- F1 — CHANNEL FLOOR PHOTO IDENTIFICATION SEE FLOOR PLAN VIEW FOR PHOTO LOCATION

B1



B2



B3



F1



F2



F3



A1



A2



A3



SPALL REPAIR CHART

| MARK | LOCATION | REPAIR TYPE | SPALL DIMENSION | | | SPALL VOLUME | SPALL CENTER COORDINATE | | RATING |
|---|---|---|---|---|---|---|---|---|---|
| | | | L | W | D | | X | Y OR Z | |
| | | | | | | | | | |
| | | | | | | | | | |
| | | | | | | | | | |
| | | | | | | | | | |
| | | | | | | | | | |
| | | | | | | | | | |
| | | | | | | | | | |
| | | | | | | | | | |

CHAINLINK FENCE REPAIR CHART

| MARK | LOCATION | REPAIR TYPE | POSTS | TOP RAIL | BOTTOM WIRE | BRACE | FABRIC |
|---|---|---|---|---|---|---|---|
| | | | | | | | |
| | | | | | | | |
| | | | | | | | |
| | | | | | | | |
| | | | | | | | |
| | | | | | | | |
| | | | | | | | |
| | | | | | | | |

NOT IN CONTRACT

CRACK REPAIR CHART

| MARK | LOCATION | REPAIR TYPE | GENERAL CRACKS (LF) | MAJOR CRACKS | | | | | | RATING |
|---|---|---|---|---|---|---|---|---|---|---|
| | | | | WIDTH (IN) | LENGTH (FT) | START PNT X | START PNT Y,Z | END PNT X | END PNT Y,Z | |
| "GC-1" | WALL "A" | [*] | 10 | - | - | - | - | - | - | 8 |
| "GC-2" | FLOOR | [*] | 200 | - | - | - | - | - | - | 8 |
| "GC-3" | WALL "B" | [*] | 60 | - | - | - | - | - | - | 8 |
| | | | | | | | | | | |
| | | | | | | | | | | |
| | | | | | | | | | | |
| | | | | | | | | | | |

GRAPHIC SCALES:

0 1' 2' 4' 8' 12' 16'

3/16"=1'-0"

| REVISION NO. | DATE | REVISIONS | BY |
|---|---|---|---|
| | | | |

ATHER R. DAR
LICENSED PROFESSIONAL ENGINEER
No. 7808-S
HAWAII U.S.A.

Exp. Date: 4-30-20

THIS WORK WAS PREPARED BY ME OR UNDER MY SUPERVISION AND CONSTRUCTION OF THIS PROJECT WILL BE UNDER MY OBSERVATION

DEPARTMENT OF HAWAIIAN HOMELAND

# NANAKULI FLOOD CONTROL CHANNEL IMPROVEMENTS NANAKULI VALLEY, OAHU HAWAII

## CHANNEL SEGMENT 033 REPAIR DETAILS

| | |
|---|---|
| DESIGNED BY: | TTP |
| DRAWN BY: | AK, AP, DL |
| CHECKED BY: | AD |
| SUPV: | |
| DATE: | 03/05/2019 |


HAWAII ENGINEERING GROUP, Inc.
Civil & Structural Engineers
1088 BISHOP STREET #2506
HONOLULU, HI 96813
Tel: 808-533-2092


JOB NO.

SHEET C033

40 OF 225 SHTS

FILE ___ DRAWER ___ ___ FOLDER ___ ___

Plot date: 15-Apr-2020

Full Size Plot

Plot date: 15-Apr-2020
Full Size Plot

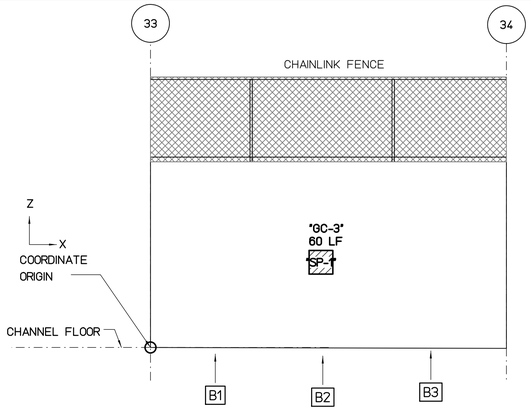


## WALL "B" FLATTEN VIEW

SCALE : 3/16" = 1'-0"

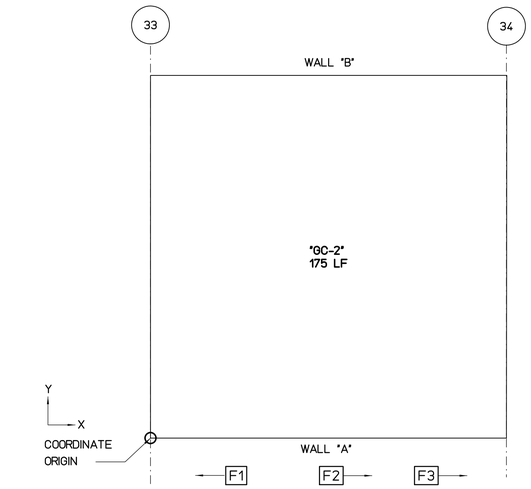


## FLOOR PLAN VIEW

SCALE : 3/16" = 1'-0"

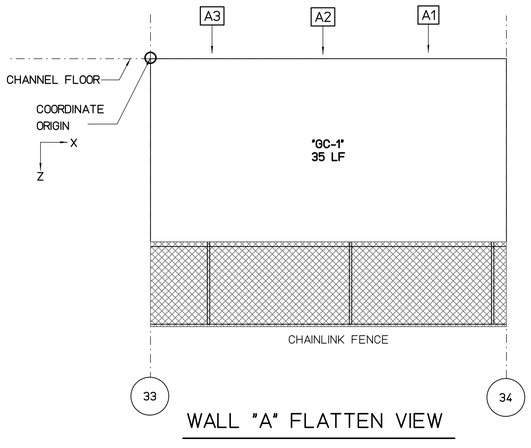


## WALL "A" FLATTEN VIEW

SCALE : 3/16" = 1'-0"

REPAIR LEGEND AND NOTES:

- 2 — CRACK AND SPALL REPAIR TYPES, SEE SHEETS SR201 AND SR202 FOR DETAILS. TYPE [*] INDICATES NO-REPAIR
- (A) — CHAINLINK FENCE REPAIR TYPES, SEE SHEETS SF201 AND SF202 FOR DETAILS
- 1.0 — TOP OF WALL LEANING DISTANCE TOWARD CHANNEL IN INCHES, SEE SHEETS SL101 TO SL207 FOR CONCRETE LINING

PHOTO LEGEND:

- A1 — WALL "A" ELEVATION PHOTO IDENTIFICATION SEE FLATTEN VIEW FOR PHOTO LOCATION
- B1 — WALL "B" ELEVATION PHOTO IDENTIFICATION SEE FLATTEN VIEW FOR PHOTO LOCATION
- F1 — CHANNEL FLOOR PHOTO IDENTIFICATION SEE FLOOR PLAN VIEW FOR PHOTO LOCATION

B1



B2



B3



F1



F2



F3



A1



A2



A3



### SPALL REPAIR CHART

| MARK | LOCATION | REPAIR TYPE | SPALL DIMENSION L | SPALL DIMENSION W | SPALL DIMENSION D | SPALL VOLUME | SPALL CENTER COORDINATE X | SPALL CENTER COORDINATE Y OR Z | RATING |
|---|---|---|---|---|---|---|---|---|---|
| "SP-1" | WALL "B" | 3 | 20 | 20 | 2 | 800 | 12 | 6 | 7 |

### CHAINLINK FENCE REPAIR CHART

| MARK | LOCATION | REPAIR TYPE | POSTS | TOP RAIL | BOTTOM WIRE | BRACE | FABRIC |
|---|---|---|---|---|---|---|---|

NOT IN CONTRACT

### CRACK REPAIR CHART

| MARK | LOCATION | REPAIR TYPE | GENERAL CRACKS (LF) | MAJOR CRACKS WIDTH (IN) | MAJOR CRACKS LENGTH (FT) | MAJOR CRACKS START PNT X | MAJOR CRACKS START PNT Y,Z | MAJOR CRACKS END PNT X | MAJOR CRACKS END PNT Y,Z | RATING |
|---|---|---|---|---|---|---|---|---|---|---|
| "GC-1" | WALL "A" | * | 35 | - | - | - | - | - | - | 8 |
| "GC-2" | FLOOR | * | 175 | - | - | - | - | - | - | 8 |
| "GC-3" | WALL "B" | * | 60 | - | - | - | - | - | - | 8 |

GRAPHIC SCALES:

0 1' 2' 4' 8' 12' 16'

3/16"=1'-0"

| REVISION NO. | DATE | REVISIONS | BY |
|---|---|---|---|

ATHER R. DAR
LICENSED PROFESSIONAL ENGINEER
No. 7808-S
HAWAII U.S.A.

Exp. Date: 4-30-20

THIS WORK WAS PREPARED BY ME OR UNDER MY SUPERVISION AND CONSTRUCTION OF THIS PROJECT WILL BE UNDER MY OBSERVATION

DEPARTMENT OF HAWAIIAN HOMELAND

# NANAKULI FLOOD CONTROL CHANNEL IMPROVEMENTS NANAKULI VALLEY, OAHU HAWAII

CHANNEL SEGMENT 034 REPAIR DETAILS

| | |
|---|---|
| DESIGNED BY: | TTP |
| DRAWN BY: | AK, AP, DL |
| CHECKED BY: | AD |
| SUPV: | |
| DATE: | 03/05/2019 |

HAWAII ENGINEERING GROUP, Inc.
Civil & Structural Engineers
1088 BISHOP STREET #2506
HONOLULU, HI 96813
Tel: 808-533-2092

JOB NO.

SHEET C034
41 OF 225 SHTS

FILE ___ DRAWER ___ ___ FOLDER ___ ___

Plot date: 15-Apr-2020
Full Size Plot

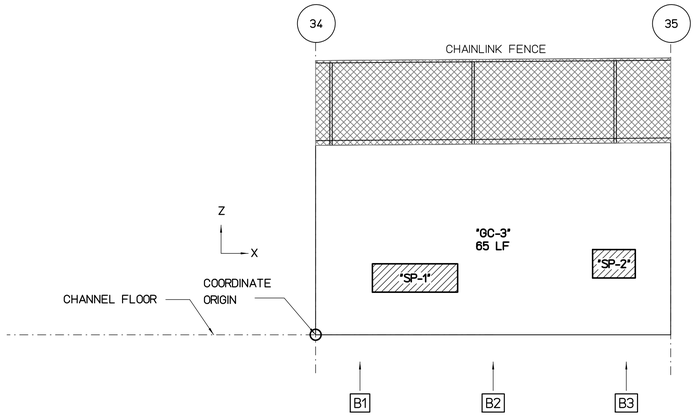


## WALL "B" FLATTEN VIEW

SCALE : 3/16" = 1'-0"

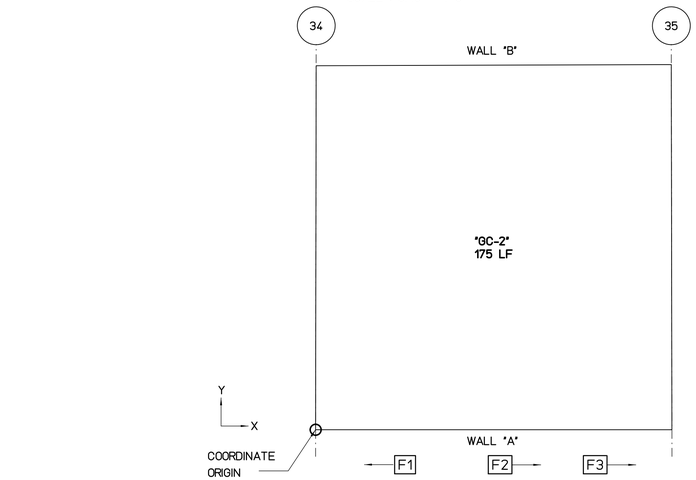


## FLOOR PLAN VIEW

SCALE : 3/16" = 1'-0"

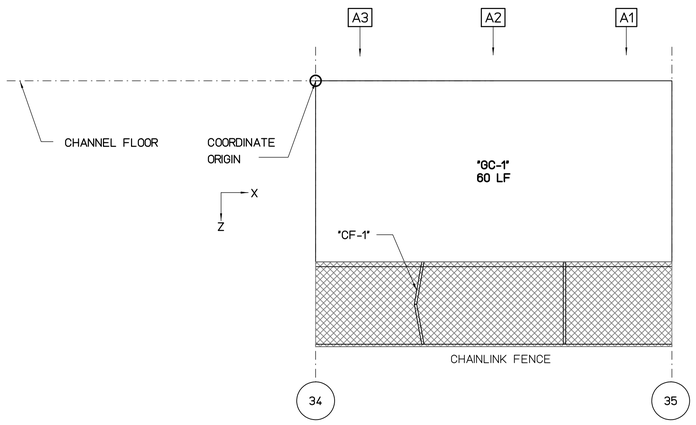


## WALL "A" FLATTEN VIEW

SCALE : 3/16" = 1'-0"

REPAIR LEGEND AND NOTES:

- [2] CRACK AND SPALL REPAIR TYPES, SEE SHEETS SR201 AND SR202 FOR DETAILS. TYPE [*] INDICATES NO-REPAIR
- (A) CHAINLINK FENCE REPAIR TYPES, SEE SHEETS SF201 AND SF202 FOR DETAILS
- [1.0] TOP OF WALL LEANING DISTANCE TOWARD CHANNEL IN INCHES, SEE SHEETS SL101 TO SL207 FOR CONCRETE LINING

PHOTO LEGEND:

- [A1] WALL "A" ELEVATION PHOTO IDENTIFICATION SEE FLATTEN VIEW FOR PHOTO LOCATION
- [B1] WALL "B" ELEVATION PHOTO IDENTIFICATION SEE FLATTEN VIEW FOR PHOTO LOCATION
- [F1] CHANNEL FLOOR PHOTO IDENTIFICATION SEE FLOOR PLAN VIEW FOR PHOTO LOCATION

B1



B2



B3



F1



F2



F3



A1



A2



A3



### SPALL REPAIR CHART

| MARK | LOCATION | REPAIR TYPE | SPALL DIMENSION | | | SPALL VOLUME | SPALL CENTER COORDINATE | | RATING |
|---|---|---|---|---|---|---|---|---|---|
| | | | L | W | D | | X | Y OR Z | |
| "SP-1" | WALL "B" | 3 | 72 | 24 | 2 | 3456 | 7 | 4 | 7 |
| "SP-2" | WALL "B" | 3 | 36 | 24 | 2 | 1728 | 21 | 5 | 7 |

### CHAINLINK FENCE REPAIR CHART

| MARK | LOCATION | REPAIR TYPE | POSTS | TOP RAIL | BOTTOM WIRE | BRACE | FABRIC |
|---|---|---|---|---|---|---|---|
| "CF-1" | WALL "A" | A | BENT 1 | - | - | - | - |

NOT IN CONTRACT

### CRACK REPAIR CHART

| MARK | LOCATION | REPAIR TYPE | GENERAL CRACKS (LF) | MAJOR CRACKS | | | | | | RATING |
|---|---|---|---|---|---|---|---|---|---|---|
| | | | | WIDTH (IN) | LENGTH (FT) | START PNT X | START PNT Y,Z | END PNT X | END PNT Y,Z | |
| "GC-1" | WALL "A" | * | 60 | - | - | - | - | - | - | 8 |
| "GC-2" | FLOOR | * | 175 | - | - | - | - | - | - | 8 |
| "GC-3" | WALL "B" | * | 65 | - | - | - | - | - | - | 8 |

GRAPHIC SCALES:

0 1' 2' 4' 8' 12' 16'

3/16"=1'-0"

| REVISION NO. | DATE | REVISIONS | BY |
|---|---|---|---|

ATHER R. DAR
LICENSED PROFESSIONAL ENGINEER
No. 7808-S
HAWAII U.S.A.

Exp. Date: 4-30-20

THIS WORK WAS PREPARED BY ME OR UNDER MY SUPERVISION AND CONSTRUCTION OF THIS PROJECT WILL BE UNDER MY OBSERVATION

DEPARTMENT OF HAWAIIAN HOMELAND

# NANAKULI FLOOD CONTROL CHANNEL IMPROVEMENTS NANAKULI VALLEY, OAHU HAWAII

CHANNEL SEGMENT [035] REPAIR DETAILS

| | |
|---|---|
| DESIGNED BY: | TTP |
| DRAWN BY: | AK, AP, DL |
| CHECKED BY: | AD |
| SUPV: | |
| DATE: | 03/05/2019 |

HAWAII ENGINEERING GROUP, Inc.
Civil & Structural Engineers
1088 BISHOP STREET #2506
HONOLULU, HI 96813
Tel: 808-533-2092

JOB NO.

SHEET C035
42 OF 225 SHTS

FILE ___ DRAWER ___ ___ FOLDER ___ ___

Plot date: 15-Apr-2020
Full Size Plot

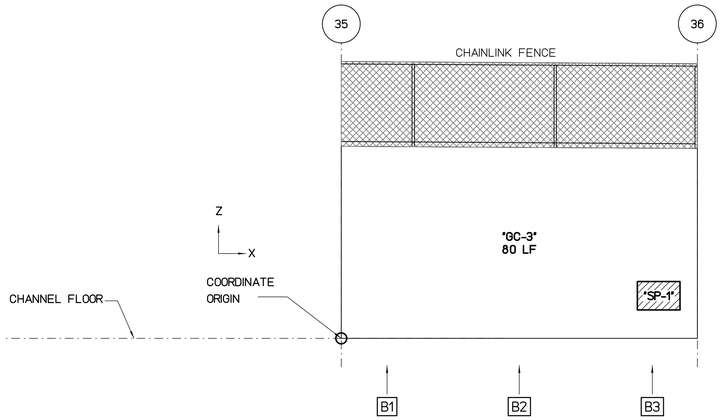


WALL "B" FLATTEN VIEW

SCALE : 3/16" = 1'-0"

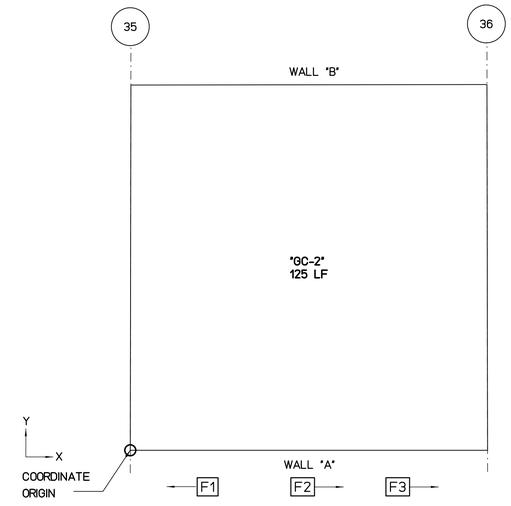


FLOOR PLAN VIEW

SCALE : 3/16" = 1'-0"

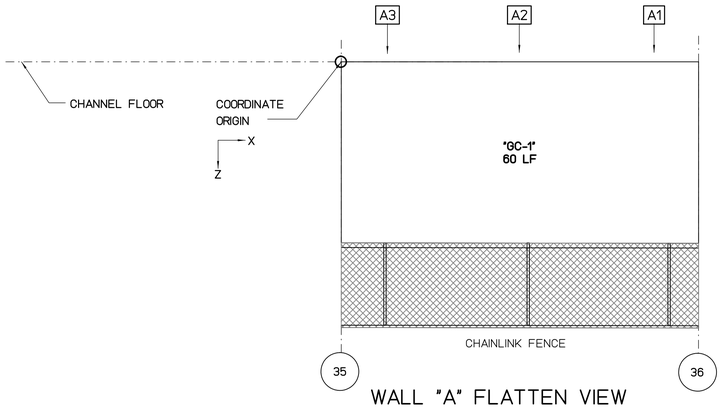


WALL "A" FLATTEN VIEW

SCALE : 3/16" = 1'-0"

REPAIR LEGEND AND NOTES:

- 2 — CRACK AND SPALL REPAIR TYPES, SEE SHEETS SR201 AND SR202 FOR DETAILS. TYPE [*] INDICATES NO-REPAIR
- (A) — CHAINLINK FENCE REPAIR TYPES, SEE SHEETS SF201 AND SF202 FOR DETAILS
- 1.0 — TOP OF WALL LEANING DISTANCE TOWARD CHANNEL IN INCHES, SEE SHEETS SL101 TO SL207 FOR CONCRETE LINING

PHOTO LEGEND:

- A1 — WALL "A" ELEVATION PHOTO IDENTIFICATION SEE FLATTEN VIEW FOR PHOTO LOCATION
- B1 — WALL "B" ELEVATION PHOTO IDENTIFICATION SEE FLATTEN VIEW FOR PHOTO LOCATION
- F1 — CHANNEL FLOOR PHOTO IDENTIFICATION SEE FLOOR PLAN VIEW FOR PHOTO LOCATION

B1



B2



B3



F1



F2



F3



A1



A2



A3



SPALL REPAIR CHART

| MARK | LOCATION | REPAIR TYPE | SPALL DIMENSION L | SPALL DIMENSION W | SPALL DIMENSION D | SPALL VOLUME | SPALL CENTER COORDINATE X | SPALL CENTER COORDINATE Y OR Z | RATING |
|---|---|---|---|---|---|---|---|---|---|
| "SP-1" | WALL "B" | 3 | 36 | 24 | 2 | 1728 | 24 | 3 | 7 |

CHAINLINK FENCE REPAIR CHART

| MARK | LOCATION | REPAIR TYPE | POSTS | TOP RAIL | BOTTOM WIRE | BRACE | FABRIC |
|---|---|---|---|---|---|---|---|

NOT IN CONTRACT

CRACK REPAIR CHART

| MARK | LOCATION | REPAIR TYPE | GENERAL CRACKS (LF) | MAJOR CRACKS WIDTH (IN) | MAJOR CRACKS LENGTH (FT) | MAJOR CRACKS START PNT X | MAJOR CRACKS START PNT Y,Z | MAJOR CRACKS END PNT X | MAJOR CRACKS END PNT Y,Z | RATING |
|---|---|---|---|---|---|---|---|---|---|---|
| "GC-1" | WALL "A" | * | 60 | - | - | - | - | - | - | 8 |
| "GC-2" | FLOOR | * | 125 | - | - | - | - | - | - | 8 |
| "GC-3" | WALL "B" | * | 80 | - | - | - | - | - | - | 8 |

GRAPHIC SCALES:

0 1' 2' 4' 8' 12' 16'

3/16"=1'-0"

| REVISION NO. | DATE | REVISIONS | BY |
|---|---|---|---|

ATHER R. DAR
LICENSED PROFESSIONAL ENGINEER
No. 7808-S
HAWAII U.S.A.

Exp. Date: 4-30-20

THIS WORK WAS PREPARED BY ME OR UNDER MY SUPERVISION AND CONSTRUCTION OF THIS PROJECT WILL BE UNDER MY OBSERVATION

DEPARTMENT OF HAWAIIAN HOMELAND

NANAKULI FLOOD CONTROL
CHANNEL IMPROVEMENTS
NANAKULI VALLEY, OAHU HAWAII

CHANNEL SEGMENT 036 REPAIR DETAILS

| | |
|---|---|
| DESIGNED BY: | TTP |
| DRAWN BY: | AK, AP, DL |
| CHECKED BY: | AD |
| SUPV: | |
| DATE: | 03/05/2019 |

HAWAII ENGINEERING GROUP, Inc.
Civil & Structural Engineers
1088 BISHOP STREET #2506
HONOLULU, HI 96813
Tel: 808-533-2092

JOB NO.

SHEET C036
33 OF 225 SHTS

FILE ___ DRAWER ___ ___ FOLDER ___ ___

Plot date: 15-Apr-2020
Full Size Plot

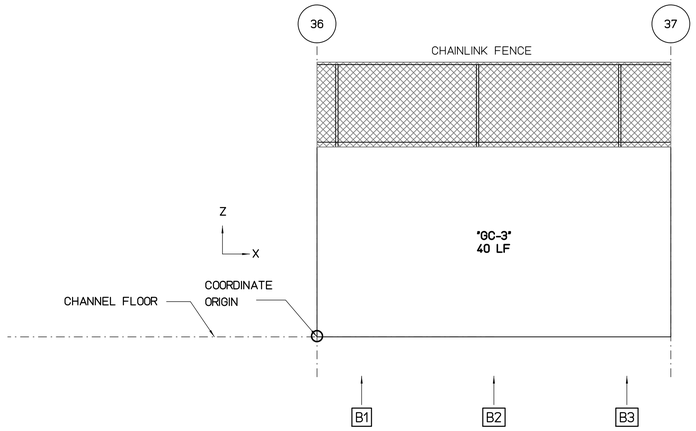


## WALL "B" FLATTEN VIEW

SCALE : 3/16" = 1'-0"

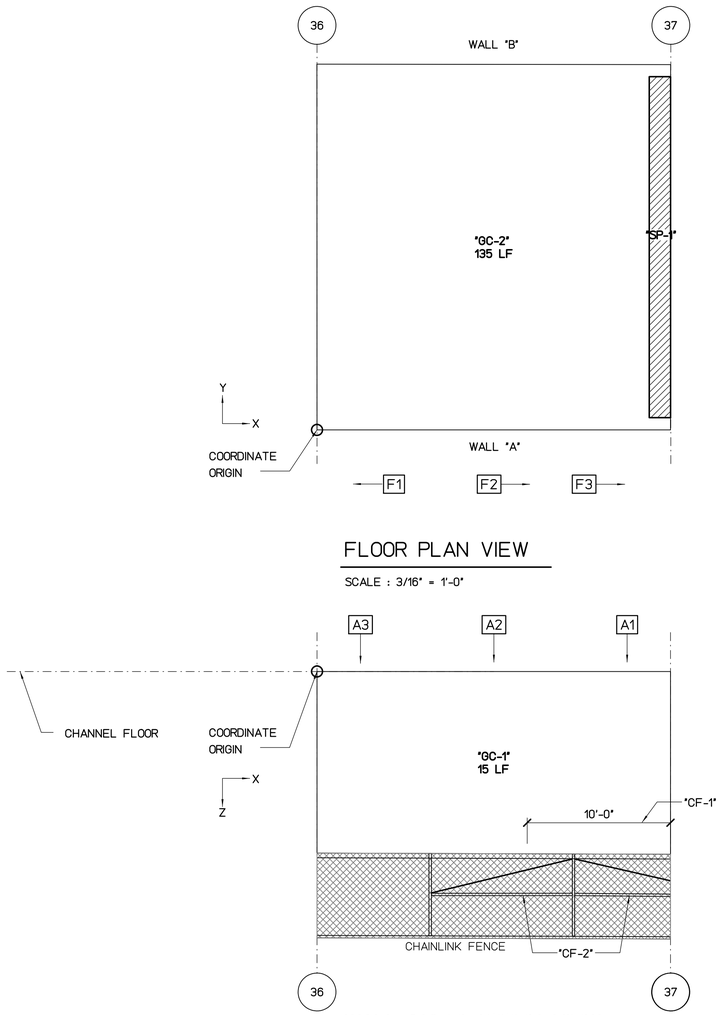


## FLOOR PLAN VIEW

SCALE : 3/16" = 1'-0"




## WALL "A" FLATTEN VIEW

SCALE : 3/16" = 1'-0"

REPAIR LEGEND AND NOTES:

- 2 — CRACK AND SPALL REPAIR TYPES, SEE SHEETS SR201 AND SR202 FOR DETAILS. TYPE [*] INDICATES NO-REPAIR
- (A) — CHAINLINK FENCE REPAIR TYPES, SEE SHEETS SF201 AND SF202 FOR DETAILS
- 1.0 — TOP OF WALL LEANING DISTANCE TOWARD CHANNEL IN INCHES, SEE SHEETS SL101 TO SL207 FOR CONCRETE LINING

PHOTO LEGEND:

- A1 — WALL "A" ELEVATION PHOTO IDENTIFICATION SEE FLATTEN VIEW FOR PHOTO LOCATION
- B1 — WALL "B" ELEVATION PHOTO IDENTIFICATION SEE FLATTEN VIEW FOR PHOTO LOCATION
- F1 — CHANNEL FLOOR PHOTO IDENTIFICATION SEE FLOOR PLAN VIEW FOR PHOTO LOCATION

B1



B2



B3



F1



F2



F3



A1



A2



A3



### SPALL REPAIR CHART

| MARK | LOCATION | REPAIR TYPE | SPALL DIMENSION L | SPALL DIMENSION W | SPALL DIMENSION D | SPALL VOLUME | SPALL CENTER COORDINATE X | SPALL CENTER COORDINATE Y OR Z | RATING |
|---|---|---|---|---|---|---|---|---|---|
| "SP-1" | FLOOR | 3 | 288 | 18 | 3 | 15552 | 24 | 12 | 7 |

### CHAINLINK FENCE REPAIR CHART

| MARK | LOCATION | REPAIR TYPE | POSTS | TOP RAIL | BOTTOM WIRE | BRACE | FABRIC |
|---|---|---|---|---|---|---|---|
| "CF-1" | WALL "A" | E | - | - | - | - | DAMAGED 10'x6' |
| "CF-2" | WALL "A" | B | - | - | - | DAMAGED 2 | |

NOT IN CONTRACT

### CRACK REPAIR CHART

| MARK | LOCATION | REPAIR TYPE | GENERAL CRACKS (LF) | MAJOR CRACKS WIDTH (IN) | MAJOR CRACKS LENGTH (FT) | MAJOR CRACKS START PNT X | MAJOR CRACKS START PNT Y,Z | MAJOR CRACKS END PNT X | MAJOR CRACKS END PNT Y,Z | RATING |
|---|---|---|---|---|---|---|---|---|---|---|
| "GC-1" | WALL "A" | * | 15 | - | - | - | - | - | - | 8 |
| "GC-2" | FLOOR | * | 135 | - | - | - | - | - | - | 8 |
| "GC-3" | WALL "B" | * | 40 | - | - | - | - | - | - | 8 |

GRAPHIC SCALES:

0 1' 2' 4' 8' 12' 16'

3/16"=1'-0"

| REVISION NO. | DATE | REVISIONS | BY |
|---|---|---|---|

ARTHUR R. DAR — LICENSED PROFESSIONAL ENGINEER — No. 7808-S — HAWAII U.S.A.

Exp. Date: 4-30-20

THIS WORK WAS PREPARED BY ME OR UNDER MY SUPERVISION AND CONSTRUCTION OF THIS PROJECT WILL BE UNDER MY OBSERVATION

DEPARTMENT OF HAWAIIAN HOMELAND

NANAKULI FLOOD CONTROL CHANNEL IMPROVEMENTS NANAKULI VALLEY, OAHU HAWAII

CHANNEL SEGMENT 037 REPAIR DETAILS

| | |
|---|---|
| DESIGNED BY: | TTP |
| DRAWN BY: | AK, AP, DL |
| CHECKED BY: | AD |
| SUPV: | |
| DATE: | 03/05/2019 |

HAWAII ENGINEERING GROUP, Inc. — Civil & Structural Engineers
1088 BISHOP STREET #2506
HONOLULU, HI 96813
Tel: 808-533-2092

JOB NO.

SHEET C037
44 OF 225 SHTS

FILE ___ DRAWER ___ ___ FOLDER ___ ___

Plot date: 15-Apr-2020
Full Size Plot

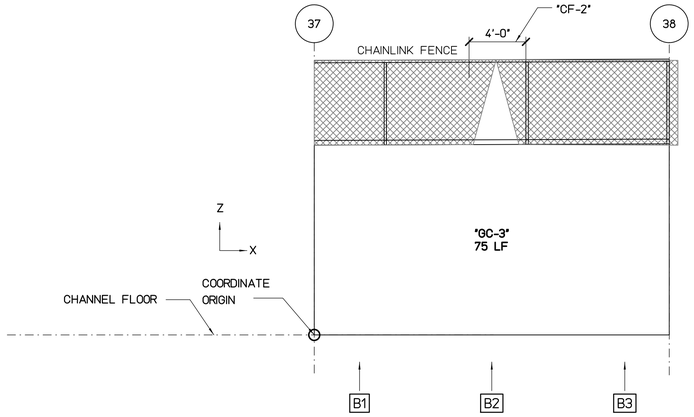


## WALL "B" FLATTEN VIEW

SCALE : 3/16" = 1'-0"

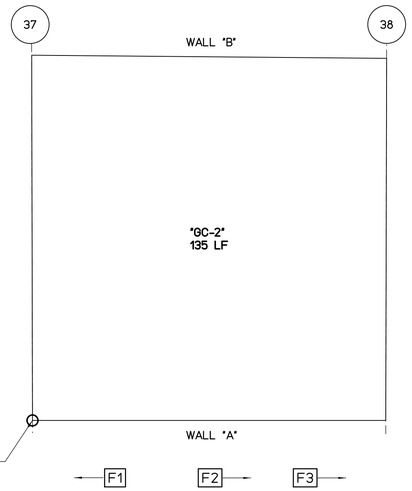


## FLOOR PLAN VIEW

SCALE : 3/16" = 1'-0"

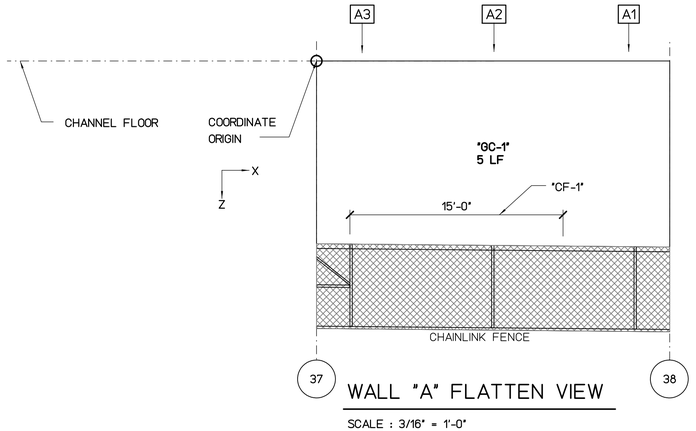


## WALL "A" FLATTEN VIEW

SCALE : 3/16" = 1'-0"

REPAIR LEGEND AND NOTES:

- 2 — CRACK AND SPALL REPAIR TYPES, SEE SHEETS SR201 AND SR202 FOR DETAILS. TYPE [*] INDICATES NO-REPAIR
- (A) — CHAINLINK FENCE REPAIR TYPES, SEE SHEETS SF201 AND SF202 FOR DETAILS
- 1.0 — TOP OF WALL LEANING DISTANCE TOWARD CHANNEL IN INCHES, SEE SHEETS SL101 TO SL207 FOR CONCRETE LINING

PHOTO LEGEND:

- A1 — WALL "A" ELEVATION PHOTO IDENTIFICATION SEE FLATTEN VIEW FOR PHOTO LOCATION
- B1 — WALL "B" ELEVATION PHOTO IDENTIFICATION SEE FLATTEN VIEW FOR PHOTO LOCATION
- F1 — CHANNEL FLOOR PHOTO IDENTIFICATION SEE FLOOR PLAN VIEW FOR PHOTO LOCATION

B1



B2



B3



F1



F2



F3



A1



A2



A3



### SPALL REPAIR CHART

| MARK | LOCATION | REPAIR TYPE | SPALL DIMENSION L | SPALL DIMENSION W | SPALL DIMENSION D | SPALL VOLUME | SPALL CENTER COORDINATE X | SPALL CENTER COORDINATE Y OR Z | RATING |
|---|---|---|---|---|---|---|---|---|---|
| | | | | | | | | | |
| | | | | | | | | | |
| | | | | | | | | | |
| | | | | | | | | | |
| | | | | | | | | | |
| | | | | | | | | | |
| | | | | | | | | | |
| | | | | | | | | | |

### CHAINLINK FENCE REPAIR CHART

| MARK | LOCATION | REPAIR TYPE | POSTS | TOP RAIL | BOTTOM WIRE | BRACE | FABRIC |
|---|---|---|---|---|---|---|---|
| "CF-1" | WALL "A" | (E) | - | - | - | - | DAMAGED 15'x6' |
| "CF-2" | WALL "B" | (E) | - | - | - | - | DAMAGED 4'x6' |
| | | | | | | | |
| | | | | | | | |
| | | | | | | | |
| | | | | | | | |
| | | | | | | | |
| | | | | | | | |
| | | | | | | | |

NOT IN CONTRACT

### CRACK REPAIR CHART

| MARK | LOCATION | REPAIR TYPE | GENERAL CRACKS (LF) | MAJOR CRACKS WIDTH (IN) | MAJOR CRACKS LENGTH (FT) | MAJOR CRACKS START PNT X | MAJOR CRACKS START PNT Y,Z | MAJOR CRACKS END PNT X | MAJOR CRACKS END PNT Y,Z | RATING |
|---|---|---|---|---|---|---|---|---|---|---|
| "GC-1" | WALL "A" | [*] | 5 | - | - | - | - | - | - | 9 |
| "GC-2" | FLOOR | [*] | 135 | - | - | - | - | - | - | 8 |
| "GC-3" | WALL "B" | [*] | 75 | - | - | - | - | - | - | 8 |
| | | | | | | | | | | |
| | | | | | | | | | | |
| | | | | | | | | | | |
| | | | | | | | | | | |

GRAPHIC SCALES:

0 1' 2' 4' 8' 12' 16'

3/16"=1'-0"

| REVISION NO. | DATE | REVISIONS | BY |
|---|---|---|---|
| | | | |

ATHER R. DAR
LICENSED PROFESSIONAL ENGINEER
No. 7808-S
HAWAII U.S.A.

Exp. Date: 4-30-20

THIS WORK WAS PREPARED BY ME OR UNDER MY SUPERVISION AND CONSTRUCTION OF THIS PROJECT WILL BE UNDER MY OBSERVATION

DEPARTMENT OF HAWAIIAN HOMELAND

NANAKULI FLOOD CONTROL
CHANNEL IMPROVEMENTS
NANAKULI VALLEY, OAHU HAWAII

CHANNEL SEGMENT 038 REPAIR DETAILS

| | |
|---|---|
| DESIGNED BY: | TTP |
| DRAWN BY: | AK, AP, DL |
| CHECKED BY: | AD |
| SUPV: | |
| DATE: | 03/05/2019 |

HAWAII ENGINEERING GROUP, Inc.
Civil & Structural Engineers
1088 BISHOP STREET #2506
HONOLULU, HI 96813
Tel: 808-533-2092

JOB NO.

SHEET C038
45 OF 225 SHTS

FILE ___ DRAWER ___ ___ FOLDER ___ ___

Plot date: 15-Apr-2020
Full Size Plot

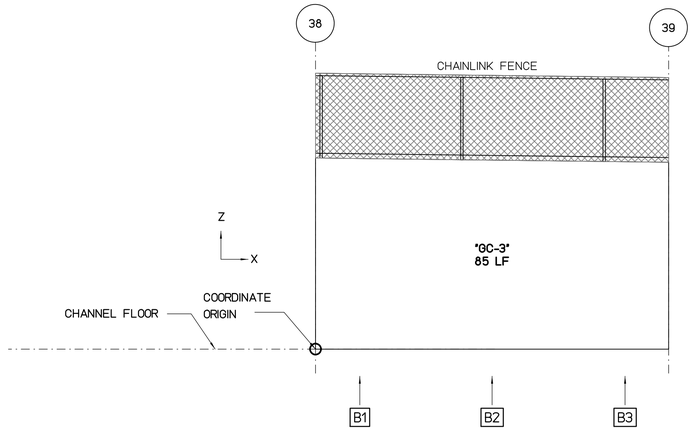


## WALL "B" FLATTEN VIEW

SCALE : 3/16" = 1'-0"

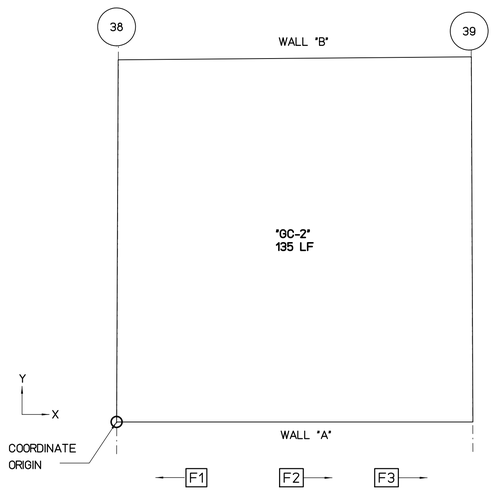


## FLOOR PLAN VIEW

SCALE : 3/16" = 1'-0"

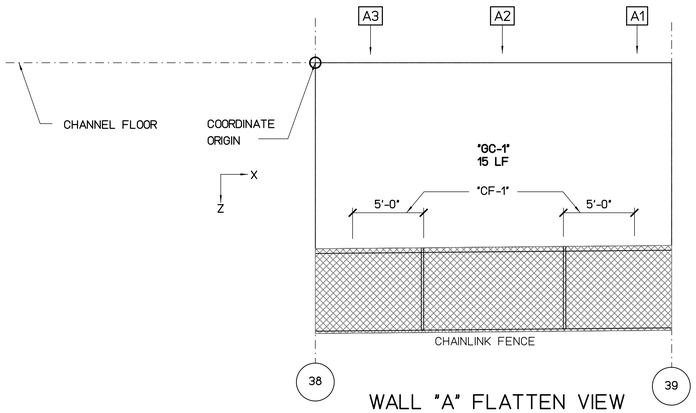


## WALL "A" FLATTEN VIEW

SCALE : 3/16" = 1'-0"

REPAIR LEGEND AND NOTES:

- 2 — CRACK AND SPALL REPAIR TYPES, SEE SHEETS SR201 AND SR202 FOR DETAILS. TYPE [*] INDICATES NO-REPAIR
- (A) — CHAINLINK FENCE REPAIR TYPES, SEE SHEETS SF201 AND SF202 FOR DETAILS
- 1.0 — TOP OF WALL LEANING DISTANCE TOWARD CHANNEL IN INCHES, SEE SHEETS SL101 TO SL207 FOR CONCRETE LINING

PHOTO LEGEND:

- A1 — WALL "A" ELEVATION PHOTO IDENTIFICATION SEE FLATTEN VIEW FOR PHOTO LOCATION
- B1 — WALL "B" ELEVATION PHOTO IDENTIFICATION SEE FLATTEN VIEW FOR PHOTO LOCATION
- F1 — CHANNEL FLOOR PHOTO IDENTIFICATION SEE FLOOR PLAN VIEW FOR PHOTO LOCATION

B1



B2



B3



F1



F2



F3



A1



A2



A3



### SPALL REPAIR CHART

| MARK | LOCATION | REPAIR TYPE | SPALL DIMENSION L | SPALL DIMENSION W | SPALL DIMENSION D | SPALL VOLUME | SPALL CENTER COORDINATE X | SPALL CENTER COORDINATE Y OR Z | RATING |
|---|---|---|---|---|---|---|---|---|---|
| | | | | | | | | | |
| | | | | | | | | | |
| | | | | | | | | | |
| | | | | | | | | | |
| | | | | | | | | | |
| | | | | | | | | | |
| | | | | | | | | | |
| | | | | | | | | | |

### CHAINLINK FENCE REPAIR CHART

| MARK | LOCATION | REPAIR TYPE | POSTS | TOP RAIL | BOTTOM WIRE | BRACE | FABRIC |
|---|---|---|---|---|---|---|---|
| "CF-1" | WALL "A" | (E) | - | - | - | - | DAMAGED 10'x6' |

NOT IN CONTRACT

### CRACK REPAIR CHART

| MARK | LOCATION | REPAIR TYPE | GENERAL CRACKS (LF) | MAJOR CRACKS WIDTH (IN) | MAJOR CRACKS LENGTH (FT) | MAJOR CRACKS START PNT X | MAJOR CRACKS START PNT Y,Z | MAJOR CRACKS END PNT X | MAJOR CRACKS END PNT Y,Z | RATING |
|---|---|---|---|---|---|---|---|---|---|---|
| "GC-1" | WALL "A" | [*] | 15 | - | - | - | - | - | - | 8 |
| "GC-2" | FLOOR | [*] | 135 | - | - | - | - | - | - | 8 |
| "GC-3" | WALL "B" | [*] | 85 | - | - | - | - | - | - | 8 |
| | | | | | | | | | | |
| | | | | | | | | | | |
| | | | | | | | | | | |
| | | | | | | | | | | |

GRAPHIC SCALES:

0 1' 2' 4' 8' 12' 16'

3/16"=1'-0"

| REVISION NO. | DATE | REVISIONS | BY |
|---|---|---|---|
| | | | |

ATHER R. DAR
LICENSED PROFESSIONAL ENGINEER
No. 7808-S
HAWAII U.S.A.
Exp. Date: 4-30-20

THIS WORK WAS PREPARED BY ME OR UNDER MY SUPERVISION AND CONSTRUCTION OF THIS PROJECT WILL BE UNDER MY OBSERVATION

DEPARTMENT OF HAWAIIAN HOMELAND

# NANAKULI FLOOD CONTROL CHANNEL IMPROVEMENTS NANAKULI VALLEY, OAHU HAWAII

## CHANNEL SEGMENT 039 REPAIR DETAILS

| | |
|---|---|
| DESIGNED BY: | TTP |
| DRAWN BY: | AK, AP, DL |
| CHECKED BY: | AD |
| SUPV: | |
| DATE: | 03/05/2019 |

HAWAII ENGINEERING GROUP, Inc.
Civil & Structural Engineers
1088 BISHOP STREET #2506
HONOLULU, HI 96813
Tel: 808-533-2092

JOB NO.

SHEET C039
46 OF 225 SHTS

FILE ___ DRAWER ___ ___ FOLDER ___ ___

Plot date: 15-Apr-2020
Full Size Plot

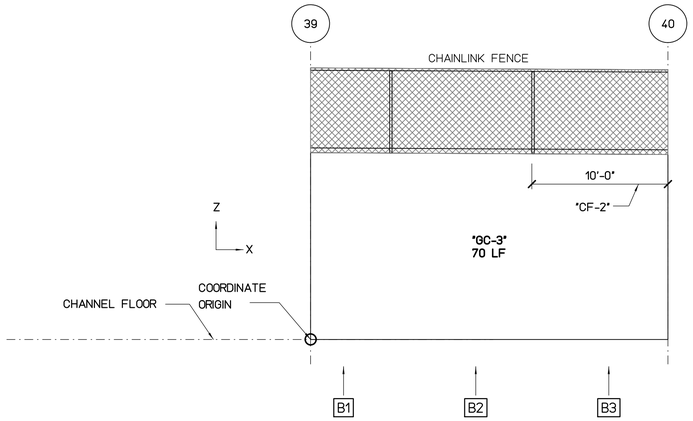


## WALL "B" FLATTEN VIEW

SCALE : 3/16" = 1'-0"

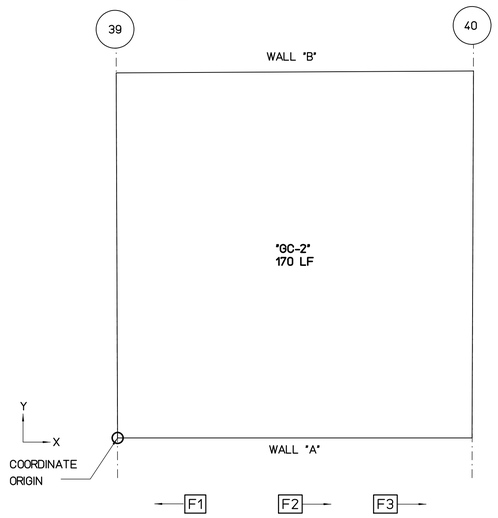


## FLOOR PLAN VIEW

SCALE : 3/16" = 1'-0"

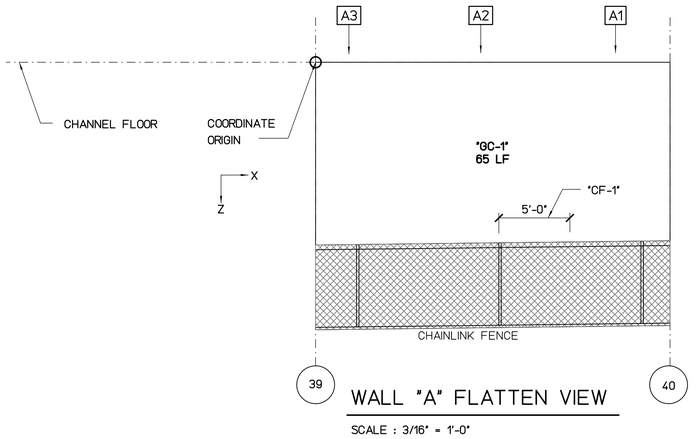


## WALL "A" FLATTEN VIEW

SCALE : 3/16" = 1'-0"

REPAIR LEGEND AND NOTES:

- 2 — CRACK AND SPALL REPAIR TYPES, SEE SHEETS SR201 AND SR202 FOR DETAILS. TYPE [*] INDICATES NO-REPAIR
- (A) — CHAINLINK FENCE REPAIR TYPES, SEE SHEETS SF201 AND SF202 FOR DETAILS
- 1.0 — TOP OF WALL LEANING DISTANCE TOWARD CHANNEL IN INCHES, SEE SHEETS SL101 TO SL207 FOR CONCRETE LINING

PHOTO LEGEND:

- A1 — WALL "A" ELEVATION PHOTO IDENTIFICATION SEE FLATTEN VIEW FOR PHOTO LOCATION
- B1 — WALL "B" ELEVATION PHOTO IDENTIFICATION SEE FLATTEN VIEW FOR PHOTO LOCATION
- F1 — CHANNEL FLOOR PHOTO IDENTIFICATION SEE FLOOR PLAN VIEW FOR PHOTO LOCATION

B1



B2



B3



F1



F2



F3



A1




A2




A3




### SPALL REPAIR CHART

| MARK | LOCATION | REPAIR TYPE | SPALL DIMENSION L | SPALL DIMENSION W | SPALL DIMENSION D | SPALL VOLUME | SPALL CENTER COORDINATE X | SPALL CENTER COORDINATE Y OR Z | RATING |
|---|---|---|---|---|---|---|---|---|---|
| | | | | | | | | | |
| | | | | | | | | | |
| | | | | | | | | | |
| | | | | | | | | | |
| | | | | | | | | | |
| | | | | | | | | | |
| | | | | | | | | | |
| | | | | | | | | | |

### CHAINLINK FENCE REPAIR CHART

| MARK | LOCATION | REPAIR TYPE | POSTS | TOP RAIL | BOTTOM WIRE | BRACE | FABRIC |
|---|---|---|---|---|---|---|---|
| "CF-1" | WALL "A" | (E) | - | - | - | - | DAMAGED 5'x6' |
| "CF-2" | WALL "B" | (E) | - | - | - | - | DAMAGED 10'x6" |
| | | | | | | | |
| | | | | | | | |
| | | | | | | | |
| | | | | | | | |
| | | | | | | | |
| | | | | | | | |
| | | | | | | | |

NOT IN CONTRACT

### CRACK REPAIR CHART

| MARK | LOCATION | REPAIR TYPE | GENERAL CRACKS (LF) | MAJOR CRACKS WIDTH (IN) | MAJOR CRACKS LENGTH (FT) | MAJOR CRACKS START PNT X | MAJOR CRACKS START PNT Y,Z | MAJOR CRACKS END PNT X | MAJOR CRACKS END PNT Y,Z | RATING |
|---|---|---|---|---|---|---|---|---|---|---|
| "GC-1" | WALL "A" | [*] | 65 | - | - | - | - | - | - | 8 |
| "GC-2" | FLOOR | [*] | 170 | - | - | - | - | - | - | 8 |
| "GC-3" | WALL "B" | [*] | 70 | - | - | - | - | - | - | 8 |
| | | | | | | | | | | |
| | | | | | | | | | | |
| | | | | | | | | | | |
| | | | | | | | | | | |

GRAPHIC SCALES:

0 1' 2' 4' 8' 12' 16'

3/16"=1'-0"

| REVISION NO. | DATE | REVISIONS | BY |
|---|---|---|---|
| | | | |

ARTHER R. DAR
LICENSED PROFESSIONAL ENGINEER
No. 7808-S
HAWAII U.S.A.

Exp. Date: 4-30-20

THIS WORK WAS PREPARED BY ME OR UNDER MY SUPERVISION AND CONSTRUCTION OF THIS PROJECT WILL BE UNDER MY OBSERVATION

DEPARTMENT OF HAWAIIAN HOMELAND

# NANAKULI FLOOD CONTROL CHANNEL IMPROVEMENTS NANAKULI VALLEY, OAHU HAWAII

CHANNEL SEGMENT 040 REPAIR DETAILS

| | |
|---|---|
| DESIGNED BY: | TTP |
| DRAWN BY: | AK, AP, DL |
| CHECKED BY: | AD |
| SUPV: | |
| DATE: | 03/05/2019 |

HAWAII ENGINEERING GROUP, Inc.
Civil & Structural Engineers
1088 BISHOP STREET #2506
HONOLULU, HI 96813
Tel: 808-533-2092

JOB NO.

SHEET C040
47 OF 225 SHTS

FILE ___ DRAWER ___ ___ FOLDER ___ ___

Plot date: 15-Apr-2020
Full Size Plot

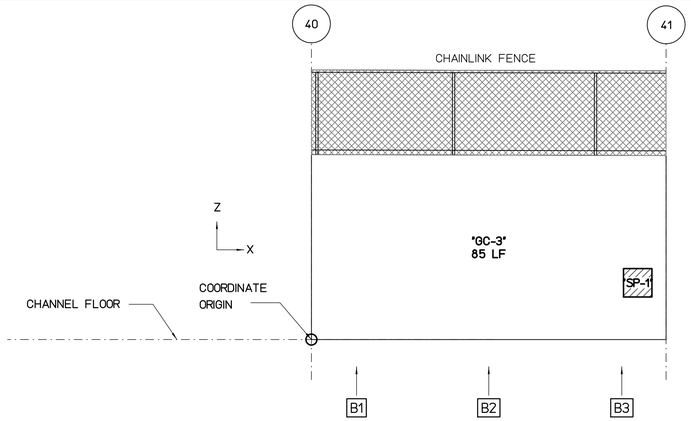


## WALL "B" FLATTEN VIEW

SCALE : 3/16" = 1'-0"

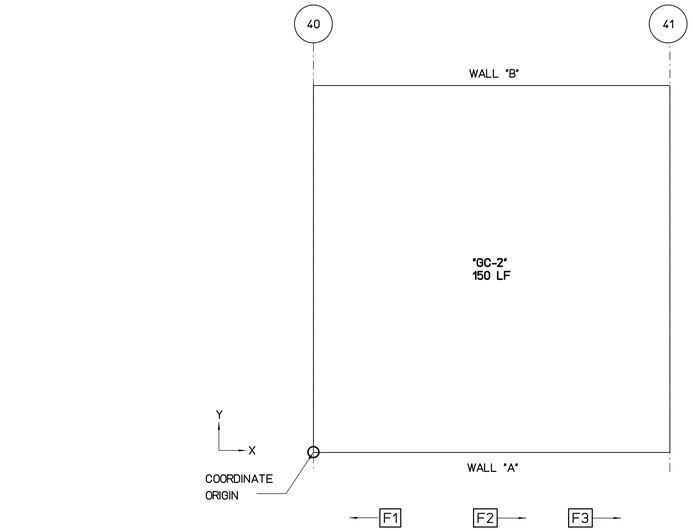


## FLOOR PLAN VIEW

SCALE : 3/16" = 1'-0"

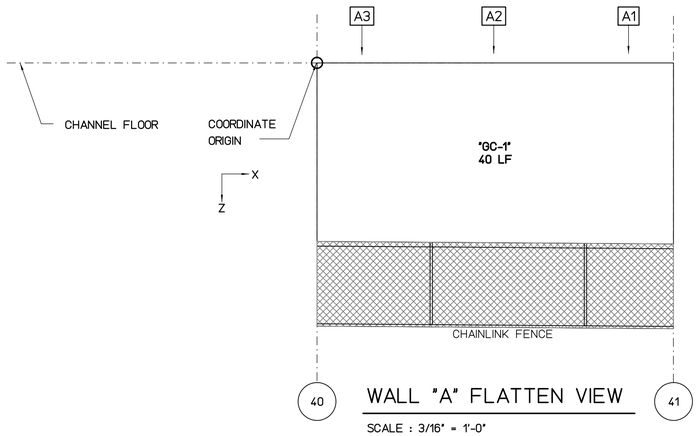


## WALL "A" FLATTEN VIEW

SCALE : 3/16" = 1'-0"

REPAIR LEGEND AND NOTES:

- 2 — CRACK AND SPALL REPAIR TYPES, SEE SHEETS SR201 AND SR202 FOR DETAILS. TYPE [*] INDICATES NO-REPAIR
- (A) — CHAINLINK FENCE REPAIR TYPES, SEE SHEETS SF201 AND SF202 FOR DETAILS
- 1.0 — TOP OF WALL LEANING DISTANCE TOWARD CHANNEL IN INCHES, SEE SHEETS SL101 TO SL207 FOR CONCRETE LINING

PHOTO LEGEND:

- A1 — WALL "A" ELEVATION PHOTO IDENTIFICATION SEE FLATTEN VIEW FOR PHOTO LOCATION
- B1 — WALL "B" ELEVATION PHOTO IDENTIFICATION SEE FLATTEN VIEW FOR PHOTO LOCATION
- F1 — CHANNEL FLOOR PHOTO IDENTIFICATION SEE FLOOR PLAN VIEW FOR PHOTO LOCATION

B1



B2



B3



F1



F2



F3



A1



A2



A3



### SPALL REPAIR CHART

| MARK | LOCATION | REPAIR TYPE | SPALL DIMENSION L | SPALL DIMENSION W | SPALL DIMENSION D | SPALL VOLUME | SPALL CENTER COORDINATE X | SPALL CENTER COORDINATE Y OR Z | RATING |
|---|---|---|---|---|---|---|---|---|---|
| "SP-1" | WALL "B" | 3 | 24 | 24 | 2 | 1152 | 23 | 4 | 7 |

### CHAINLINK FENCE REPAIR CHART

| MARK | LOCATION | REPAIR TYPE | POSTS | TOP RAIL | BOTTOM WIRE | BRACE | FABRIC |
|---|---|---|---|---|---|---|---|

NOT IN CONTRACT

### CRACK REPAIR CHART

| MARK | LOCATION | REPAIR TYPE | GENERAL CRACKS (LF) | MAJOR CRACKS WIDTH (IN) | MAJOR CRACKS LENGTH (FT) | MAJOR CRACKS START PNT X | MAJOR CRACKS START PNT Y,Z | MAJOR CRACKS END PNT X | MAJOR CRACKS END PNT Y,Z | RATING |
|---|---|---|---|---|---|---|---|---|---|---|
| "GC-1" | WALL "A" | * | 40 | - | - | - | - | - | - | 8 |
| "GC-2" | FLOOR | * | 150 | - | - | - | - | - | - | 8 |
| "GC-3" | WALL "B" | * | 85 | - | - | - | - | - | - | 8 |

GRAPHIC SCALES:

0 1' 2' 4' 8' 12' 16'

3/16"=1'-0"

| REVISION NO. | DATE | REVISIONS | BY |
|---|---|---|---|

ATHER R. DAR
LICENSED PROFESSIONAL ENGINEER
No. 7808-S
HAWAII U.S.A.
Exp. Date: 4-30-20

THIS WORK WAS PREPARED BY ME OR UNDER MY SUPERVISION AND CONSTRUCTION OF THIS PROJECT WILL BE UNDER MY OBSERVATION

DEPARTMENT OF HAWAIIAN HOMELAND

NANAKULI FLOOD CONTROL CHANNEL IMPROVEMENTS
NANAKULI VALLEY, OAHU HAWAII

CHANNEL SEGMENT 041 REPAIR DETAILS

| | |
|---|---|
| DESIGNED BY: | TTP |
| DRAWN BY: | AK, AP, DL |
| CHECKED BY: | AD |
| SUPV: | |
| DATE: | 03/05/2019 |

HAWAII ENGINEERING GROUP, Inc.
Civil & Structural Engineers
1088 BISHOP STREET #2506
HONOLULU, HI 96813
Tel: 808-533-2092

JOB NO.

SHEET C041
48 OF 225 SHTS

FILE ___ DRAWER ___ ___ FOLDER ___ ___

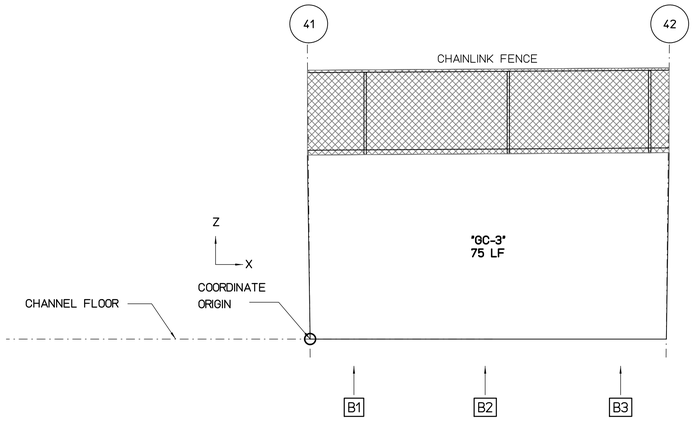


## WALL "B" FLATTEN VIEW

SCALE : 3/16" = 1'-0"

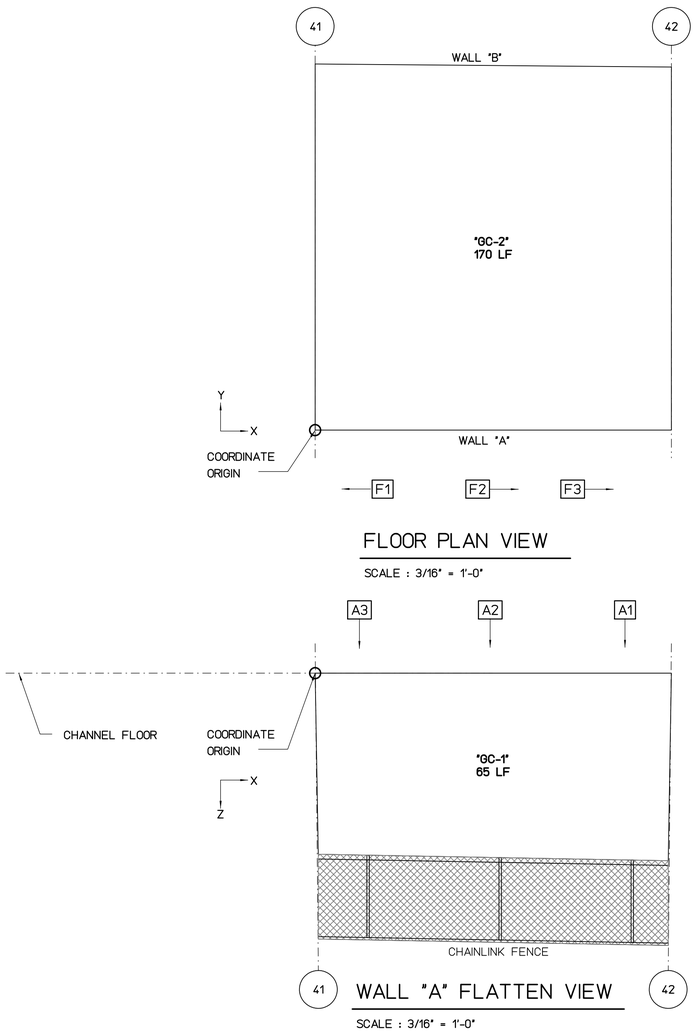


## FLOOR PLAN VIEW

SCALE : 3/16" = 1'-0"




## WALL "A" FLATTEN VIEW

SCALE : 3/16" = 1'-0"

REPAIR LEGEND AND NOTES:

- 2 — CRACK AND SPALL REPAIR TYPES, SEE SHEETS SR201 AND SR202 FOR DETAILS. TYPE [*] INDICATES NO-REPAIR
- (A) — CHAINLINK FENCE REPAIR TYPES, SEE SHEETS SF201 AND SF202 FOR DETAILS
- 1.0 — TOP OF WALL LEANING DISTANCE TOWARD CHANNEL IN INCHES, SEE SHEETS SL101 TO SL207 FOR CONCRETE LINING

PHOTO LEGEND:

- A1 — WALL "A" ELEVATION PHOTO IDENTIFICATION SEE FLATTEN VIEW FOR PHOTO LOCATION
- B1 — WALL "B" ELEVATION PHOTO IDENTIFICATION SEE FLATTEN VIEW FOR PHOTO LOCATION
- F1 — CHANNEL FLOOR PHOTO IDENTIFICATION SEE FLOOR PLAN VIEW FOR PHOTO LOCATION

B1



B2



B3



F1



F2



F3



A1



A2



A3



### SPALL REPAIR CHART

| MARK | LOCATION | REPAIR TYPE | SPALL DIMENSION | | | SPALL VOLUME | SPALL CENTER COORDINATE | | RATING |
|---|---|---|---|---|---|---|---|---|---|
| | | | L | W | D | | X | Y OR Z | |
| | | | | | | | | | |
| | | | | | | | | | |
| | | | | | | | | | |
| | | | | | | | | | |
| | | | | | | | | | |
| | | | | | | | | | |
| | | | | | | | | | |

### CHAINLINK FENCE REPAIR CHART

| MARK | LOCATION | REPAIR TYPE | POSTS | TOP RAIL | BOTTOM WIRE | BRACE | FABRIC |
|---|---|---|---|---|---|---|---|
| | | | | | | | |
| | | | | | | | |
| | | | | | | | |
| | | | | | | | |
| | | | | | | | |
| | | | | | | | |
| | | | | | | | |
| | | | | | | | |

NOT IN CONTRACT

### CRACK REPAIR CHART

| MARK | LOCATION | REPAIR TYPE | GENERAL CRACKS (LF) | MAJOR CRACKS | | | | | | RATING |
|---|---|---|---|---|---|---|---|---|---|---|
| | | | | WIDTH (IN) | LENGTH (FT) | START PNT X | START PNT Y,Z | END PNT X | END PNT Y,Z | |
| "GC-1" | WALL "A" | [*] | 65 | - | - | - | - | - | - | 8 |
| "GC-2" | FLOOR | [*] | 170 | - | - | - | - | - | - | 8 |
| "GC-3" | WALL "B" | [*] | 75 | - | - | - | - | - | - | 8 |
| | | | | | | | | | | |
| | | | | | | | | | | |
| | | | | | | | | | | |
| | | | | | | | | | | |

GRAPHIC SCALES:

0 1' 2' 4' 8' 12' 16'

3/16"=1'-0"

| REVISION NO. | DATE | REVISIONS | BY |
|---|---|---|---|
| | | | |

ATHER R. DAR
LICENSED PROFESSIONAL ENGINEER
No. 7808-S
HAWAII U.S.A.

Exp. Date: 4-30-20

THIS WORK WAS PREPARED BY ME OR UNDER MY SUPERVISION AND CONSTRUCTION OF THIS PROJECT WILL BE UNDER MY OBSERVATION

DEPARTMENT OF HAWAIIAN HOMELAND

# NANAKULI FLOOD CONTROL CHANNEL IMPROVEMENTS NANAKULI VALLEY, OAHU HAWAII

CHANNEL SEGMENT 042 REPAIR DETAILS

| | |
|---|---|
| DESIGNED BY: | TTP |
| DRAWN BY: | AK, AP, DL |
| CHECKED BY: | AD |
| SUPV: | |
| DATE: | 03/05/2019 |


HAWAII ENGINEERING GROUP, Inc.
Civil & Structural Engineers
1088 BISHOP STREET #2506
HONOLULU, HI 96813
Tel: 808-533-2092


JOB NO.

SHEET C042
49 OF 225 SHTS

FILE ___ DRAWER ___ ___ FOLDER ___ ___

Plot date: 15-Apr-2020

Full Size Plot

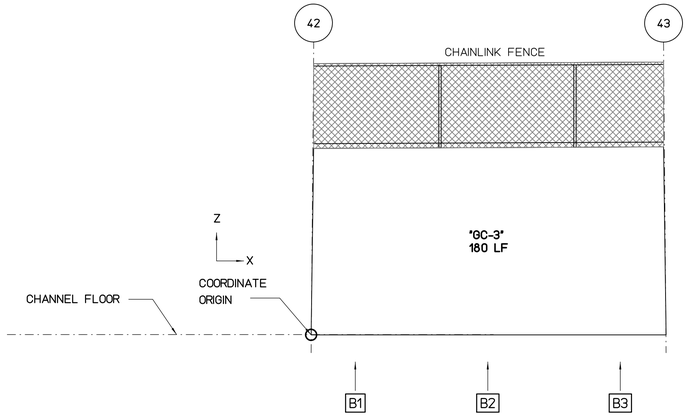


## WALL "B" FLATTEN VIEW

SCALE : 3/16" = 1'-0"

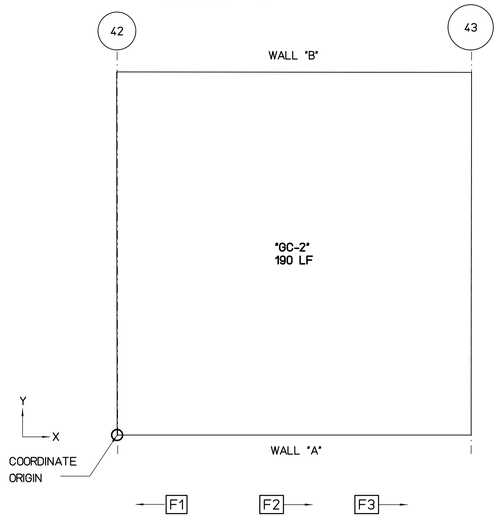


## FLOOR PLAN VIEW

SCALE : 3/16" = 1'-0"

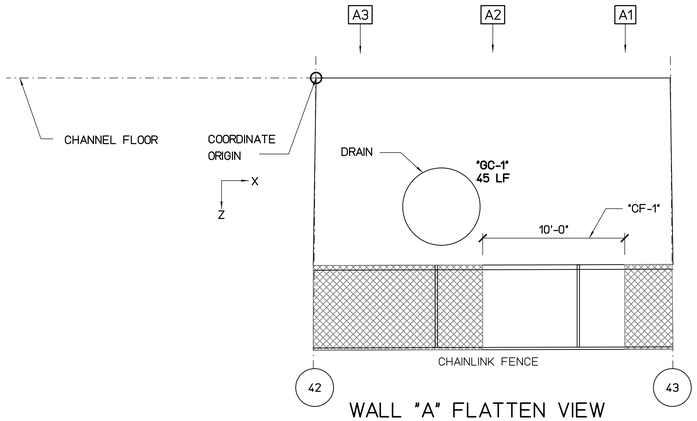


## WALL "A" FLATTEN VIEW

SCALE : 3/16" = 1'-0"

REPAIR LEGEND AND NOTES:

- 2 — CRACK AND SPALL REPAIR TYPES, SEE SHEETS SR201 AND SR202 FOR DETAILS. TYPE [*] INDICATES NO-REPAIR
- (A) — CHAINLINK FENCE REPAIR TYPES, SEE SHEETS SF201 AND SF202 FOR DETAILS
- 1.0 — TOP OF WALL LEANING DISTANCE TOWARD CHANNEL IN INCHES, SEE SHEETS SL101 TO SL207 FOR CONCRETE LINING

PHOTO LEGEND:

- A1 — WALL "A" ELEVATION PHOTO IDENTIFICATION SEE FLATTEN VIEW FOR PHOTO LOCATION
- B1 — WALL "B" ELEVATION PHOTO IDENTIFICATION SEE FLATTEN VIEW FOR PHOTO LOCATION
- F1 — CHANNEL FLOOR PHOTO IDENTIFICATION SEE FLOOR PLAN VIEW FOR PHOTO LOCATION

B1



B2



B3



F1



F2



F3



A1



A2



A3



### SPALL REPAIR CHART

| MARK | LOCATION | REPAIR TYPE | SPALL DIMENSION L | SPALL DIMENSION W | SPALL DIMENSION D | SPALL VOLUME | SPALL CENTER COORDINATE X | SPALL CENTER COORDINATE Y OR Z | RATING |
|---|---|---|---|---|---|---|---|---|---|
| | | | | | | | | | |
| | | | | | | | | | |
| | | | | | | | | | |
| | | | | | | | | | |
| | | | | | | | | | |
| | | | | | | | | | |
| | | | | | | | | | |
| | | | | | | | | | |

### CHAINLINK FENCE REPAIR CHART

| MARK | LOCATION | REPAIR TYPE | POSTS | TOP RAIL | BOTTOM WIRE | BRACE | FABRIC |
|---|---|---|---|---|---|---|---|
| "CF-1" | WALL "A" | (E) | - | - | - | - | MISSING 10'x6' |
| | | | | | | | |
| | | | | | | | |
| | | | | | | | |
| | | | | | | | |
| | | | | | | | |
| | | | | | | | |
| | | | | | | | |
| | | | | | | | |

NOT IN CONTRACT

### CRACK REPAIR CHART

| MARK | LOCATION | REPAIR TYPE | GENERAL CRACKS (LF) | MAJOR CRACKS WIDTH (IN) | MAJOR CRACKS LENGTH (FT) | MAJOR CRACKS START PNT X | MAJOR CRACKS START PNT Y,Z | MAJOR CRACKS END PNT X | MAJOR CRACKS END PNT Y,Z | RATING |
|---|---|---|---|---|---|---|---|---|---|---|
| "GC-1" | WALL "A" | [*] | 45 | - | - | - | - | - | - | 8 |
| "GC-2" | FLOOR | [*] | 190 | - | - | - | - | - | - | 8 |
| "GC-3" | WALL "B" | [*] | 180 | - | - | - | - | - | - | 8 |
| | | | | | | | | | | |
| | | | | | | | | | | |
| | | | | | | | | | | |
| | | | | | | | | | | |

GRAPHIC SCALES:

0 1' 2' 4' 8' 12' 16'

3/16"=1'-0"

| REVISION NO. | DATE | REVISIONS | BY |
|---|---|---|---|
| | | | |

ARTHER R. DAR
LICENSED PROFESSIONAL ENGINEER
No. 7808-S
HAWAII U.S.A.

Exp. Date: 4-30-20

THIS WORK WAS PREPARED BY ME OR UNDER MY SUPERVISION AND CONSTRUCTION OF THIS PROJECT WILL BE UNDER MY OBSERVATION

DEPARTMENT OF HAWAIIAN HOMELAND

NANAKULI FLOOD CONTROL
CHANNEL IMPROVEMENTS
NANAKULI VALLEY, OAHU HAWAII

CHANNEL SEGMENT 043 REPAIR DETAILS

| | |
|---|---|
| DESIGNED BY: | TTP |
| DRAWN BY: | AK, AP, DL |
| CHECKED BY: | AD |
| SUPV: | |
| DATE: | 03/05/2019 |

HAWAII ENGINEERING GROUP, Inc.
Civil & Structural Engineers
1088 BISHOP STREET #2506
HONOLULU, HI 96813
Tel: 808-533-2092

JOB NO.

SHEET C043
50 OF 225 SHTS

FILE ___ DRAWER ___ ___ FOLDER ___ ___

Plot date: 15-Apr-2020

Full Size Plot

Plot date: 15-Apr-2020
Full Size Plot

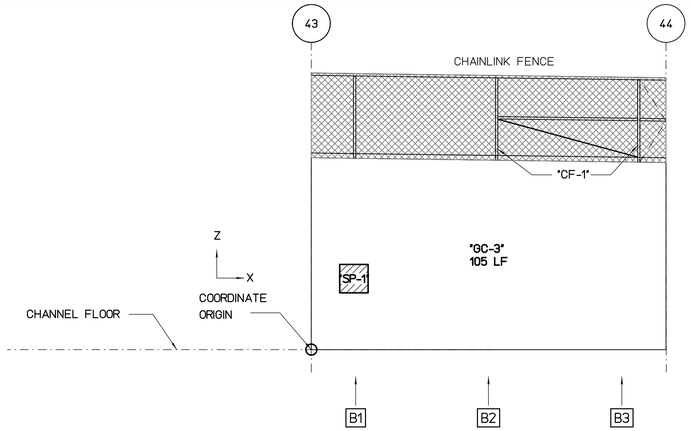


## WALL "B" FLATTEN VIEW

SCALE : 3/16" = 1'-0"

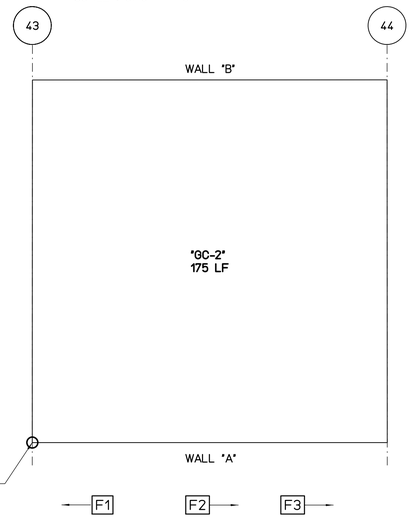


## FLOOR PLAN VIEW

SCALE : 3/16" = 1'-0"

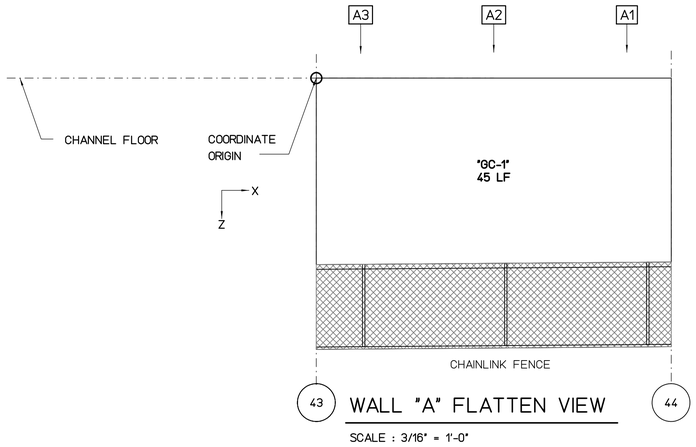


## WALL "A" FLATTEN VIEW

SCALE : 3/16" = 1'-0"

REPAIR LEGEND AND NOTES:

- [2] CRACK AND SPALL REPAIR TYPES, SEE SHEETS SR201 AND SR202 FOR DETAILS. TYPE [*] INDICATES NO-REPAIR
- (A) CHAINLINK FENCE REPAIR TYPES, SEE SHEETS SF201 AND SF202 FOR DETAILS
- [1.0] TOP OF WALL LEANING DISTANCE TOWARD CHANNEL IN INCHES, SEE SHEETS SL101 TO SL207 FOR CONCRETE LINING

PHOTO LEGEND:

- [A1] WALL "A" ELEVATION PHOTO IDENTIFICATION SEE FLATTEN VIEW FOR PHOTO LOCATION
- [B1] WALL "B" ELEVATION PHOTO IDENTIFICATION SEE FLATTEN VIEW FOR PHOTO LOCATION
- [F1] CHANNEL FLOOR PHOTO IDENTIFICATION SEE FLOOR PLAN VIEW FOR PHOTO LOCATION

B1



B2



B3



F1



F2



F3



A1



A2



A3



### SPALL REPAIR CHART

| MARK | LOCATION | REPAIR TYPE | SPALL DIMENSION L | SPALL DIMENSION W | SPALL DIMENSION D | SPALL VOLUME | SPALL CENTER COORDINATE X | SPALL CENTER COORDINATE Y OR Z | RATING |
|---|---|---|---|---|---|---|---|---|---|
| "SP-1" | WALL "B" | [3] | 24 | 24 | 2 | 1152 | 3 | 5 | 7 |

### CHAINLINK FENCE REPAIR CHART

| MARK | LOCATION | REPAIR TYPE | POSTS | TOP RAIL | BOTTOM WIRE | BRACE | FABRIC |
|---|---|---|---|---|---|---|---|
| "CF-1" | WALL "B" | (A) | BENT 2 | - | - | - | - |

NOT IN CONTRACT

### CRACK REPAIR CHART

| MARK | LOCATION | REPAIR TYPE | GENERAL CRACKS (LF) | MAJOR CRACKS WIDTH (IN) | MAJOR CRACKS LENGTH (FT) | MAJOR CRACKS START PNT X | MAJOR CRACKS START PNT Y,Z | MAJOR CRACKS END PNT X | MAJOR CRACKS END PNT Y,Z | RATING |
|---|---|---|---|---|---|---|---|---|---|---|
| "GC-1" | WALL "A" | [*] | 45 | - | - | - | - | - | - | 8 |
| "GC-2" | FLOOR | [*] | 175 | - | - | - | - | - | - | 8 |
| "GC-3" | WALL "B" | [*] | 105 | - | - | - | - | - | - | 8 |

GRAPHIC SCALES:

0 1' 2' 4' 8' 12' 16'

3/16"=1'-0"

| REVISION NO. | DATE | REVISIONS | BY |
|---|---|---|---|

ARTHER R. DAR
LICENSED PROFESSIONAL ENGINEER
No. 7808-S
HAWAII U.S.A.
Exp. Date: 4-30-20

THIS WORK WAS PREPARED BY ME OR UNDER MY SUPERVISION AND CONSTRUCTION OF THIS PROJECT WILL BE UNDER MY OBSERVATION

DEPARTMENT OF HAWAIIAN HOMELAND

# NANAKULI FLOOD CONTROL CHANNEL IMPROVEMENTS NANAKULI VALLEY, OAHU HAWAII

## CHANNEL SEGMENT [044] REPAIR DETAILS

| | |
|---|---|
| DESIGNED BY: | TTP |
| DRAWN BY: | AK, AP, DL |
| CHECKED BY: | AD |
| SUPV: | |
| DATE: | 03/05/2019 |

HAWAII ENGINEERING GROUP, Inc.
Civil & Structural Engineers
1088 BISHOP STREET #2506
HONOLULU, HI 96813
Tel: 808-533-2092

JOB NO.

SHEET C044
51 OF 225 SHTS

FILE ___ DRAWER ___ ___ FOLDER ___ ___

Plot date: 15-Apr-2020
Full Size Plot

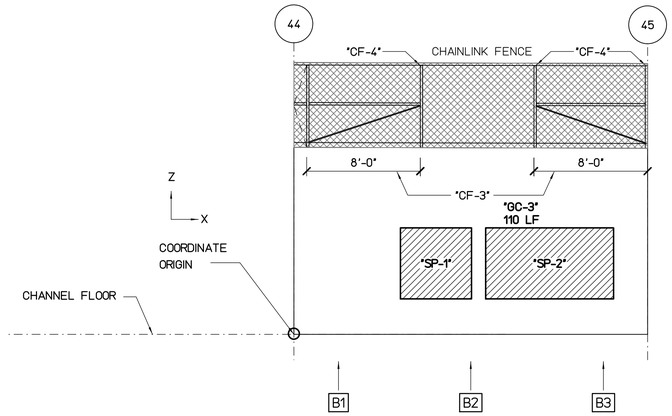


## WALL "B" FLATTEN VIEW

SCALE : 3/16" = 1'-0"

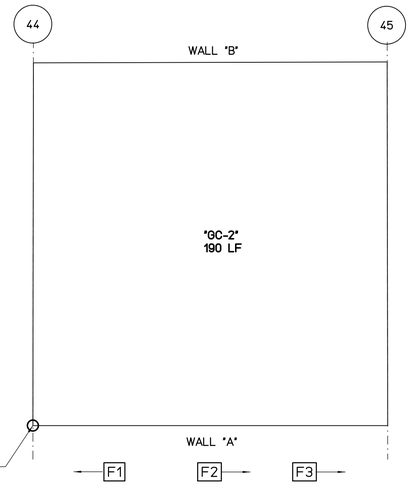


## FLOOR PLAN VIEW

SCALE : 3/16" = 1'-0"

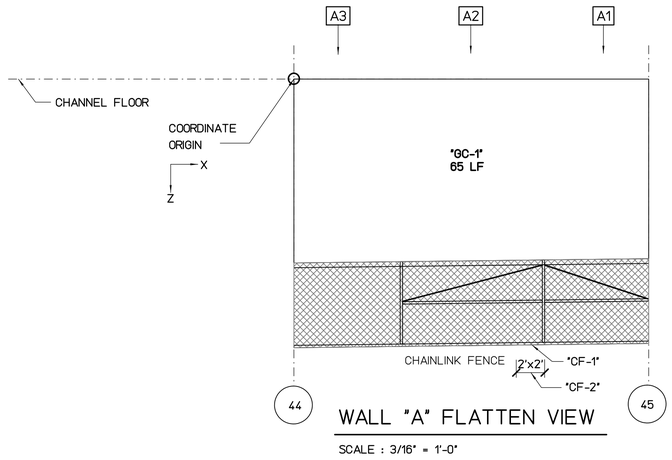


## WALL "A" FLATTEN VIEW

SCALE : 3/16" = 1'-0"

REPAIR LEGEND AND NOTES:

- 2 — CRACK AND SPALL REPAIR TYPES, SEE SHEETS SR201 AND SR202 FOR DETAILS. TYPE * INDICATES NO-REPAIR
- A — CHAINLINK FENCE REPAIR TYPES, SEE SHEETS SF201 AND SF202 FOR DETAILS
- 1.0 — TOP OF WALL LEANING DISTANCE TOWARD CHANNEL IN INCHES, SEE SHEETS SL101 TO SL207 FOR CONCRETE LINING

PHOTO LEGEND:

- A1 — WALL "A" ELEVATION PHOTO IDENTIFICATION SEE FLATTEN VIEW FOR PHOTO LOCATION
- B1 — WALL "B" ELEVATION PHOTO IDENTIFICATION SEE FLATTEN VIEW FOR PHOTO LOCATION
- F1 — CHANNEL FLOOR PHOTO IDENTIFICATION SEE FLOOR PLAN VIEW FOR PHOTO LOCATION

B1



B2



B3



F1



F2



F3



A1



A2



A3



### SPALL REPAIR CHART

| MARK | LOCATION | REPAIR TYPE | SPALL DIMENSION L | SPALL DIMENSION W | SPALL DIMENSION D | SPALL VOLUME | SPALL CENTER COORDINATE X | SPALL CENTER COORDINATE Y OR Z | RATING |
|---|---|---|---|---|---|---|---|---|---|
| "SP-1" | WALL "B" | 3 | 60 | 60 | 2 | 7200 | 10 | 5 | 7 |
| "SP-2" | WALL "B" | 3 | 108 | 60 | 3 | 19440 | 18 | 5 | 6 |

### CHAINLINK FENCE REPAIR CHART

| MARK | LOCATION | REPAIR TYPE | POSTS | TOP RAIL | BOTTOM WIRE | BRACE | FABRIC |
|---|---|---|---|---|---|---|---|
| "CF-1" | WALL "A" | C | - | DAMAGED 2' | - | - | - |
| "CF-2" | WALL "A" | E | - | - | - | - | DAMAGED 2'x2' |
| "CF-3" | WALL "B" | E | - | - | - | - | DAMAGED 16'x6' |
| "CF-4" | WALL "B" | A | BENT | - | - | - | - |

NOT IN CONTRACT

### CRACK REPAIR CHART

| MARK | LOCATION | REPAIR TYPE | GENERAL CRACKS (LF) | MAJOR CRACKS WIDTH (IN) | MAJOR CRACKS LENGTH (FT) | MAJOR CRACKS START PNT X | MAJOR CRACKS START PNT Y,Z | MAJOR CRACKS END PNT X | MAJOR CRACKS END PNT Y,Z | RATING |
|---|---|---|---|---|---|---|---|---|---|---|
| "GC-1" | WALL "A" | * | 65 | - | - | - | - | - | - | 8 |
| "GC-2" | FLOOR | * | 190 | - | - | - | - | - | - | 8 |
| "GC-3" | WALL "B" | * | 110 | - | - | - | - | - | - | 8 |

GRAPHIC SCALES:

0 1' 2' 4' 8' 12' 16'

3/16"=1'-0"

| REVISION NO. | DATE | REVISIONS | BY |
|---|---|---|---|
| | | | |

ATHER R. DAR
LICENSED PROFESSIONAL ENGINEER
No. 7808-S
HAWAII U.S.A.
Exp. Date: 4-30-20

THIS WORK WAS PREPARED BY ME OR UNDER MY SUPERVISION AND CONSTRUCTION OF THIS PROJECT WILL BE UNDER MY OBSERVATION

DEPARTMENT OF HAWAIIAN HOMELAND

NANAKULI FLOOD CONTROL CHANNEL IMPROVEMENTS NANAKULI VALLEY, OAHU HAWAII

CHANNEL SEGMENT 045 REPAIR DETAILS

| | |
|---|---|
| DESIGNED BY: | TTP |
| DRAWN BY: | AK, AP, DL |
| CHECKED BY: | AD |
| SUPV: | |
| DATE: | 03/05/2019 |

HAWAII ENGINEERING GROUP, Inc.
Civil & Structural Engineers
1088 BISHOP STREET #2506
HONOLULU, HI 96813
Tel: 808-533-2092

JOB NO.

SHEET C045
52 OF 225 SHTS

FILE ___ DRAWER ___ ___ FOLDER ___ ___

Plot date: 15-Apr-2020
Full Size Plot

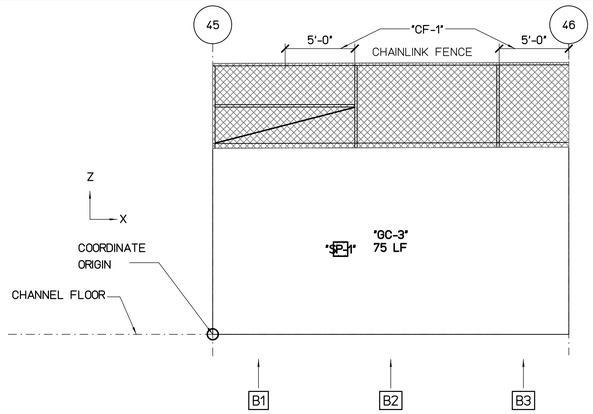


## WALL "B" FLATTEN VIEW

SCALE : 3/16" = 1'-0"

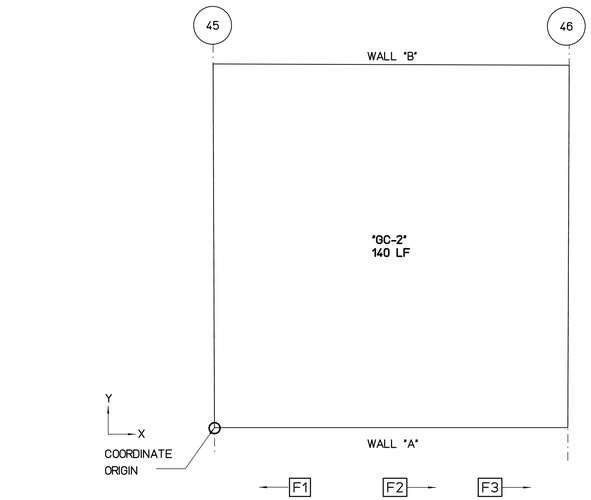


## FLOOR PLAN VIEW

SCALE : 3/16" = 1'-0"

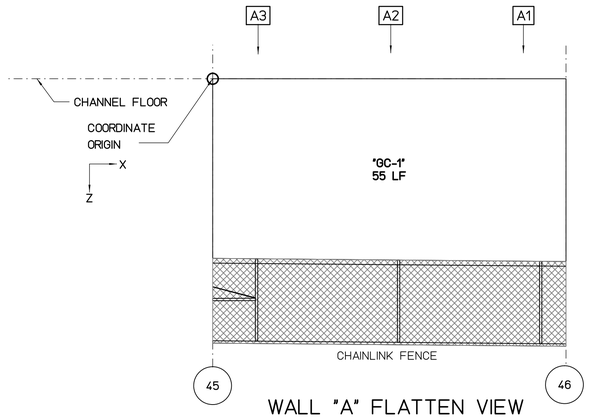


## WALL "A" FLATTEN VIEW

SCALE : 3/16" = 1'-0"

REPAIR LEGEND AND NOTES:

- 2 — CRACK AND SPALL REPAIR TYPES, SEE SHEETS SR201 AND SR202 FOR DETAILS. TYPE [*] INDICATES NO-REPAIR
- (A) — CHAINLINK FENCE REPAIR TYPES, SEE SHEETS SF201 AND SF202 FOR DETAILS
- 1.0 — TOP OF WALL LEANING DISTANCE TOWARD CHANNEL IN INCHES, SEE SHEETS SL101 TO SL207 FOR CONCRETE LINING

PHOTO LEGEND:

- A1 — WALL "A" ELEVATION PHOTO IDENTIFICATION SEE FLATTEN VIEW FOR PHOTO LOCATION
- B1 — WALL "B" ELEVATION PHOTO IDENTIFICATION SEE FLATTEN VIEW FOR PHOTO LOCATION
- F1 — CHANNEL FLOOR PHOTO IDENTIFICATION SEE FLOOR PLAN VIEW FOR PHOTO LOCATION

B1



B2



B3



F1



F2



F3



A1



A2



A3



### SPALL REPAIR CHART

| MARK | LOCATION | REPAIR TYPE | SPALL DIMENSION L | SPALL DIMENSION W | SPALL DIMENSION D | SPALL VOLUME | SPALL CENTER COORDINATE X | SPALL CENTER COORDINATE Y OR Z | RATING |
|---|---|---|---|---|---|---|---|---|---|
| "SP-1" | WALL "B" | 3 | 12 | 12 | 2 | 288 | 9 | 6 | 7 |

### CHAINLINK FENCE REPAIR CHART

| MARK | LOCATION | REPAIR TYPE | POSTS | TOP RAIL | BOTTOM WIRE | BRACE | FABRIC |
|---|---|---|---|---|---|---|---|
| "CF-1" | WALL "B" | E | - | - | - | - | DAMAGED 10' |

NOT IN CONTRACT

### CRACK REPAIR CHART

| MARK | LOCATION | REPAIR TYPE | GENERAL CRACKS (LF) | MAJOR CRACKS WIDTH (IN) | MAJOR CRACKS LENGTH (FT) | MAJOR CRACKS START PNT X | MAJOR CRACKS START PNT Y,Z | MAJOR CRACKS END PNT X | MAJOR CRACKS END PNT Y,Z | RATING |
|---|---|---|---|---|---|---|---|---|---|---|
| "GC-1" | WALL "A" | * | 55 | - | - | - | - | - | - | 8 |
| "GC-2" | FLOOR | * | 140 | - | - | - | - | - | - | 8 |
| "GC-3" | WALL "B" | * | 75 | - | - | - | - | - | - | 8 |

GRAPHIC SCALES:

0 1' 2' 4' 8' 12' 16'

3/16"=1'-0"

| REVISION NO. | DATE | REVISIONS | BY |
|---|---|---|---|

ATHER R. DAR
LICENSED PROFESSIONAL ENGINEER
No. 7808-S
HAWAII U.S.A.

Exp. Date: 4-30-20

THIS WORK WAS PREPARED BY ME OR UNDER MY SUPERVISION AND CONSTRUCTION OF THIS PROJECT WILL BE UNDER MY OBSERVATION

DEPARTMENT OF HAWAIIAN HOMELAND

NANAKULI FLOOD CONTROL
CHANNEL IMPROVEMENTS
NANAKULI VALLEY, OAHU HAWAII

CHANNEL SEGMENT 046 REPAIR DETAILS

| | |
|---|---|
| DESIGNED BY: | TTP |
| DRAWN BY: | AK, AP, DL |
| CHECKED BY: | AD |
| SUPV: | |
| DATE: | 03/05/2019 |

HAWAII ENGINEERING GROUP, Inc.
Civil & Structural Engineers
1088 BISHOP STREET #2506
HONOLULU, HI 96813
Tel: 808-533-2092

JOB NO.

SHEET C046
53 OF 225 SHTS

FILE ___ DRAWER ___ ___ FOLDER ___ ___

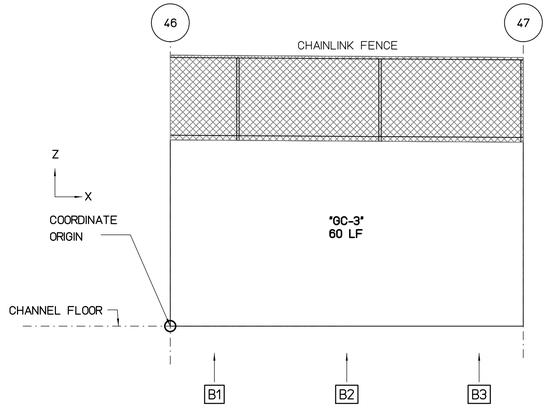


## WALL "B" FLATTEN VIEW

SCALE : 3/16" = 1'-0"

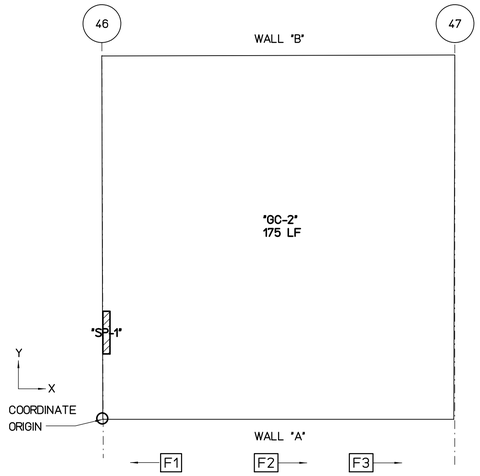


## FLOOR PLAN VIEW

SCALE : 3/16" = 1'-0"

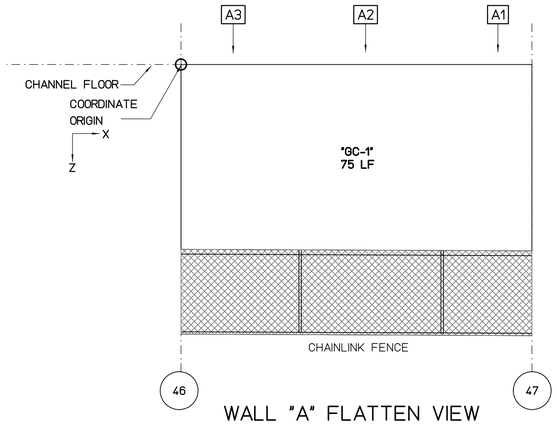


## WALL "A" FLATTEN VIEW

SCALE : 3/16" = 1'-0"

REPAIR LEGEND AND NOTES:

- 2 — CRACK AND SPALL REPAIR TYPES, SEE SHEETS SR201 AND SR202 FOR DETAILS. TYPE ⊠ INDICATES NO-REPAIR
- (A) — CHAINLINK FENCE REPAIR TYPES, SEE SHEETS SF201 AND SF202 FOR DETAILS
- 1.0 — TOP OF WALL LEANING DISTANCE TOWARD CHANNEL IN INCHES, SEE SHEETS SL101 TO SL207 FOR CONCRETE LINING

PHOTO LEGEND:

- A1 — WALL "A" ELEVATION PHOTO IDENTIFICATION SEE FLATTEN VIEW FOR PHOTO LOCATION
- B1 — WALL "B" ELEVATION PHOTO IDENTIFICATION SEE FLATTEN VIEW FOR PHOTO LOCATION
- F1 — CHANNEL FLOOR PHOTO IDENTIFICATION SEE FLOOR PLAN VIEW FOR PHOTO LOCATION

B1



B2



B3



F1



F2



F3



A1



A2



A3



### SPALL REPAIR CHART

| MARK | LOCATION | REPAIR TYPE | SPALL DIMENSION L | SPALL DIMENSION W | SPALL DIMENSION D | SPALL VOLUME | SPALL CENTER COORDINATE X | SPALL CENTER COORDINATE Y OR Z | RATING |
|---|---|---|---|---|---|---|---|---|---|
| "SP-1" | FLOOR | 3 | 6 | 36 | 2 | 432 | 0.3 | 6 | 7 |

### CHAINLINK FENCE REPAIR CHART

| MARK | LOCATION | REPAIR TYPE | POSTS | TOP RAIL | BOTTOM WIRE | BRACE | FABRIC |
|---|---|---|---|---|---|---|---|

NOT IN CONTRACT

### CRACK REPAIR CHART

| MARK | LOCATION | REPAIR TYPE | GENERAL CRACKS (LF) | MAJOR CRACKS WIDTH (IN) | MAJOR CRACKS LENGTH (FT) | MAJOR CRACKS START PNT X | MAJOR CRACKS START PNT Y,Z | MAJOR CRACKS END PNT X | MAJOR CRACKS END PNT Y,Z | RATING |
|---|---|---|---|---|---|---|---|---|---|---|
| "GC-1" | WALL "A" | ⊠ | 75 | - | - | - | - | - | - | 8 |
| "GC-2" | FLOOR | ⊠ | 175 | - | - | - | - | - | - | 8 |
| "GC-3" | WALL "B" | ⊠ | 60 | - | - | - | - | - | - | 8 |

GRAPHIC SCALES:

0 1' 2' 4' 8' 12' 16'

3/16"=1'-0"

| REVISION NO. | DATE | REVISIONS | BY |
|---|---|---|---|

ATHER R. DAR
LICENSED PROFESSIONAL ENGINEER
No. 7808-S
HAWAII U.S.A.

Exp. Date: 4-30-20

THIS WORK WAS PREPARED BY ME OR UNDER MY SUPERVISION AND CONSTRUCTION OF THIS PROJECT WILL BE UNDER MY OBSERVATION

DEPARTMENT OF HAWAIIAN HOMELAND

NANAKULI FLOOD CONTROL
CHANNEL IMPROVEMENTS
NANAKULI VALLEY, OAHU HAWAII

CHANNEL SEGMENT 047 REPAIR DETAILS

| | |
|---|---|
| DESIGNED BY: | TTP |
| DRAWN BY: | AK, AP, DL |
| CHECKED BY: | AD |
| SUPV: | |
| DATE: | 03/05/2019 |


HAWAII ENGINEERING GROUP, Inc.
Civil & Structural Engineers
1088 BISHOP STREET #2506
HONOLULU, HI 96813
Tel: 808-533-2092


JOB NO.

SHEET C047
54 OF 225 SHTS

FILE ___ ___ DRAWER ___ ___ ___ FOLDER ___ ___

Plot date: 15-Apr-2020

Full Size Plot

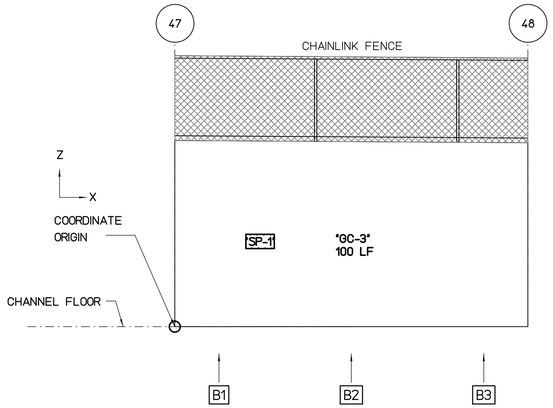


## WALL "B" FLATTEN VIEW

SCALE : 3/16" = 1'-0"

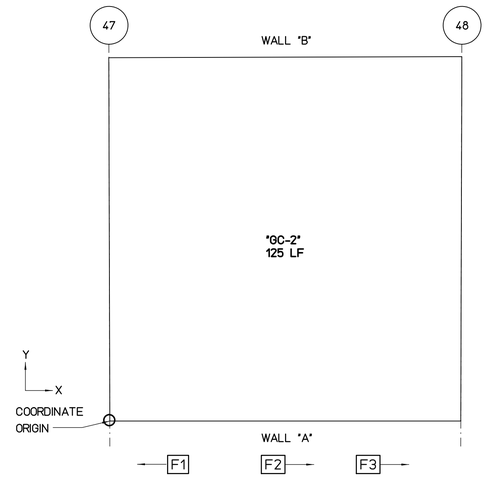


## FLOOR PLAN VIEW

SCALE : 3/16" = 1'-0"

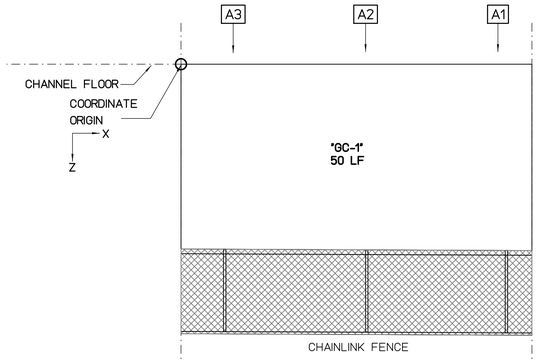


## WALL "A" FLATTEN VIEW

SCALE : 3/16" = 1'-0"

REPAIR LEGEND AND NOTES:

- 2 — CRACK AND SPALL REPAIR TYPES, SEE SHEETS SR201 AND SR202 FOR DETAILS. TYPE [*] INDICATES NO-REPAIR
- (A) — CHAINLINK FENCE REPAIR TYPES, SEE SHEETS SF201 AND SF202 FOR DETAILS
- 1.0 — TOP OF WALL LEANING DISTANCE TOWARD CHANNEL IN INCHES, SEE SHEETS SL101 TO SL207 FOR CONCRETE LINING

PHOTO LEGEND:

- A1 — WALL "A" ELEVATION PHOTO IDENTIFICATION SEE FLATTEN VIEW FOR PHOTO LOCATION
- B1 — WALL "B" ELEVATION PHOTO IDENTIFICATION SEE FLATTEN VIEW FOR PHOTO LOCATION
- F1 — CHANNEL FLOOR PHOTO IDENTIFICATION SEE FLOOR PLAN VIEW FOR PHOTO LOCATION

B1



B2



B3



F1



F2



F3



A1



A2



A3



### SPALL REPAIR CHART

| MARK | LOCATION | REPAIR TYPE | SPALL DIMENSION L | SPALL DIMENSION W | SPALL DIMENSION D | SPALL VOLUME | SPALL CENTER COORDINATE X | SPALL CENTER COORDINATE Y OR Z | RATING |
|---|---|---|---|---|---|---|---|---|---|
| "SP-1" | WALL "B" | 3 | 24 | 12 | 2 | 576 | 6 | 6 | 6 |

### CHAINLINK FENCE REPAIR CHART

| MARK | LOCATION | REPAIR TYPE | POSTS | TOP RAIL | BOTTOM WIRE | BRACE | FABRIC |
|---|---|---|---|---|---|---|---|

NOT IN CONTRACT

### CRACK REPAIR CHART

| MARK | LOCATION | REPAIR TYPE | GENERAL CRACKS (LF) | MAJOR CRACKS WIDTH (IN) | MAJOR CRACKS LENGTH (FT) | MAJOR CRACKS START PNT X | MAJOR CRACKS START PNT Y,Z | MAJOR CRACKS END PNT X | MAJOR CRACKS END PNT Y,Z | RATING |
|---|---|---|---|---|---|---|---|---|---|---|
| "GC-1" | WALL "A" | * | 50 | - | - | - | - | - | - | 8 |
| "GC-2" | FLOOR | * | 125 | - | - | - | - | - | - | 8 |
| "GC-3" | WALL "B" | * | 100 | - | - | - | - | - | - | 8 |

GRAPHIC SCALES:

0 1' 2' 4' 8' 12' 16'

3/16"=1'-0"

| REVISION NO. | DATE | REVISIONS | BY |
|---|---|---|---|

ATHER R. DAR
LICENSED PROFESSIONAL ENGINEER
No. 7808-S
HAWAII U.S.A.

Exp. Date: 4-30-20

THIS WORK WAS PREPARED BY ME OR UNDER MY SUPERVISION AND CONSTRUCTION OF THIS PROJECT WILL BE UNDER MY OBSERVATION

DEPARTMENT OF HAWAIIAN HOMELAND

NANAKULI FLOOD CONTROL
CHANNEL IMPROVEMENTS
NANAKULI VALLEY, OAHU HAWAII

CHANNEL SEGMENT 048 REPAIR DETAILS

| | |
|---|---|
| DESIGNED BY: | TTP |
| DRAWN BY: | AK, AP, DL |
| CHECKED BY: | AD |
| SUPV: | |
| DATE: | 03/05/2019 |

HAWAII ENGINEERING GROUP, Inc.
Civil & Structural Engineers
1088 BISHOP STREET #2506
HONOLULU, HI 96813
Tel: 808-533-2092

JOB NO.

SHEET C048
55 OF 225 SHTS

FILE ___ DRAWER ___ ___ FOLDER ___ ___

Plot date: 15-Apr-2020

Full Size Plot

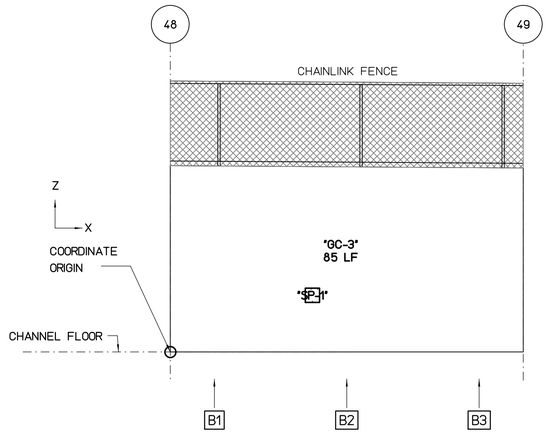


WALL "B" FLATTEN VIEW

SCALE : 3/16" = 1'-0"

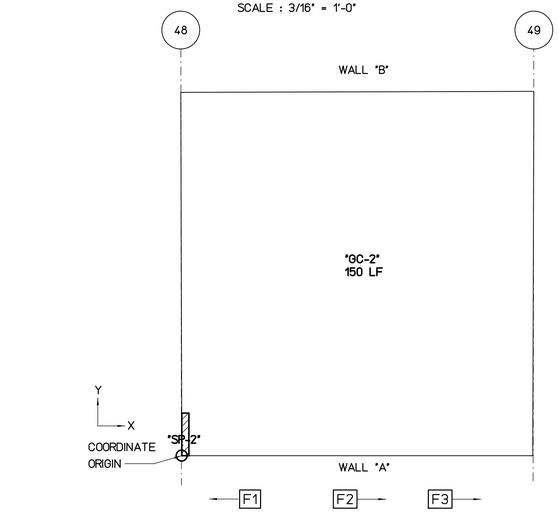


FLOOR PLAN VIEW

SCALE : 3/16" = 1'-0"

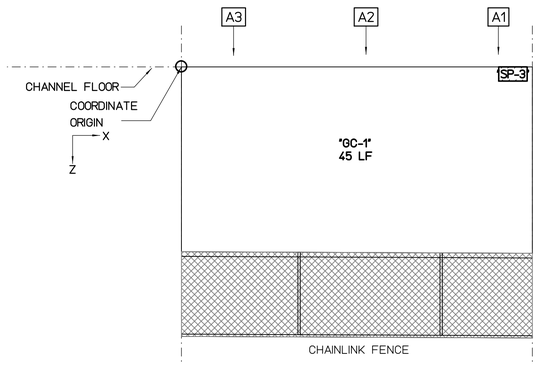


WALL "A" FLATTEN VIEW

SCALE : 3/16" = 1'-0"

REPAIR LEGEND AND NOTES:

- 2 — CRACK AND SPALL REPAIR TYPES, SEE SHEETS SR201 AND SR202 FOR DETAILS. TYPE [*] INDICATES NO-REPAIR
- (A) — CHAINLINK FENCE REPAIR TYPES, SEE SHEETS SF201 AND SF202 FOR DETAILS
- 1.0 — TOP OF WALL LEANING DISTANCE TOWARD CHANNEL IN INCHES, SEE SHEETS SL101 TO SL207 FOR CONCRETE LINING

PHOTO LEGEND:

- A1 — WALL "A" ELEVATION PHOTO IDENTIFICATION SEE FLATTEN VIEW FOR PHOTO LOCATION
- B1 — WALL "B" ELEVATION PHOTO IDENTIFICATION SEE FLATTEN VIEW FOR PHOTO LOCATION
- F1 — CHANNEL FLOOR PHOTO IDENTIFICATION SEE FLOOR PLAN VIEW FOR PHOTO LOCATION

B1



B2



B3



F1



F2



F3



A1



A2



A3



SPALL REPAIR CHART

| MARK | LOCATION | REPAIR TYPE | SPALL DIMENSION L | SPALL DIMENSION W | SPALL DIMENSION D | SPALL VOLUME | SPALL CENTER COORDINATE X | SPALL CENTER COORDINATE Y OR Z | RATING |
|---|---|---|---|---|---|---|---|---|---|
| "SP-1" | WALL "B" | 3 | 12 | 12 | 2 | 288 | 10 | 4 | 7 |
| "SP-2" | FLOOR | 3 | 6 | 36 | 2 | 432 | 0.3 | 1.5 | 7 |
| "SP-3" | WALL "A" | 3 | 24 | 12 | 2 | 576 | 23.4 | 0.5 | 7 |

CHAINLINK FENCE REPAIR CHART

| MARK | LOCATION | REPAIR TYPE | POSTS | TOP RAIL | BOTTOM WIRE | BRACE | FABRIC |
|---|---|---|---|---|---|---|---|

NOT IN CONTRACT

CRACK REPAIR CHART

| MARK | LOCATION | REPAIR TYPE | GENERAL CRACKS (LF) | MAJOR CRACKS WIDTH (IN) | MAJOR CRACKS LENGTH (FT) | MAJOR CRACKS START PNT X | MAJOR CRACKS START PNT Y,Z | MAJOR CRACKS END PNT X | MAJOR CRACKS END PNT Y,Z | RATING |
|---|---|---|---|---|---|---|---|---|---|---|
| "GC-1" | WALL "A" | * | 45 | - | - | - | - | - | - | 8 |
| "GC-2" | FLOOR | * | 150 | - | - | - | - | - | - | 8 |
| "GC-3" | WALL "B" | * | 85 | - | - | - | - | - | - | 8 |

GRAPHIC SCALES:

0 1' 2' 4' 8' 12' 16'

3/16"=1'-0"

| REVISION NO. | DATE | REVISIONS | BY |
|---|---|---|---|

ATHER R. DAR
LICENSED PROFESSIONAL ENGINEER
No. 7808-S
HAWAII U.S.A.

Exp. Date: 4-30-20

THIS WORK WAS PREPARED BY ME OR UNDER MY SUPERVISION AND CONSTRUCTION OF THIS PROJECT WILL BE UNDER MY OBSERVATION

DEPARTMENT OF HAWAIIAN HOMELAND

NANAKULI FLOOD CONTROL CHANNEL IMPROVEMENTS NANAKULI VALLEY, OAHU HAWAII

CHANNEL SEGMENT 049 REPAIR DETAILS

| | |
|---|---|
| DESIGNED BY: | TTP |
| DRAWN BY: | AK, AP, DL |
| CHECKED BY: | AD |
| SUPV: | |
| DATE: | 03/05/2019 |

HAWAII ENGINEERING GROUP, Inc.
Civil & Structural Engineers
1088 BISHOP STREET #2506
HONOLULU, HI 96813
Tel: 808-533-2092

JOB NO.

SHEET C049
56 OF 225 SHTS

FILE ___ DRAWER ___ ___ FOLDER ___ ___

Plot date: 15-Apr-2020

Full Size Plot

Plot date: 15-Apr-2020
Full Size Plot

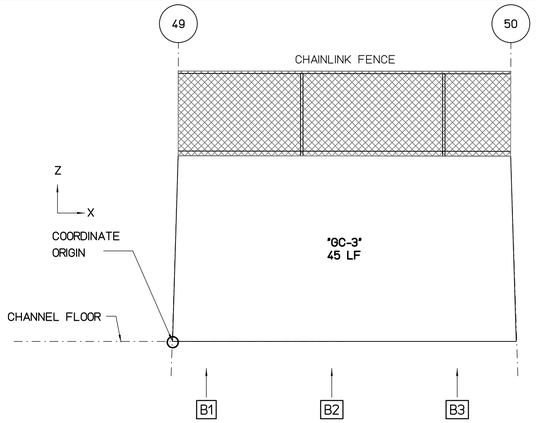


## WALL "B" FLATTEN VIEW

SCALE : 3/16" = 1'-0"

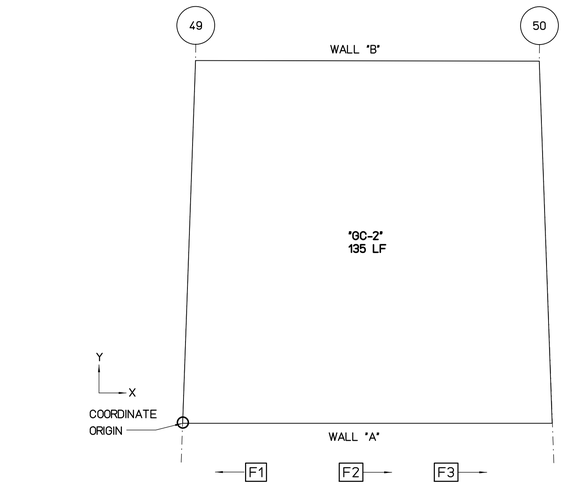


## FLOOR PLAN VIEW

SCALE : 3/16" = 1'-0"

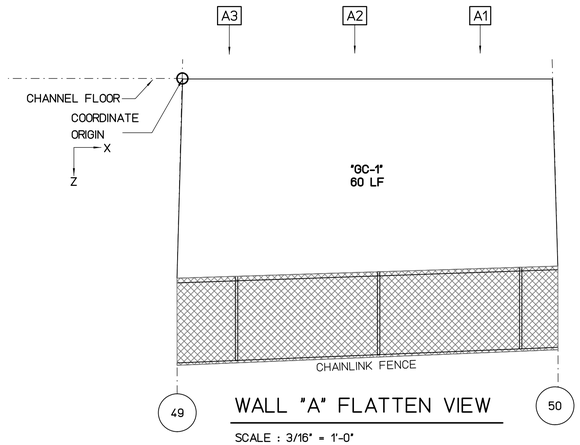


## WALL "A" FLATTEN VIEW

SCALE : 3/16" = 1'-0"

**REPAIR LEGEND AND NOTES:**

- 2 — CRACK AND SPALL REPAIR TYPES, SEE SHEETS SR201 AND SR202 FOR DETAILS. TYPE [*] INDICATES NO-REPAIR
- (A) — CHAINLINK FENCE REPAIR TYPES, SEE SHEETS SF201 AND SF202 FOR DETAILS
- 1.0 — TOP OF WALL LEANING DISTANCE TOWARD CHANNEL IN INCHES, SEE SHEETS SL101 TO SL207 FOR CONCRETE LINING

**PHOTO LEGEND:**

- A1 — WALL "A" ELEVATION PHOTO IDENTIFICATION SEE FLATTEN VIEW FOR PHOTO LOCATION
- B1 — WALL "B" ELEVATION PHOTO IDENTIFICATION SEE FLATTEN VIEW FOR PHOTO LOCATION
- F1 — CHANNEL FLOOR PHOTO IDENTIFICATION SEE FLOOR PLAN VIEW FOR PHOTO LOCATION

B1



B2



B3



F1



F2



F3



A1



A2



A3



### SPALL REPAIR CHART

| MARK | LOCATION | REPAIR TYPE | SPALL DIMENSION L | SPALL DIMENSION W | SPALL DIMENSION D | SPALL VOLUME | SPALL CENTER COORDINATE X | SPALL CENTER COORDINATE Y OR Z | RATING |
|---|---|---|---|---|---|---|---|---|---|
| | | | | | | | | | |
| | | | | | | | | | |
| | | | | | | | | | |
| | | | | | | | | | |
| | | | | | | | | | |
| | | | | | | | | | |
| | | | | | | | | | |
| | | | | | | | | | |

### CHAINLINK FENCE REPAIR CHART

| MARK | LOCATION | REPAIR TYPE | POSTS | TOP RAIL | BOTTOM WIRE | BRACE | FABRIC |
|---|---|---|---|---|---|---|---|
| | | | | | | | |
| | | | | | | | |
| | | | | | | | |
| | | | | | | | |
| | | | | | | | |
| | | | | | | | |
| | | | | | | | |
| | | | | | | | |

NOT IN CONTRACT

### CRACK REPAIR CHART

| MARK | LOCATION | REPAIR TYPE | GENERAL CRACKS (LF) | MAJOR CRACKS WIDTH (IN) | MAJOR CRACKS LENGTH (FT) | MAJOR CRACKS START PNT X | MAJOR CRACKS START PNT Y,Z | MAJOR CRACKS END PNT X | MAJOR CRACKS END PNT Y,Z | RATING |
|---|---|---|---|---|---|---|---|---|---|---|
| "GC-1" | WALL "A" | [*] | 60 | - | - | - | - | - | - | 8 |
| "GC-2" | FLOOR | [*] | 135 | - | - | - | - | - | - | 8 |
| "GC-3" | WALL "B" | [*] | 45 | - | - | - | - | - | - | 8 |
| | | | | | | | | | | |
| | | | | | | | | | | |
| | | | | | | | | | | |
| | | | | | | | | | | |

GRAPHIC SCALES:

0 1' 2' 4' 8' 12' 16'

3/16"=1'-0"

| REVISION NO. | DATE | REVISIONS | BY |
|---|---|---|---|
| | | | |

ATHER R. DAR
LICENSED PROFESSIONAL ENGINEER
No. 7808-S
HAWAII U.S.A.

Exp. Date: 4-30-20

THIS WORK WAS PREPARED BY ME OR UNDER MY SUPERVISION AND CONSTRUCTION OF THIS PROJECT WILL BE UNDER MY OBSERVATION

DEPARTMENT OF HAWAIIAN HOMELAND

# NANAKULI FLOOD CONTROL CHANNEL IMPROVEMENTS NANAKULI VALLEY, OAHU HAWAII

## CHANNEL SEGMENT 050 REPAIR DETAILS

| | |
|---|---|
| DESIGNED BY: | TTP |
| DRAWN BY: | AK, AP, DL |
| CHECKED BY: | AD |
| SUPV: | |
| DATE: | 03/05/2019 |

HAWAII ENGINEERING GROUP, Inc.
Civil & Structural Engineers
1088 BISHOP STREET #2506
HONOLULU, HI 96813
Tel: 808-533-2092

JOB NO.

SHEET C050
57 OF 225 SHTS

FILE ___ DRAWER ___ ___ FOLDER ___ ___

Plot date: 15-Apr-2020
Full Size Plot

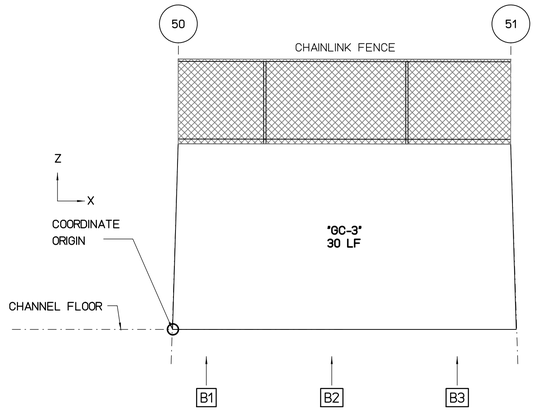


## WALL "B" FLATTEN VIEW

SCALE : 3/16" = 1'-0"

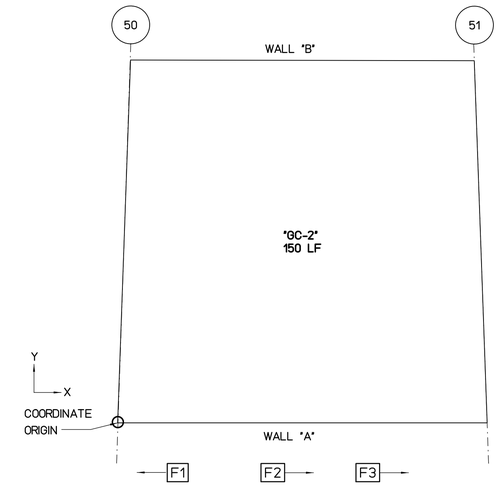


## FLOOR PLAN VIEW

SCALE : 3/16" = 1'-0"

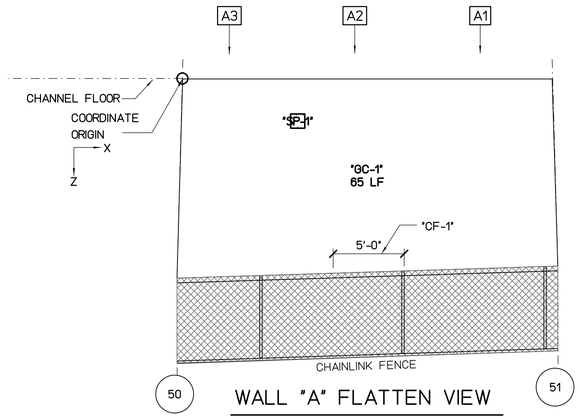


## WALL "A" FLATTEN VIEW

SCALE : 3/16" = 1'-0"

REPAIR LEGEND AND NOTES:

- [2] CRACK AND SPALL REPAIR TYPES, SEE SHEETS SR201 AND SR202 FOR DETAILS. TYPE [*] INDICATES NO-REPAIR
- (A) CHAINLINK FENCE REPAIR TYPES, SEE SHEETS SF201 AND SF202 FOR DETAILS
- [1.0] TOP OF WALL LEANING DISTANCE TOWARD CHANNEL IN INCHES, SEE SHEETS SL101 TO SL207 FOR CONCRETE LINING

PHOTO LEGEND:

- [A1] WALL "A" ELEVATION PHOTO IDENTIFICATION SEE FLATTEN VIEW FOR PHOTO LOCATION
- [B1] WALL "B" ELEVATION PHOTO IDENTIFICATION SEE FLATTEN VIEW FOR PHOTO LOCATION
- [F1] CHANNEL FLOOR PHOTO IDENTIFICATION SEE FLOOR PLAN VIEW FOR PHOTO LOCATION

B1



B2



B3



F1



F2



F3



A1



A2



A3



### SPALL REPAIR CHART

| MARK | LOCATION | REPAIR TYPE | SPALL DIMENSION L | SPALL DIMENSION W | SPALL DIMENSION D | SPALL VOLUME | SPALL CENTER COORDINATE X | SPALL CENTER COORDINATE Y OR Z | RATING |
|---|---|---|---|---|---|---|---|---|---|
| "SP-1" | WALL "A" | [3] | 12 | 12 | 2 | 288 | 8.1 | 3 | 7 |

### CHAINLINK FENCE REPAIR CHART

| MARK | LOCATION | REPAIR TYPE | POSTS | TOP RAIL | BOTTOM WIRE | BRACE | FABRIC |
|---|---|---|---|---|---|---|---|
| "CF-1" | WALL "A" | [E] | - | - | - | - | DAMAGED 5'x6' |

NOT IN CONTRACT

### CRACK REPAIR CHART

| MARK | LOCATION | REPAIR TYPE | GENERAL CRACKS (LF) | MAJOR CRACKS WIDTH (IN) | MAJOR CRACKS LENGTH (FT) | MAJOR CRACKS START PNT X | MAJOR CRACKS START PNT Y,Z | MAJOR CRACKS END PNT X | MAJOR CRACKS END PNT Y,Z | RATING |
|---|---|---|---|---|---|---|---|---|---|---|
| "GC-1" | WALL "A" | [*] | 65 | - | - | - | - | - | - | 8 |
| "GC-2" | FLOOR | [*] | 150 | - | - | - | - | - | - | 8 |
| "GC-3" | WALL "B" | [*] | 30 | - | - | - | - | - | - | 8 |

GRAPHIC SCALES:

0 1' 2' 4' 8' 12' 16'

3/16"=1'-0"

| REVISION NO. | DATE | REVISIONS | BY |
|---|---|---|---|

ATHER R. DAR
LICENSED PROFESSIONAL ENGINEER
No. 7808-S
HAWAII U.S.A.
Exp. Date: 4-30-20

THIS WORK WAS PREPARED BY ME OR UNDER MY SUPERVISION AND CONSTRUCTION OF THIS PROJECT WILL BE UNDER MY OBSERVATION

DEPARTMENT OF HAWAIIAN HOMELAND

# NANAKULI FLOOD CONTROL CHANNEL IMPROVEMENTS NANAKULI VALLEY, OAHU HAWAII

CHANNEL SEGMENT [051] REPAIR DETAILS

| | |
|---|---|
| DESIGNED BY: | TTP |
| DRAWN BY: | AK, AP, DL |
| CHECKED BY: | AD |
| SUPV: | |
| DATE: | 03/05/2019 |

HAWAII ENGINEERING GROUP, Inc.
Civil & Structural Engineers
1088 BISHOP STREET #2506
HONOLULU, HI 96813
Tel: 808-533-2092

JOB NO.

SHEET C051
58 OF 225 SHTS

FILE ___ DRAWER ___ ___ FOLDER ___ ___

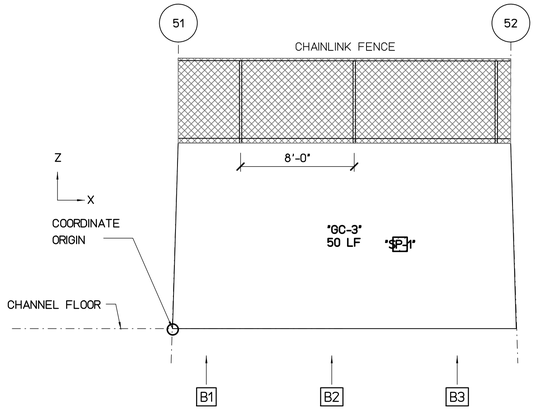


## WALL "B" FLATTEN VIEW

SCALE : 3/16" = 1'-0"

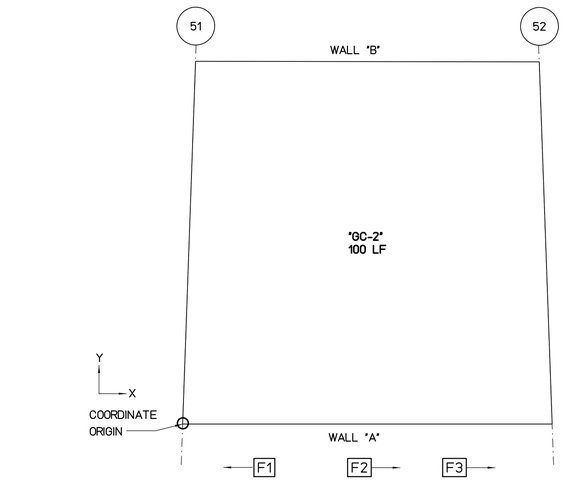


## FLOOR PLAN VIEW

SCALE : 3/16" = 1'-0"

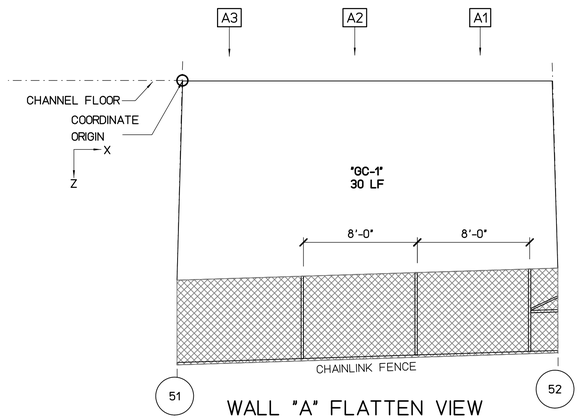


## WALL "A" FLATTEN VIEW

SCALE : 3/16" = 1'-0"

REPAIR LEGEND AND NOTES:

- 2 — CRACK AND SPALL REPAIR TYPES, SEE SHEETS SR201 AND SR202 FOR DETAILS. TYPE [*] INDICATES NO-REPAIR
- (A) — CHAINLINK FENCE REPAIR TYPES, SEE SHEETS SF201 AND SF202 FOR DETAILS
- 1.0 — TOP OF WALL LEANING DISTANCE TOWARD CHANNEL IN INCHES, SEE SHEETS SL101 TO SL207 FOR CONCRETE LINING

PHOTO LEGEND:

- A1 — WALL "A" ELEVATION PHOTO IDENTIFICATION SEE FLATTEN VIEW FOR PHOTO LOCATION
- B1 — WALL "B" ELEVATION PHOTO IDENTIFICATION SEE FLATTEN VIEW FOR PHOTO LOCATION
- F1 — CHANNEL FLOOR PHOTO IDENTIFICATION SEE FLOOR PLAN VIEW FOR PHOTO LOCATION

B1



B2



B3



F1



F2



F3



A1



A2



A3



### SPALL REPAIR CHART

| MARK | LOCATION | REPAIR TYPE | SPALL DIMENSION L | SPALL DIMENSION W | SPALL DIMENSION D | SPALL VOLUME | SPALL CENTER COORDINATE X | SPALL CENTER COORDINATE Y OR Z | RATING |
|---|---|---|---|---|---|---|---|---|---|
| "SP-1" | WALL "B" | 3 | 12 | 12 | 2 | 288 | 16 | 6 | 7 |

### CHAINLINK FENCE REPAIR CHART

| MARK | LOCATION | REPAIR TYPE | POSTS | TOP RAIL | BOTTOM WIRE | BRACE | FABRIC |
|---|---|---|---|---|---|---|---|

NOT IN CONTRACT

### CRACK REPAIR CHART

| MARK | LOCATION | REPAIR TYPE | GENERAL CRACKS (LF) | MAJOR CRACKS WIDTH (IN) | MAJOR CRACKS LENGTH (FT) | MAJOR CRACKS START PNT X | MAJOR CRACKS START PNT Y,Z | MAJOR CRACKS END PNT X | MAJOR CRACKS END PNT Y,Z | RATING |
|---|---|---|---|---|---|---|---|---|---|---|
| "GC-1" | WALL "A" | * | 30 | - | - | - | - | - | - | 8 |
| "GC-2" | FLOOR | * | 100 | - | - | - | - | - | - | 8 |
| "GC-3" | WALL "B" | * | 50 | - | - | - | - | - | - | 8 |

GRAPHIC SCALES:

0 1' 2' 4' 8' 12' 16'

3/16"=1'-0"

| REVISION NO. | DATE | REVISIONS | BY |
|---|---|---|---|

ARTHER R. DAR — LICENSED PROFESSIONAL ENGINEER — No. 7808-S — HAWAII U.S.A.

Exp. Date: 4-30-20

THIS WORK WAS PREPARED BY ME OR UNDER MY SUPERVISION AND CONSTRUCTION OF THIS PROJECT WILL BE UNDER MY OBSERVATION

DEPARTMENT OF HAWAIIAN HOMELAND

# NANAKULI FLOOD CONTROL CHANNEL IMPROVEMENTS NANAKULI VALLEY, OAHU HAWAII

CHANNEL SEGMENT 052 REPAIR DETAILS

| | |
|---|---|
| DESIGNED BY: | TTP |
| DRAWN BY: | AK, AP, DL |
| CHECKED BY: | AD |
| SUPV: | |
| DATE: | 03/05/2019 |


HAWAII ENGINEERING GROUP, Inc.
Civil & Structural Engineers
1088 BISHOP STREET #2506
HONOLULU, HI 96813
Tel: 808-533-2092


JOB NO.

SHEET C052

59 OF 225 SHTS

FILE ___ DRAWER ___ ___ FOLDER ___ ___

Plot date: 15-Apr-2020

Full Size Plot

Plot date: 15-Apr-2020
Full Size Plot

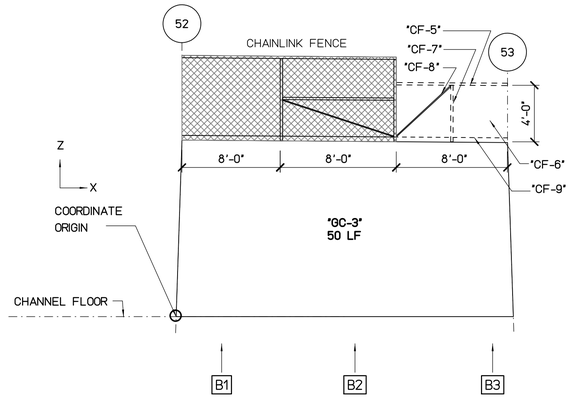


## WALL "B" FLATTEN VIEW

SCALE : 3/16" = 1'-0"

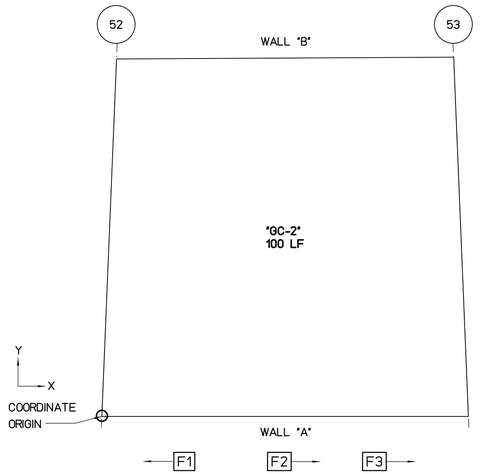


## FLOOR PLAN VIEW

SCALE : 3/16" = 1'-0"

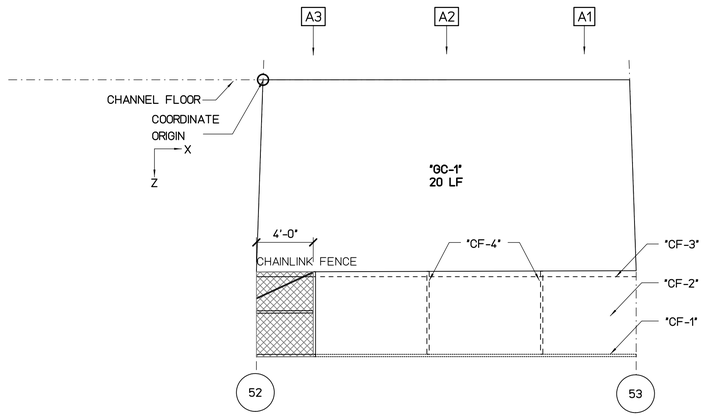


## WALL "A" FLATTEN VIEW

SCALE : 3/16" = 1'-0"

REPAIR LEGEND AND NOTES:

- [2] CRACK AND SPALL REPAIR TYPES, SEE SHEETS SR201 AND SR202 FOR DETAILS. TYPE [*] INDICATES NO-REPAIR
- (A) CHAINLINK FENCE REPAIR TYPES, SEE SHEETS SF201 AND SF202 FOR DETAILS
- 1.0 TOP OF WALL LEANING DISTANCE TOWARD CHANNEL IN INCHES, SEE SHEETS SL101 TO SL207 FOR CONCRETE LINING

PHOTO LEGEND:

- [A1] WALL "A" ELEVATION PHOTO IDENTIFICATION SEE FLATTEN VIEW FOR PHOTO LOCATION
- [B1] WALL "B" ELEVATION PHOTO IDENTIFICATION SEE FLATTEN VIEW FOR PHOTO LOCATION
- [F1] CHANNEL FLOOR PHOTO IDENTIFICATION SEE FLOOR PLAN VIEW FOR PHOTO LOCATION

B1



B2



B3



F1



F2



F3



A1



A2



A3



### SPALL REPAIR CHART

| MARK | LOCATION | REPAIR TYPE | SPALL DIMENSION L | SPALL DIMENSION W | SPALL DIMENSION D | SPALL VOLUME | SPALL CENTER COORDINATE X | SPALL CENTER COORDINATE Y OR Z | RATING |
|---|---|---|---|---|---|---|---|---|---|
| | | | | | | | | | |
| | | | | | | | | | |
| | | | | | | | | | |
| | | | | | | | | | |
| | | | | | | | | | |
| | | | | | | | | | |
| | | | | | | | | | |
| | | | | | | | | | |

### CHAINLINK FENCE REPAIR CHART

| MARK | LOCATION | REPAIR TYPE | POSTS | TOP RAIL | BOTTOM WIRE | BRACE | FABRIC |
|---|---|---|---|---|---|---|---|
| *CF-1* | WALL *A* | (C) | - | MISSING 23' | - | - | - |
| *CF-2* | WALL *A* | (E) | - | - | - | - | MISSING 23'x6' |
| *CF-3* | WALL *A* | (D) | - | - | MISSING 23' | - | - |
| *CF-4* | WALL *A* | (A) | MISSING 1 | - | - | - | - |
| *CF-5* | WALL *B* | (C) | - | MISSING 7' | - | - | - |
| *CF-6* | WALL *B* | (E) | - | - | - | - | MISSING 8'x4' |
| *CF-7* | WALL *B* | (A) | MISSING 1 | - | - | - | - |
| *CF-8* | WALL *B* | (B) | - | - | - | MISSING 1 | - |
| *CF-9* | WALL *B* | (D) | - | - | MISSING 8' | - | - |
| | | | | | | | |

NOT IN CONTRACT

### CRACK REPAIR CHART

| MARK | LOCATION | REPAIR TYPE | GENERAL CRACKS (LF) | MAJOR CRACKS WIDTH (IN) | MAJOR CRACKS LENGTH (FT) | MAJOR CRACKS START PNT X | MAJOR CRACKS START PNT Y,Z | MAJOR CRACKS END PNT X | MAJOR CRACKS END PNT Y,Z | RATING |
|---|---|---|---|---|---|---|---|---|---|---|
| *GC-1* | WALL *A* | [*] | 20 | - | - | - | - | - | - | 8 |
| *GC-2* | FLOOR | [*] | 100 | - | - | - | - | - | - | 8 |
| *GC-3* | WALL *B* | [*] | 50 | - | - | - | - | - | - | 8 |
| | | | | | | | | | | |
| | | | | | | | | | | |
| | | | | | | | | | | |
| | | | | | | | | | | |

GRAPHIC SCALES:

0 1' 2' 4' 8' 12' 16'

3/16"=1'-0"

| REVISION NO. | DATE | REVISIONS | BY |
|---|---|---|---|
| | | | |

ATHER R. DAR
LICENSED PROFESSIONAL ENGINEER
No. 7808-S
HAWAII U.S.A.

Exp. Date: 4-30-20

THIS WORK WAS PREPARED BY ME OR UNDER MY SUPERVISION AND CONSTRUCTION OF THIS PROJECT WILL BE UNDER MY OBSERVATION

DEPARTMENT OF HAWAIIAN HOMELAND

NANAKULI FLOOD CONTROL CHANNEL IMPROVEMENTS
NANAKULI VALLEY, OAHU HAWAII

CHANNEL SEGMENT [053] REPAIR DETAILS

| | |
|---|---|
| DESIGNED BY: | TTP |
| DRAWN BY: | AK, AP, DL |
| CHECKED BY: | AD |
| SUPV: | |
| DATE: | 03/05/2019 |

HAWAII ENGINEERING GROUP, Inc.
Civil & Structural Engineers
1088 BISHOP STREET #2506
HONOLULU, HI 96813
Tel: 808-533-2092

JOB NO.

SHEET C053
60 OF 225 SHTS

FILE ___ DRAWER ___ ___ FOLDER ___ ___

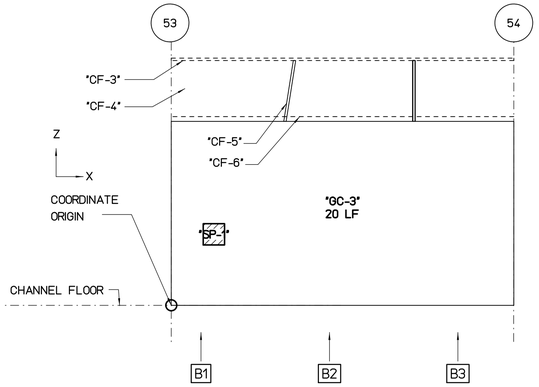


WALL "B" FLATTEN VIEW

SCALE : 3/16" = 1'-0"

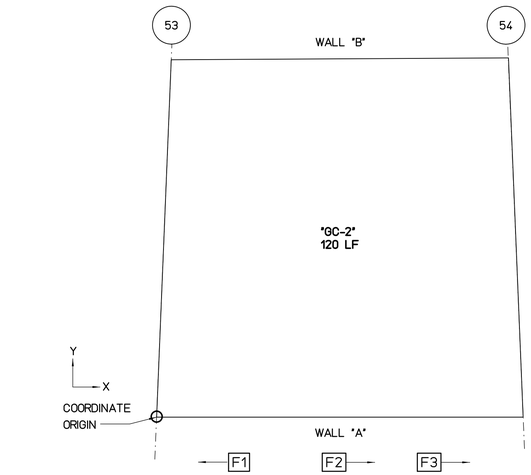


FLOOR PLAN VIEW

SCALE : 3/16" = 1'-0"

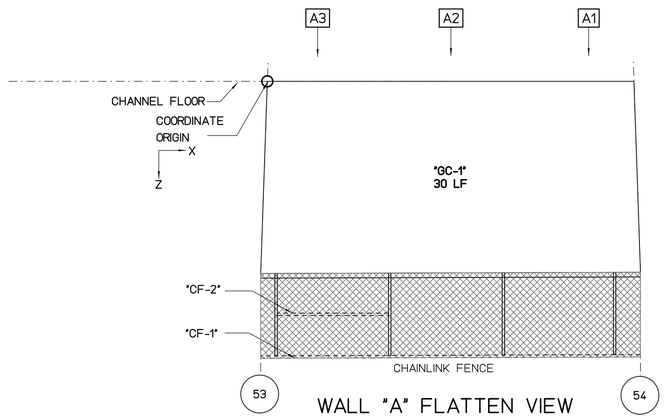


WALL "A" FLATTEN VIEW

SCALE : 3/16" = 1'-0"

REPAIR LEGEND AND NOTES:

- 2 — CRACK AND SPALL REPAIR TYPES, SEE SHEETS SR201 AND SR202 FOR DETAILS. TYPE [*] INDICATES NO-REPAIR
- (A) — CHAINLINK FENCE REPAIR TYPES, SEE SHEETS SF201 AND SF202 FOR DETAILS
- 1.0 — TOP OF WALL LEANING DISTANCE TOWARD CHANNEL IN INCHES, SEE SHEETS SL101 TO SL207 FOR CONCRETE LINING

PHOTO LEGEND:

- A1 — WALL "A" ELEVATION PHOTO IDENTIFICATION SEE FLATTEN VIEW FOR PHOTO LOCATION
- B1 — WALL "B" ELEVATION PHOTO IDENTIFICATION SEE FLATTEN VIEW FOR PHOTO LOCATION
- F1 — CHANNEL FLOOR PHOTO IDENTIFICATION SEE FLOOR PLAN VIEW FOR PHOTO LOCATION

B1



B2



B3



F1



F2



F3



A1



A2



A3



SPALL REPAIR CHART

| MARK | LOCATION | REPAIR TYPE | SPALL DIMENSION | | | SPALL VOLUME | SPALL CENTER COORDINATE | | RATING |
|---|---|---|---|---|---|---|---|---|---|
| | | | L | W | D | | X | Y OR Z | |
| "SP-1" | WALL "B" | 3 | 18 | 18 | 2 | 648 | 3 | 5 | 7 |

CHAINLINK FENCE REPAIR CHART

| MARK | LOCATION | REPAIR TYPE | POSTS | TOP RAIL | BOTTOM WIRE | BRACE | FABRIC |
|---|---|---|---|---|---|---|---|
| "CF-1" | WALL "A" | (C) | - | MISSING 27' | - | - | - |
| "CF-2" | WALL "A" | (B) | - | - | - | MISSING 1 | - |
| "CF-3" | WALL "B" | (C) | - | MISSING 25' | - | - | - |
| "CF-4" | WALL "B" | (E) | - | - | - | - | MISSING 25'x4' |
| "CF-5" | WALL "B" | (A) | BENT 1 | - | - | - | - |
| "CF-6" | WALL "B" | (D) | - | - | MISSING 25' | - | - |

CRACK REPAIR CHART

| MARK | LOCATION | REPAIR TYPE | GENERAL CRACKS (LF) | MAJOR CRACKS | | | | | | RATING |
|---|---|---|---|---|---|---|---|---|---|---|
| | | | | WIDTH (IN) | LENGTH (FT) | START PNT X | START PNT Y,Z | END PNT X | END PNT Y,Z | |
| "GC-1" | WALL "A" | * | 30 | - | - | - | - | - | - | 8 |
| "GC-2" | FLOOR | * | 120 | - | - | - | - | - | - | 8 |
| "GC-3" | WALL "B" | * | 20 | - | - | - | - | - | - | 8 |

GRAPHIC SCALES:

0 1' 2' 4' 8' 12' 16'

3/16"=1'-0"

| REVISION NO. | DATE | REVISIONS | BY |
|---|---|---|---|
| | | | |

ATHER R. DAR
LICENSED PROFESSIONAL ENGINEER
No. 7808-S
HAWAII U.S.A.

Exp. Date: 4-30-20

THIS WORK WAS PREPARED BY ME OR UNDER MY SUPERVISION AND CONSTRUCTION OF THIS PROJECT WILL BE UNDER MY OBSERVATION

DEPARTMENT OF HAWAIIAN HOMELAND

# NANAKULI FLOOD CONTROL CHANNEL IMPROVEMENTS NANAKULI VALLEY, OAHU HAWAII

## CHANNEL SEGMENT 054 REPAIR DETAILS

| | |
|---|---|
| DESIGNED BY: | TTP |
| DRAWN BY: | AK, AP, DL |
| CHECKED BY: | AD |
| SUPV: | |
| DATE: | 03/05/2019 |


HAWAII ENGINEERING GROUP, Inc.
Civil & Structural Engineers
1088 BISHOP STREET #2506
HONOLULU, HI 96813
Tel: 808-533-2092


JOB NO.

SHEET C054
61 OF 225 SHTS

FILE ___ DRAWER ___ ___ FOLDER ___ ___

Plot date: 15-Apr-2020

Full Size Plot

Plot date: 15-Apr-2020
Full Size Plot

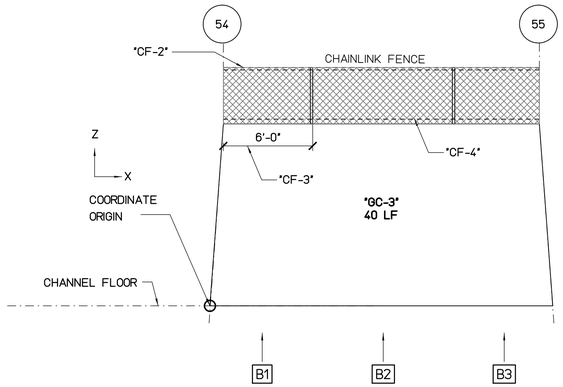


## WALL "B" FLATTEN VIEW

SCALE : 3/16" = 1'-0"

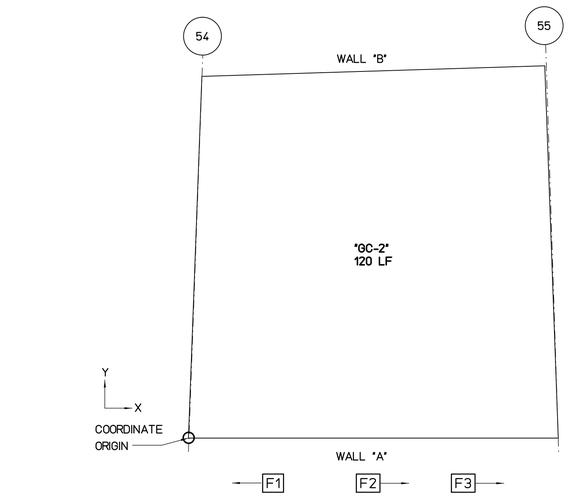


## FLOOR PLAN VIEW

SCALE : 3/16" = 1'-0"

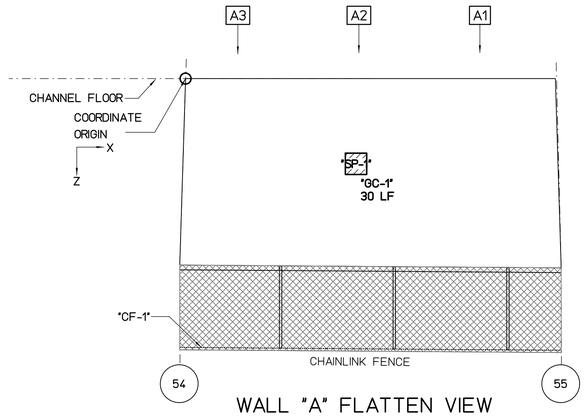


## WALL "A" FLATTEN VIEW

SCALE : 3/16" = 1'-0"

REPAIR LEGEND AND NOTES:

- 2 — CRACK AND SPALL REPAIR TYPES, SEE SHEETS SR201 AND SR202 FOR DETAILS. TYPE ⊠ INDICATES NO-REPAIR
- Ⓐ — CHAINLINK FENCE REPAIR TYPES, SEE SHEETS SF201 AND SF202 FOR DETAILS
- 1.0 — TOP OF WALL LEANING DISTANCE TOWARD CHANNEL IN INCHES, SEE SHEETS SL101 TO SL207 FOR CONCRETE LINING

PHOTO LEGEND:

- A1 — WALL "A" ELEVATION PHOTO IDENTIFICATION SEE FLATTEN VIEW FOR PHOTO LOCATION
- B1 — WALL "B" ELEVATION PHOTO IDENTIFICATION SEE FLATTEN VIEW FOR PHOTO LOCATION
- F1 — CHANNEL FLOOR PHOTO IDENTIFICATION SEE FLOOR PLAN VIEW FOR PHOTO LOCATION

B1



B2



B3



F1



F2



F3



A1



A2



A3



### SPALL REPAIR CHART

| MARK | LOCATION | REPAIR TYPE | SPALL DIMENSION L | SPALL DIMENSION W | SPALL DIMENSION D | SPALL VOLUME | SPALL CENTER COORDINATE X | SPALL CENTER COORDINATE Y OR Z | RATING |
|---|---|---|---|---|---|---|---|---|---|
| "SP-1" | WALL "A" | 3 | 18 | 18 | 2 | 648 | 12 | 6 | 7 |

### CHAINLINK FENCE REPAIR CHART

| MARK | LOCATION | REPAIR TYPE | POSTS | TOP RAIL | BOTTOM WIRE | BRACE | FABRIC |
|---|---|---|---|---|---|---|---|
| "CF-1" | WALL "A" | Ⓒ | - | MISSING 27' | - | - | - |
| "CF-2" | WALL "B" | Ⓒ | - | MISSING 23' | - | - | - |
| "CF-3" | WALL "B" | Ⓔ | - | - | - | - | DAMAGED 6'x4' |
| "CF-4" | WALL "B" | Ⓓ | - | - | MISSING 23' | - | - |

### CRACK REPAIR CHART

| MARK | LOCATION | REPAIR TYPE | GENERAL CRACKS (LF) | MAJOR CRACKS WIDTH (IN) | MAJOR CRACKS LENGTH (FT) | MAJOR CRACKS START PNT X | MAJOR CRACKS START PNT Y,Z | MAJOR CRACKS END PNT X | MAJOR CRACKS END PNT Y,Z | RATING |
|---|---|---|---|---|---|---|---|---|---|---|
| "GC-1" | WALL "A" | ⊠ | 30 | - | - | - | - | - | - | 8 |
| "GC-2" | FLOOR | ⊠ | 120 | - | - | - | - | - | - | 8 |
| "GC-3" | WALL "B" | ⊠ | 40 | - | - | - | - | - | - | 8 |

GRAPHIC SCALES:

0 1' 2' 4' 8' 12' 16'

3/16"=1'-0"

| REVISION NO. | DATE | REVISIONS | BY |
|---|---|---|---|

ATHER R. DAR
LICENSED PROFESSIONAL ENGINEER
No. 7808-S
HAWAII U.S.A.

Exp. Date: 4-30-20

THIS WORK WAS PREPARED BY ME OR UNDER MY SUPERVISION AND CONSTRUCTION OF THIS PROJECT WILL BE UNDER MY OBSERVATION

DEPARTMENT OF HAWAIIAN HOMELAND

# NANAKULI FLOOD CONTROL CHANNEL IMPROVEMENTS NANAKULI VALLEY, OAHU HAWAII

## CHANNEL SEGMENT 055 REPAIR DETAILS

DESIGNED BY: TTP
DRAWN BY: AK, AP, DL
CHECKED BY: AD
SUPV:
DATE: 03/05/2019

HAWAII ENGINEERING GROUP, Inc.
Civil & Structural Engineers
1088 BISHOP STREET #2506
HONOLULU, HI 96813
Tel: 808-533-2092

JOB NO.

SHEET C055
62 OF 225 SHTS

FILE ___ DRAWER ___ ___ FOLDER ___ ___

Plot date: 15-Apr-2020
Full Size Plot

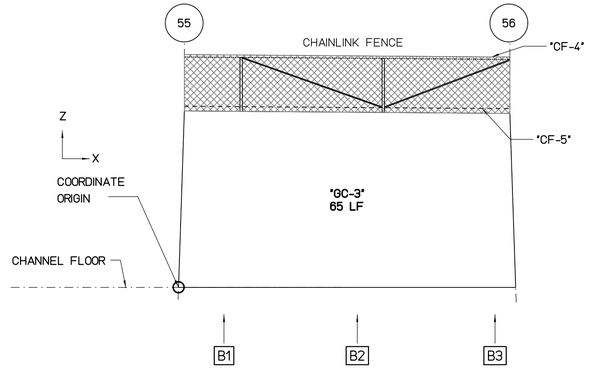


## WALL "B" FLATTEN VIEW

SCALE : 3/16" = 1'-0"

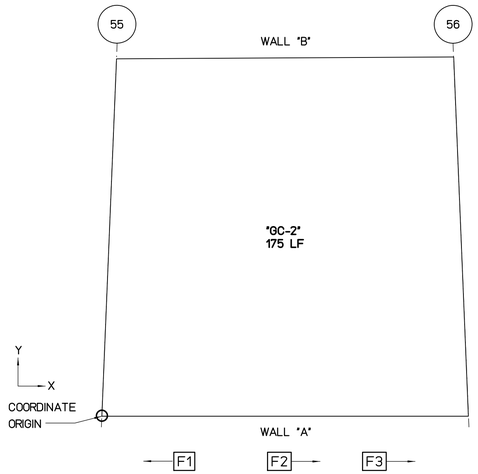


## FLOOR PLAN VIEW

SCALE : 3/16" = 1'-0"

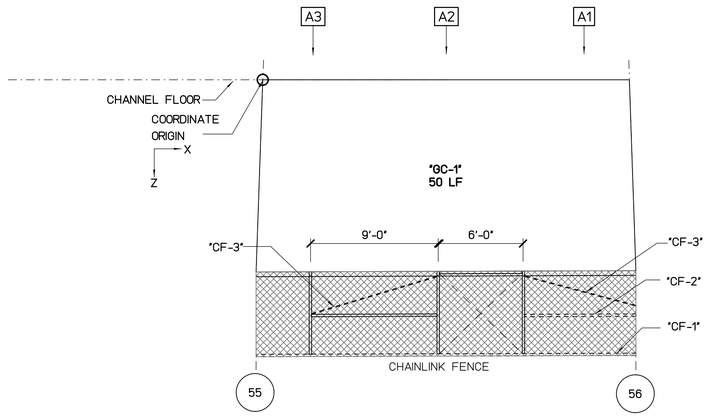


## WALL "A" FLATTEN VIEW

SCALE : 3/16" = 1'-0"

REPAIR LEGEND AND NOTES:

- 2 — CRACK AND SPALL REPAIR TYPES, SEE SHEETS SR201 AND SR202 FOR DETAILS. TYPE [*] INDICATES NO-REPAIR
- (A) — CHAINLINK FENCE REPAIR TYPES, SEE SHEETS SF201 AND SF202 FOR DETAILS
- 1.0 — TOP OF WALL LEANING DISTANCE TOWARD CHANNEL IN INCHES, SEE SHEETS SL101 TO SL207 FOR CONCRETE LINING

PHOTO LEGEND:

- A1 — WALL "A" ELEVATION PHOTO IDENTIFICATION SEE FLATTEN VIEW FOR PHOTO LOCATION
- B1 — WALL "B" ELEVATION PHOTO IDENTIFICATION SEE FLATTEN VIEW FOR PHOTO LOCATION
- F1 — CHANNEL FLOOR PHOTO IDENTIFICATION SEE FLOOR PLAN VIEW FOR PHOTO LOCATION

B1



B2



B3



F1



F2



F3



A1



A2



A3



### SPALL REPAIR CHART

| MARK | LOCATION | REPAIR TYPE | SPALL DIMENSION | | | SPALL VOLUME | SPALL CENTER COORDINATE | | RATING |
|---|---|---|---|---|---|---|---|---|---|
| | | | L | W | D | | X | Y OR Z | |
| | | | | | | | | | |
| | | | | | | | | | |
| | | | | | | | | | |
| | | | | | | | | | |
| | | | | | | | | | |
| | | | | | | | | | |
| | | | | | | | | | |
| | | | | | | | | | |

### CHAINLINK FENCE REPAIR CHART

| MARK | LOCATION | REPAIR TYPE | POSTS | TOP RAIL | BOTTOM WIRE | BRACE | FABRIC |
|---|---|---|---|---|---|---|---|
| "CF-1" | WALL "A" | (C) | - | MISSING 27' | - | - | - |
| "CF-2" | WALL "A" | (B) | - | - | - | MISSING 1 | - |
| "CF-3" | WALL "A" | (B) | - | - | - | MISSING 2 | - |
| "CF-4" | WALL "B" | (C) | - | MISSING 23' | - | - | - |
| "CF-5" | WALL "B" | (D) | - | - | MISSING 23' | - | - |
| | | | | | | | |
| | | | | | | | |
| | | | | | | | |
| | | | | | | | |

### CRACK REPAIR CHART

| MARK | LOCATION | REPAIR TYPE | GENERAL CRACKS (LF) | MAJOR CRACKS | | | | | | RATING |
|---|---|---|---|---|---|---|---|---|---|---|
| | | | | WIDTH (IN) | LENGTH (FT) | START PNT | | END PNT | | |
| | | | | | | X | Y,Z | X | Y,Z | |
| "GC-1" | WALL "A" | [*] | 50 | - | - | - | - | - | - | 8 |
| "GC-2" | FLOOR | [*] | 175 | - | - | - | - | - | - | 8 |
| "GC-3" | WALL "B" | [*] | 65 | - | - | - | - | - | - | 8 |
| | | | | | | | | | | |
| | | | | | | | | | | |
| | | | | | | | | | | |
| | | | | | | | | | | |

GRAPHIC SCALES:

0 1' 2' 4' 8' 12' 16'

3/16"=1'-0"

| REVISION NO. | DATE | REVISIONS | BY |
|---|---|---|---|
| | | | |

ATHER R. DAR
LICENSED PROFESSIONAL ENGINEER
No. 7808-S
HAWAII U.S.A.

Exp. Date: 4-30-20

THIS WORK WAS PREPARED BY ME OR UNDER MY SUPERVISION AND CONSTRUCTION OF THIS PROJECT WILL BE UNDER MY OBSERVATION

DEPARTMENT OF HAWAIIAN HOMELAND

# NANAKULI FLOOD CONTROL CHANNEL IMPROVEMENTS NANAKULI VALLEY, OAHU HAWAII

## CHANNEL SEGMENT 056 REPAIR DETAILS

| | |
|---|---|
| DESIGNED BY: | TTP |
| DRAWN BY: | AK, AP, DL |
| CHECKED BY: | AD |
| SUPV: | |
| DATE: | 03/05/2019 |

HAWAII ENGINEERING GROUP, Inc.
Civil & Structural Engineers
1088 BISHOP STREET #2506
HONOLULU, HI 96813
Tel: 808-533-2092

JOB NO.

SHEET C056
63 OF 225 SHTS

FILE ___ DRAWER ___ ___ FOLDER ___ ___

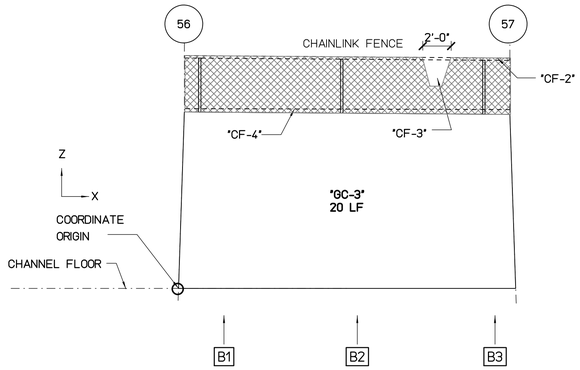


## WALL "B" FLATTEN VIEW

SCALE : 3/16" = 1'-0"

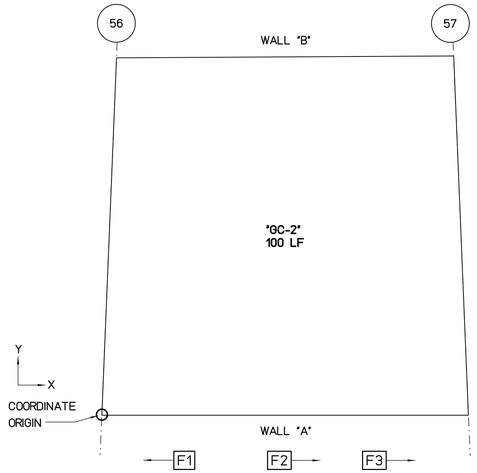


## FLOOR PLAN VIEW

SCALE : 3/16" = 1'-0"

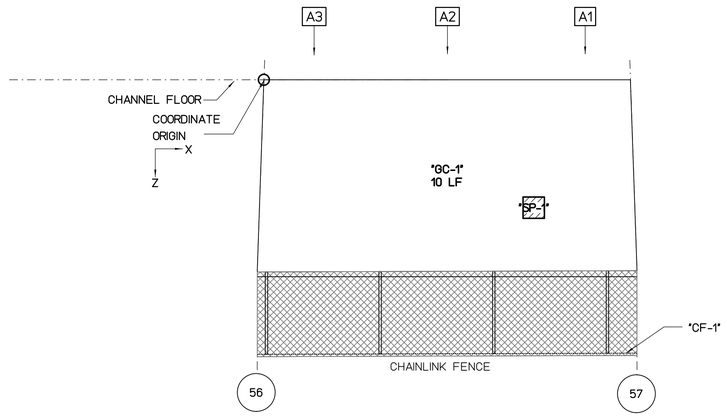


## WALL "A" FLATTEN VIEW

SCALE : 3/16" = 1'-0"

REPAIR LEGEND AND NOTES:

- [2] CRACK AND SPALL REPAIR TYPES, SEE SHEETS SR201 AND SR202 FOR DETAILS. TYPE [*] INDICATES NO-REPAIR
- (A) CHAINLINK FENCE REPAIR TYPES, SEE SHEETS SF201 AND SF202 FOR DETAILS
- [1.0] TOP OF WALL LEANING DISTANCE TOWARD CHANNEL IN INCHES, SEE SHEETS SL101 TO SL207 FOR CONCRETE LINING

PHOTO LEGEND:

- [A1] WALL "A" ELEVATION PHOTO IDENTIFICATION SEE FLATTEN VIEW FOR PHOTO LOCATION
- [B1] WALL "B" ELEVATION PHOTO IDENTIFICATION SEE FLATTEN VIEW FOR PHOTO LOCATION
- [F1] CHANNEL FLOOR PHOTO IDENTIFICATION SEE FLOOR PLAN VIEW FOR PHOTO LOCATION

B1



B2



B3



F1



F2



F3



A1



A2



A3



### SPALL REPAIR CHART

| MARK | LOCATION | REPAIR TYPE | SPALL DIMENSION L | SPALL DIMENSION W | SPALL DIMENSION D | SPALL VOLUME | SPALL CENTER COORDINATE X | SPALL CENTER COORDINATE Y OR Z | RATING |
|---|---|---|---|---|---|---|---|---|---|
| "SP-1" | WALL "A" | [3] | 18 | 18 | 2 | 648 | 19 | 9 | 7 |

### CHAINLINK FENCE REPAIR CHART

| MARK | LOCATION | REPAIR TYPE | POSTS | TOP RAIL | BOTTOM WIRE | BRACE | FABRIC |
|---|---|---|---|---|---|---|---|
| "CF-1" | WALL "A" | (C) | - | MISSING 27' | - | - | - |
| "CF-2" | WALL "B" | (C) | - | MISSING 23' | - | - | - |
| "CF-3" | WALL "B" | (E) | - | - | - | - | DAMAGED 2'x2' |
| "CF-4" | WALL "B" | (D) | - | - | MISSING 23' | - | - |

### CRACK REPAIR CHART

| MARK | LOCATION | REPAIR TYPE | GENERAL CRACKS (LF) | MAJOR CRACKS WIDTH (IN) | MAJOR CRACKS LENGTH (FT) | MAJOR CRACKS START PNT X | MAJOR CRACKS START PNT Y,Z | MAJOR CRACKS END PNT X | MAJOR CRACKS END PNT Y,Z | RATING |
|---|---|---|---|---|---|---|---|---|---|---|
| "GC-1" | WALL "A" | [*] | 10 | - | - | - | - | - | - | 8 |
| "GC-2" | FLOOR | [*] | 100 | - | - | - | - | - | - | 8 |
| "GC-3" | WALL "B" | [*] | 20 | - | - | - | - | - | - | 8 |

GRAPHIC SCALES:

0 1' 2' 4' 8' 12' 16'

3/16"=1'-0"

| REVISION NO. | DATE | REVISIONS | BY |
|---|---|---|---|

ATHER R. DAR
LICENSED PROFESSIONAL ENGINEER
No. 7808-S
HAWAII U.S.A.

Exp. Date: 4-30-20

THIS WORK WAS PREPARED BY ME OR UNDER MY SUPERVISION AND CONSTRUCTION OF THIS PROJECT WILL BE UNDER MY OBSERVATION

DEPARTMENT OF HAWAIIAN HOMELAND

NANAKULI FLOOD CONTROL CHANNEL IMPROVEMENTS NANAKULI VALLEY, OAHU HAWAII

CHANNEL SEGMENT [057] REPAIR DETAILS

| | |
|---|---|
| DESIGNED BY: | TTP |
| DRAWN BY: | AK, AP, DL |
| CHECKED BY: | AD |
| SUPV: | |
| DATE: | 03/05/2019 |

HAWAII ENGINEERING GROUP, Inc.
Civil & Structural Engineers
1088 BISHOP STREET #2506
HONOLULU, HI 96813
Tel: 808-533-2092

JOB NO.

SHEET C057
64 OF 225 SHTS

FILE ___ DRAWER ___ ___ FOLDER ___ ___

Plot date: 15-Apr-2020

Full Size Plot

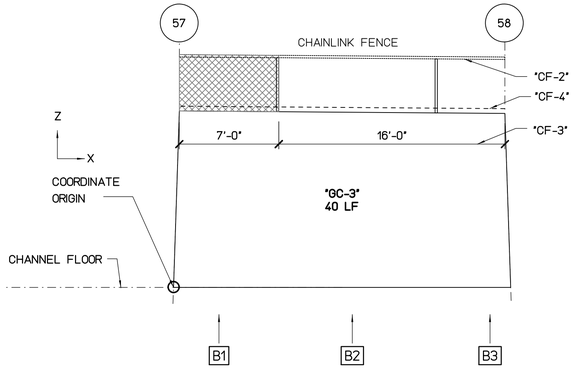


## WALL "B" FLATTEN VIEW

SCALE : 3/16" = 1'-0"

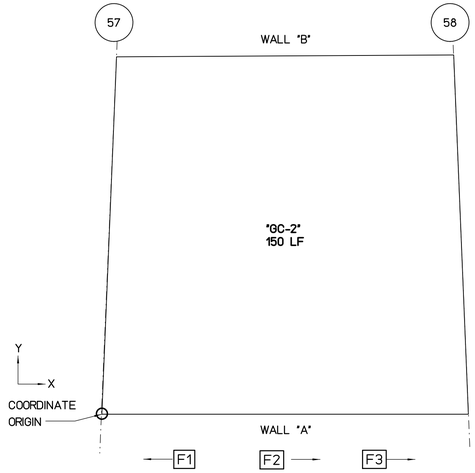


## FLOOR PLAN VIEW

SCALE : 3/16" = 1'-0"

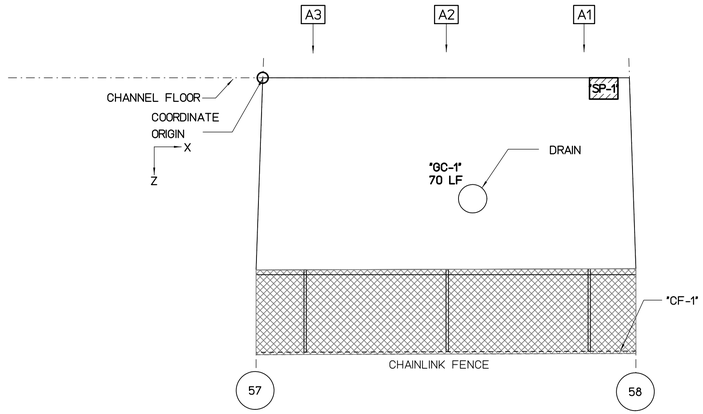


## WALL "A" FLATTEN VIEW

SCALE : 3/16" = 1'-0"

REPAIR LEGEND AND NOTES:

- 2 — CRACK AND SPALL REPAIR TYPES, SEE SHEETS SR201 AND SR202 FOR DETAILS. TYPE ⊠ INDICATES NO-REPAIR
- Ⓐ — CHAINLINK FENCE REPAIR TYPES, SEE SHEETS SF201 AND SF202 FOR DETAILS
- 1.0 — TOP OF WALL LEANING DISTANCE TOWARD CHANNEL IN INCHES, SEE SHEETS SL101 TO SL207 FOR CONCRETE LINING

PHOTO LEGEND:

- A1 — WALL "A" ELEVATION PHOTO IDENTIFICATION SEE FLATTEN VIEW FOR PHOTO LOCATION
- B1 — WALL "B" ELEVATION PHOTO IDENTIFICATION SEE FLATTEN VIEW FOR PHOTO LOCATION
- F1 — CHANNEL FLOOR PHOTO IDENTIFICATION SEE FLOOR PLAN VIEW FOR PHOTO LOCATION

B1



B2



B3



F1



F2



F3



A1



A2



A3



### SPALL REPAIR CHART

| MARK | LOCATION | REPAIR TYPE | SPALL DIMENSION L | SPALL DIMENSION W | SPALL DIMENSION D | SPALL VOLUME | SPALL CENTER COORDINATE X | SPALL CENTER COORDINATE Y OR Z | RATING |
|---|---|---|---|---|---|---|---|---|---|
| "SP-1" | WALL "A" | 3 | 24 | 18 | 2 | 864 | 24 | 0.7 | 6 |

### CHAINLINK FENCE REPAIR CHART

| MARK | LOCATION | REPAIR TYPE | POSTS | TOP RAIL | BOTTOM WIRE | BRACE | FABRIC |
|---|---|---|---|---|---|---|---|
| "CF-1" | WALL "A" | Ⓒ | - | MISSING 27' | - | - | - |
| "CF-2" | WALL "B" | Ⓒ | - | MISSING 23' | - | - | - |
| "CF-3" | WALL "B" | Ⓔ | - | - | - | - | MISSING 16'x4' |
| "CF-4" | WALL "B" | Ⓓ | - | - | MISSING 23' | - | - |

### CRACK REPAIR CHART

| MARK | LOCATION | REPAIR TYPE | GENERAL CRACKS (LF) | MAJOR CRACKS WIDTH (IN) | MAJOR CRACKS LENGTH (FT) | MAJOR CRACKS START PNT X | MAJOR CRACKS START PNT Y,Z | MAJOR CRACKS END PNT X | MAJOR CRACKS END PNT Y,Z | RATING |
|---|---|---|---|---|---|---|---|---|---|---|
| "GC-1" | WALL "A" | ⊠ | 70 | - | - | - | - | - | - | 8 |
| "GC-2" | FLOOR | ⊠ | 150 | - | - | - | - | - | - | 8 |
| "GC-3" | WALL "B" | ⊠ | 40 | - | - | - | - | - | - | 8 |

GRAPHIC SCALES:

0 1' 2' 4' 8' 12' 16'

3/16"=1'-0"

| REVISION NO. | DATE | REVISIONS | BY |
|---|---|---|---|
| | | | |

ATHER R. DAR
LICENSED PROFESSIONAL ENGINEER
No. 7808-S
HAWAII U.S.A.
Exp. Date: 4-30-20

THIS WORK WAS PREPARED BY ME OR UNDER MY SUPERVISION AND CONSTRUCTION OF THIS PROJECT WILL BE UNDER MY OBSERVATION

DEPARTMENT OF HAWAIIAN HOMELAND

NANAKULI FLOOD CONTROL CHANNEL IMPROVEMENTS
NANAKULI VALLEY, OAHU HAWAII

CHANNEL SEGMENT 058 REPAIR DETAILS

| | |
|---|---|
| DESIGNED BY: | TTP |
| DRAWN BY: | AK, AP, DL |
| CHECKED BY: | AD |
| SUPV: | |
| DATE: | 03/05/2019 |

HAWAII ENGINEERING GROUP, Inc.
Civil & Structural Engineers
1088 BISHOP STREET #2506
HONOLULU, HI 96813
Tel: 808-533-2092

JOB NO.

SHEET C058
65 OF 225 SHTS

FILE ___ DRAWER ___ ___ FOLDER ___ ___

Plot date: 15-Apr-2020

Full Size Plot

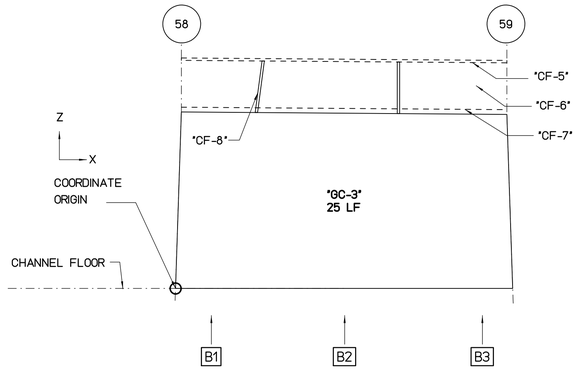


## WALL "B" FLATTEN VIEW

SCALE : 3/16" = 1'-0"

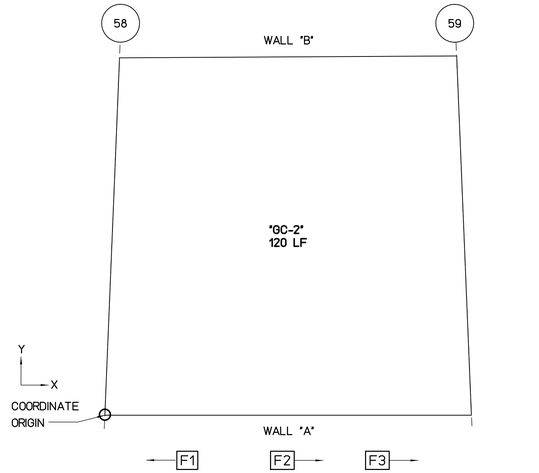


## FLOOR PLAN VIEW

SCALE : 3/16" = 1'-0"

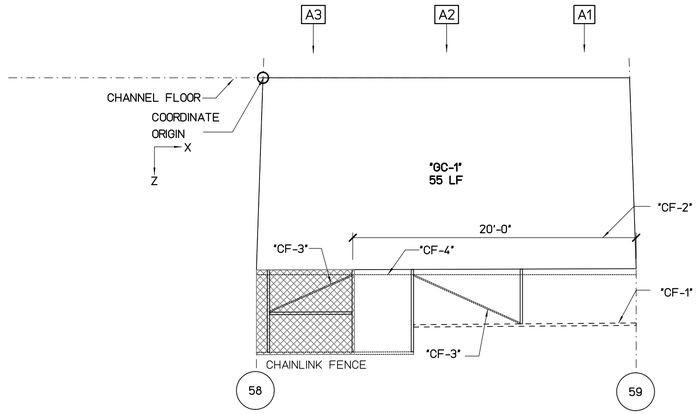


## WALL "A" FLATTEN VIEW

SCALE : 3/16" = 1'-0"

REPAIR LEGEND AND NOTES:

- [2] CRACK AND SPALL REPAIR TYPES, SEE SHEETS SR201 AND SR202 FOR DETAILS. TYPE [*] INDICATES NO-REPAIR
- (A) CHAINLINK FENCE REPAIR TYPES, SEE SHEETS SF201 AND SF202 FOR DETAILS
- 1.0 TOP OF WALL LEANING DISTANCE TOWARD CHANNEL IN INCHES, SEE SHEETS SL101 TO SL207 FOR CONCRETE LINING

PHOTO LEGEND:

- [A1] WALL "A" ELEVATION PHOTO IDENTIFICATION SEE FLATTEN VIEW FOR PHOTO LOCATION
- [B1] WALL "B" ELEVATION PHOTO IDENTIFICATION SEE FLATTEN VIEW FOR PHOTO LOCATION
- [F1] CHANNEL FLOOR PHOTO IDENTIFICATION SEE FLOOR PLAN VIEW FOR PHOTO LOCATION

B1



B2



B3



F1



F2



F3



A1



A2



A3



### SPALL REPAIR CHART

| MARK | LOCATION | REPAIR TYPE | SPALL DIMENSION | | | SPALL VOLUME | SPALL CENTER COORDINATE | | RATING |
|---|---|---|---|---|---|---|---|---|---|
| | | | L | W | D | | X | Y OR Z | |
| | | | | | | | | | |
| | | | | | | | | | |
| | | | | | | | | | |
| | | | | | | | | | |
| | | | | | | | | | |
| | | | | | | | | | |
| | | | | | | | | | |
| | | | | | | | | | |

### CHAINLINK FENCE REPAIR CHART

| MARK | LOCATION | REPAIR TYPE | POSTS | TOP RAIL | BOTTOM WIRE | BRACE | FABRIC |
|---|---|---|---|---|---|---|---|
| "CF-1" | WALL "A" | (C) | - | MISSING 27' | - | - | - |
| "CF-2" | WALL "A" | (E) | - | - | - | - | MISSING 20'x4' |
| "CF-3" | WALL "A" | (B) | - | - | - | MISSING 2 | - |
| "CF-4" | WALL "A" | (D) | - | - | MISSING 27' | - | - |
| "CF-5" | WALL "B" | (C) | - | MISSING 23' | - | - | - |
| "CF-6" | WALL "B" | (E) | - | - | - | - | MISSING 23'x4' |
| "CF-7" | WALL "B" | (D) | - | - | MISSING 23' | - | - |
| "CF-8" | WALL "B" | (A) | BENT 1 | - | - | - | - |
| | | | | | | | |
| | | | | | | | |

### CRACK REPAIR CHART

| MARK | LOCATION | REPAIR TYPE | GENERAL CRACKS (LF) | MAJOR CRACKS | | | | | | RATING |
|---|---|---|---|---|---|---|---|---|---|---|
| | | | | WIDTH (IN) | LENGTH (FT) | START PNT | | END PNT | | |
| | | | | | | X | Y,Z | X | Y,Z | |
| "GC-1" | WALL "A" | [*] | 55 | - | - | - | - | - | - | 8 |
| "GC-2" | FLOOR | [*] | 120 | - | - | - | - | - | - | 8 |
| "GC-3" | WALL "B" | [*] | 25 | - | - | - | - | - | - | 8 |
| | | | | | | | | | | |
| | | | | | | | | | | |
| | | | | | | | | | | |
| | | | | | | | | | | |

GRAPHIC SCALES:

0 1' 2' 4' 8' 12' 16'

3/16"=1'-0"

| REVISION NO. | DATE | REVISIONS | BY |
|---|---|---|---|
| | | | |

ATHER R. DAR
LICENSED PROFESSIONAL ENGINEER
No. 7808-S
HAWAII U.S.A.

Exp. Date: 4-30-20

THIS WORK WAS PREPARED BY ME OR UNDER MY SUPERVISION AND CONSTRUCTION OF THIS PROJECT WILL BE UNDER MY OBSERVATION

DEPARTMENT OF HAWAIIAN HOMELAND

# NANAKULI FLOOD CONTROL CHANNEL IMPROVEMENTS NANAKULI VALLEY, OAHU HAWAII

CHANNEL SEGMENT [059] REPAIR DETAILS

| | |
|---|---|
| DESIGNED BY: | TTP |
| DRAWN BY: | AK, AP, DL |
| CHECKED BY: | AD |
| SUPV: | |
| DATE: | 03/05/2019 |


HAWAII ENGINEERING GROUP, Inc.
Civil & Structural Engineers
1088 BISHOP STREET #2506
HONOLULU, HI 96813
Tel: 808-533-2092


JOB NO.

SHEET C059
66 OF 225 SHTS

FILE ___ DRAWER ___ ___ FOLDER ___ ___

Plot date: 15-Apr-2020

Full Size Plot

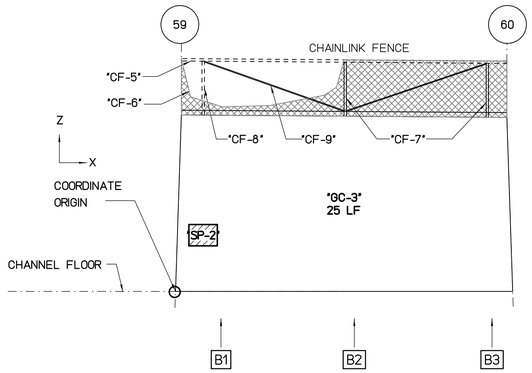


## WALL "B" FLATTEN VIEW

SCALE : 3/16" = 1'-0"

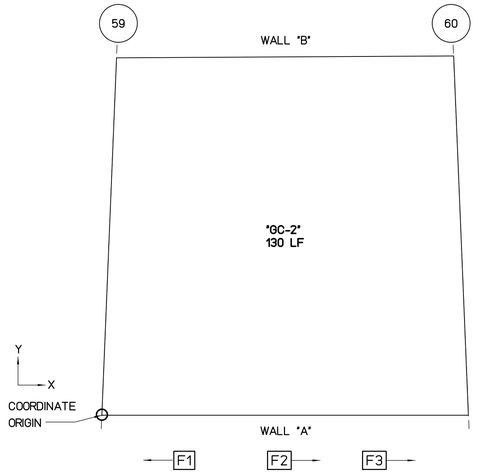


## FLOOR PLAN VIEW

SCALE : 3/16" = 1'-0"

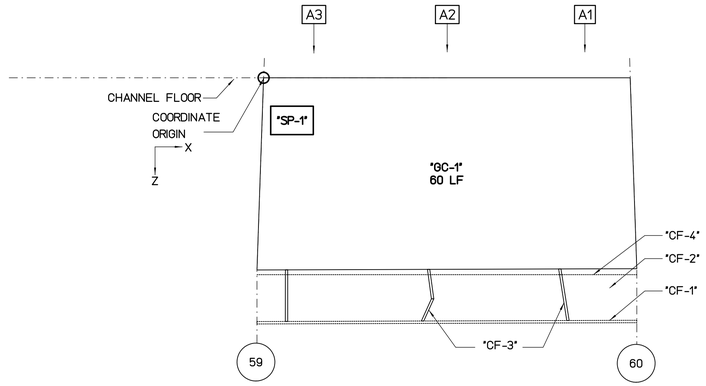


## WALL "A" FLATTEN VIEW

SCALE : 3/16" = 1'-0"

REPAIR LEGEND AND NOTES:

- [2] CRACK AND SPALL REPAIR TYPES, SEE SHEETS SR201 AND SR202 FOR DETAILS. TYPE [*] INDICATES NO-REPAIR
- (A) CHAINLINK FENCE REPAIR TYPES, SEE SHEETS SF201 AND SF202 FOR DETAILS
- [1.0] TOP OF WALL LEANING DISTANCE TOWARD CHANNEL IN INCHES, SEE SHEETS SL101 TO SL207 FOR CONCRETE LINING

PHOTO LEGEND:

- [A1] WALL "A" ELEVATION PHOTO IDENTIFICATION SEE FLATTEN VIEW FOR PHOTO LOCATION
- [B1] WALL "B" ELEVATION PHOTO IDENTIFICATION SEE FLATTEN VIEW FOR PHOTO LOCATION
- [F1] CHANNEL FLOOR PHOTO IDENTIFICATION SEE FLOOR PLAN VIEW FOR PHOTO LOCATION

B1



B2



B3



F1



F2



F3



A1



A2



A3



### SPALL REPAIR CHART

| MARK | LOCATION | REPAIR TYPE | SPALL DIMENSION L | SPALL DIMENSION W | SPALL DIMENSION D | SPALL VOLUME | SPALL CENTER COORDINATE X | SPALL CENTER COORDINATE Y OR Z | RATING |
|---|---|---|---|---|---|---|---|---|---|
| "SP-1" | WALL "A" | [3] | 36 | 24 | 2 | 1728 | 2 | 3 | 7 |
| "SP-2" | WALL "B" | [3] | 24 | 18 | 2 | 864 | 2 | 4 | 7 |

### CHAINLINK FENCE REPAIR CHART

| MARK | LOCATION | REPAIR TYPE | POSTS | TOP RAIL | BOTTOM WIRE | BRACE | FABRIC |
|---|---|---|---|---|---|---|---|
| "CF-1" | WALL "A" | (C) | - | MISSING 27' | - | - | - |
| "CF-2" | WALL "A" | (E) | - | - | - | - | MISSING 27'x4' |
| "CF-3" | WALL "A" | (A) | BENT 2 | - | - | - | - |
| "CF-4" | WALL "A" | (D) | - | - | MISSING 27' | - | - |
| "CF-5" | WALL "B" | (C) | - | MISSING 23' | - | - | - |
| "CF-6" | WALL "B" | (E) | - | - | - | - | DAMAGED 23'x4' |
| "CF-7" | WALL "B" | (A) | BENT 2 | - | - | - | - |
| "CF-8" | WALL "B" | (A) | MISSING 1 | - | - | - | - |
| "CF-9" | WALL "B" | (B) | - | - | - | MISSING 1 | - |

### CRACK REPAIR CHART

| MARK | LOCATION | REPAIR TYPE | GENERAL CRACKS (LF) | MAJOR CRACKS WIDTH (IN) | MAJOR CRACKS LENGTH (FT) | MAJOR CRACKS START PNT X | MAJOR CRACKS START PNT Y,Z | MAJOR CRACKS END PNT X | MAJOR CRACKS END PNT Y,Z | RATING |
|---|---|---|---|---|---|---|---|---|---|---|
| "GC-1" | WALL "A" | [*] | 60 | - | - | - | - | - | - | 8 |
| "GC-2" | FLOOR | [*] | 130 | - | - | - | - | - | - | 8 |
| "GC-3" | WALL "B" | [*] | 25 | - | - | - | - | - | - | 8 |

GRAPHIC SCALES:

0 1' 2' 4' 8' 12' 16'

3/16"=1'-0"

| REVISION NO. | DATE | REVISIONS | BY |
|---|---|---|---|

ARTHER R. DAR
LICENSED PROFESSIONAL ENGINEER
No. 7808-S
HAWAII U.S.A.

Exp. Date: 4-30-20

THIS WORK WAS PREPARED BY ME OR UNDER MY SUPERVISION AND CONSTRUCTION OF THIS PROJECT WILL BE UNDER MY OBSERVATION

DEPARTMENT OF HAWAIIAN HOMELAND

# NANAKULI FLOOD CONTROL CHANNEL IMPROVEMENTS NANAKULI VALLEY, OAHU HAWAII

## CHANNEL SEGMENT [060] REPAIR DETAILS

| | |
|---|---|
| DESIGNED BY: | TTP |
| DRAWN BY: | AK, AP, DL |
| CHECKED BY: | AD |
| SUPV: | |
| DATE: | 03/05/2019 |


HAWAII ENGINEERING GROUP, Inc.
Civil & Structural Engineers
1088 BISHOP STREET #2506
HONOLULU, HI 96813
Tel: 808-533-2092


JOB NO.

SHEET C060
67 OF 225 SHTS

FILE ___ ___ DRAWER ___ ___ ___ FOLDER ___ ___

Plot date: 15-Apr-2020

Full Size Plot

Plot date: 15-Apr-2020
Full Size Plot

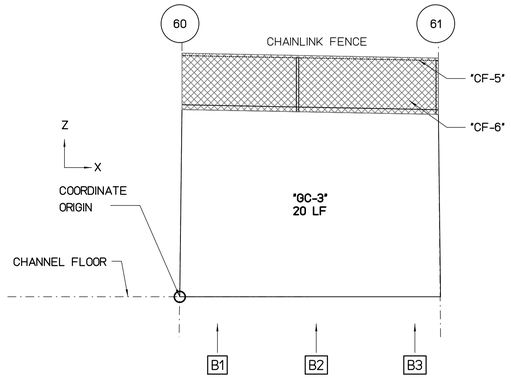


## WALL "B" FLATTEN VIEW

SCALE : 3/16" = 1'-0"

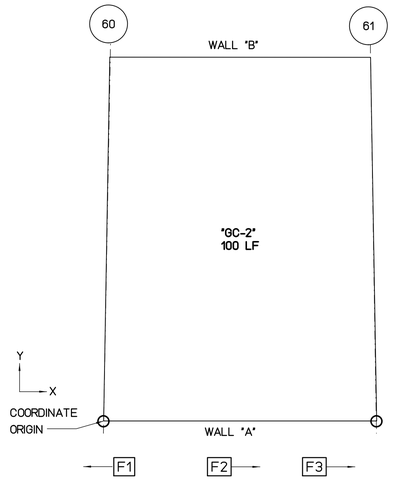


## FLOOR PLAN VIEW

SCALE : 3/16" = 1'-0"

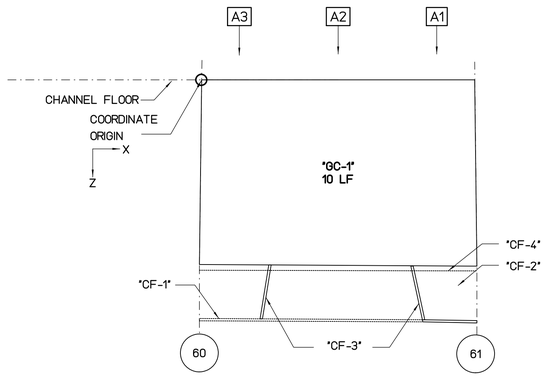


## WALL "A" FLATTEN VIEW

SCALE : 3/16" = 1'-0"

REPAIR LEGEND AND NOTES:

- 2 — CRACK AND SPALL REPAIR TYPES, SEE SHEETS SR201 AND SR202 FOR DETAILS. TYPE [*] INDICATES NO-REPAIR
- (A) — CHAINLINK FENCE REPAIR TYPES, SEE SHEETS SF201 AND SF202 FOR DETAILS
- 1.0 — TOP OF WALL LEANING DISTANCE TOWARD CHANNEL IN INCHES, SEE SHEETS SL101 TO SL207 FOR CONCRETE LINING

PHOTO LEGEND:

- A1 — WALL "A" ELEVATION PHOTO IDENTIFICATION SEE FLATTEN VIEW FOR PHOTO LOCATION
- B1 — WALL "B" ELEVATION PHOTO IDENTIFICATION SEE FLATTEN VIEW FOR PHOTO LOCATION
- F1 — CHANNEL FLOOR PHOTO IDENTIFICATION SEE FLOOR PLAN VIEW FOR PHOTO LOCATION

B1



B2



B3



F1



F2



F3



A1



A2



A3



### SPALL REPAIR CHART

| MARK | LOCATION | REPAIR TYPE | SPALL DIMENSION | | | SPALL VOLUME | SPALL CENTER COORDINATE | | RATING |
|---|---|---|---|---|---|---|---|---|---|
| | | | L | W | D | | X | Y OR Z | |
| | | | | | | | | | |
| | | | | | | | | | |
| | | | | | | | | | |
| | | | | | | | | | |
| | | | | | | | | | |
| | | | | | | | | | |
| | | | | | | | | | |
| | | | | | | | | | |

### CHAINLINK FENCE REPAIR CHART

| MARK | LOCATION | REPAIR TYPE | POSTS | TOP RAIL | BOTTOM WIRE | BRACE | FABRIC |
|---|---|---|---|---|---|---|---|
| "CF-1" | WALL "A" | (C) | - | MISSING 16' | - | - | - |
| "CF-2" | WALL "A" | (E) | - | - | - | - | MISSING 20'x4' |
| "CF-3" | WALL "A" | (A) | BENT 2 | - | - | - | - |
| "CF-4" | WALL "A" | (D) | - | - | MISSING 20' | - | - |
| "CF-5" | WALL "B" | (C) | - | MISSING 18' | - | - | - |
| "CF-6" | WALL "B" | (E) | - | - | - | - | DAMAGED 18'x4' |
| | | | | | | | |
| | | | | | | | |
| | | | | | | | |
| | | | | | | | |

### CRACK REPAIR CHART

| MARK | LOCATION | REPAIR TYPE | GENERAL CRACKS (LF) | MAJOR CRACKS | | | | | | RATING |
|---|---|---|---|---|---|---|---|---|---|---|
| | | | | WIDTH (IN) | LENGTH (FT) | START PNT X | START PNT Y,Z | END PNT X | END PNT Y,Z | |
| "GC-1" | WALL "A" | [*] | 10 | - | - | - | - | - | - | 8 |
| "GC-2" | FLOOR | [*] | 100 | - | - | - | - | - | - | 8 |
| "GC-3" | WALL "B" | [*] | 20 | - | - | - | - | - | - | 8 |
| | | | | | | | | | | |
| | | | | | | | | | | |
| | | | | | | | | | | |
| | | | | | | | | | | |

GRAPHIC SCALES:

0 1' 2' 4' 8' 12' 16'

3/16"=1'-0"

| REVISION NO. | DATE | REVISIONS | BY |
|---|---|---|---|
| | | | |

ATHER R. DAR
LICENSED PROFESSIONAL ENGINEER
No. 7808-S
HAWAII U.S.A.

Exp. Date: 4-30-20

THIS WORK WAS PREPARED BY ME OR UNDER MY SUPERVISION AND CONSTRUCTION OF THIS PROJECT WILL BE UNDER MY OBSERVATION

DEPARTMENT OF HAWAIIAN HOMELAND

# NANAKULI FLOOD CONTROL CHANNEL IMPROVEMENTS NANAKULI VALLEY, OAHU HAWAII

CHANNEL SEGMENT 061 REPAIR DETAILS

| | |
|---|---|
| DESIGNED BY: | TTP |
| DRAWN BY: | AK, AP, DL |
| CHECKED BY: | AD |
| SUPV: | |
| DATE: | 03/05/2019 |

HAWAII ENGINEERING GROUP, Inc.
Civil & Structural Engineers
1088 BISHOP STREET #2506
HONOLULU, HI 96813
Tel: 808-533-2092

JOB NO.

SHEET C061
68 OF 225 SHTS

FILE ___ DRAWER ___ ___ FOLDER ___ ___

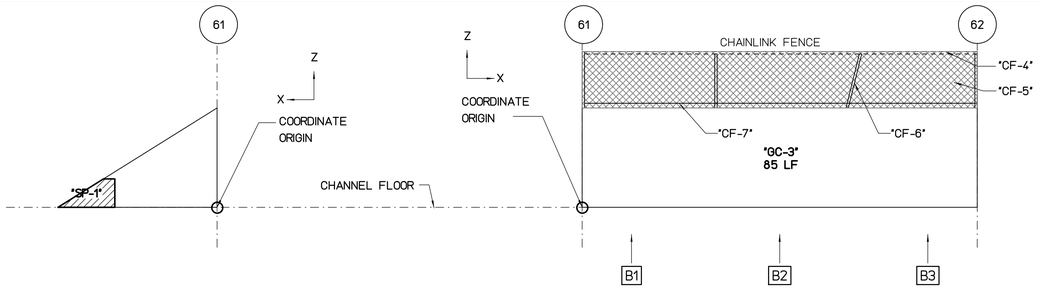


## WALL "C" FLATTEN VIEW

SCALE : 3/16" = 1'-0"

## WALL "B" FLATTEN VIEW

SCALE : 3/16" = 1'-0"

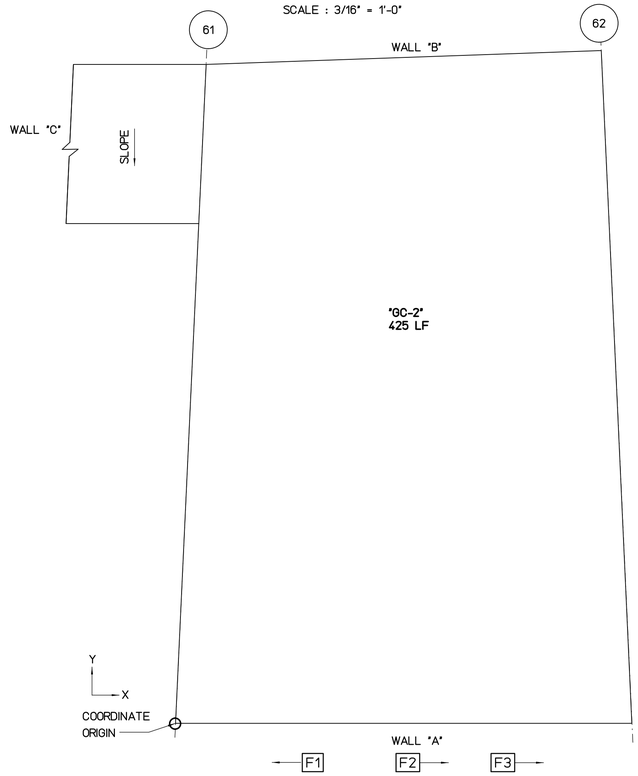


## FLOOR PLAN VIEW

SCALE : 3/16" = 1'-0"

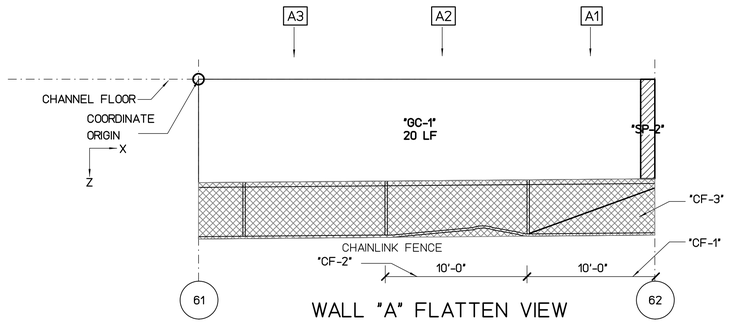


## WALL "A" FLATTEN VIEW

SCALE : 3/16" = 1'-0"

REPAIR LEGEND AND NOTES:

- [2] CRACK AND SPALL REPAIR TYPES, SEE SHEETS SR201 AND SR202 FOR DETAILS. TYPE [*] INDICATES NO-REPAIR
- (A) CHAINLINK FENCE REPAIR TYPES, SEE SHEETS SF201 AND SF202 FOR DETAILS
- [1.0] TOP OF WALL LEANING DISTANCE TOWARD CHANNEL IN INCHES, SEE SHEETS SL101 TO SL207 FOR CONCRETE LINING

PHOTO LEGEND:

- [A1] WALL "A" ELEVATION PHOTO IDENTIFICATION SEE FLATTEN VIEW FOR PHOTO LOCATION
- [B1] WALL "B" ELEVATION PHOTO IDENTIFICATION SEE FLATTEN VIEW FOR PHOTO LOCATION
- [F1] CHANNEL FLOOR PHOTO IDENTIFICATION SEE FLOOR PLAN VIEW FOR PHOTO LOCATION

B1



B2



B3



F1



F2



F3



A1



A2



A3



### SPALL REPAIR CHART

| MARK | LOCATION | REPAIR TYPE | SPALL DIMENSION L | SPALL DIMENSION W | SPALL DIMENSION D | SPALL VOLUME | SPALL CENTER COORDINATE X | SPALL CENTER COORDINATE Y OR Z | RATING |
|---|---|---|---|---|---|---|---|---|---|
| "SP-1" | WALL "B" | [3] | 48 | 24 | 5 | 5760 | 9.2 | 1 | 5 |
| "SP-2" | WALL "A" | [3] | 12 | 84 | 3 | 3024 | 31.6 | 3.5 | 6 |

### CHAINLINK FENCE REPAIR CHART

| MARK | LOCATION | REPAIR TYPE | POSTS | TOP RAIL | BOTTOM WIRE | BRACE | FABRIC |
|---|---|---|---|---|---|---|---|
| "CF-1" | WALL "A" | (C) | - | DAMAGED 10' | - | - | - |
| "CF-2" | WALL "A" | (C) | - | BENT 10' | - | - | - |
| "CF-3" | WALL "A" | (E) | - | - | - | - | DAMAGED 33"x4' |
| "CF-4" | WALL "B" | (C) | - | MISSING 28' | - | - | - |
| "CF-5" | WALL "B" | (E) | - | - | - | - | DAMAGED 28"x4' |
| "CF-6" | WALL "B" | (A) | BENT 1 | - | - | - | - |
| "CF-7" | WALL "B" | (D) | - | - | DAMAGED 28' | - | - |

### CRACK REPAIR CHART

| MARK | LOCATION | REPAIR TYPE | GENERAL CRACKS (LF) | MAJOR CRACKS WIDTH (IN) | MAJOR CRACKS LENGTH (FT) | MAJOR CRACKS START PNT X | MAJOR CRACKS START PNT Y,Z | MAJOR CRACKS END PNT X | MAJOR CRACKS END PNT Y,Z | RATING |
|---|---|---|---|---|---|---|---|---|---|---|
| "GC-1" | WALL "A" | [*] | 20 | - | - | - | - | - | - | 8 |
| "GC-2" | FLOOR | [*] | 425 | - | - | - | - | - | - | 8 |
| "GC-3" | WALL "B" | [*] | 85 | - | - | - | - | - | - | 8 |

GRAPHIC SCALES:

0 1' 2' 4' 8' 12' 16'

3/16"=1'-0"

| REVISION NO. | DATE | REVISIONS | BY |
|---|---|---|---|
| | | | |

ATHER R. DAR
LICENSED PROFESSIONAL ENGINEER
No. 7808-S
HAWAII U.S.A.
Exp. Date: 4-30-20

THIS WORK WAS PREPARED BY ME OR UNDER MY SUPERVISION AND CONSTRUCTION OF THIS PROJECT WILL BE UNDER MY OBSERVATION

DEPARTMENT OF HAWAIIAN HOMELAND

# NANAKULI FLOOD CONTROL CHANNEL IMPROVEMENTS NANAKULI VALLEY, OAHU HAWAII

CHANNEL SEGMENT [062] REPAIR DETAILS

| | |
|---|---|
| DESIGNED BY: | TTP |
| DRAWN BY: | AK, AP, DL |
| CHECKED BY: | AD |
| SUPV: | |
| DATE: | 03/05/2019 |


HAWAII ENGINEERING GROUP, Inc.
Civil & Structural Engineers
1088 BISHOP STREET #2506
HONOLULU, HI 96813
Tel: 808-533-2092


JOB NO.

SHEET C062
69 OF 225 SHTS

FILE ___ DRAWER ___ ___ FOLDER ___ ___

Plot date: 15-Apr-2020

Full Size Plot

Plot date: 15-Apr-2020
Full Size Plot

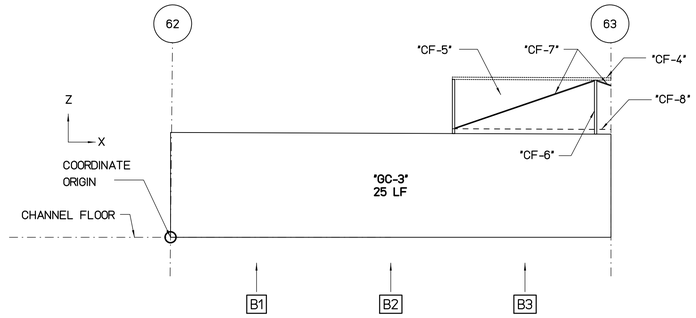


## WALL "B" FLATTEN VIEW

SCALE : 3/16" = 1'-0"

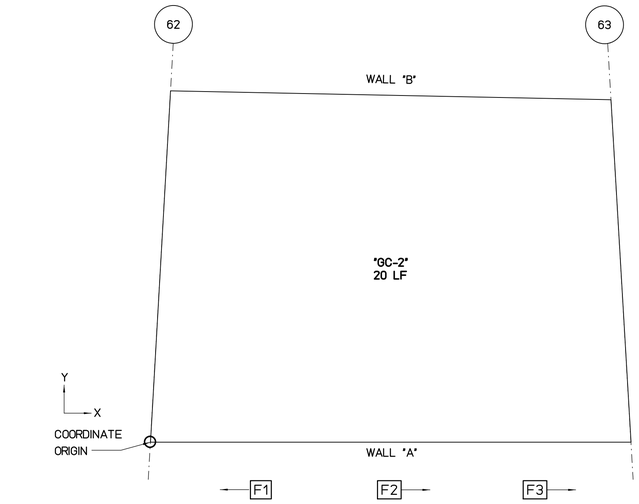


## FLOOR PLAN VIEW

SCALE : 3/16" = 1'-0"

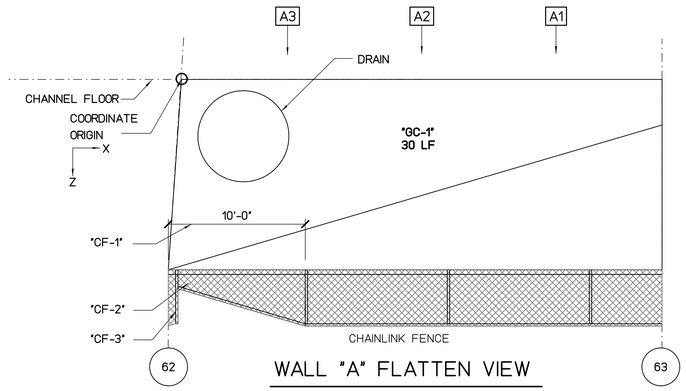


## WALL "A" FLATTEN VIEW

SCALE : 3/16" = 1'-0"

REPAIR LEGEND AND NOTES:

- [2] CRACK AND SPALL REPAIR TYPES, SEE SHEETS SR201 AND SR202 FOR DETAILS. TYPE [*] INDICATES NO-REPAIR
- (A) CHAINLINK FENCE REPAIR TYPES, SEE SHEETS SF201 AND SF202 FOR DETAILS
- [1.0] TOP OF WALL LEANING DISTANCE TOWARD CHANNEL IN INCHES, SEE SHEETS SL101 TO SL207 FOR CONCRETE LINING

PHOTO LEGEND:

- [A1] WALL "A" ELEVATION PHOTO IDENTIFICATION SEE FLATTEN VIEW FOR PHOTO LOCATION
- [B1] WALL "B" ELEVATION PHOTO IDENTIFICATION SEE FLATTEN VIEW FOR PHOTO LOCATION
- [F1] CHANNEL FLOOR PHOTO IDENTIFICATION SEE FLOOR PLAN VIEW FOR PHOTO LOCATION

B1



B2



B3



F1



F2



F3



A1



A2



A3



### SPALL REPAIR CHART

| MARK | LOCATION | REPAIR TYPE | SPALL DIMENSION | | | SPALL VOLUME | SPALL CENTER COORDINATE | | RATING |
|---|---|---|---|---|---|---|---|---|---|
| | | | L | W | D | | X | Y OR Z | |
| | | | | | | | | | |
| | | | | | | | | | |
| | | | | | | | | | |
| | | | | | | | | | |
| | | | | | | | | | |
| | | | | | | | | | |
| | | | | | | | | | |
| | | | | | | | | | |

### CHAINLINK FENCE REPAIR CHART

| MARK | LOCATION | REPAIR TYPE | POSTS | TOP RAIL | BOTTOM WIRE | BRACE | FABRIC |
|---|---|---|---|---|---|---|---|
| *CF-1* | WALL *A* | (C) | - | DAMAGED 10' | - | - | - |
| *CF-2* | WALL *A* | (E) | - | - | - | - | DAMAGED 10'x4' |
| *CF-3* | WALL *A* | (A) | DAMAGED 1 | - | - | - | - |
| *CF-4* | WALL *B* | (C) | - | MISSING 11' | - | - | - |
| *CF-5* | WALL *B* | (E) | - | - | - | - | MISSING 11'x4' |
| *CF-6* | WALL *B* | (A) | BENT 1 | - | - | - | - |
| *CF-7* | WALL *B* | (B) | - | - | - | DAMAGED 2 | - |
| *CF-8* | WALL *B* | (D) | - | - | MISSING 11' | - | - |
| | | | | | | | |
| | | | | | | | |

### CRACK REPAIR CHART

| MARK | LOCATION | REPAIR TYPE | GENERAL CRACKS (LF) | MAJOR CRACKS | | | | | | RATING |
|---|---|---|---|---|---|---|---|---|---|---|
| | | | | WIDTH (IN) | LENGTH (FT) | START PNT X | START PNT Y,Z | END PNT X | END PNT Y,Z | |
| *GC-1* | WALL *A* | [*] | 30 | - | - | - | - | - | - | 8 |
| *GC-2* | FLOOR | [*] | 20 | - | - | - | - | - | - | 8 |
| *GC-3* | WALL *B* | [*] | 25 | - | - | - | - | - | - | 8 |
| | | | | | | | | | | |
| | | | | | | | | | | |
| | | | | | | | | | | |
| | | | | | | | | | | |

GRAPHIC SCALES:

0 1' 2' 4' 8' 12' 16'

3/16"=1'-0"

| REVISION NO. | DATE | REVISIONS | BY |
|---|---|---|---|
| | | | |

ARTHUR R. DAR
LICENSED PROFESSIONAL ENGINEER
No. 7808-S
HAWAII U.S.A.

Exp. Date: 4-30-20

THIS WORK WAS PREPARED BY ME OR UNDER MY SUPERVISION AND CONSTRUCTION OF THIS PROJECT WILL BE UNDER MY OBSERVATION

DEPARTMENT OF HAWAIIAN HOMELAND

# NANAKULI FLOOD CONTROL CHANNEL IMPROVEMENTS NANAKULI VALLEY, OAHU HAWAII

## CHANNEL SEGMENT [063] REPAIR DETAILS

| | |
|---|---|
| DESIGNED BY: | TTP |
| DRAWN BY: | AK, AP, DL |
| CHECKED BY: | AD |
| SUPV: | |
| DATE: | 03/05/2019 |

HAWAII ENGINEERING GROUP, Inc.
Civil & Structural Engineers
1088 BISHOP STREET #2506
HONOLULU, HI 96813
Tel: 808-533-2092

JOB NO.

SHEET C063
70 OF 225 SHTS

FILE ___ DRAWER ___ ___ FOLDER ___ ___

Plot date: 15-Apr-2020

Full Size Plot

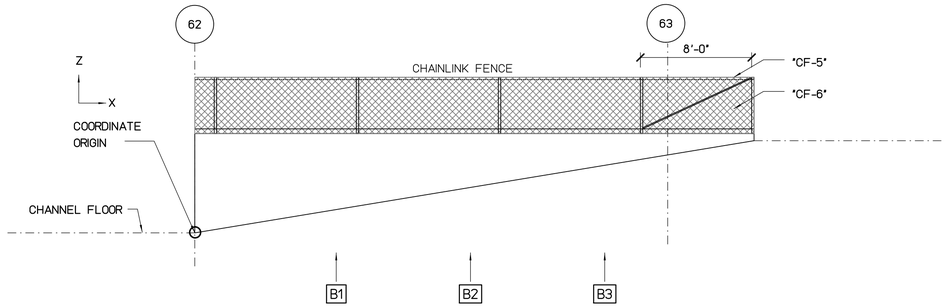


## WALL "B" FLATTEN VIEW

SCALE : 3/16" = 1'-0"

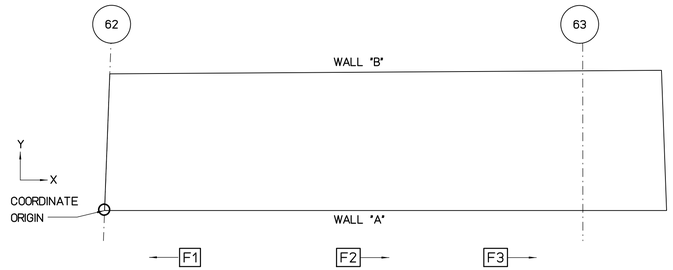


## FLOOR PLAN VIEW

SCALE : 3/16" = 1'-0"

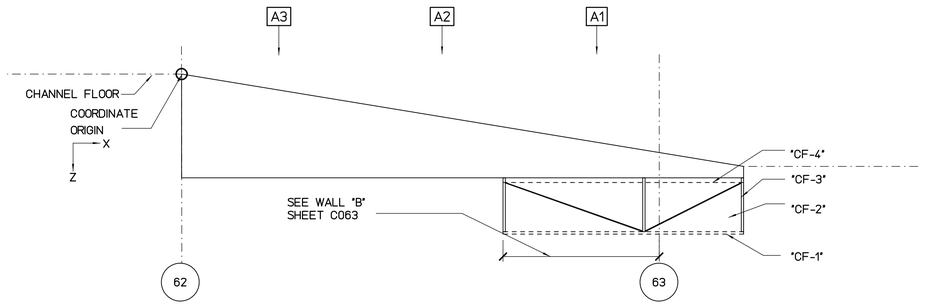


## WALL "A" FLATTEN VIEW

SCALE : 3/16" = 1'-0"

NOTE:

FOR CATTLE GATE PLAN AND DETAILS, SEE SHEET SF203.

REPAIR LEGEND AND NOTES:

- [2] CRACK AND SPALL REPAIR TYPES, SEE SHEETS SR201 AND SR202 FOR DETAILS. TYPE [*] INDICATES NO-REPAIR
- (A) CHAINLINK FENCE REPAIR TYPES, SEE SHEETS SF201 AND SF202 FOR DETAILS
- [1.0] TOP OF WALL LEANING DISTANCE TOWARD CHANNEL IN INCHES, SEE SHEETS SL101 TO SL207 FOR CONCRETE LINING

PHOTO LEGEND:

- [A1] WALL "A" ELEVATION PHOTO IDENTIFICATION SEE FLATTEN VIEW FOR PHOTO LOCATION
- [B1] WALL "B" ELEVATION PHOTO IDENTIFICATION SEE FLATTEN VIEW FOR PHOTO LOCATION
- [F1] CHANNEL FLOOR PHOTO IDENTIFICATION SEE FLOOR PLAN VIEW FOR PHOTO LOCATION

B1



B2



B3



F1



F2



F3



A1



A2




A3




### SPALL REPAIR CHART

| MARK | LOCATION | REPAIR TYPE | SPALL DIMENSION | | | SPALL VOLUME | SPALL CENTER COORDINATE | | RATING |
|---|---|---|---|---|---|---|---|---|---|
| | | | L | W | D | | X | Y OR Z | |
| | | | | | | | | | |
| | | | | | | | | | |
| | | | | | | | | | |
| | | | | | | | | | |
| | | | | | | | | | |
| | | | | | | | | | |
| | | | | | | | | | |

### CHAINLINK FENCE REPAIR CHART

| MARK | LOCATION | REPAIR TYPE | POSTS | TOP RAIL | BOTTOM WIRE | BRACE | FABRIC |
|---|---|---|---|---|---|---|---|
| *CF-1* | WALL *A* | (C) | - | MISSING 6' | - | - | - |
| *CF-2* | WALL *A* | (E) | - | - | - | - | MISSING 6'x4' |
| *CF-3* | WALL *A* | (A) | DAMAGED 1 | - | - | - | - |
| *CF-4* | WALL *A* | (D) | - | - | MISSING 6' | - | - |
| *CF-5* | WALL *B* | (C) | - | MISSING 40' | - | - | - |
| *CF-6* | WALL *B* | (E) | - | - | - | - | DAMAGED 40'x4' |
| | | | | | | | |
| | | | | | | | |
| | | | | | | | |
| | | | | | | | |

### CRACK REPAIR CHART

| MARK | LOCATION | REPAIR TYPE | GENERAL CRACKS (LF) | MAJOR CRACKS | | | | | | RATING |
|---|---|---|---|---|---|---|---|---|---|---|
| | | | | WIDTH (IN) | LENGTH (FT) | START PNT | | END PNT | | |
| | | | | | | X | Y,Z | X | Y,Z | |
| | | | | | | | | | | |
| | | | | | | | | | | |
| | | | | | | | | | | |
| | | | | | | | | | | |
| | | | | | | | | | | |
| | | | | | | | | | | |
| | | | | | | | | | | |

GRAPHIC SCALES:

0 1' 2' 4' 8' 12' 16'

3/16"=1'-0"

| REVISION NO. | DATE | REVISIONS | BY |
|---|---|---|---|
| | | | |

ARTHER R DAR
LICENSED PROFESSIONAL ENGINEER
No. 7808-S
HAWAII U.S.A.

Exp. Date: 4-30-20

THIS WORK WAS PREPARED BY ME OR UNDER MY SUPERVISION AND CONSTRUCTION OF THIS PROJECT WILL BE UNDER MY OBSERVATION

DEPARTMENT OF HAWAIIAN HOMELAND

# NANAKULI FLOOD CONTROL CHANNEL IMPROVEMENTS NANAKULI VALLEY, OAHU HAWAII

## CHANNEL SEGMENT [063R] REPAIR DETAILS

| | |
|---|---|
| DESIGNED BY: | TTP |
| DRAWN BY: | AK, AP, DL |
| CHECKED BY: | AD |
| SUPV: | |
| DATE: | 03/05/2019 |

HAWAII ENGINEERING GROUP, Inc.
Civil & Structural Engineers
1088 BISHOP STREET #2506
HONOLULU, HI 96813
Tel: 808-533-2092

JOB NO.

SHEET C063R

71 OF 225 SHTS

FILE ___ DRAWER ___ ___ FOLDER ___ ___

Plot date: 15-Apr-2020
Full Size Plot

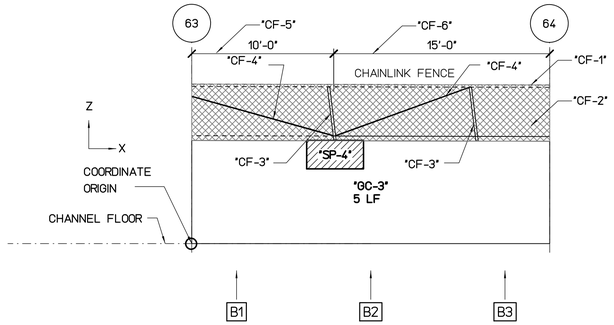


## WALL "B" FLATTEN VIEW

SCALE : 3/16" = 1'-0"

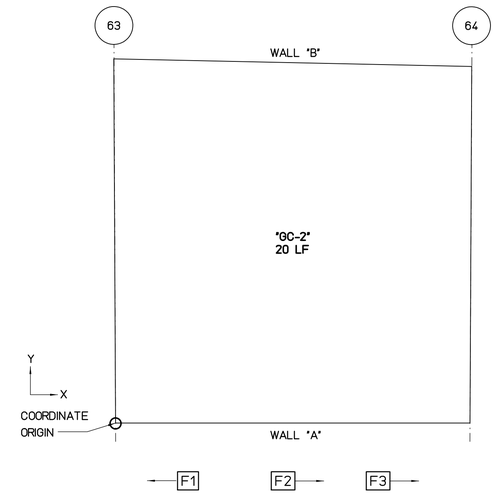


## FLOOR PLAN VIEW

SCALE : 3/16" = 1'-0"

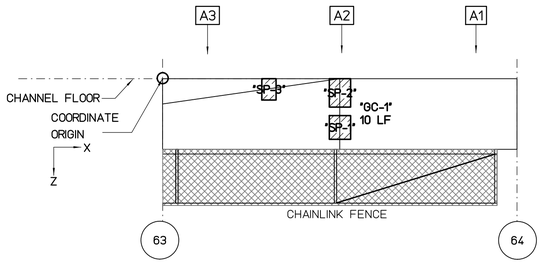


## WALL "A" FLATTEN VIEW

SCALE : 3/16" = 1'-0"

REPAIR LEGEND AND NOTES:

- 2 — CRACK AND SPALL REPAIR TYPES, SEE SHEETS SR201 AND SR202 FOR DETAILS. TYPE [*] INDICATES NO-REPAIR
- (A) — CHAINLINK FENCE REPAIR TYPES, SEE SHEETS SF201 AND SF202 FOR DETAILS
- 1.0 — TOP OF WALL LEANING DISTANCE TOWARD CHANNEL IN INCHES, SEE SHEETS SL101 TO SL207 FOR CONCRETE LINING

PHOTO LEGEND:

- A1 — WALL "A" ELEVATION PHOTO IDENTIFICATION SEE FLATTEN VIEW FOR PHOTO LOCATION
- B1 — WALL "B" ELEVATION PHOTO IDENTIFICATION SEE FLATTEN VIEW FOR PHOTO LOCATION
- F1 — CHANNEL FLOOR PHOTO IDENTIFICATION SEE FLOOR PLAN VIEW FOR PHOTO LOCATION

B1



B2



B3



F1



F2



F3



A1



A2



A3



### SPALL REPAIR CHART

| MARK | LOCATION | REPAIR TYPE | SPALL DIMENSION L | SPALL DIMENSION W | SPALL DIMENSION D | SPALL VOLUME | SPALL CENTER COORDINATE X | SPALL CENTER COORDINATE Y OR Z | RATING |
|---|---|---|---|---|---|---|---|---|---|
| "SP-1" | WALL "A" | 3 | 18 | 20 | 2 | 720 | 11 | 4 | 7 |
| "SP-2" | WALL "A" | 3 | 18 | 24 | 2 | 864 | 11 | 1 | 7 |
| "SP-3" | WALL "A" | 3 | 12 | 18 | 2 | 432 | 6 | 0.5 | 7 |
| "SP-4" | WALL "B" | 3 | 48 | 24 | 3 | 3456 | 9 | 7 | 6 |

### CHAINLINK FENCE REPAIR CHART

| MARK | LOCATION | REPAIR TYPE | POSTS | TOP RAIL | BOTTOM WIRE | BRACE | FABRIC |
|---|---|---|---|---|---|---|---|
| "CF-1" | WALL "B" | C | - | MISSING 25' | - | - | - |
| "CF-2" | WALL "B" | E | - | - | - | - | DAMAGED 25'x4' |
| "CF-3" | WALL "B" | A | BENT 2 | - | - | - | - |
| "CF-4" | WALL "B" | B | - | - | - | DAMAGED 2 | - |
| "CF-5" | WALL "B" | D | - | - | MISSING 10' | - | - |
| "CF-6" | WALL "B" | D | - | - | DAMAGED 15' | - | - |

### CRACK REPAIR CHART

| MARK | LOCATION | REPAIR TYPE | GENERAL CRACKS (LF) | MAJOR CRACKS WIDTH (IN) | MAJOR CRACKS LENGTH (FT) | MAJOR CRACKS START PNT X | MAJOR CRACKS START PNT Y,Z | MAJOR CRACKS END PNT X | MAJOR CRACKS END PNT Y,Z | RATING |
|---|---|---|---|---|---|---|---|---|---|---|
| "GC-1" | WALL "A" | * | 10 | - | - | - | - | - | - | 8 |
| "GC-2" | FLOOR | * | 20 | - | - | - | - | - | - | 8 |
| "GC-3" | WALL "B" | * | 5 | - | - | - | - | - | - | 9 |

GRAPHIC SCALES:

0 1' 2' 4' 8' 12' 16'

3/16"=1'-0"

| REVISION NO. | DATE | REVISIONS | BY |
|---|---|---|---|

ARTHUR R. DAR — LICENSED PROFESSIONAL ENGINEER — No. 7808-S — HAWAII U.S.A.

Exp. Date: 4-30-20

THIS WORK WAS PREPARED BY ME OR UNDER MY SUPERVISION AND CONSTRUCTION OF THIS PROJECT WILL BE UNDER MY OBSERVATION

DEPARTMENT OF HAWAIIAN HOMELAND

# NANAKULI FLOOD CONTROL CHANNEL IMPROVEMENTS NANAKULI VALLEY, OAHU HAWAII

CHANNEL SEGMENT 064 REPAIR DETAILS

| | |
|---|---|
| DESIGNED BY: | TTP |
| DRAWN BY: | AK, AP, DL |
| CHECKED BY: | AD |
| SUPV: | |
| DATE: | 03/05/2019 |

HAWAII ENGINEERING GROUP, Inc.
Civil & Structural Engineers
1088 BISHOP STREET #2506
HONOLULU, HI 96813
Tel: 808-533-2092

JOB NO.

SHEET C064

72 OF 225 SHTS

FILE ___ DRAWER ___ ___ FOLDER ___ ___

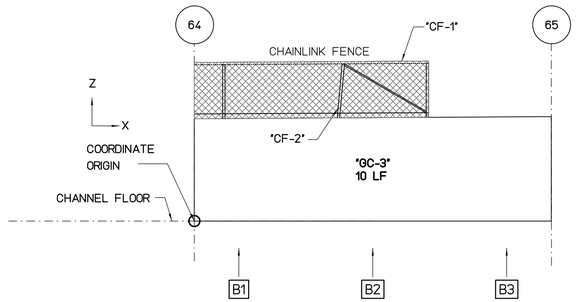


## WALL "B" FLATTEN VIEW

SCALE : 3/16" = 1'-0"

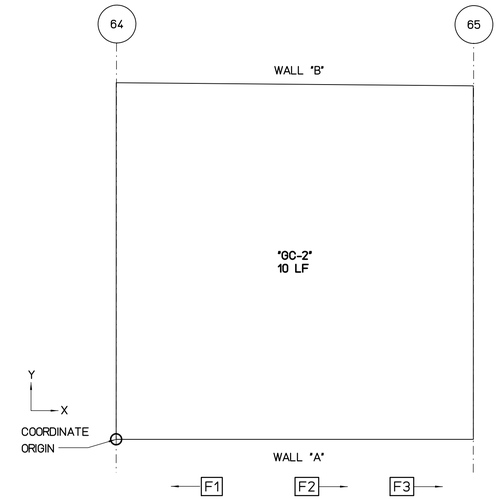


## FLOOR PLAN VIEW

SCALE : 3/16" = 1'-0"

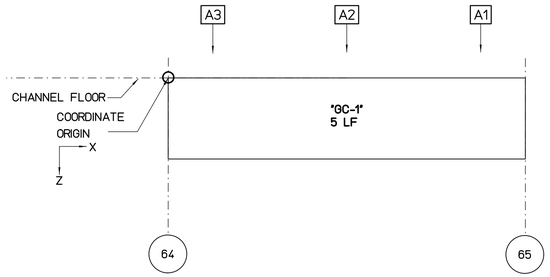


## WALL "A" FLATTEN VIEW

SCALE : 3/16" = 1'-0"

REPAIR LEGEND AND NOTES:

- 2 — CRACK AND SPALL REPAIR TYPES, SEE SHEETS SR201 AND SR202 FOR DETAILS. TYPE [*] INDICATES NO-REPAIR
- (A) — CHAINLINK FENCE REPAIR TYPES, SEE SHEETS SF201 AND SF202 FOR DETAILS
- 1.0 — TOP OF WALL LEANING DISTANCE TOWARD CHANNEL IN INCHES, SEE SHEETS SL101 TO SL207 FOR CONCRETE LINING

PHOTO LEGEND:

- A1 — WALL "A" ELEVATION PHOTO IDENTIFICATION SEE FLATTEN VIEW FOR PHOTO LOCATION
- B1 — WALL "B" ELEVATION PHOTO IDENTIFICATION SEE FLATTEN VIEW FOR PHOTO LOCATION
- F1 — CHANNEL FLOOR PHOTO IDENTIFICATION SEE FLOOR PLAN VIEW FOR PHOTO LOCATION

B1



B2



B3



F1



F2



F3



A1



A2



A3



### SPALL REPAIR CHART

| MARK | LOCATION | REPAIR TYPE | SPALL DIMENSION | | | SPALL VOLUME | SPALL CENTER COORDINATE | | RATING |
|---|---|---|---|---|---|---|---|---|---|
| | | | L | W | D | | X | Y OR Z | |
| | | | | | | | | | |
| | | | | | | | | | |
| | | | | | | | | | |
| | | | | | | | | | |
| | | | | | | | | | |
| | | | | | | | | | |
| | | | | | | | | | |
| | | | | | | | | | |

### CHAINLINK FENCE REPAIR CHART

| MARK | LOCATION | REPAIR TYPE | POSTS | TOP RAIL | BOTTOM WIRE | BRACE | FABRIC |
|---|---|---|---|---|---|---|---|
| "CF-1" | WALL "B" | (C) | - | MISSING 17' | - | - | - |
| "CF-2" | WALL "B" | (A) | BENT 1 | - | - | - | - |
| | | | | | | | |
| | | | | | | | |
| | | | | | | | |
| | | | | | | | |
| | | | | | | | |
| | | | | | | | |
| | | | | | | | |

### CRACK REPAIR CHART

| MARK | LOCATION | REPAIR TYPE | GENERAL CRACKS (LF) | MAJOR CRACKS | | | | | | RATING |
|---|---|---|---|---|---|---|---|---|---|---|
| | | | | WIDTH (IN) | LENGTH (FT) | START PNT X | START PNT Y,Z | END PNT X | END PNT Y,Z | |
| "GC-1" | WALL "A" | [*] | 5 | - | - | - | - | - | - | 9 |
| "GC-2" | FLOOR | [*] | 10 | - | - | - | - | - | - | 8 |
| "GC-3" | WALL "B" | [*] | 10 | - | - | - | - | - | - | 8 |
| | | | | | | | | | | |
| | | | | | | | | | | |
| | | | | | | | | | | |
| | | | | | | | | | | |

GRAPHIC SCALES:

0 1' 2' 4' 8' 12' 16'

3/16"=1'-0"

| REVISION NO. | DATE | REVISIONS | BY |
|---|---|---|---|
| | | | |

ARTHER R. DAR
LICENSED PROFESSIONAL ENGINEER
No. 7808-S
HAWAII U.S.A.

Exp. Date: 4-30-20

THIS WORK WAS PREPARED BY ME OR UNDER MY SUPERVISION AND CONSTRUCTION OF THIS PROJECT WILL BE UNDER MY OBSERVATION

DEPARTMENT OF HAWAIIAN HOMELAND

# NANAKULI FLOOD CONTROL CHANNEL IMPROVEMENTS NANAKULI VALLEY, OAHU HAWAII

## CHANNEL SEGMENT 065 REPAIR DETAILS

| | |
|---|---|
| DESIGNED BY: | TTP |
| DRAWN BY: | AK, AP, DL |
| CHECKED BY: | AD |
| SUPV: | |
| DATE: | 03/05/2019 |


HAWAII ENGINEERING GROUP, Inc.
Civil & Structural Engineers
1088 BISHOP STREET #2506
HONOLULU, HI 96813
Tel: 808-533-2092


JOB NO.

SHEET C065

73 OF 225 SHTS

FILE ___ DRAWER ___ ___ FOLDER ___ ___

Plot date: 15-Apr-2020

Full Size Plot

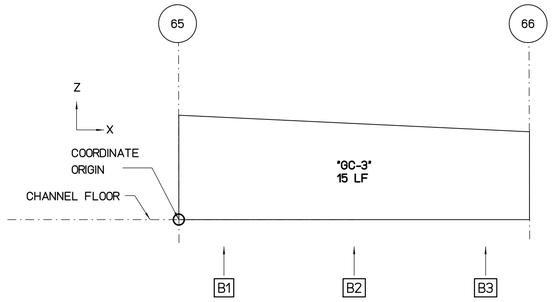


## WALL "B" FLATTEN VIEW (NIC)

SCALE : 3/16" = 1'-0"

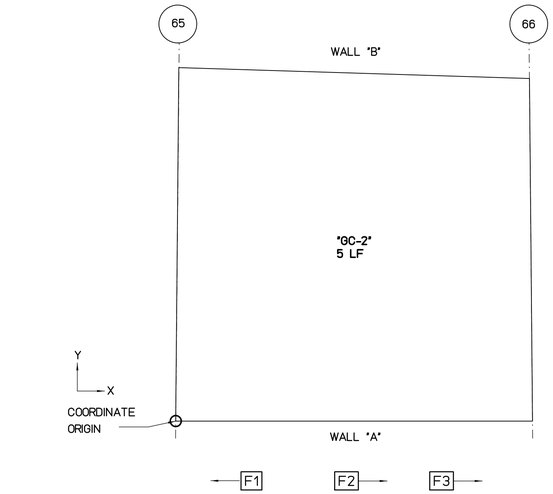


## FLOOR PLAN VIEW

SCALE : 3/16" = 1'-0"

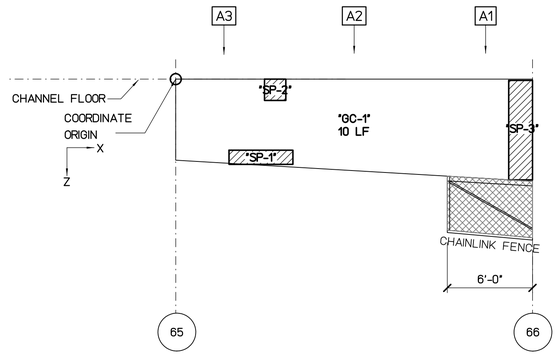


## WALL "A" FLATTEN VIEW (NIC)

SCALE : 3/16" = 1'-0"

REPAIR LEGEND AND NOTES:

- 2 — CRACK AND SPALL REPAIR TYPES, SEE SHEETS SR201 AND SR202 FOR DETAILS. TYPE ⊠ INDICATES NO-REPAIR
- Ⓐ — CHAINLINK FENCE REPAIR TYPES, SEE SHEETS SF201 AND SF202 FOR DETAILS
- 1.0 — TOP OF WALL LEANING DISTANCE TOWARD CHANNEL IN INCHES, SEE SHEETS SL101 TO SL207 FOR CONCRETE LINING

PHOTO LEGEND:

- A1 — WALL "A" ELEVATION PHOTO IDENTIFICATION SEE FLATTEN VIEW FOR PHOTO LOCATION
- B1 — WALL "B" ELEVATION PHOTO IDENTIFICATION SEE FLATTEN VIEW FOR PHOTO LOCATION
- F1 — CHANNEL FLOOR PHOTO IDENTIFICATION SEE FLOOR PLAN VIEW FOR PHOTO LOCATION

B1



B2



B3



F1



F2



F3



A1



A2



A3



### SPALL REPAIR CHART

| MARK | LOCATION | REPAIR TYPE | SPALL DIMENSION L | SPALL DIMENSION W | SPALL DIMENSION D | SPALL VOLUME | SPALL CENTER COORDINATE X | SPALL CENTER COORDINATE Y OR Z | RATING |
|---|---|---|---|---|---|---|---|---|---|
| "SP-1" | WALL "A" | ⊠ | 54 | 12 | 3 | 1944 | 6 | 5.5 | 6 |
| "SP-2" | WALL "A" | ⊠ | 18 | 18 | 3 | 972 | 7 | 0.7 | 6 |
| "SP-3" | WALL "A" | ⊠ | 20 | 84 | 4 | 8064 | 24.5 | 3.6 | 6 |

### CHAINLINK FENCE REPAIR CHART

| MARK | LOCATION | REPAIR TYPE | POSTS | TOP RAIL | BOTTOM WIRE | BRACE | FABRIC |
|---|---|---|---|---|---|---|---|

### CRACK REPAIR CHART

| MARK | LOCATION | REPAIR TYPE | GENERAL CRACKS (LF) | MAJOR CRACKS WIDTH (IN) | MAJOR CRACKS LENGTH (FT) | MAJOR CRACKS START PNT X | MAJOR CRACKS START PNT Y,Z | MAJOR CRACKS END PNT X | MAJOR CRACKS END PNT Y,Z | RATING |
|---|---|---|---|---|---|---|---|---|---|---|
| "GC-1" | WALL "A" | ⊠ | 10 | - | - | - | - | - | - | 8 |
| "GC-2" | FLOOR | ⊠ | 5 | - | - | - | - | - | - | 9 |
| "GC-3" | WALL "B" | ⊠ | 15 | - | - | - | - | - | - | 8 |

GRAPHIC SCALES:

0 1' 2' 4' 8' 12' 16'

3/16"=1'-0"

| REVISION NO. | DATE | REVISIONS | BY |
|---|---|---|---|

ATHER R. DAR
LICENSED PROFESSIONAL ENGINEER
No. 7808-S
HAWAII U.S.A.

Exp. Date: 4-30-20

THIS WORK WAS PREPARED BY ME OR UNDER MY SUPERVISION AND CONSTRUCTION OF THIS PROJECT WILL BE UNDER MY OBSERVATION

DEPARTMENT OF HAWAIIAN HOMELAND

# NANAKULI FLOOD CONTROL CHANNEL IMPROVEMENTS NANAKULI VALLEY, OAHU HAWAII

CHANNEL SEGMENT 066 REPAIR DETAILS

| | |
|---|---|
| DESIGNED BY: | TTP |
| DRAWN BY: | AK, AP, DL |
| CHECKED BY: | AD |
| SUPV: | |
| DATE: | 03/05/2019 |


HAWAII ENGINEERING GROUP, Inc.
Civil & Structural Engineers
1088 BISHOP STREET #2506
HONOLULU, HI 96813
Tel: 808-533-2092


JOB NO.

SHEET C066

74 OF 225 SHTS

FILE ___ DRAWER ___ ___ FOLDER ___ ___

Plot date: 15-Apr-2020

Full Size Plot

Plot date: 15-Apr-2020
Full Size Plot

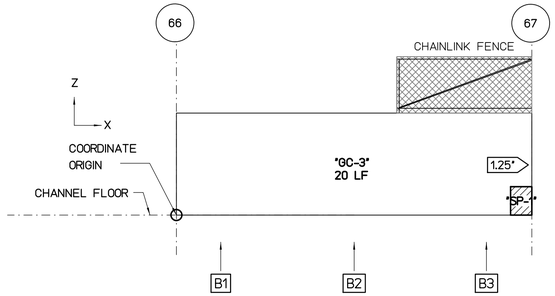


## WALL "B" FLATTEN VIEW

SCALE : 3/16" = 1'-0"

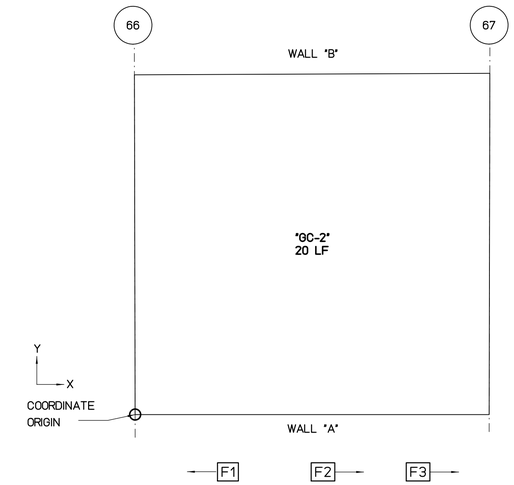


## FLOOR PLAN VIEW

SCALE : 3/16" = 1'-0"

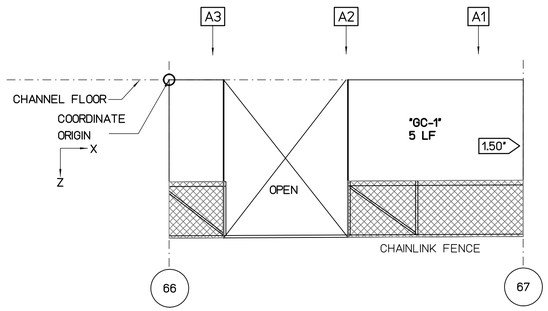


## WALL "A" FLATTEN VIEW

SCALE : 3/16" = 1'-0"

REPAIR LEGEND AND NOTES:

- 2 — CRACK AND SPALL REPAIR TYPES, SEE SHEETS SR201 AND SR202 FOR DETAILS. TYPE [*] INDICATES NO-REPAIR
- (A) — CHAINLINK FENCE REPAIR TYPES, SEE SHEETS SF201 AND SF202 FOR DETAILS
- 1.0 — TOP OF WALL LEANING DISTANCE TOWARD CHANNEL IN INCHES, SEE SHEETS SL101 TO SL207 FOR CONCRETE LINING

PHOTO LEGEND:

- A1 — WALL "A" ELEVATION PHOTO IDENTIFICATION SEE FLATTEN VIEW FOR PHOTO LOCATION
- B1 — WALL "B" ELEVATION PHOTO IDENTIFICATION SEE FLATTEN VIEW FOR PHOTO LOCATION
- F1 — CHANNEL FLOOR PHOTO IDENTIFICATION SEE FLOOR PLAN VIEW FOR PHOTO LOCATION

B1



B2



B3



F1



F2



F3



A1



A2



A3



### SPALL REPAIR CHART

| MARK | LOCATION | REPAIR TYPE | SPALL DIMENSION L | SPALL DIMENSION W | SPALL DIMENSION D | SPALL VOLUME | SPALL CENTER COORDINATE X | SPALL CENTER COORDINATE Y OR Z | RATING |
|---|---|---|---|---|---|---|---|---|---|
| "SP-1" | WALL "B" | 3 | 18 | 24 | 3 | 1296 | 24.3 | 1 | 6 |

### CHAINLINK FENCE REPAIR CHART

| MARK | LOCATION | REPAIR TYPE | POSTS | TOP RAIL | BOTTOM WIRE | BRACE | FABRIC |
|---|---|---|---|---|---|---|---|

### CRACK REPAIR CHART

| MARK | LOCATION | REPAIR TYPE | GENERAL CRACKS (LF) | MAJOR CRACKS WIDTH (IN) | MAJOR CRACKS LENGTH (FT) | MAJOR CRACKS START PNT X | MAJOR CRACKS START PNT Y,Z | MAJOR CRACKS END PNT X | MAJOR CRACKS END PNT Y,Z | RATING |
|---|---|---|---|---|---|---|---|---|---|---|
| "GC-1" | WALL "A" | * | 5 | - | - | - | - | - | - | 9 |
| "GC-2" | FLOOR | * | 20 | - | - | - | - | - | - | 8 |
| "GC-3" | WALL "B" | * | 20 | - | - | - | - | - | - | 8 |

GRAPHIC SCALES:

0 1' 2' 4' 8' 12' 16'

3/16"=1'-0"

| REVISION NO. | DATE | REVISIONS | BY |
|---|---|---|---|

ATHER R. DAR
LICENSED PROFESSIONAL ENGINEER
No. 7808-S
HAWAII U.S.A.
Exp. Date: 4-30-20

THIS WORK WAS PREPARED BY ME OR UNDER MY SUPERVISION AND CONSTRUCTION OF THIS PROJECT WILL BE UNDER MY OBSERVATION

DEPARTMENT OF HAWAIIAN HOMELAND

# NANAKULI FLOOD CONTROL CHANNEL IMPROVEMENTS NANAKULI VALLEY, OAHU HAWAII

## CHANNEL SEGMENT 067 REPAIR DETAILS

| | |
|---|---|
| DESIGNED BY: | TTP |
| DRAWN BY: | AK, AP, DL |
| CHECKED BY: | AD |
| SUPV: | |
| DATE: | 03/05/2019 |

HAWAII ENGINEERING GROUP, Inc.
Civil & Structural Engineers
1088 BISHOP STREET #2506
HONOLULU, HI 96813
Tel: 808-533-2092

JOB NO.

SHEET C067
75 OF 225 SHTS

FILE ___ ___ DRAWER ___ ___ ___ FOLDER ___ ___

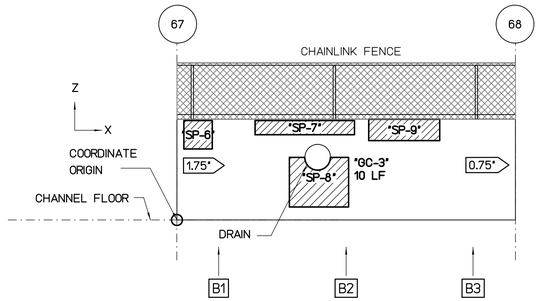


## WALL "B" FLATTEN VIEW

SCALE : 3/16" = 1'-0"

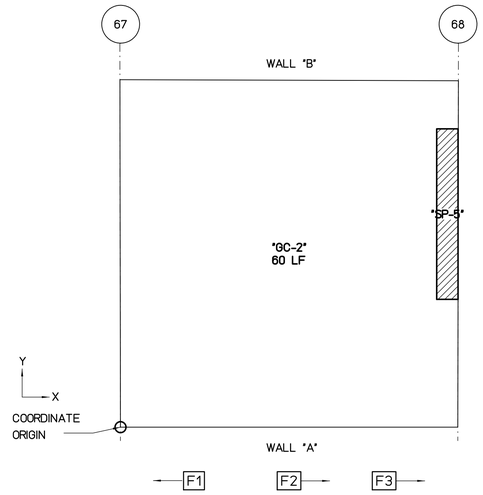


## FLOOR PLAN VIEW

SCALE : 3/16" = 1'-0"

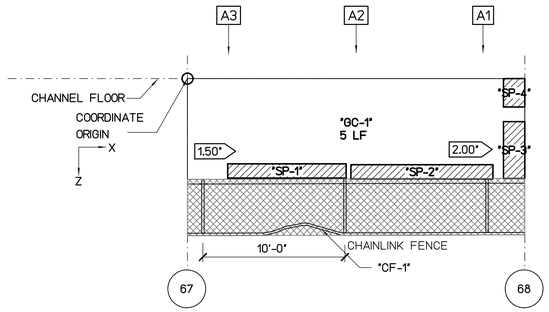


## WALL "A" FLATTEN VIEW

SCALE : 3/16" = 1'-0"

REPAIR LEGEND AND NOTES:

- [2] CRACK AND SPALL REPAIR TYPES, SEE SHEETS SR201 AND SR202 FOR DETAILS. TYPE [*] INDICATES NO-REPAIR
- (A) CHAINLINK FENCE REPAIR TYPES, SEE SHEETS SF201 AND SF202 FOR DETAILS
- <1.0> TOP OF WALL LEANING DISTANCE TOWARD CHANNEL IN INCHES, SEE SHEETS SL101 TO SL207 FOR CONCRETE LINING

PHOTO LEGEND:

- [A1] WALL "A" ELEVATION PHOTO IDENTIFICATION SEE FLATTEN VIEW FOR PHOTO LOCATION
- [B1] WALL "B" ELEVATION PHOTO IDENTIFICATION SEE FLATTEN VIEW FOR PHOTO LOCATION
- [F1] CHANNEL FLOOR PHOTO IDENTIFICATION SEE FLOOR PLAN VIEW FOR PHOTO LOCATION

B1



B2



B3



F1



F2



F3



A1



A2



A3



### SPALL REPAIR CHART

| MARK | LOCATION | REPAIR TYPE | SPALL DIMENSION L | SPALL DIMENSION W | SPALL DIMENSION D | SPALL VOLUME | SPALL CENTER COORDINATE X | SPALL CENTER COORDINATE Y OR Z | RATING |
|---|---|---|---|---|---|---|---|---|---|
| "SP-1" | WALL "A" | [*] | 100 | 12 | 2 | 2400 | 7 | 6.5 | 7 |
| "SP-2" | WALL "A" | [*] | 120 | 12 | 2 | 2880 | 16.5 | 6.6 | 7 |
| "SP-3" | WALL "A" | [*] | 18 | 48 | 2 | 1728 | 23 | 5 | 7 |
| "SP-4" | WALL "A" | [*] | 18 | 24 | 3 | 1296 | 23.6 | 0.7 | 6 |
| "SP-5" | FLOOR | [*] | 18 | 144 | 2 | 5184 | 24 | 15 | 7 |
| "SP-6" | WALL "B" | [*] | 24 | 24 | 2 | 1152 | 1 | 6 | 7 |
| "SP-7" | WALL "B" | [*] | 84 | 12 | 2 | 2016 | 9 | 6.5 | 7 |
| "SP-8" | WALL "B" | [*] | 50 | 42 | 3 | 7500 | 10 | 3 | 6 |
| "SP-9" | WALL "B" | [*] | 60 | 18 | 2 | 2160 | 16 | 6.5 | 7 |

### CHAINLINK FENCE REPAIR CHART

| MARK | LOCATION | REPAIR TYPE | POSTS | TOP RAIL | BOTTOM WIRE | BRACE | FABRIC |
|---|---|---|---|---|---|---|---|
| "CF-1" | WALL "A" | (C) | - | BENT 10" | - | - | - |

### CRACK REPAIR CHART

| MARK | LOCATION | REPAIR TYPE | GENERAL CRACKS (LF) | MAJOR CRACKS WIDTH (IN) | MAJOR CRACKS LENGTH (FT) | MAJOR CRACKS START PNT X | MAJOR CRACKS START PNT Y,Z | MAJOR CRACKS END PNT X | MAJOR CRACKS END PNT Y,Z | RATING |
|---|---|---|---|---|---|---|---|---|---|---|
| "GC-1" | WALL "A" | [*] | 5 | - | - | - | - | - | - | 9 |
| "GC-2" | FLOOR | [*] | 60 | - | - | - | - | - | - | 8 |
| "GC-3" | WALL "B" | [*] | 10 | - | - | - | - | - | - | 8 |

NOTES:

1- CONCRETE LINING IS PROVIDED IN THIS SEGMENT SEE SHEET SL201

2- THERE IS NO SPALL AND CRACK REPAIRS IN THIS SEGMENT

GRAPHIC SCALES:

0 1' 2' 4' 8' 12' 16'

3/16"=1'-0"

| REVISION NO. | DATE | REVISIONS | BY |
|---|---|---|---|

ATHER R. DAR
LICENSED PROFESSIONAL ENGINEER
No. 7808-S
HAWAII U.S.A.
Exp. Date: 4-30-20

THIS WORK WAS PREPARED BY ME OR UNDER MY SUPERVISION AND CONSTRUCTION OF THIS PROJECT WILL BE UNDER MY OBSERVATION

DEPARTMENT OF HAWAIIAN HOMELAND

# NANAKULI FLOOD CONTROL CHANNEL IMPROVEMENTS NANAKULI VALLEY, OAHU HAWAII

## CHANNEL SEGMENT [068] REPAIR DETAILS

DESIGNED BY: TTP
DRAWN BY: AK, AP, DL
CHECKED BY: AD
SUPV:
DATE: 03/05/2019

HAWAII ENGINEERING GROUP, Inc.
Civil & Structural Engineers
1088 BISHOP STREET #2506
HONOLULU, HI 96813
Tel: 808-533-2092

JOB NO.

SHEET C068
76 OF 225 SHTS

FILE ___ DRAWER ___ ___ FOLDER ___ ___

Plot date: 15-Apr-2020

Full Size Plot

Plot date: 15-Apr-2020
Full Size Plot

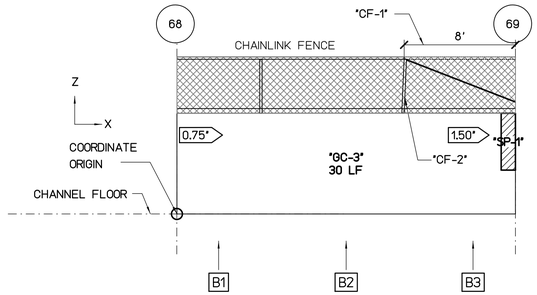


## WALL "B" FLATTEN VIEW

SCALE : 3/16" = 1'-0"

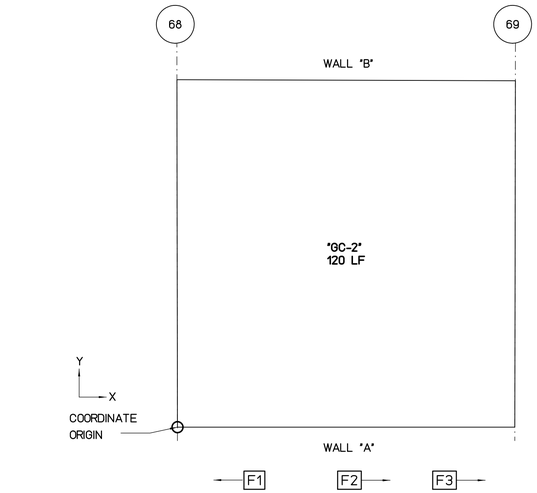


## FLOOR PLAN VIEW

SCALE : 3/16" = 1'-0"

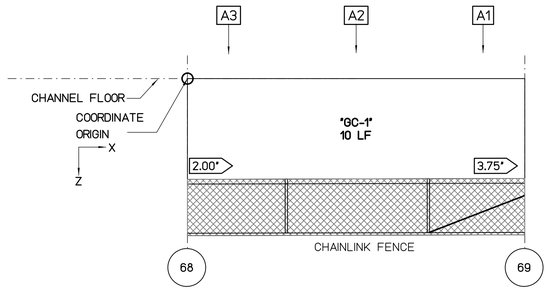


## WALL "A" FLATTEN VIEW

SCALE : 3/16" = 1'-0"

REPAIR LEGEND AND NOTES:

- 2 — CRACK AND SPALL REPAIR TYPES, SEE SHEETS SR201 AND SR202 FOR DETAILS. TYPE ⊠ INDICATES NO-REPAIR
- Ⓐ — CHAINLINK FENCE REPAIR TYPES, SEE SHEETS SF201 AND SF202 FOR DETAILS
- 1.0 — TOP OF WALL LEANING DISTANCE TOWARD CHANNEL IN INCHES, SEE SHEETS SL101 TO SL207 FOR CONCRETE LINING

PHOTO LEGEND:

- A1 — WALL "A" ELEVATION PHOTO IDENTIFICATION SEE FLATTEN VIEW FOR PHOTO LOCATION
- B1 — WALL "B" ELEVATION PHOTO IDENTIFICATION SEE FLATTEN VIEW FOR PHOTO LOCATION
- F1 — CHANNEL FLOOR PHOTO IDENTIFICATION SEE FLOOR PLAN VIEW FOR PHOTO LOCATION

B1



B2



B3



F1



F2



F3



A1



A2



A3



### SPALL REPAIR CHART

| MARK | LOCATION | REPAIR TYPE | SPALL DIMENSION L | SPALL DIMENSION W | SPALL DIMENSION D | SPALL VOLUME | SPALL CENTER COORDINATE X | SPALL CENTER COORDINATE Y OR Z | RATING |
|---|---|---|---|---|---|---|---|---|---|
| "SP-1" | WALL "B" | ⊠ | 12 | 48 | 2 | 1152 | 23.3 | 5.1 | 7 |

### CHAINLINK FENCE REPAIR CHART

| MARK | LOCATION | REPAIR TYPE | POSTS | TOP RAIL | BOTTOM WIRE | BRACE | FABRIC |
|---|---|---|---|---|---|---|---|
| "CF-1" | WALL "B" | Ⓒ | - | MISSING 8' | - | - | - |
| "CF-2" | WALL "B" | Ⓐ | BENT 1 | - | - | - | - |

### CRACK REPAIR CHART

| MARK | LOCATION | REPAIR TYPE | GENERAL CRACKS (LF) | MAJOR CRACKS WIDTH (IN) | MAJOR CRACKS LENGTH (FT) | MAJOR CRACKS START PNT X | MAJOR CRACKS START PNT Y,Z | MAJOR CRACKS END PNT X | MAJOR CRACKS END PNT Y,Z | RATING |
|---|---|---|---|---|---|---|---|---|---|---|
| "GC-1" | WALL "A" | ⊠ | 10 | - | - | - | - | - | - | 8 |
| "GC-2" | FLOOR | ⊠ | 120 | - | - | - | - | - | - | 8 |
| "GC-3" | WALL "B" | ⊠ | 30 | - | - | - | - | - | - | 8 |

NOTES:

1- CONCRETE LINING IS PROVIDED IN THIS SEGMENT SEE SHEET SL201

2- THERE IS NO SPALL AND CRACK REPAIRS IN THIS SEGMENT

GRAPHIC SCALES:

0 1' 2' 4' 8' 12' 16'

3/16"=1'-0"

| REVISION NO. | DATE | REVISIONS | BY |
|---|---|---|---|

ATHER R. DAR
LICENSED PROFESSIONAL ENGINEER
No. 7808-S
HAWAII U.S.A.

Exp. Date: 4-30-20

THIS WORK WAS PREPARED BY ME OR UNDER MY SUPERVISION AND CONSTRUCTION OF THIS PROJECT WILL BE UNDER MY OBSERVATION

DEPARTMENT OF HAWAIIAN HOMELAND

# NANAKULI FLOOD CONTROL CHANNEL IMPROVEMENTS NANAKULI VALLEY, OAHU HAWAII

## CHANNEL SEGMENT 069 REPAIR DETAILS

| | |
|---|---|
| DESIGNED BY: | TTP |
| DRAWN BY: | AK, AP, DL |
| CHECKED BY: | AD |
| SUPV: | |
| DATE: | 03/05/2019 |

HAWAII ENGINEERING GROUP, Inc.
Civil & Structural Engineers
1088 BISHOP STREET #2506
HONOLULU, HI 96813
Tel: 808-533-2092

JOB NO.

SHEET C069
77 OF 225 SHTS

FILE ___ DRAWER ___ ___ FOLDER ___ ___

Plot date: 15-Apr-2020
Full Size Plot

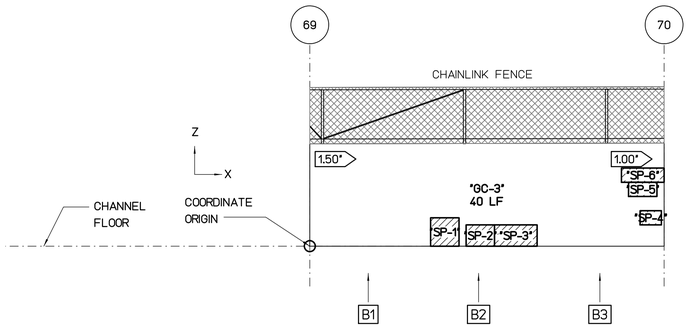


## WALL "B" FLATTEN VIEW

SCALE : 3/16" = 1'-0"

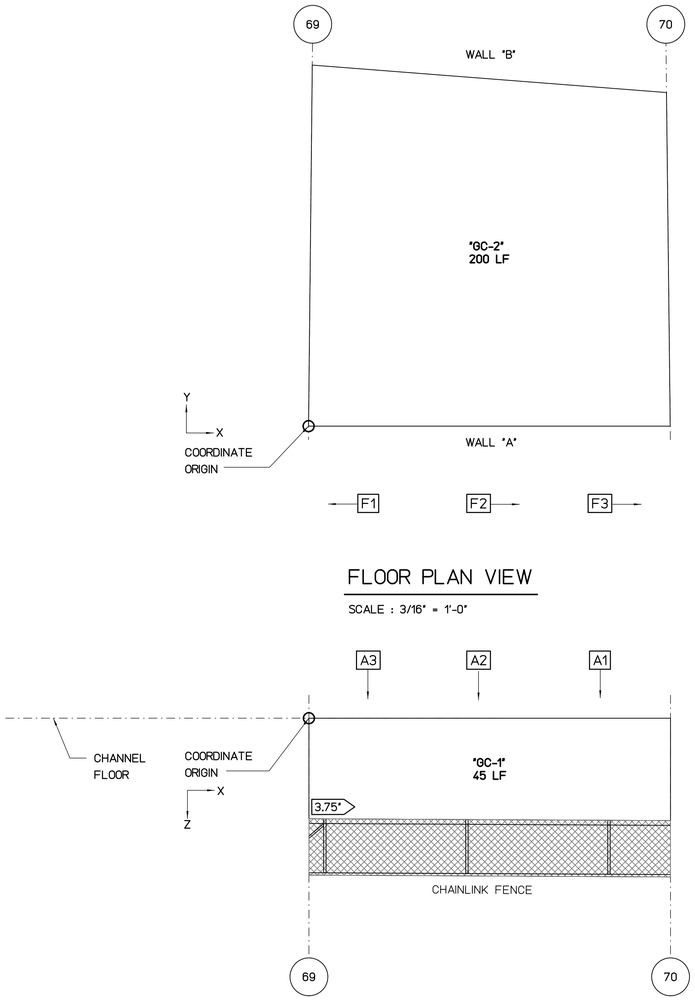


## FLOOR PLAN VIEW

SCALE : 3/16" = 1'-0"




## WALL "A" FLATTEN VIEW

SCALE : 3/16" = 1'-0"

REPAIR LEGEND AND NOTES:

- 2 — CRACK AND SPALL REPAIR TYPES, SEE SHEETS SR201 AND SR202 FOR DETAILS. TYPE [*] INDICATES NO-REPAIR
- (A) — CHAINLINK FENCE REPAIR TYPES, SEE SHEETS SF201 AND SF202 FOR DETAILS
- 1.0 — TOP OF WALL LEANING DISTANCE TOWARD CHANNEL IN INCHES, SEE SHEETS SL101 TO SL207 FOR CONCRETE LINING

PHOTO LEGEND:

- A1 — WALL "A" ELEVATION PHOTO IDENTIFICATION SEE FLATTEN VIEW FOR PHOTO LOCATION
- B1 — WALL "B" ELEVATION PHOTO IDENTIFICATION SEE FLATTEN VIEW FOR PHOTO LOCATION
- F1 — CHANNEL FLOOR PHOTO IDENTIFICATION SEE FLOOR PLAN VIEW FOR PHOTO LOCATION

B1



B2



B3



F1



F2



F3



A1



A2



A3



### SPALL REPAIR CHART

| MARK | LOCATION | REPAIR TYPE | SPALL DIMENSION L | SPALL DIMENSION W | SPALL DIMENSION D | SPALL VOLUME | SPALL CENTER COORDINATE X | SPALL CENTER COORDINATE Y OR Z | RATING |
|---|---|---|---|---|---|---|---|---|---|
| "SP-1" | WALL "B" | [*] | 24 | 24 | 3 | 1728 | 9.5 | 1 | 6 |
| "SP-2" | WALL "B" | [*] | 24 | 18 | 2 | 864 | 12 | 0.8 | 7 |
| "SP-3" | WALL "B" | [*] | 36 | 18 | 2 | 1296 | 14.5 | 0.8 | 7 |
| "SP-4" | WALL "B" | [*] | 18 | 12 | 1.5 | 324 | 24 | 2 | 8 |
| "SP-5" | WALL "B" | [*] | 24 | 12 | 1 | 288 | 23.4 | 4 | 8 |
| "SP-6" | WALL "B" | [*] | 36 | 12 | 1 | 432 | 23.4 | 5 | 8 |
| | | | | | | | | | |
| | | | | | | | | | |

### CHAINLINK FENCE REPAIR CHART

| MARK | LOCATION | REPAIR TYPE | POSTS | TOP RAIL | BOTTOM WIRE | BRACE | FABRIC |
|---|---|---|---|---|---|---|---|
| | | | | | | | |
| | | | | | | | |
| | | | | | | | |
| | | | | | | | |
| | | | | | | | |
| | | | | | | | |
| | | | | | | | |
| | | | | | | | |
| | | | | | | | |

### CRACK REPAIR CHART

| MARK | LOCATION | REPAIR TYPE | GENERAL CRACKS (LF) | MAJOR CRACKS WIDTH (IN) | MAJOR CRACKS LENGTH (FT) | MAJOR CRACKS START PNT X | MAJOR CRACKS START PNT Y,Z | MAJOR CRACKS END PNT X | MAJOR CRACKS END PNT Y,Z | RATING |
|---|---|---|---|---|---|---|---|---|---|---|
| "GC-1" | WALL "A" | [*] | 45 | - | - | - | - | - | - | 8 |
| "GC-2" | FLOOR | [*] | 200 | - | - | - | - | - | - | 8 |
| "GC-3" | WALL "B" | [*] | 40 | - | - | - | - | - | - | 8 |
| | | | | | | | | | | |
| | | | | | | | | | | |
| | | | | | | | | | | |
| | | | | | | | | | | |

NOTES:

1- CONCRETE LINING IS PROVIDED IN THIS SEGMENT SEE SHEET SL201

2- THERE IS NO SPALL AND CRACK REPAIRS IN THIS SEGMENT

GRAPHIC SCALES:

0 1' 2' 4' 8' 12' 16'

3/16"=1'-0"

| REVISION NO. | DATE | REVISIONS | BY |
|---|---|---|---|
| | | | |

ATHER R. DAR
LICENSED PROFESSIONAL ENGINEER
No. 7808-S
HAWAII U.S.A.
Exp. Date: 4-30-20

THIS WORK WAS PREPARED BY ME OR UNDER MY SUPERVISION AND CONSTRUCTION OF THIS PROJECT WILL BE UNDER MY OBSERVATION

DEPARTMENT OF HAWAIIAN HOMELAND

# NANAKULI FLOOD CONTROL CHANNEL IMPROVEMENTS NANAKULI VALLEY, OAHU HAWAII

CHANNEL SEGMENT 070 REPAIR DETAILS

| | |
|---|---|
| DESIGNED BY: | TTP |
| DRAWN BY: | AK, AP, DL |
| CHECKED BY: | AD |
| SUPV: | |
| DATE: | 03/05/2019 |

HAWAII ENGINEERING GROUP, Inc.
Civil & Structural Engineers
1088 BISHOP STREET #2506
HONOLULU, HI 96813
Tel: 808-533-2092

JOB NO.

SHEET C070
78 OF 225 SHTS

FILE ___ DRAWER ___ ___ FOLDER ___ ___

Plot date: 15-Apr-2020
Full Size Plot

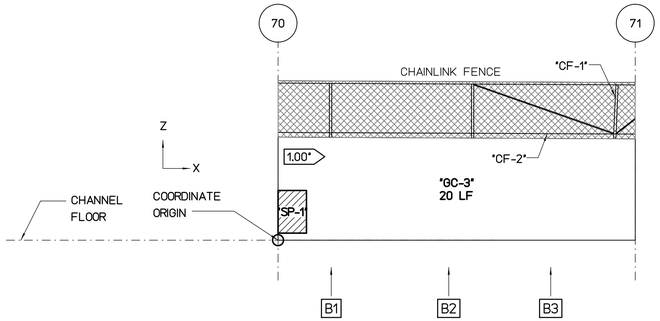


## WALL "B" FLATTEN VIEW

SCALE : 3/16" = 1'-0"

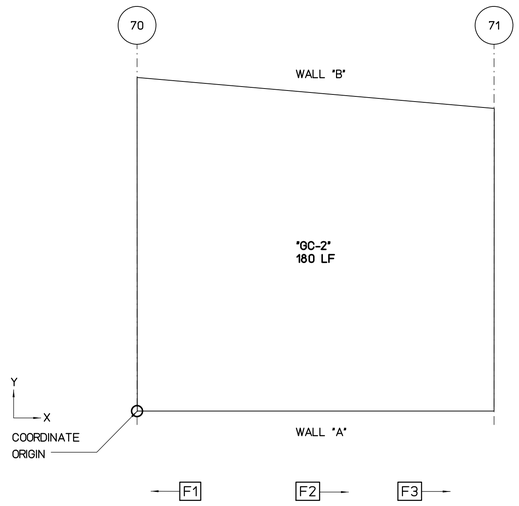


## FLOOR PLAN VIEW

SCALE : 3/16" = 1'-0"

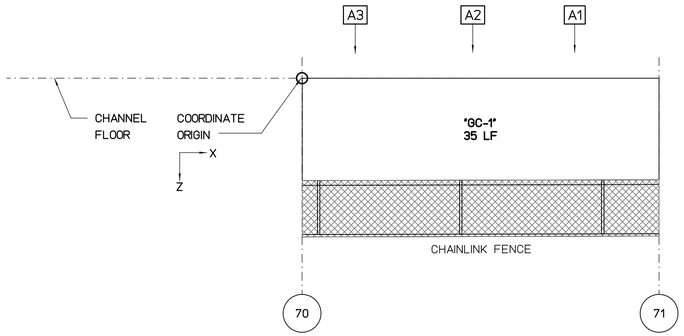


## WALL "A" FLATTEN VIEW

SCALE : 3/16" = 1'-0"

REPAIR LEGEND AND NOTES:

- [2] CRACK AND SPALL REPAIR TYPES, SEE SHEETS SR201 AND SR202 FOR DETAILS. TYPE [*] INDICATES NO-REPAIR
- (A) CHAINLINK FENCE REPAIR TYPES, SEE SHEETS SF201 AND SF202 FOR DETAILS
- [1.0] TOP OF WALL LEANING DISTANCE TOWARD CHANNEL IN INCHES, SEE SHEETS SL101 TO SL207 FOR CONCRETE LINING

PHOTO LEGEND:

- [A1] WALL "A" ELEVATION PHOTO IDENTIFICATION SEE FLATTEN VIEW FOR PHOTO LOCATION
- [B1] WALL "B" ELEVATION PHOTO IDENTIFICATION SEE FLATTEN VIEW FOR PHOTO LOCATION
- [F1] CHANNEL FLOOR PHOTO IDENTIFICATION SEE FLOOR PLAN VIEW FOR PHOTO LOCATION

B1



B2



B3



F1



F2



F3



A1



A2



A3



### SPALL REPAIR CHART

| MARK | LOCATION | REPAIR TYPE | SPALL DIMENSION L | SPALL DIMENSION W | SPALL DIMENSION D | SPALL VOLUME | SPALL CENTER COORDINATE X | SPALL CENTER COORDINATE Y OR Z | RATING |
|---|---|---|---|---|---|---|---|---|---|
| "SP-1" | WALL "B" | [*] | 24 | 36 | 2 | 1728 | 1 | 2 | 7 |

### CHAINLINK FENCE REPAIR CHART

| MARK | LOCATION | REPAIR TYPE | POSTS | TOP RAIL | BOTTOM WIRE | BRACE | FABRIC |
|---|---|---|---|---|---|---|---|
| "CF-1" | WALL "B" | (A) | BENT 1 | - | - | - | - |
| "CF-2" | WALL "B" | (D) | - | - | DAMAGED 25' | - | - |

### CRACK REPAIR CHART

| MARK | LOCATION | REPAIR TYPE | GENERAL CRACKS (LF) | MAJOR CRACKS WIDTH (IN) | MAJOR CRACKS LENGTH (FT) | MAJOR CRACKS START PNT X | MAJOR CRACKS START PNT Y,Z | MAJOR CRACKS END PNT X | MAJOR CRACKS END PNT Y,Z | RATING |
|---|---|---|---|---|---|---|---|---|---|---|
| "GC-1" | WALL "A" | [*] | 35 | - | - | - | - | - | - | 8 |
| "GC-2" | FLOOR | [*] | 180 | - | - | - | - | - | - | 8 |
| "GC-3" | WALL "B" | [*] | 20 | - | - | - | - | - | - | 8 |

NOTES:

1- CONCRETE LINING IS PROVIDED IN THIS SEGMENT SEE SHEET SL201

2- THERE IS NO SPALL AND CRACK REPAIRS IN THIS SEGMENT

GRAPHIC SCALES:

0 1' 2' 4' 8' 12' 16'

3/16"=1'-0"

| REVISION NO. | DATE | REVISIONS | BY |
|---|---|---|---|

ARTHER R DAR
LICENSED PROFESSIONAL ENGINEER
No. 7808-S
HAWAII U.S.A.

Exp. Date: 4-30-20

THIS WORK WAS PREPARED BY ME OR UNDER MY SUPERVISION AND CONSTRUCTION OF THIS PROJECT WILL BE UNDER MY OBSERVATION

DEPARTMENT OF HAWAIIAN HOMELAND

# NANAKULI FLOOD CONTROL CHANNEL IMPROVEMENTS NANAKULI VALLEY, OAHU HAWAII

CHANNEL SEGMENT [071] REPAIR DETAILS

| | |
|---|---|
| DESIGNED BY: | TTP |
| DRAWN BY: | AK, AP, DL |
| CHECKED BY: | AD |
| SUPV: | |
| DATE: | 03/05/2019 |

HAWAII ENGINEERING GROUP, Inc.
Civil & Structural Engineers
1088 BISHOP STREET #2506
HONOLULU, HI 96813
Tel: 808-533-2092

JOB NO.

SHEET C071
79 OF 225 SHTS

FILE ___ DRAWER ___ ___ FOLDER ___ ___

Plot date: 15-Apr-2020

Full Size Plot

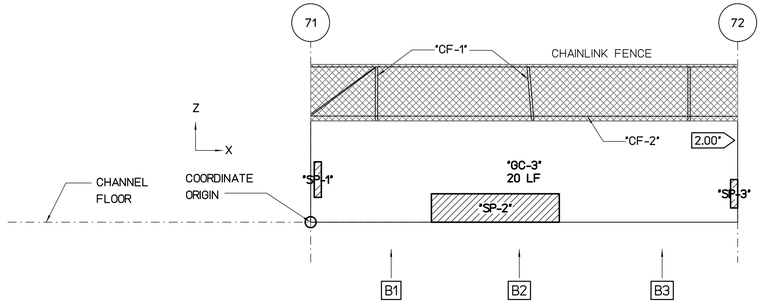


## WALL "B" FLATTEN VIEW

SCALE : 3/16" = 1'-0"

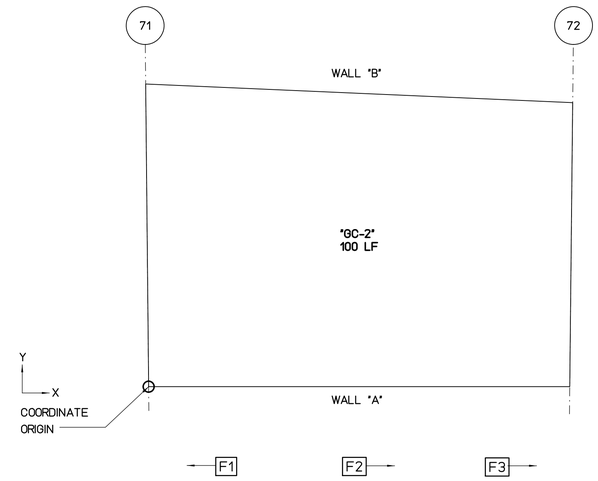


## FLOOR PLAN VIEW

SCALE : 3/16" = 1'-0"

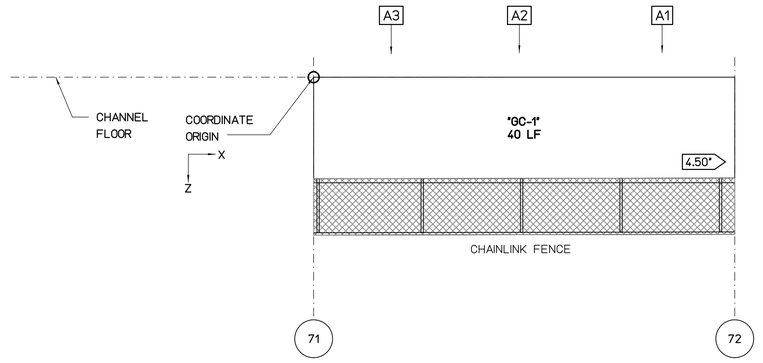


## WALL "A" FLATTEN VIEW

SCALE : 3/16" = 1'-0"

REPAIR LEGEND AND NOTES:

- 2 — CRACK AND SPALL REPAIR TYPES, SEE SHEETS SR201 AND SR202 FOR DETAILS. TYPE ⊠ INDICATES NO-REPAIR
- Ⓐ — CHAINLINK FENCE REPAIR TYPES, SEE SHEETS SF201 AND SF202 FOR DETAILS
- 1.0 — TOP OF WALL LEANING DISTANCE TOWARD CHANNEL IN INCHES, SEE SHEETS SL101 TO SL207 FOR CONCRETE LINING

PHOTO LEGEND:

- A1 — WALL "A" ELEVATION PHOTO IDENTIFICATION SEE FLATTEN VIEW FOR PHOTO LOCATION
- B1 — WALL "B" ELEVATION PHOTO IDENTIFICATION SEE FLATTEN VIEW FOR PHOTO LOCATION
- F1 — CHANNEL FLOOR PHOTO IDENTIFICATION SEE FLOOR PLAN VIEW FOR PHOTO LOCATION

B1



B2



B3



F1



F2



F3



A1



A2



A3



### SPALL REPAIR CHART

| MARK | LOCATION | REPAIR TYPE | SPALL DIMENSION L | SPALL DIMENSION W | SPALL DIMENSION D | SPALL VOLUME | SPALL CENTER COORDINATE X | SPALL CENTER COORDINATE Y OR Z | RATING |
|---|---|---|---|---|---|---|---|---|---|
| "SP-1" | WALL "B" | ⊠ | 6 | 30 | 2 | 360 | 0.5 | 3 | 7 |
| "SP-2" | WALL "B" | ⊠ | 108 | 24 | 2 | 5184 | 13 | 1 | 7 |
| "SP-3" | WALL "B" | ⊠ | 6 | 24 | 2 | 288 | 29.8 | 2 | 7 |

### CHAINLINK FENCE REPAIR CHART

| MARK | LOCATION | REPAIR TYPE | POSTS | TOP RAIL | BOTTOM WIRE | BRACE | FABRIC |
|---|---|---|---|---|---|---|---|
| "CF-1" | WALL "B" | Ⓐ | BENT 2 | - | - | - | - |
| "CF-2" | WALL "B" | Ⓓ | - | - | DAMAGED 30' | - | - |

### CRACK REPAIR CHART

| MARK | LOCATION | REPAIR TYPE | GENERAL CRACKS (LF) | MAJOR CRACKS WIDTH (IN) | MAJOR CRACKS LENGTH (FT) | MAJOR CRACKS START PNT X | MAJOR CRACKS START PNT Y,Z | MAJOR CRACKS END PNT X | MAJOR CRACKS END PNT Y,Z | RATING |
|---|---|---|---|---|---|---|---|---|---|---|
| "GC-1" | WALL "A" | ⊠ | 40 | - | - | - | - | - | - | 8 |
| "GC-2" | FLOOR | ⊠ | 100 | - | - | - | - | - | - | 8 |
| "GC-3" | WALL "B" | ⊠ | 20 | - | - | - | - | - | - | 8 |

NOTES:

1- CONCRETE LINING IS PROVIDED IN THIS SEGMENT SEE SHEET SL201

2- THERE IS NO SPALL AND CRACK REPAIRS IN THIS SEGMENT

GRAPHIC SCALES:

0 1' 2' 4' 8' 12' 16'

3/16"=1'-0"

| REVISION NO. | DATE | REVISIONS | BY |
|---|---|---|---|

ATHER R. DAR — LICENSED PROFESSIONAL ENGINEER — No. 7808-S — HAWAII U.S.A.

Exp. Date: 4-30-20

THIS WORK WAS PREPARED BY ME OR UNDER MY SUPERVISION AND CONSTRUCTION OF THIS PROJECT WILL BE UNDER MY OBSERVATION

DEPARTMENT OF HAWAIIAN HOMELAND

# NANAKULI FLOOD CONTROL CHANNEL IMPROVEMENTS NANAKULI VALLEY, OAHU HAWAII

CHANNEL SEGMENT 072 REPAIR DETAILS

| | |
|---|---|
| DESIGNED BY: | TTP |
| DRAWN BY: | AK, AP, DL |
| CHECKED BY: | AD |
| SUPV: | |
| DATE: | 03/05/2019 |

HAWAII ENGINEERING GROUP, Inc.
Civil & Structural Engineers
1088 BISHOP STREET #2506
HONOLULU, HI 96813
Tel: 808-533-2092

JOB NO.

SHEET C072

80 OF 225 SHTS

FILE ___ DRAWER ___ ___ FOLDER ___ ___

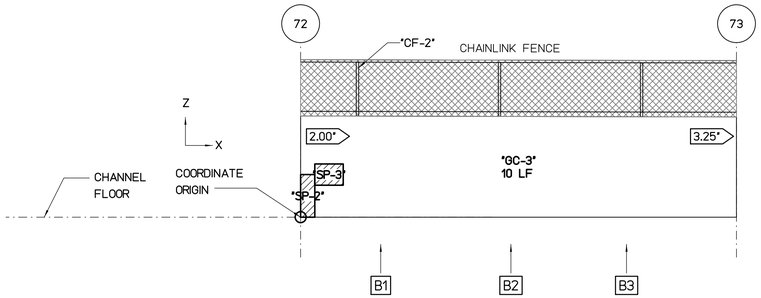


## WALL "B" FLATTEN VIEW

SCALE : 3/16" = 1'-0"

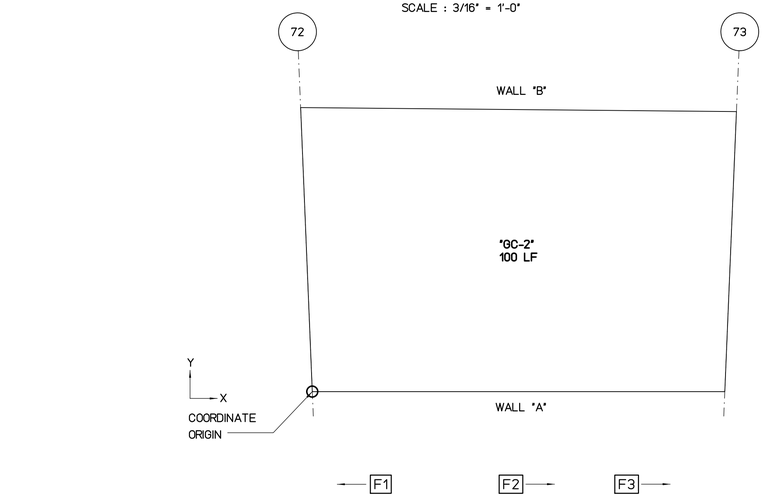


## FLOOR PLAN VIEW

SCALE : 3/16" = 1'-0"

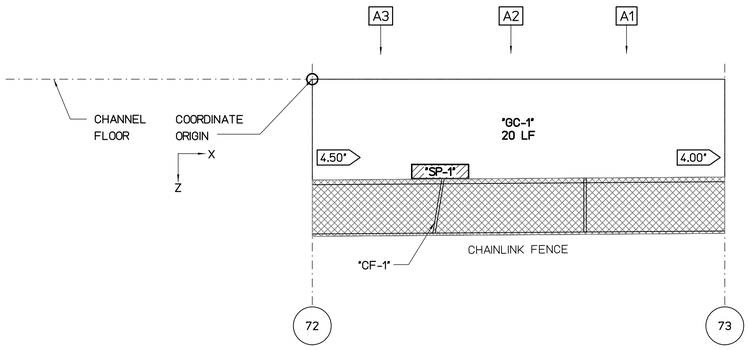


## WALL "A" FLATTEN VIEW

SCALE : 3/16" = 1'-0"

REPAIR LEGEND AND NOTES:

- 2 — CRACK AND SPALL REPAIR TYPES, SEE SHEETS SR201 AND SR202 FOR DETAILS. TYPE ⊠ INDICATES NO-REPAIR
- Ⓐ — CHAINLINK FENCE REPAIR TYPES, SEE SHEETS SF201 AND SF202 FOR DETAILS
- 1.0 — TOP OF WALL LEANING DISTANCE TOWARD CHANNEL IN INCHES, SEE SHEETS SL101 TO SL207 FOR CONCRETE LINING

PHOTO LEGEND:

- A1 — WALL "A" ELEVATION PHOTO IDENTIFICATION SEE FLATTEN VIEW FOR PHOTO LOCATION
- B1 — WALL "B" ELEVATION PHOTO IDENTIFICATION SEE FLATTEN VIEW FOR PHOTO LOCATION
- F1 — CHANNEL FLOOR PHOTO IDENTIFICATION SEE FLOOR PLAN VIEW FOR PHOTO LOCATION

B1



B2



B3



F1



F2



F3



A1



A2



A3



### SPALL REPAIR CHART

| MARK | LOCATION | REPAIR TYPE | SPALL DIMENSION L | SPALL DIMENSION W | SPALL DIMENSION D | SPALL VOLUME | SPALL CENTER COORDINATE X | SPALL CENTER COORDINATE Y OR Z | RATING |
|---|---|---|---|---|---|---|---|---|---|
| "SP-1" | WALL "A" | ⊠ | 48 | 12 | 2 | 1152 | 9 | 6.5 | 7 |
| "SP-2" | WALL "B" | ⊠ | 12 | 36 | 2 | 864 | 0.5 | 1.5 | 7 |
| "SP-3" | WALL "B" | ⊠ | 24 | 18 | 2 | 864 | 2 | 3 | 7 |

### CHAINLINK FENCE REPAIR CHART

| MARK | LOCATION | REPAIR TYPE | POSTS | TOP RAIL | BOTTOM WIRE | BRACE | FABRIC |
|---|---|---|---|---|---|---|---|
| "CF-1" | WALL "A" | Ⓐ | BENT 1 | - | - | - | - |
| "CF-2" | WALL "B" | Ⓐ | BENT 1 | - | - | - | - |

### CRACK REPAIR CHART

| MARK | LOCATION | REPAIR TYPE | GENERAL CRACKS (LF) | MAJOR CRACKS WIDTH (IN) | MAJOR CRACKS LENGTH (FT) | MAJOR CRACKS START PNT X | MAJOR CRACKS START PNT Y,Z | MAJOR CRACKS END PNT X | MAJOR CRACKS END PNT Y,Z | RATING |
|---|---|---|---|---|---|---|---|---|---|---|
| "GC-1" | WALL "A" | ⊠ | 20 | - | - | - | - | - | - | 8 |
| "GC-2" | FLOOR | ⊠ | 100 | - | - | - | - | - | - | 8 |
| "GC-3" | WALL "B" | ⊠ | 10 | - | - | - | - | - | - | 8 |

NOTES:

1- CONCRETE LINING IS PROVIDED IN THIS SEGMENT SEE SHEET SL201

2- THERE IS NO SPALL AND CRACK REPAIRS IN THIS SEGMENT

GRAPHIC SCALES:

0 1' 2' 4' 8' 12' 16'

3/16"=1'-0"

| REVISION NO. | DATE | REVISIONS | BY |
|---|---|---|---|

ATHER R. DAR
LICENSED PROFESSIONAL ENGINEER
No. 7808-S
HAWAII U.S.A.

Exp. Date: 4-30-20

THIS WORK WAS PREPARED BY ME OR UNDER MY SUPERVISION AND CONSTRUCTION OF THIS PROJECT WILL BE UNDER MY OBSERVATION

DEPARTMENT OF HAWAIIAN HOMELAND

# NANAKULI FLOOD CONTROL CHANNEL IMPROVEMENTS NANAKULI VALLEY, OAHU HAWAII

## CHANNEL SEGMENT 073 REPAIR DETAILS

DESIGNED BY: TTP
DRAWN BY: AK, AP, DL
CHECKED BY: AD
SUPV:
DATE: 03/05/2019


HAWAII ENGINEERING GROUP, Inc.
Civil & Structural Engineers
1088 BISHOP STREET #2506
HONOLULU, HI 96813
Tel: 808-533-2092


JOB NO.

SHEET C073
81 OF 225 SHTS

FILE ___ DRAWER ___ ___ FOLDER ___ ___

Plot date: 15-Apr-2020

Full Size Plot

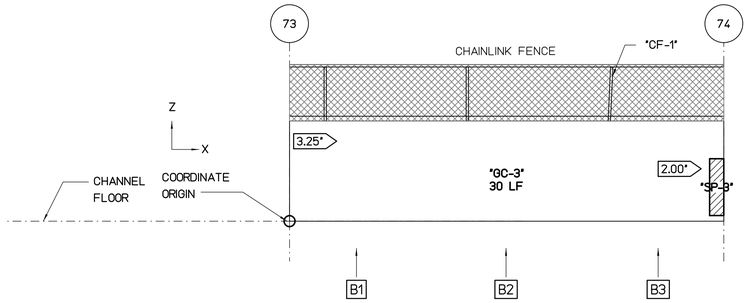


## WALL "B" FLATTEN VIEW

SCALE : 3/16" = 1'-0"

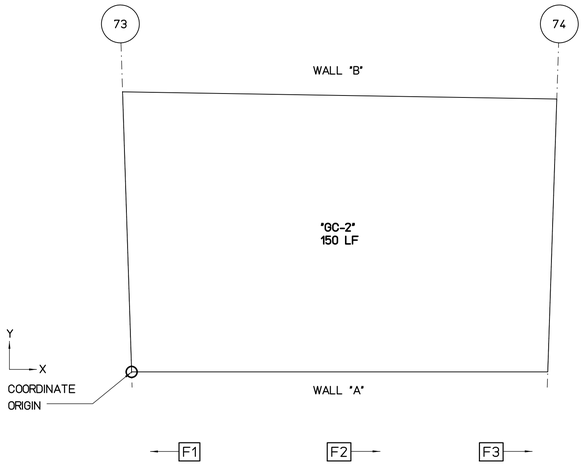


## FLOOR PLAN VIEW

SCALE : 3/16" = 1'-0"

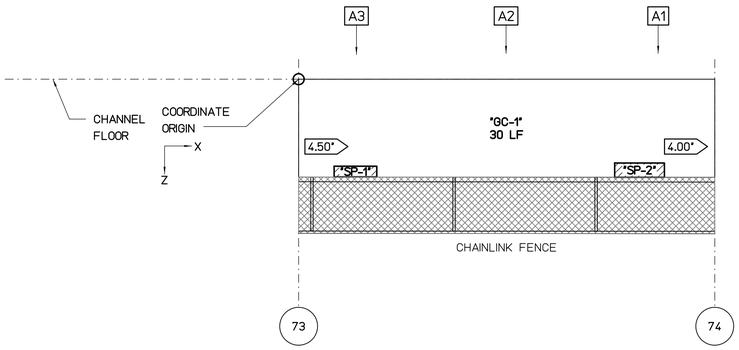


## WALL "A" FLATTEN VIEW

SCALE : 3/16" = 1'-0"

REPAIR LEGEND AND NOTES:

- 2 — CRACK AND SPALL REPAIR TYPES, SEE SHEETS SR201 AND SR202 FOR DETAILS. TYPE [*] INDICATES NO-REPAIR
- (A) — CHAINLINK FENCE REPAIR TYPES, SEE SHEETS SF201 AND SF202 FOR DETAILS
- 1.0 — TOP OF WALL LEANING DISTANCE TOWARD CHANNEL IN INCHES, SEE SHEETS SL101 TO SL207 FOR CONCRETE LINING

PHOTO LEGEND:

- A1 — WALL "A" ELEVATION PHOTO IDENTIFICATION SEE FLATTEN VIEW FOR PHOTO LOCATION
- B1 — WALL "B" ELEVATION PHOTO IDENTIFICATION SEE FLATTEN VIEW FOR PHOTO LOCATION
- F1 — CHANNEL FLOOR PHOTO IDENTIFICATION SEE FLOOR PLAN VIEW FOR PHOTO LOCATION

B1



B2



B3



F1



F2



F3



A1



A2



A3



### SPALL REPAIR CHART

| MARK | LOCATION | REPAIR TYPE | SPALL DIMENSION L | SPALL DIMENSION W | SPALL DIMENSION D | SPALL VOLUME | SPALL CENTER COORDINATE X | SPALL CENTER COORDINATE Y OR Z | RATING |
|---|---|---|---|---|---|---|---|---|---|
| "SP-1" | WALL "A" | [*] | 36 | 9 | 2 | 648 | 4 | 6.5 | 7 |
| "SP-2" | WALL "A" | [*] | 42 | 12 | 2 | 1008 | 24 | 6.4 | 7 |
| "SP-3" | WALL "B" | [*] | 12 | 48 | 2 | 1152 | 30.1 | 2.4 | 7 |

### CHAINLINK FENCE REPAIR CHART

| MARK | LOCATION | REPAIR TYPE | POSTS | TOP RAIL | BOTTOM WIRE | BRACE | FABRIC |
|---|---|---|---|---|---|---|---|
| "CF-1" | WALL "B" | (A) | BENT 1 | - | - | - | - |

### CRACK REPAIR CHART

| MARK | LOCATION | REPAIR TYPE | GENERAL CRACKS (LF) | MAJOR CRACKS WIDTH (IN) | MAJOR CRACKS LENGTH (FT) | MAJOR CRACKS START PNT X | MAJOR CRACKS START PNT Y,Z | MAJOR CRACKS END PNT X | MAJOR CRACKS END PNT Y,Z | RATING |
|---|---|---|---|---|---|---|---|---|---|---|
| "GC-1" | WALL "A" | [*] | 30 | - | - | - | - | - | - | 8 |
| "GC-2" | FLOOR | [*] | 150 | - | - | - | - | - | - | 8 |
| "GC-3" | WALL "B" | [*] | 30 | - | - | - | - | - | - | 8 |

NOTES:

1- CONCRETE LINING IS PROVIDED IN THIS SEGMENT SEE SHEET SL201

2- THERE IS NO SPALL AND CRACK REPAIRS IN THIS SEGMENT

GRAPHIC SCALES:

0 1' 2' 4' 8' 12' 16'

3/16"=1'-0"

| REVISION NO. | DATE | REVISIONS | BY |
|---|---|---|---|

ATHER R. DAR
LICENSED PROFESSIONAL ENGINEER
No. 7808-S
HAWAII U.S.A.

Exp. Date: 4-30-20

THIS WORK WAS PREPARED BY ME OR UNDER MY SUPERVISION AND CONSTRUCTION OF THIS PROJECT WILL BE UNDER MY OBSERVATION

DEPARTMENT OF HAWAIIAN HOMELAND

# NANAKULI FLOOD CONTROL CHANNEL IMPROVEMENTS NANAKULI VALLEY, OAHU HAWAII

CHANNEL SEGMENT 074 REPAIR DETAILS

| | |
|---|---|
| DESIGNED BY: | TTP |
| DRAWN BY: | AK, AP, DL |
| CHECKED BY: | AD |
| SUPV: | |
| DATE: | 03/05/2019 |


HAWAII ENGINEERING GROUP, Inc.
Civil & Structural Engineers
1088 BISHOP STREET #2506
HONOLULU, HI 96813
Tel: 808-533-2092


JOB NO.

SHEET C074

82 OF 225 SHTS

FILE ___ DRAWER ___ ___ FOLDER ___ ___

Plot date: 15-Apr-2020

Full Size Plot

Plot date: 15-Apr-2020
Full Size Plot

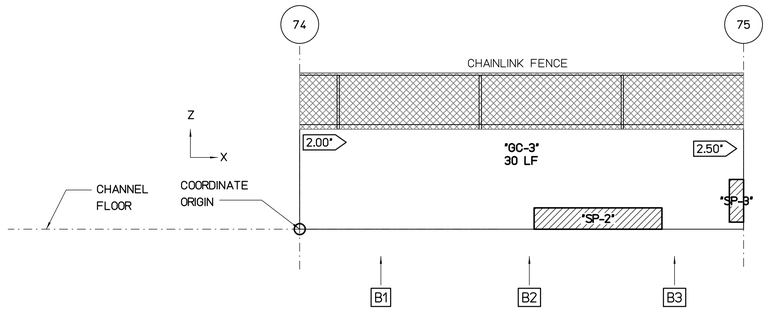


## WALL "B" FLATTEN VIEW

SCALE : 3/16" = 1'-0"

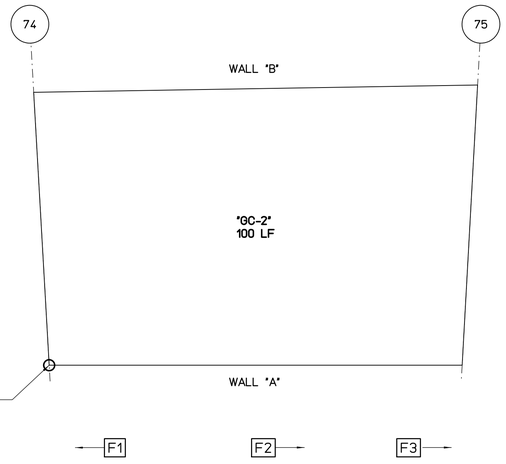


## FLOOR PLAN VIEW

SCALE : 3/16" = 1'-0"

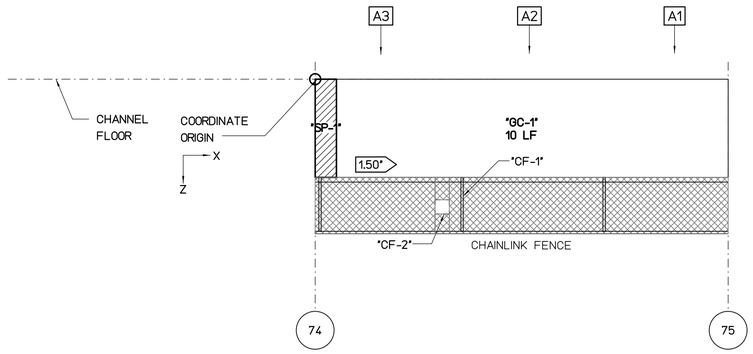


## WALL "A" FLATTEN VIEW

SCALE : 3/16" = 1'-0"

REPAIR LEGEND AND NOTES:

- [2] CRACK AND SPALL REPAIR TYPES, SEE SHEETS SR201 AND SR202 FOR DETAILS. TYPE [*] INDICATES NO-REPAIR
- (A) CHAINLINK FENCE REPAIR TYPES, SEE SHEETS SF201 AND SF202 FOR DETAILS
- [1.0] TOP OF WALL LEANING DISTANCE TOWARD CHANNEL IN INCHES, SEE SHEETS SL101 TO SL207 FOR CONCRETE LINING

PHOTO LEGEND:

- [A1] WALL "A" ELEVATION PHOTO IDENTIFICATION SEE FLATTEN VIEW FOR PHOTO LOCATION
- [B1] WALL "B" ELEVATION PHOTO IDENTIFICATION SEE FLATTEN VIEW FOR PHOTO LOCATION
- [F1] CHANNEL FLOOR PHOTO IDENTIFICATION SEE FLOOR PLAN VIEW FOR PHOTO LOCATION

B1



B2



B3



F1



F2



F3



A1



A2



A3



### SPALL REPAIR CHART

| MARK | LOCATION | REPAIR TYPE | SPALL DIMENSION L | SPALL DIMENSION W | SPALL DIMENSION D | SPALL VOLUME | SPALL CENTER COORDINATE X | SPALL CENTER COORDINATE Y OR Z | RATING |
|---|---|---|---|---|---|---|---|---|---|
| "SP-1" | WALL "A" | [*] | 18 | 83 | 3 | 4536 | 0.8 | 3.4 | 6 |
| "SP-2" | WALL "B" | [*] | 108 | 18 | 3 | 5832 | 21 | 0.8 | 6 |
| "SP-3" | WALL "B" | [*] | 12 | 36 | 2 | 864 | 30.7 | 2 | 7 |

### CHAINLINK FENCE REPAIR CHART

| MARK | LOCATION | REPAIR TYPE | POSTS | TOP RAIL | BOTTOM WIRE | BRACE | FABRIC |
|---|---|---|---|---|---|---|---|
| "CF-1" | WALL "A" | (A) | BENT 1 | - | - | - | - |
| "CF-2" | WALL "A" | (E) | | - | - | - | DAMAGED 1"x1" |

### CRACK REPAIR CHART

| MARK | LOCATION | REPAIR TYPE | GENERAL CRACKS (LF) | MAJOR CRACKS WIDTH (IN) | MAJOR CRACKS LENGTH (FT) | MAJOR CRACKS START PNT X | MAJOR CRACKS START PNT Y,Z | MAJOR CRACKS END PNT X | MAJOR CRACKS END PNT Y,Z | RATING |
|---|---|---|---|---|---|---|---|---|---|---|
| "GC-1" | WALL "A" | [*] | 10 | - | - | - | - | - | - | 8 |
| "GC-2" | FLOOR | [*] | 100 | - | - | - | - | - | - | 8 |
| "GC-3" | WALL "B" | [*] | 30 | - | - | - | - | - | - | 8 |

NOTES:

1- CONCRETE LINING IS PROVIDED IN THIS SEGMENT SEE SHEET SL201

2- THERE IS NO SPALL AND CRACK REPAIRS IN THIS SEGMENT

GRAPHIC SCALES:

0 1' 2' 4' 8' 12' 16'

3/16"=1'-0"

| REVISION NO. | DATE | REVISIONS | BY |
|---|---|---|---|

ATHER R. DAR
LICENSED PROFESSIONAL ENGINEER
No. 7808-S
HAWAII U.S.A.

Exp. Date: 4-30-20

THIS WORK WAS PREPARED BY ME OR UNDER MY SUPERVISION AND CONSTRUCTION OF THIS PROJECT WILL BE UNDER MY OBSERVATION

DEPARTMENT OF HAWAIIAN HOMELAND

# NANAKULI FLOOD CONTROL CHANNEL IMPROVEMENTS NANAKULI VALLEY, OAHU HAWAII

CHANNEL SEGMENT [075] REPAIR DETAILS

| | |
|---|---|
| DESIGNED BY: | TTP |
| DRAWN BY: | AK, AP, DL |
| CHECKED BY: | AD |
| SUPV: | |
| DATE: | 03/05/2019 |

HAWAII ENGINEERING GROUP, Inc.
Civil & Structural Engineers
1088 BISHOP STREET #2506
HONOLULU, HI 96813
Tel: 808-533-2092

JOB NO.

SHEET C075
83 OF 225 SHTS

FILE ___ DRAWER ___ ___ FOLDER ___ ___

Plot date: 15-Apr-2020
Full Size Plot

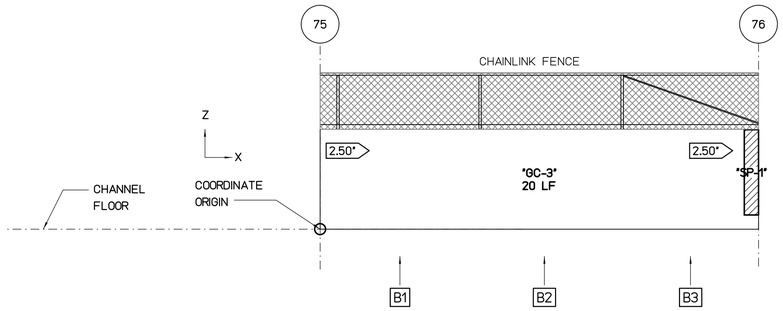


## WALL "B" FLATTEN VIEW

SCALE : 3/16" = 1'-0"

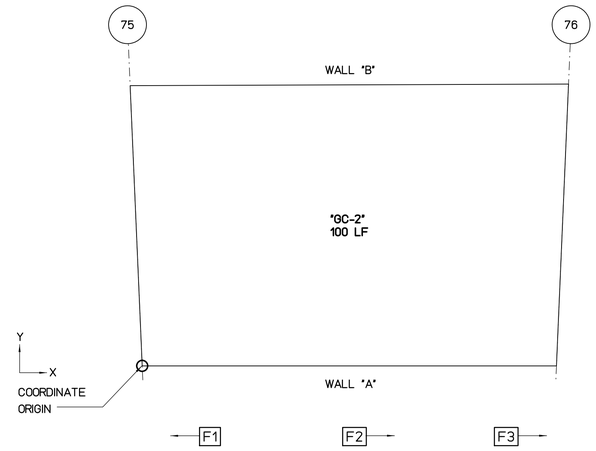


## FLOOR PLAN VIEW

SCALE : 3/16" = 1'-0"

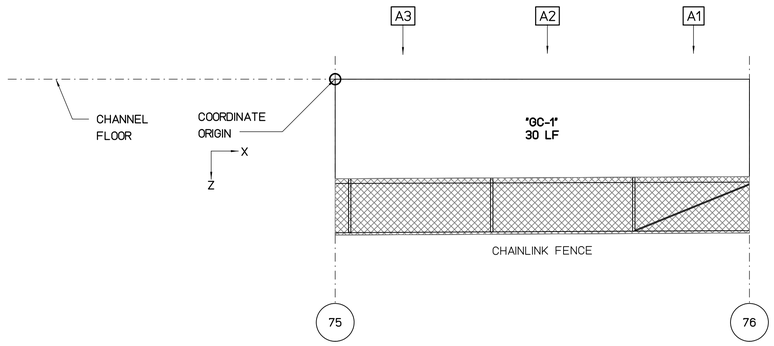


## WALL "A" FLATTEN VIEW

SCALE : 3/16" = 1'-0"

REPAIR LEGEND AND NOTES:

- [2] CRACK AND SPALL REPAIR TYPES, SEE SHEETS SR201 AND SR202 FOR DETAILS. TYPE [*] INDICATES NO-REPAIR
- (A) CHAINLINK FENCE REPAIR TYPES, SEE SHEETS SF201 AND SF202 FOR DETAILS
- 1.0> TOP OF WALL LEANING DISTANCE TOWARD CHANNEL IN INCHES, SEE SHEETS SL101 TO SL207 FOR CONCRETE LINING

PHOTO LEGEND:

- [A1] WALL "A" ELEVATION PHOTO IDENTIFICATION SEE FLATTEN VIEW FOR PHOTO LOCATION
- [B1] WALL "B" ELEVATION PHOTO IDENTIFICATION SEE FLATTEN VIEW FOR PHOTO LOCATION
- [F1] CHANNEL FLOOR PHOTO IDENTIFICATION SEE FLOOR PLAN VIEW FOR PHOTO LOCATION

B1



B2



B3



F1



F2



F3



A1



A2



A3



### SPALL REPAIR CHART

| MARK | LOCATION | REPAIR TYPE | SPALL DIMENSION L | SPALL DIMENSION W | SPALL DIMENSION D | SPALL VOLUME | SPALL CENTER COORDINATE X | SPALL CENTER COORDINATE Y OR Z | RATING |
|---|---|---|---|---|---|---|---|---|---|
| "SP-1" | WALL "B" | [*] | 12 | 72 | 3 | 2592 | 30.4 | 4 | 6 |

### CHAINLINK FENCE REPAIR CHART

| MARK | LOCATION | REPAIR TYPE | POSTS | TOP RAIL | BOTTOM WIRE | BRACE | FABRIC |
|---|---|---|---|---|---|---|---|

### CRACK REPAIR CHART

| MARK | LOCATION | REPAIR TYPE | GENERAL CRACKS (LF) | MAJOR CRACKS WIDTH (IN) | MAJOR CRACKS LENGTH (FT) | MAJOR CRACKS START PNT X | MAJOR CRACKS START PNT Y,Z | MAJOR CRACKS END PNT X | MAJOR CRACKS END PNT Y,Z | RATING |
|---|---|---|---|---|---|---|---|---|---|---|
| "GC-1" | WALL "A" | [*] | 30 | - | - | - | - | - | - | 8 |
| "GC-2" | FLOOR | [*] | 100 | - | - | - | - | - | - | 8 |
| "GC-3" | WALL "B" | [*] | 20 | - | - | - | - | - | - | 8 |

NOTES:

1- CONCRETE LINING IS PROVIDED IN THIS SEGMENT SEE SHEET SL201

2- THERE IS NO SPALL AND CRACK REPAIRS IN THIS SEGMENT

GRAPHIC SCALES:

0 1' 2' 4' 8' 12' 16'

3/16"=1'-0"

| REVISION NO. | DATE | REVISIONS | BY |
|---|---|---|---|

ATHER R. DAR
LICENSED PROFESSIONAL ENGINEER
No. 7808-S
HAWAII U.S.A.
Exp. Date: 4-30-20

THIS WORK WAS PREPARED BY ME OR UNDER MY SUPERVISION AND CONSTRUCTION OF THIS PROJECT WILL BE UNDER MY OBSERVATION

DEPARTMENT OF HAWAIIAN HOMELAND

# NANAKULI FLOOD CONTROL CHANNEL IMPROVEMENTS NANAKULI VALLEY, OAHU HAWAII

## CHANNEL SEGMENT 076 REPAIR DETAILS

| | |
|---|---|
| DESIGNED BY: | TTP |
| DRAWN BY: | AK, AP, DL |
| CHECKED BY: | AD |
| SUPV: | |
| DATE: | 03/05/2019 |

HAWAII ENGINEERING GROUP, Inc.
Civil & Structural Engineers
1088 BISHOP STREET #2506
HONOLULU, HI 96813
Tel: 808-533-2092

JOB NO.

SHEET C076
84 OF 225 SHTS

FILE ___ DRAWER ___ ___ FOLDER ___ ___

Plot date: 15-Apr-2020

Full Size Plot

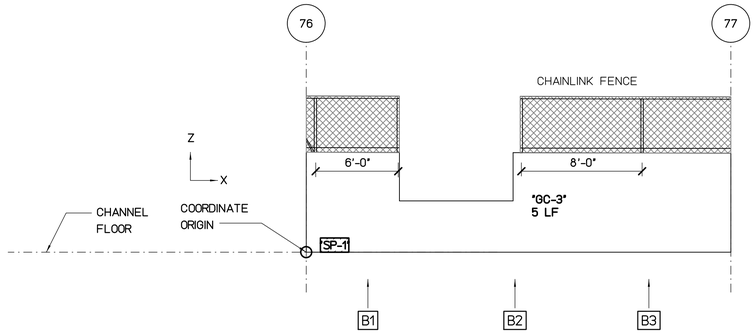


## WALL "B" FLATTEN VIEW

SCALE : 3/16" = 1'-0"

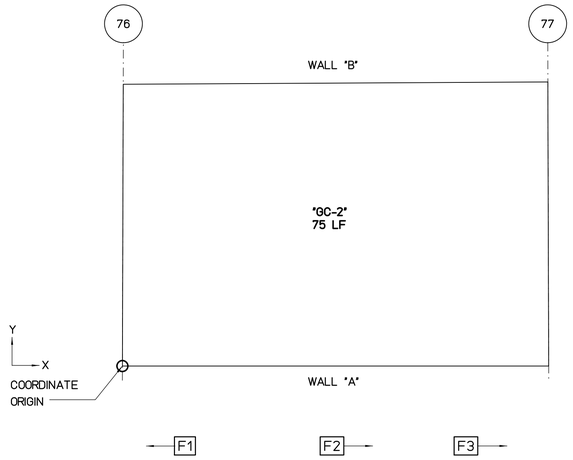


## FLOOR PLAN VIEW

SCALE : 3/16" = 1'-0"

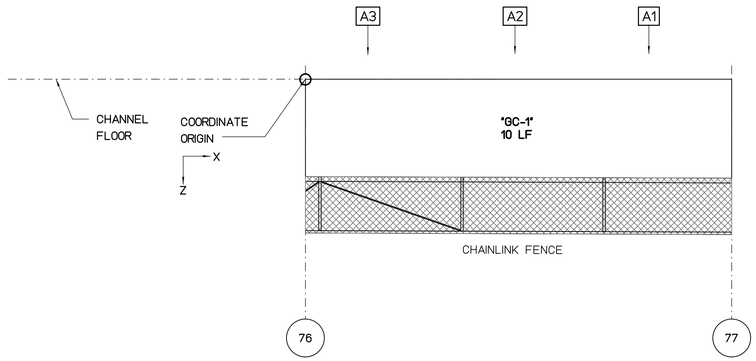


## WALL "A" FLATTEN VIEW

SCALE : 3/16" = 1'-0"

REPAIR LEGEND AND NOTES:

- 2 — CRACK AND SPALL REPAIR TYPES, SEE SHEETS SR201 AND SR202 FOR DETAILS. TYPE ⊠ INDICATES NO-REPAIR
- Ⓐ — CHAINLINK FENCE REPAIR TYPES, SEE SHEETS SF201 AND SF202 FOR DETAILS
- 1.0 — TOP OF WALL LEANING DISTANCE TOWARD CHANNEL IN INCHES, SEE SHEETS SL101 TO SL207 FOR CONCRETE LINING

PHOTO LEGEND:

- A1 — WALL "A" ELEVATION PHOTO IDENTIFICATION SEE FLATTEN VIEW FOR PHOTO LOCATION
- B1 — WALL "B" ELEVATION PHOTO IDENTIFICATION SEE FLATTEN VIEW FOR PHOTO LOCATION
- F1 — CHANNEL FLOOR PHOTO IDENTIFICATION SEE FLOOR PLAN VIEW FOR PHOTO LOCATION

B1



B2



B3



F1



F2



F3



A1



A2



A3



### SPALL REPAIR CHART

| MARK | LOCATION | REPAIR TYPE | SPALL DIMENSION L | SPALL DIMENSION W | SPALL DIMENSION D | SPALL VOLUME | SPALL CENTER COORDINATE X | SPALL CENTER COORDINATE Y OR Z | RATING |
|---|---|---|---|---|---|---|---|---|---|
| "SP-1" | WALL "B" | ⊠ | 24 | 12 | 2 | 576 | 2 | 0.5 | 7 |

### CHAINLINK FENCE REPAIR CHART

| MARK | LOCATION | REPAIR TYPE | POSTS | TOP RAIL | BOTTOM WIRE | BRACE | FABRIC |
|---|---|---|---|---|---|---|---|

### CRACK REPAIR CHART

| MARK | LOCATION | REPAIR TYPE | GENERAL CRACKS (LF) | MAJOR CRACKS WIDTH (IN) | MAJOR CRACKS LENGTH (FT) | MAJOR CRACKS START PNT X | MAJOR CRACKS START PNT Y,Z | MAJOR CRACKS END PNT X | MAJOR CRACKS END PNT Y,Z | RATING |
|---|---|---|---|---|---|---|---|---|---|---|
| "GC-1" | WALL "A" | ⊠ | 10 | - | - | - | - | - | - | 8 |
| "GC-2" | FLOOR | ⊠ | 75 | - | - | - | - | - | - | 8 |
| "GC-3" | WALL "B" | ⊠ | 5 | - | - | - | - | - | - | 9 |

NOTES:

1- CONCRETE LINING IS PROVIDED IN THIS SEGMENT SEE SHEET SL201

2- THERE IS NO SPALL AND CRACK REPAIRS IN THIS SEGMENT

GRAPHIC SCALES:

0 1' 2' 4' 8' 12' 16'

3/16"=1'-0"

| REVISION NO. | DATE | REVISIONS | BY |
|---|---|---|---|

ATHER R. DAR
LICENSED PROFESSIONAL ENGINEER
No. 7808-S
HAWAII U.S.A.
Exp. Date: 4-30-20

THIS WORK WAS PREPARED BY ME OR UNDER MY SUPERVISION AND CONSTRUCTION OF THIS PROJECT WILL BE UNDER MY OBSERVATION

DEPARTMENT OF HAWAIIAN HOMELAND

# NANAKULI FLOOD CONTROL CHANNEL IMPROVEMENTS NANAKULI VALLEY, OAHU HAWAII

CHANNEL SEGMENT 077 REPAIR DETAILS

| | |
|---|---|
| DESIGNED BY: | TTP |
| DRAWN BY: | AK, AP, DL |
| CHECKED BY: | AD |
| SUPV: | |
| DATE: | 03/05/2019 |

HAWAII ENGINEERING GROUP, Inc.
Civil & Structural Engineers
1088 BISHOP STREET #2506
HONOLULU, HI 96813
Tel: 808-533-2092

JOB NO.

SHEET C077
85 OF 225 SHTS

FILE ___ DRAWER ___ ___ FOLDER ___ ___

Plot date: 15-Apr-2020
Full Size Plot

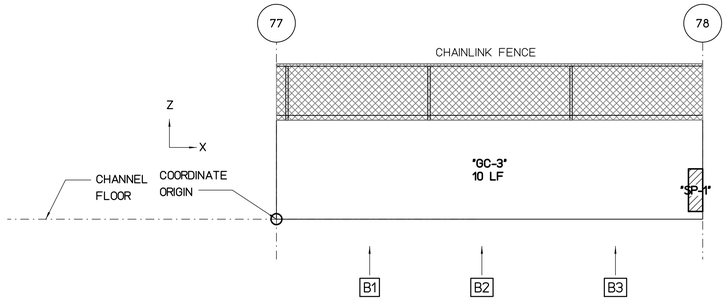


## WALL "B" FLATTEN VIEW

SCALE : 3/16" = 1'-0"

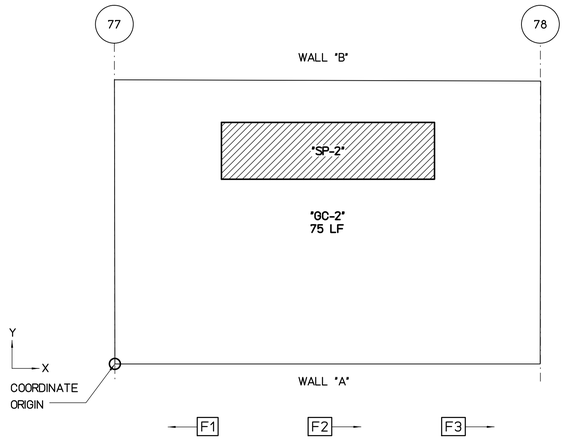


## FLOOR PLAN VIEW

SCALE : 3/16" = 1'-0"

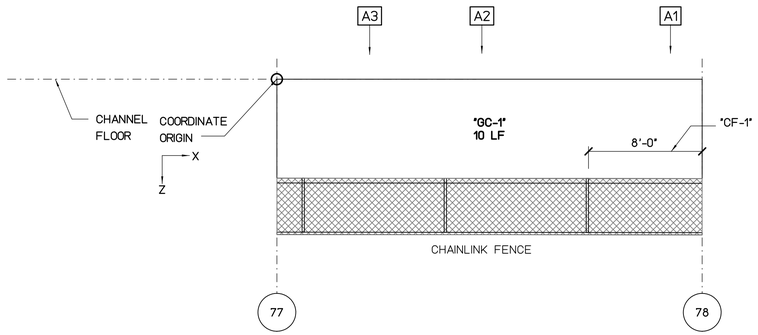


## WALL "A" FLATTEN VIEW

SCALE : 3/16" = 1'-0"

REPAIR LEGEND AND NOTES:

- 2 — CRACK AND SPALL REPAIR TYPES, SEE SHEETS SR201 AND SR202 FOR DETAILS. TYPE [*] INDICATES NO-REPAIR
- (A) — CHAINLINK FENCE REPAIR TYPES, SEE SHEETS SF201 AND SF202 FOR DETAILS
- 1.0 — TOP OF WALL LEANING DISTANCE TOWARD CHANNEL IN INCHES, SEE SHEETS SL101 TO SL207 FOR CONCRETE LINING

PHOTO LEGEND:

- A1 — WALL "A" ELEVATION PHOTO IDENTIFICATION SEE FLATTEN VIEW FOR PHOTO LOCATION
- B1 — WALL "B" ELEVATION PHOTO IDENTIFICATION SEE FLATTEN VIEW FOR PHOTO LOCATION
- F1 — CHANNEL FLOOR PHOTO IDENTIFICATION SEE FLOOR PLAN VIEW FOR PHOTO LOCATION

B1



B2



B3



F1



F2



F3



A1



A2



A3



### SPALL REPAIR CHART

| MARK | LOCATION | REPAIR TYPE | SPALL DIMENSION L | SPALL DIMENSION W | SPALL DIMENSION D | SPALL VOLUME | SPALL CENTER COORDINATE X | SPALL CENTER COORDINATE Y OR Z | RATING |
|---|---|---|---|---|---|---|---|---|---|
| "SP-1" | WALL "B" | 3 | 12 | 36 | 2 | 864 | 29.5 | 2 | 7 |
| "SP-2" | FLOOR | 3 | 180 | 48 | 2 | 17280 | 15 | 15 | 7 |

### CHAINLINK FENCE REPAIR CHART

| MARK | LOCATION | REPAIR TYPE | POSTS | TOP RAIL | BOTTOM WIRE | BRACE | FABRIC |
|---|---|---|---|---|---|---|---|
| "CF-1" | WALL "A" | (E) | - | - | - | - | DAMAGED 8'x4' |

### CRACK REPAIR CHART

| MARK | LOCATION | REPAIR TYPE | GENERAL CRACKS (LF) | MAJOR CRACKS WIDTH (IN) | MAJOR CRACKS LENGTH (FT) | MAJOR CRACKS START PNT X | MAJOR CRACKS START PNT Y,Z | MAJOR CRACKS END PNT X | MAJOR CRACKS END PNT Y,Z | RATING |
|---|---|---|---|---|---|---|---|---|---|---|
| "GC-1" | WALL "A" | * | 10 | - | - | - | - | - | - | 8 |
| "GC-2" | FLOOR | * | 75 | - | - | - | - | - | - | 8 |
| "GC-3" | WALL "B" | * | 10 | - | - | - | - | - | - | 8 |

GRAPHIC SCALES:

0 1' 2' 4' 8' 12' 16'

3/16"=1'-0"

| REVISION NO. | DATE | REVISIONS | BY |
|---|---|---|---|

ATHER R. DAR
LICENSED PROFESSIONAL ENGINEER
No. 7808-S
HAWAII U.S.A.
Exp. Date: 4-30-20

THIS WORK WAS PREPARED BY ME OR UNDER MY SUPERVISION AND CONSTRUCTION OF THIS PROJECT WILL BE UNDER MY OBSERVATION

DEPARTMENT OF HAWAIIAN HOMELAND

NANAKULI FLOOD CONTROL
CHANNEL IMPROVEMENTS
NANAKULI VALLEY, OAHU HAWAII

CHANNEL SEGMENT 078 REPAIR DETAILS

| | |
|---|---|
| DESIGNED BY: | TTP |
| DRAWN BY: | AK, AP, DL |
| CHECKED BY: | AD |
| SUPV: | |
| DATE: | 03/05/2019 |

HAWAII ENGINEERING GROUP, Inc.
Civil & Structural Engineers
1088 BISHOP STREET #2506
HONOLULU, HI 96813
Tel: 808-533-2092

JOB NO.

SHEET C078
86 OF 225 SHTS

FILE ___ DRAWER ___ ___ FOLDER ___ ___

Plot date: 15-Apr-2020
Full Size Plot

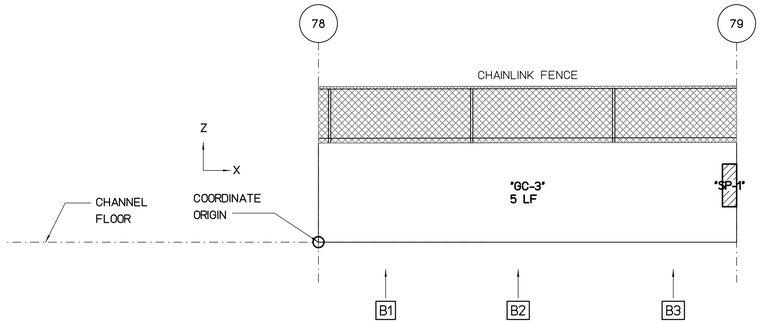


## WALL "B" FLATTEN VIEW

SCALE : 3/16" = 1'-0"

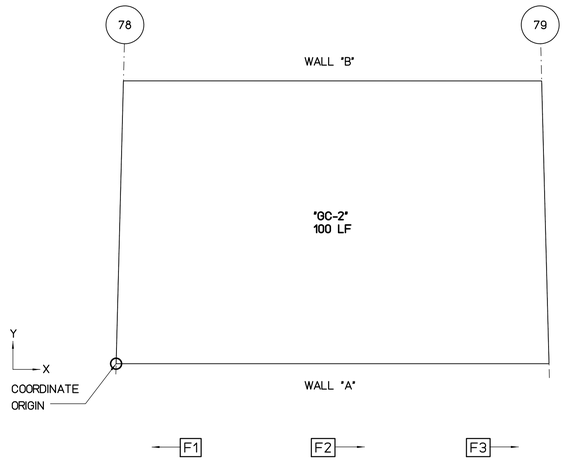


## FLOOR PLAN VIEW

SCALE : 3/16" = 1'-0"

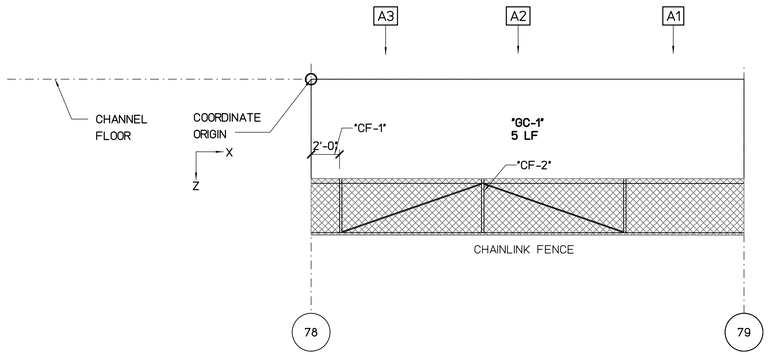


## WALL "A" FLATTEN VIEW

SCALE : 3/16" = 1'-0"

REPAIR LEGEND AND NOTES:

- [2] CRACK AND SPALL REPAIR TYPES, SEE SHEETS SR201 AND SR202 FOR DETAILS. TYPE [*] INDICATES NO-REPAIR
- (A) CHAINLINK FENCE REPAIR TYPES, SEE SHEETS SF201 AND SF202 FOR DETAILS
- [1.0] TOP OF WALL LEANING DISTANCE TOWARD CHANNEL IN INCHES, SEE SHEETS SL101 TO SL207 FOR CONCRETE LINING

PHOTO LEGEND:

- [A1] WALL "A" ELEVATION PHOTO IDENTIFICATION SEE FLATTEN VIEW FOR PHOTO LOCATION
- [B1] WALL "B" ELEVATION PHOTO IDENTIFICATION SEE FLATTEN VIEW FOR PHOTO LOCATION
- [F1] CHANNEL FLOOR PHOTO IDENTIFICATION SEE FLOOR PLAN VIEW FOR PHOTO LOCATION

B1



B2



B3



F1



F2



F3



A1



A2



A3



### SPALL REPAIR CHART

| MARK | LOCATION | REPAIR TYPE | SPALL DIMENSION | | | SPALL VOLUME | SPALL CENTER COORDINATE | | RATING |
|---|---|---|---|---|---|---|---|---|---|
| | | | L | W | D | | X | Y OR Z | |
| "SP-1" | WALL "B" | [3] | 12 | 36 | 2 | 864 | 28.9 | 4 | 7 |

### CHAINLINK FENCE REPAIR CHART

| MARK | LOCATION | REPAIR TYPE | POSTS | TOP RAIL | BOTTOM WIRE | BRACE | FABRIC |
|---|---|---|---|---|---|---|---|
| "CF-1" | WALL "A" | (E) | - | - | - | - | DAMAGED 2'x4' |
| "CF-2" | WALL "A" | (A) | BENT 1 | - | - | - | - |

### CRACK REPAIR CHART

| MARK | LOCATION | REPAIR TYPE | GENERAL CRACKS (LF) | MAJOR CRACKS | | | | | | RATING |
|---|---|---|---|---|---|---|---|---|---|---|
| | | | | WIDTH (IN) | LENGTH (FT) | START PNT X | START PNT Y,Z | END PNT X | END PNT Y,Z | |
| "GC-1" | WALL "A" | [*] | 5 | - | - | - | - | - | - | 9 |
| "GC-2" | FLOOR | [*] | 100 | - | - | - | - | - | - | 8 |
| "GC-3" | WALL "B" | [*] | 5 | - | - | - | - | - | - | 9 |

GRAPHIC SCALES:

0 1' 2' 4' 8' 12' 16'

3/16"=1'-0"

| REVISION NO. | DATE | REVISIONS | BY |
|---|---|---|---|

ARTHER R. DAR
LICENSED PROFESSIONAL ENGINEER
No. 7808-S
HAWAII U.S.A.
Exp. Date: 4-30-20

THIS WORK WAS PREPARED BY ME OR UNDER MY SUPERVISION AND CONSTRUCTION OF THIS PROJECT WILL BE UNDER MY OBSERVATION

DEPARTMENT OF HAWAIIAN HOMELAND

# NANAKULI FLOOD CONTROL CHANNEL IMPROVEMENTS NANAKULI VALLEY, OAHU HAWAII

CHANNEL SEGMENT [079] REPAIR DETAILS

| | |
|---|---|
| DESIGNED BY: | TTP |
| DRAWN BY: | AK, AP, DL |
| CHECKED BY: | AD |
| SUPV: | |
| DATE: | 03/05/2019 |

HAWAII ENGINEERING GROUP, Inc.
Civil & Structural Engineers
1088 BISHOP STREET #2506
HONOLULU, HI 96813
Tel: 808-533-2092

JOB NO.

SHEET C079
87 OF 225 SHTS

FILE ___ DRAWER ___ ___ FOLDER ___ ___

Plot date: 15-Apr-2020
Full Size Plot

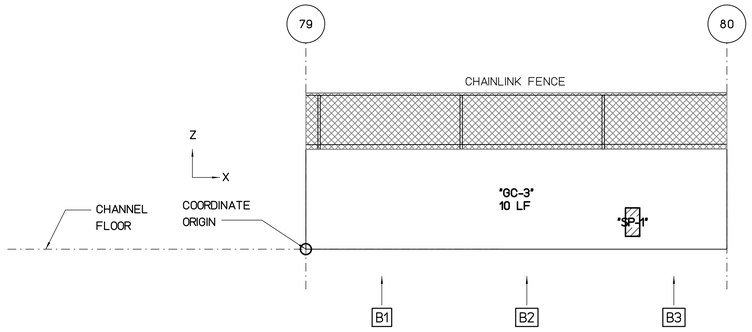


## WALL "B" FLATTEN VIEW

SCALE : 3/16" = 1'-0"

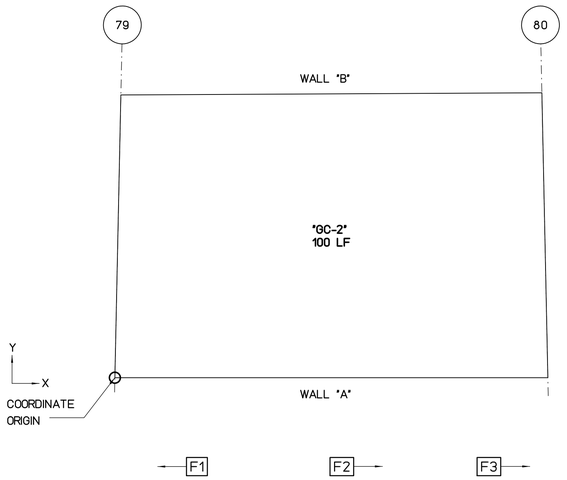


## FLOOR PLAN VIEW

SCALE : 3/16" = 1'-0"

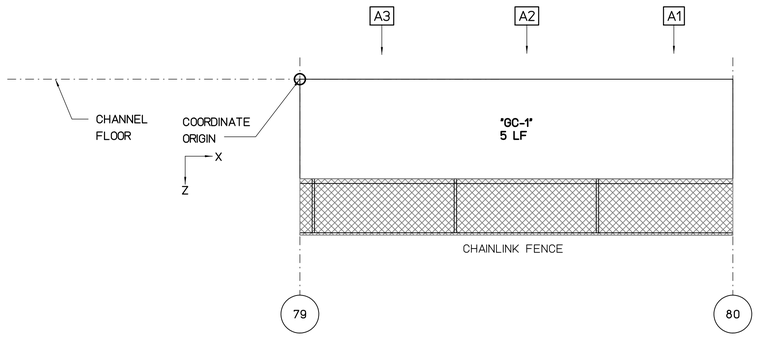


## WALL "A" FLATTEN VIEW

SCALE : 3/16" = 1'-0"

REPAIR LEGEND AND NOTES:

- [2] CRACK AND SPALL REPAIR TYPES, SEE SHEETS SR201 AND SR202 FOR DETAILS. TYPE [*] INDICATES NO-REPAIR
- (A) CHAINLINK FENCE REPAIR TYPES, SEE SHEETS SF201 AND SF202 FOR DETAILS
- [1.0] TOP OF WALL LEANING DISTANCE TOWARD CHANNEL IN INCHES, SEE SHEETS SL101 TO SL207 FOR CONCRETE LINING

PHOTO LEGEND:

- [A1] WALL "A" ELEVATION PHOTO IDENTIFICATION SEE FLATTEN VIEW FOR PHOTO LOCATION
- [B1] WALL "B" ELEVATION PHOTO IDENTIFICATION SEE FLATTEN VIEW FOR PHOTO LOCATION
- [F1] CHANNEL FLOOR PHOTO IDENTIFICATION SEE FLOOR PLAN VIEW FOR PHOTO LOCATION

B1



B2



B3



F1



F2



F3



A1



A2



A3



### SPALL REPAIR CHART

| MARK | LOCATION | REPAIR TYPE | SPALL DIMENSION L | SPALL DIMENSION W | SPALL DIMENSION D | SPALL VOLUME | SPALL CENTER COORDINATE X | SPALL CENTER COORDINATE Y OR Z | RATING |
|---|---|---|---|---|---|---|---|---|---|
| "SP-1" | WALL "B" | [3] | 12 | 24 | 2 | 576 | 23 | 1.9 | 6 |

### CHAINLINK FENCE REPAIR CHART

| MARK | LOCATION | REPAIR TYPE | POSTS | TOP RAIL | BOTTOM WIRE | BRACE | FABRIC |
|---|---|---|---|---|---|---|---|

### CRACK REPAIR CHART

| MARK | LOCATION | REPAIR TYPE | GENERAL CRACKS (LF) | MAJOR CRACKS WIDTH (IN) | MAJOR CRACKS LENGTH (FT) | MAJOR CRACKS START PNT X | MAJOR CRACKS START PNT Y,Z | MAJOR CRACKS END PNT X | MAJOR CRACKS END PNT Y,Z | RATING |
|---|---|---|---|---|---|---|---|---|---|---|
| "GC-1" | WALL "A" | [*] | 5 | - | - | - | - | - | - | 9 |
| "GC-2" | FLOOR | [*] | 100 | - | - | - | - | - | - | 8 |
| "GC-3" | WALL "B" | [*] | 10 | - | - | - | - | - | - | 8 |

GRAPHIC SCALES:

0 1' 2' 4' 8' 12' 16'

3/16"=1'-0"

| REVISION NO. | DATE | REVISIONS | BY |
|---|---|---|---|

ATHER R. DAR
LICENSED PROFESSIONAL ENGINEER
No. 7808-S
HAWAII U.S.A.
Exp. Date: 4-30-20

THIS WORK WAS PREPARED BY ME OR UNDER MY SUPERVISION AND CONSTRUCTION OF THIS PROJECT WILL BE UNDER MY OBSERVATION

DEPARTMENT OF HAWAIIAN HOMELAND

# NANAKULI FLOOD CONTROL CHANNEL IMPROVEMENTS NANAKULI VALLEY, OAHU HAWAII

## CHANNEL SEGMENT [080] REPAIR DETAILS

| | |
|---|---|
| DESIGNED BY: | TTP |
| DRAWN BY: | AK, AP, DL |
| CHECKED BY: | AD |
| SUPV: | |
| DATE: | 03/05/2019 |

HAWAII ENGINEERING GROUP, Inc.
Civil & Structural Engineers
1088 BISHOP STREET #2506
HONOLULU, HI 96813
Tel: 808-533-2092

JOB NO.

SHEET C080
88 OF 225 SHTS

FILE ___ DRAWER ___ ___ FOLDER ___ ___

Plot date: 15-Apr-2020
Full Size Plot

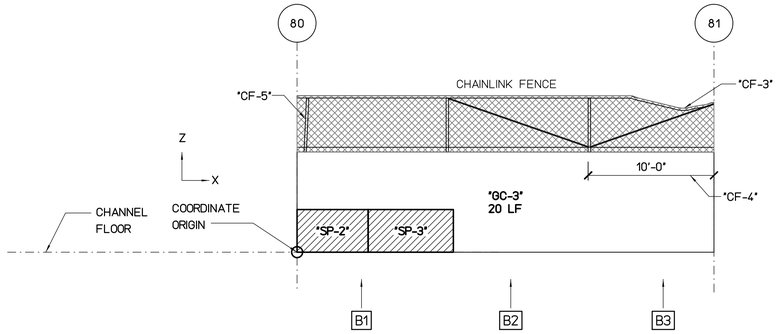


## WALL "B" FLATTEN VIEW

SCALE : 3/16" = 1'-0"

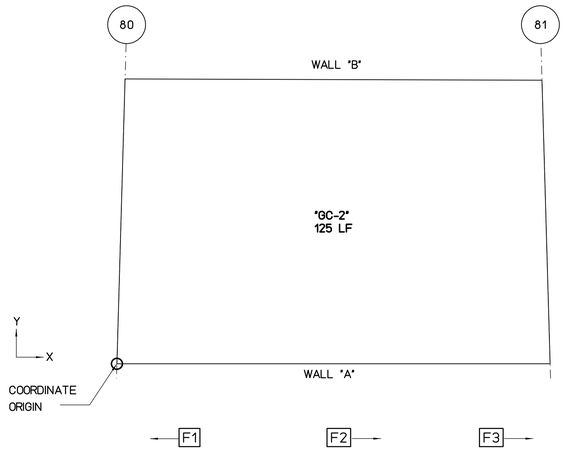


## FLOOR PLAN VIEW

SCALE : 3/16" = 1'-0"

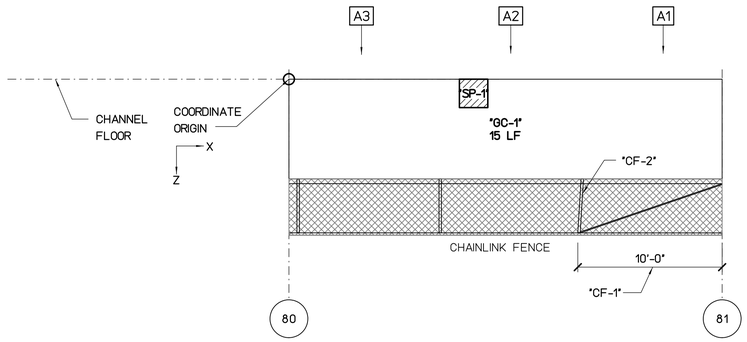


## WALL "A" FLATTEN VIEW

SCALE : 3/16" = 1'-0"

REPAIR LEGEND AND NOTES:

- 2 — CRACK AND SPALL REPAIR TYPES, SEE SHEETS SR201 AND SR202 FOR DETAILS. TYPE [*] INDICATES NO-REPAIR
- (A) — CHAINLINK FENCE REPAIR TYPES, SEE SHEETS SF201 AND SF202 FOR DETAILS
- 1.0 — TOP OF WALL LEANING DISTANCE TOWARD CHANNEL IN INCHES, SEE SHEETS SL101 TO SL207 FOR CONCRETE LINING

PHOTO LEGEND:

- A1 — WALL "A" ELEVATION PHOTO IDENTIFICATION SEE FLATTEN VIEW FOR PHOTO LOCATION
- B1 — WALL "B" ELEVATION PHOTO IDENTIFICATION SEE FLATTEN VIEW FOR PHOTO LOCATION
- F1 — CHANNEL FLOOR PHOTO IDENTIFICATION SEE FLOOR PLAN VIEW FOR PHOTO LOCATION

B1



B2



B3



F1



F2



F3



A1



A2



A3



### SPALL REPAIR CHART

| MARK | LOCATION | REPAIR TYPE | SPALL DIMENSION L | SPALL DIMENSION W | SPALL DIMENSION D | SPALL VOLUME | SPALL CENTER COORDINATE X | SPALL CENTER COORDINATE Y OR Z | RATING |
|---|---|---|---|---|---|---|---|---|---|
| "SP-1" | WALL "A" | 3 | 24 | 24 | 3 | 1728 | 13 | 0.5 | 6 |
| "SP-2" | WALL "B" | 3 | 60 | 36 | 3 | 6480 | 2 | 1 | 6 |
| "SP-3" | WALL "B" | 3 | 72 | 36 | 2 | 5184 | 6 | 1 | 7 |

### CHAINLINK FENCE REPAIR CHART

| MARK | LOCATION | REPAIR TYPE | POSTS | TOP RAIL | BOTTOM WIRE | BRACE | FABRIC |
|---|---|---|---|---|---|---|---|
| "CF-1" | WALL "A" | C | - | CORRODED 10' | - | - | - |
| "CF-2" | WALL "A" | A | BENT 1 | - | - | - | - |
| "CF-3" | WALL "B" | C | - | BENT 30' | - | - | - |
| "CF-4" | WALL "B" | E | - | - | - | - | DAMAGED 10'x4' |
| "CF-5" | WALL "B" | A | BENT 1 | - | - | - | - |

### CRACK REPAIR CHART

| MARK | LOCATION | REPAIR TYPE | GENERAL CRACKS (LF) | MAJOR CRACKS WIDTH (IN) | MAJOR CRACKS LENGTH (FT) | MAJOR CRACKS START PNT X | MAJOR CRACKS START PNT Y,Z | MAJOR CRACKS END PNT X | MAJOR CRACKS END PNT Y,Z | RATING |
|---|---|---|---|---|---|---|---|---|---|---|
| "GC-1" | WALL "A" | * | 15 | - | - | - | - | - | - | 8 |
| "GC-2" | FLOOR | * | 125 | - | - | - | - | - | - | 8 |
| "GC-3" | WALL "B" | * | 20 | - | - | - | - | - | - | 8 |

GRAPHIC SCALES:

0 1' 2' 4' 8' 12' 16'

3/16"=1'-0"

| REVISION NO. | DATE | REVISIONS | BY |
|---|---|---|---|

ATHER R. DAR
LICENSED PROFESSIONAL ENGINEER
No. 7808-S
HAWAII U.S.A.
Exp. Date: 4-30-20

THIS WORK WAS PREPARED BY ME OR UNDER MY SUPERVISION AND CONSTRUCTION OF THIS PROJECT WILL BE UNDER MY OBSERVATION

DEPARTMENT OF HAWAIIAN HOMELAND

# NANAKULI FLOOD CONTROL CHANNEL IMPROVEMENTS NANAKULI VALLEY, OAHU HAWAII

## CHANNEL SEGMENT 081 REPAIR DETAILS

| | |
|---|---|
| DESIGNED BY: | TTP |
| DRAWN BY: | AK, AP, DL |
| CHECKED BY: | AD |
| SUPV: | |
| DATE: | 03/05/2019 |

HAWAII ENGINEERING GROUP, Inc.
Civil & Structural Engineers
1088 BISHOP STREET #2506
HONOLULU, HI 96813
Tel: 808-533-2092

JOB NO.

SHEET C081
89 OF 225 SHTS

FILE ___ DRAWER ___ ___ FOLDER ___ ___

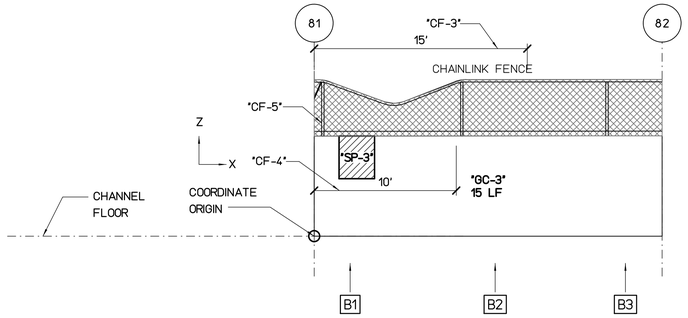


## WALL "B" FLATTEN VIEW

SCALE : 3/16" = 1'-0"

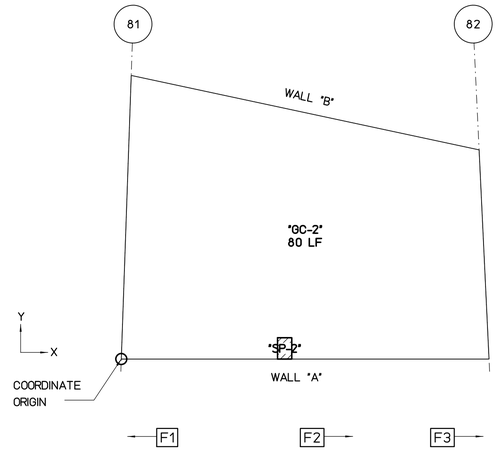


## FLOOR PLAN VIEW

SCALE : 3/16" = 1'-0"

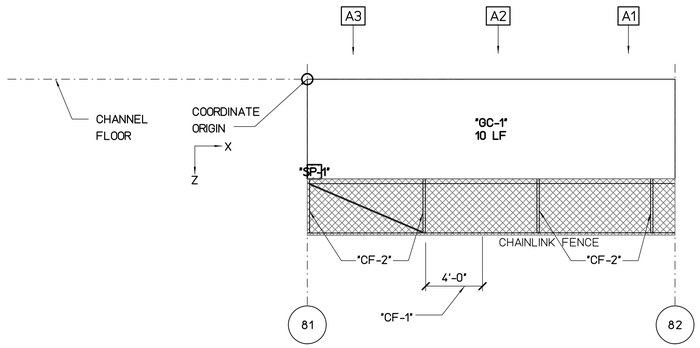


## WALL "A" FLATTEN VIEW

SCALE : 3/16" = 1'-0"

REPAIR LEGEND AND NOTES:

- 2 — CRACK AND SPALL REPAIR TYPES, SEE SHEETS SR201 AND SR202 FOR DETAILS. TYPE ⊠ INDICATES NO-REPAIR
- Ⓐ — CHAINLINK FENCE REPAIR TYPES, SEE SHEETS SF201 AND SF202 FOR DETAILS
- 1.0 — TOP OF WALL LEANING DISTANCE TOWARD CHANNEL IN INCHES, SEE SHEETS SL101 TO SL207 FOR CONCRETE LINING

PHOTO LEGEND:

- A1 — WALL "A" ELEVATION PHOTO IDENTIFICATION SEE FLATTEN VIEW FOR PHOTO LOCATION
- B1 — WALL "B" ELEVATION PHOTO IDENTIFICATION SEE FLATTEN VIEW FOR PHOTO LOCATION
- F1 — CHANNEL FLOOR PHOTO IDENTIFICATION SEE FLOOR PLAN VIEW FOR PHOTO LOCATION

B1



B2



B3



F1



F2



F3



A1



A2



A3



### SPALL REPAIR CHART

| MARK | LOCATION | REPAIR TYPE | SPALL DIMENSION L | SPALL DIMENSION W | SPALL DIMENSION D | SPALL VOLUME | SPALL CENTER COORDINATE X | SPALL CENTER COORDINATE Y OR Z | RATING |
|---|---|---|---|---|---|---|---|---|---|
| "SP-1" | WALL "A" | 3 | 12 | 12 | 6 | 864 | 0.5 | 6.5 | 6 |
| "SP-2" | FLOOR | 3 | 12 | 18 | 3 | 648 | 11.5 | 0.8 | 7 |
| "SP-3" | WALL "B" | 3 | 30 | 36 | 2 | 2160 | 3 | 5.5 | 7 |

### CHAINLINK FENCE REPAIR CHART

| MARK | LOCATION | REPAIR TYPE | POSTS | TOP RAIL | BOTTOM WIRE | BRACE | FABRIC |
|---|---|---|---|---|---|---|---|
| "CF-1" | WALL "A" | Ⓒ | - | BENT 4' | - | - | - |
| "CF-2" | WALL "A" | Ⓐ | CORRODED 4 | - | - | - | - |
| "CF-3" | WALL "B" | Ⓒ | - | BENT 15' | - | - | - |
| "CF-4" | WALL "B" | Ⓔ | - | - | - | - | DAMAGED 10'x4' |
| "CF-5" | WALL "B" | Ⓐ | BENT 1 | - | - | - | - |

### CRACK REPAIR CHART

| MARK | LOCATION | REPAIR TYPE | GENERAL CRACKS (LF) | MAJOR CRACKS WIDTH (IN) | MAJOR CRACKS LENGTH (FT) | MAJOR CRACKS START PNT X | MAJOR CRACKS START PNT Y,Z | MAJOR CRACKS END PNT X | MAJOR CRACKS END PNT Y,Z | RATING |
|---|---|---|---|---|---|---|---|---|---|---|
| "GC-1" | WALL "A" | ⊠ | 10 | - | - | - | - | - | - | 8 |
| "GC-2" | FLOOR | ⊠ | 80 | - | - | - | - | - | - | 8 |
| "GC-3" | WALL "B" | ⊠ | 15 | - | - | - | - | - | - | 8 |

GRAPHIC SCALES:

0 1' 2' 4' 8' 12' 16'

3/16"=1'-0"

| REVISION NO. | DATE | REVISIONS | BY |
|---|---|---|---|

ARTHER R. DAR
LICENSED PROFESSIONAL ENGINEER
No. 7808-S
HAWAII U.S.A.

Exp. Date: 4-30-20

THIS WORK WAS PREPARED BY ME OR UNDER MY SUPERVISION AND CONSTRUCTION OF THIS PROJECT WILL BE UNDER MY OBSERVATION

DEPARTMENT OF HAWAIIAN HOMELAND

# NANAKULI FLOOD CONTROL CHANNEL IMPROVEMENTS NANAKULI VALLEY, OAHU HAWAII

## CHANNEL SEGMENT 082 REPAIR DETAILS

| | |
|---|---|
| DESIGNED BY: | TTP |
| DRAWN BY: | AK, AP, DL |
| CHECKED BY: | AD |
| SUPV: | |
| DATE: | 03/05/2019 |


HAWAII ENGINEERING GROUP, Inc.
Civil & Structural Engineers
1088 BISHOP STREET #2506
HONOLULU, HI 96813
Tel: 808-533-2092


JOB NO.

SHEET C082

90 OF 225 SHTS

FILE ___ DRAWER ___ ___ FOLDER ___ ___

Plot date: 15-Apr-2020

Full Size Plot

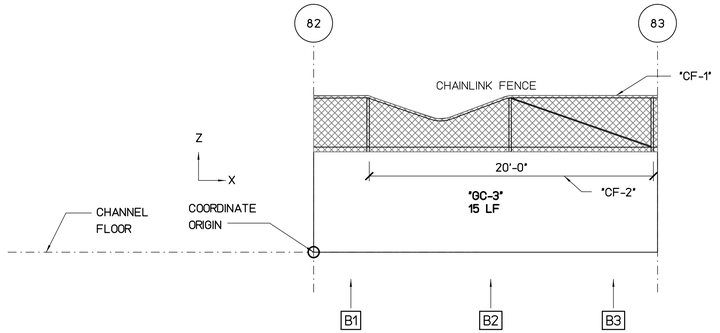


## WALL "B" FLATTEN VIEW

SCALE : 3/16" = 1'-0"

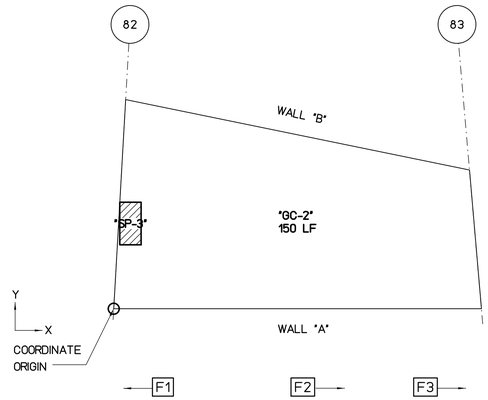


## FLOOR PLAN VIEW

SCALE : 3/16" = 1'-0"

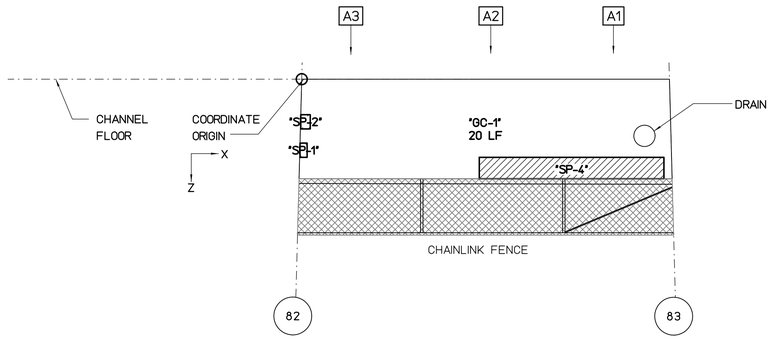


## WALL "A" FLATTEN VIEW

SCALE : 3/16" = 1'-0"

REPAIR LEGEND AND NOTES:

- 2 — CRACK AND SPALL REPAIR TYPES, SEE SHEETS SR201 AND SR202 FOR DETAILS. TYPE * INDICATES NO-REPAIR
- Ⓐ — CHAINLINK FENCE REPAIR TYPES, SEE SHEETS SF201 AND SF202 FOR DETAILS
- 1.0 — TOP OF WALL LEANING DISTANCE TOWARD CHANNEL IN INCHES, SEE SHEETS SL101 TO SL207 FOR CONCRETE LINING

PHOTO LEGEND:

- A1 — WALL "A" ELEVATION PHOTO IDENTIFICATION SEE FLATTEN VIEW FOR PHOTO LOCATION
- B1 — WALL "B" ELEVATION PHOTO IDENTIFICATION SEE FLATTEN VIEW FOR PHOTO LOCATION
- F1 — CHANNEL FLOOR PHOTO IDENTIFICATION SEE FLOOR PLAN VIEW FOR PHOTO LOCATION

B1



B2



B3



F1



F2



F3



A1



A2



A3



### SPALL REPAIR CHART

| MARK | LOCATION | REPAIR TYPE | SPALL DIMENSION L | SPALL DIMENSION W | SPALL DIMENSION D | SPALL VOLUME | SPALL CENTER COORDINATE X | SPALL CENTER COORDINATE Y OR Z | RATING |
|---|---|---|---|---|---|---|---|---|---|
| "SP-1" | WALL "A" | 3 | 6 | 12 | 2 | 144 | 0.1 | 5 | 7 |
| "SP-2" | WALL "A" | 3 | 8 | 12 | 2 | 192 | 0.3 | 3 | 7 |
| "SP-3" | FLOOR | 3 | 18 | 36 | 2 | 1296 | 1.2 | 6 | 7 |
| "SP-4" | WALL "A" | 3 | 156 | 18 | 2 | 5616 | 19 | 6.3 | 7 |

### CHAINLINK FENCE REPAIR CHART

| MARK | LOCATION | REPAIR TYPE | POSTS | TOP RAIL | BOTTOM WIRE | BRACE | FABRIC |
|---|---|---|---|---|---|---|---|
| "CF-1" | WALL "B" | Ⓒ | - | BENT 20' | - | - | - |
| "CF-2" | WALL "B" | Ⓔ | - | - | - | - | DAMAGED 20'x4' |

### CRACK REPAIR CHART

| MARK | LOCATION | REPAIR TYPE | GENERAL CRACKS (LF) | MAJOR CRACKS WIDTH (IN) | MAJOR CRACKS LENGTH (FT) | MAJOR CRACKS START PNT X | MAJOR CRACKS START PNT Y,Z | MAJOR CRACKS END PNT X | MAJOR CRACKS END PNT Y,Z | RATING |
|---|---|---|---|---|---|---|---|---|---|---|
| "GC-1" | WALL "A" | * | 20 | - | - | - | - | - | - | 8 |
| "GC-2" | FLOOR | * | 150 | - | - | - | - | - | - | 8 |
| "GC-3" | WALL "B" | * | 15 | - | - | - | - | - | - | 8 |

GRAPHIC SCALES:

0 1' 2' 4' 8' 12' 16'

3/16"=1'-0"

| REVISION NO. | DATE | REVISIONS | BY |
|---|---|---|---|

ARTHER R. DAR
LICENSED PROFESSIONAL ENGINEER
No. 7808-S
HAWAII U.S.A.

Exp. Date: 4-30-20

THIS WORK WAS PREPARED BY ME OR UNDER MY SUPERVISION AND CONSTRUCTION OF THIS PROJECT WILL BE UNDER MY OBSERVATION

DEPARTMENT OF HAWAIIAN HOMELAND

NANAKULI FLOOD CONTROL
CHANNEL IMPROVEMENTS
NANAKULI VALLEY, OAHU HAWAII

CHANNEL SEGMENT 083 REPAIR DETAILS

| | |
|---|---|
| DESIGNED BY: | TTP |
| DRAWN BY: | AK, AP, DL |
| CHECKED BY: | AD |
| SUPV: | |
| DATE: | 03/05/2019 |

HAWAII ENGINEERING GROUP, Inc.
Civil & Structural Engineers
1088 BISHOP STREET #2506
HONOLULU, HI 96813
Tel: 808-533-2092

JOB NO.

SHEET C083
91 OF 225 SHTS

FILE ___ DRAWER ___ ___ FOLDER ___ ___

Plot date: 15-Apr-2020

Full Size Plot

Plot date: 15-Apr-2020
Full Size Plot

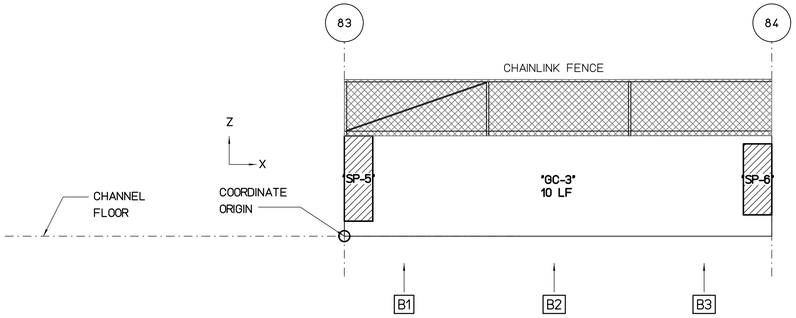


## WALL "B" FLATTEN VIEW

SCALE : 3/16" = 1'-0"

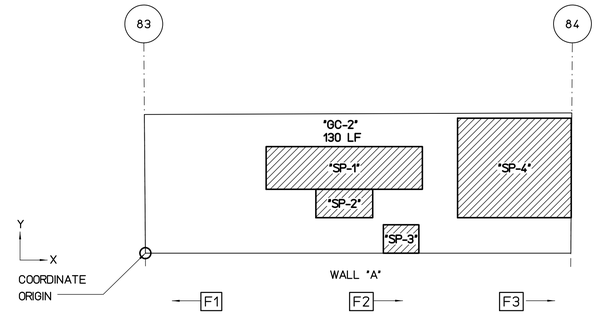


## FLOOR PLAN VIEW

SCALE : 3/16" = 1'-0"

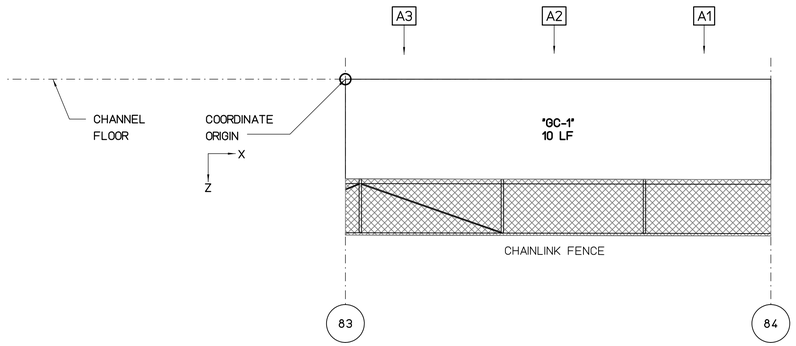


## WALL "A" FLATTEN VIEW

SCALE : 3/16" = 1'-0"

REPAIR LEGEND AND NOTES:

- 2 — CRACK AND SPALL REPAIR TYPES, SEE SHEETS SR201 AND SR202 FOR DETAILS. TYPE [*] INDICATES NO-REPAIR
- (A) — CHAINLINK FENCE REPAIR TYPES, SEE SHEETS SF201 AND SF202 FOR DETAILS
- 1.0 — TOP OF WALL LEANING DISTANCE TOWARD CHANNEL IN INCHES, SEE SHEETS SL101 TO SL207 FOR CONCRETE LINING

PHOTO LEGEND:

- A1 — WALL "A" ELEVATION PHOTO IDENTIFICATION SEE FLATTEN VIEW FOR PHOTO LOCATION
- B1 — WALL "B" ELEVATION PHOTO IDENTIFICATION SEE FLATTEN VIEW FOR PHOTO LOCATION
- F1 — CHANNEL FLOOR PHOTO IDENTIFICATION SEE FLOOR PLAN VIEW FOR PHOTO LOCATION

B1



B2



B3



F1



F2



F3



A1



A2



A3



### SPALL REPAIR CHART

| MARK | LOCATION | REPAIR TYPE | SPALL DIMENSION L | SPALL DIMENSION W | SPALL DIMENSION D | SPALL VOLUME | SPALL CENTER COORDINATE X | SPALL CENTER COORDINATE Y OR Z | RATING |
|---|---|---|---|---|---|---|---|---|---|
| "SP-1" | FLOOR | 3 | 132 | 36 | 2 | 9504 | 14 | 6 | 7 |
| "SP-2" | FLOOR | 3 | 48 | 24 | 2 | 2304 | 14 | 3.5 | 7 |
| "SP-3" | FLOOR | 3 | 30 | 24 | 2 | 1440 | 18 | 1 | 7 |
| "SP-4" | FLOOR | 3 | 96 | 84 | 3 | 24192 | 26 | 6 | 6 |
| "SP-5" | WALL "B" | 3 | 24 | 72 | 3 | 5184 | 1 | 4.1 | 7 |
| "SP-6" | WALL "B" | 3 | 24 | 60 | 3 | 4320 | 29.1 | 4 | 7 |

### CHAINLINK FENCE REPAIR CHART

| MARK | LOCATION | REPAIR TYPE | POSTS | TOP RAIL | BOTTOM WIRE | BRACE | FABRIC |
|---|---|---|---|---|---|---|---|

### CRACK REPAIR CHART

| MARK | LOCATION | REPAIR TYPE | GENERAL CRACKS (LF) | MAJOR CRACKS WIDTH (IN) | MAJOR CRACKS LENGTH (FT) | MAJOR CRACKS START PNT X | MAJOR CRACKS START PNT Y,Z | MAJOR CRACKS END PNT X | MAJOR CRACKS END PNT Y,Z | RATING |
|---|---|---|---|---|---|---|---|---|---|---|
| "GC-1" | WALL "A" | * | 10 | - | - | - | - | - | - | 8 |
| "GC-2" | FLOOR | * | 130 | - | - | - | - | - | - | 8 |
| "GC-3" | WALL "B" | * | 10 | - | - | - | - | - | - | 8 |

GRAPHIC SCALES:

0 1' 2' 4' 8' 12' 16'

3/16"=1'-0"

| REVISION NO. | DATE | REVISIONS | BY |
|---|---|---|---|

ATHER R. DAR
LICENSED PROFESSIONAL ENGINEER
No. 7808-S
HAWAII U.S.A.
Exp. Date: 4-30-20

THIS WORK WAS PREPARED BY ME OR UNDER MY SUPERVISION AND CONSTRUCTION OF THIS PROJECT WILL BE UNDER MY OBSERVATION

DEPARTMENT OF HAWAIIAN HOMELAND

# NANAKULI FLOOD CONTROL CHANNEL IMPROVEMENTS NANAKULI VALLEY, OAHU HAWAII

## CHANNEL SEGMENT 084 REPAIR DETAILS

| | |
|---|---|
| DESIGNED BY: | TTP |
| DRAWN BY: | AK, AP, DL |
| CHECKED BY: | AD |
| SUPV: | |
| DATE: | 03/05/2019 |

HAWAII ENGINEERING GROUP, Inc.
Civil & Structural Engineers
1088 BISHOP STREET #2506
HONOLULU, HI 96813
Tel: 808-533-2092

JOB NO.

SHEET C084
92 OF 225 SHTS

FILE ___ DRAWER ___ ___ FOLDER ___ ___

Plot date: 15-Apr-2020
Full Size Plot

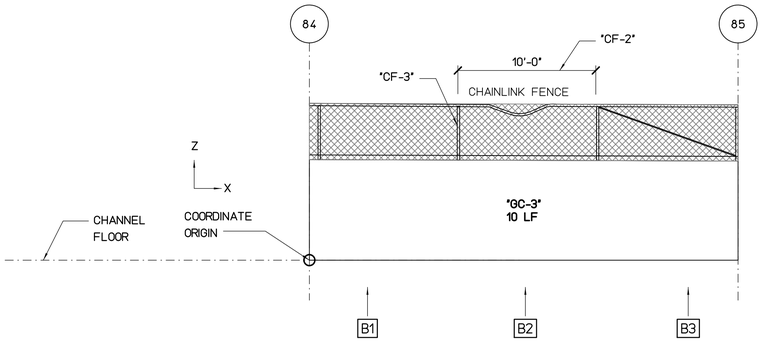


## WALL "B" FLATTEN VIEW

SCALE : 3/16" = 1'-0"

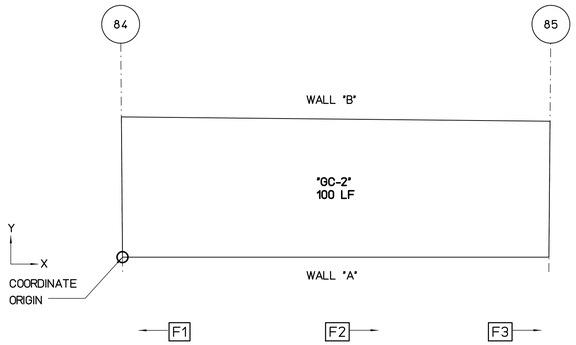


## FLOOR PLAN VIEW

SCALE : 3/16" = 1'-0"

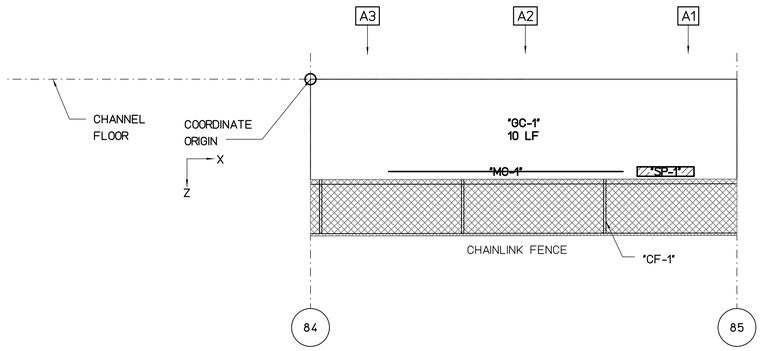


## WALL "A" FLATTEN VIEW

SCALE : 3/16" = 1'-0"

REPAIR LEGEND AND NOTES:

- [2] CRACK AND SPALL REPAIR TYPES, SEE SHEETS SR201 AND SR202 FOR DETAILS. TYPE [*] INDICATES NO-REPAIR
- (A) CHAINLINK FENCE REPAIR TYPES, SEE SHEETS SF201 AND SF202 FOR DETAILS
- [1.0] TOP OF WALL LEANING DISTANCE TOWARD CHANNEL IN INCHES, SEE SHEETS SL101 TO SL207 FOR CONCRETE LINING

PHOTO LEGEND:

- [A1] WALL "A" ELEVATION PHOTO IDENTIFICATION SEE FLATTEN VIEW FOR PHOTO LOCATION
- [B1] WALL "B" ELEVATION PHOTO IDENTIFICATION SEE FLATTEN VIEW FOR PHOTO LOCATION
- [F1] CHANNEL FLOOR PHOTO IDENTIFICATION SEE FLOOR PLAN VIEW FOR PHOTO LOCATION

B1



B2



B3



F1



F2



F3



A1



A2



A3



### SPALL REPAIR CHART

| MARK | LOCATION | REPAIR TYPE | SPALL DIMENSION | | | SPALL VOLUME | SPALL CENTER COORDINATE | | RATING |
|---|---|---|---|---|---|---|---|---|---|
| | | | L | W | D | | X | Y OR Z | |
| "SP-1" | WALL "A" | [3] | 48 | 8 | 2 | 768 | 25 | 6.5 | 7 |

### CHAINLINK FENCE REPAIR CHART

| MARK | LOCATION | REPAIR TYPE | POSTS | TOP RAIL | BOTTOM WIRE | BRACE | FABRIC |
|---|---|---|---|---|---|---|---|
| "CF-1" | WALL "A" | (A) | BENT 1 | - | - | - | - |
| "CF-2" | WALL "B" | (C) | - | BENT 10' | - | - | - |
| "CF-3" | WALL "B" | (A) | BENT 1 | - | - | - | - |

### CRACK REPAIR CHART

| MARK | LOCATION | REPAIR TYPE | GENERAL CRACKS (LF) | MAJOR CRACKS | | | | | | RATING |
|---|---|---|---|---|---|---|---|---|---|---|
| | | | | WIDTH (IN) | LENGTH (FT) | START PNT X | START PNT Y,Z | END PNT X | END PNT Y,Z | |
| "MC-1" | WALL "A" | [1] | - | 0.19 | 16.5 | 5.5 | 6.5 | 22 | 6.5 | 7 |
| "GC-1" | WALL "A" | [*] | 10 | - | - | - | - | - | - | 8 |
| "GC-2" | FLOOR | [*] | 100 | - | - | - | - | - | - | 8 |
| "GC-3" | WALL "B" | [*] | 10 | - | - | - | - | - | - | 8 |

GRAPHIC SCALES:

0 1' 2' 4' 8' 12' 16'

3/16"=1'-0"

| REVISION NO. | DATE | REVISIONS | BY |
|---|---|---|---|

ATHER R. DAR
LICENSED PROFESSIONAL ENGINEER
No. 7808-S
HAWAII U.S.A.

Exp. Date: 4-30-20

THIS WORK WAS PREPARED BY ME OR UNDER MY SUPERVISION AND CONSTRUCTION OF THIS PROJECT WILL BE UNDER MY OBSERVATION

DEPARTMENT OF HAWAIIAN HOMELAND

# NANAKULI FLOOD CONTROL CHANNEL IMPROVEMENTS NANAKULI VALLEY, OAHU HAWAII

## CHANNEL SEGMENT [085] REPAIR DETAILS

| | |
|---|---|
| DESIGNED BY: | TTP |
| DRAWN BY: | AK, AP, DL |
| CHECKED BY: | AD |
| SUPV: | |
| DATE: | 03/05/2019 |

HAWAII ENGINEERING GROUP, Inc.
Civil & Structural Engineers
1088 BISHOP STREET #2506
HONOLULU, HI 96813
Tel: 808-533-2092

JOB NO.

SHEET C085
93 OF 225 SHTS

FILE ___ DRAWER ___ ___ FOLDER ___ ___

Plot date: 15-Apr-2020
Full Size Plot

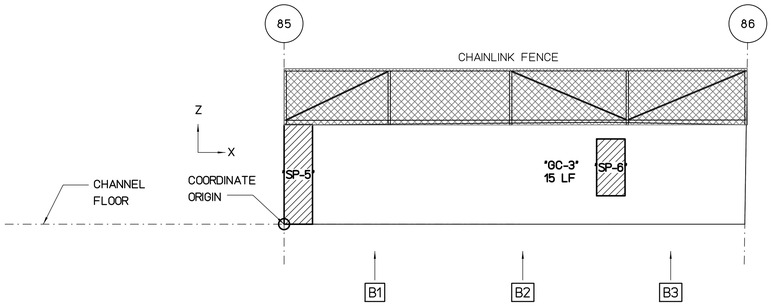


## WALL "B" FLATTEN VIEW

SCALE : 3/16" = 1'-0"

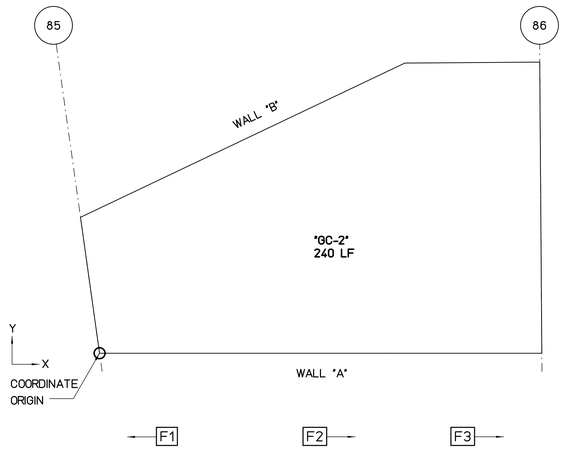


## FLOOR PLAN VIEW

SCALE : 3/16" = 1'-0"

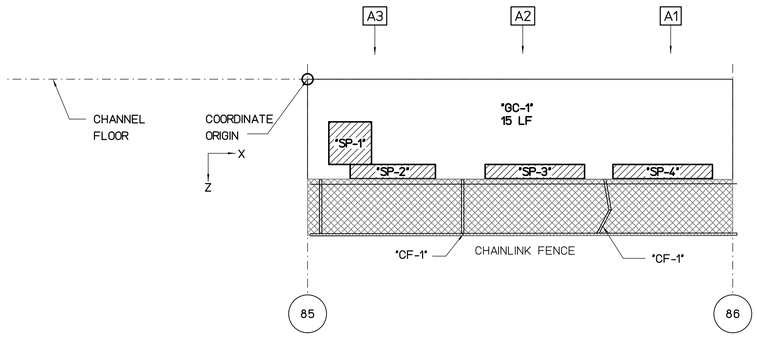


## WALL "A" FLATTEN VIEW

SCALE : 3/16" = 1'-0"

REPAIR LEGEND AND NOTES:

- [2] CRACK AND SPALL REPAIR TYPES, SEE SHEETS SR201 AND SR202 FOR DETAILS. TYPE [*] INDICATES NO-REPAIR
- (A) CHAINLINK FENCE REPAIR TYPES, SEE SHEETS SF201 AND SF202 FOR DETAILS
- 1.0 TOP OF WALL LEANING DISTANCE TOWARD CHANNEL IN INCHES, SEE SHEETS SL101 TO SL207 FOR CONCRETE LINING

PHOTO LEGEND:

- [A1] WALL "A" ELEVATION PHOTO IDENTIFICATION SEE FLATTEN VIEW FOR PHOTO LOCATION
- [B1] WALL "B" ELEVATION PHOTO IDENTIFICATION SEE FLATTEN VIEW FOR PHOTO LOCATION
- [F1] CHANNEL FLOOR PHOTO IDENTIFICATION SEE FLOOR PLAN VIEW FOR PHOTO LOCATION

B1



B2



B3



F1



F2



F3



A1



A2



A3



### SPALL REPAIR CHART

| MARK | LOCATION | REPAIR TYPE | SPALL DIMENSION L | SPALL DIMENSION W | SPALL DIMENSION D | SPALL VOLUME | SPALL CENTER COORDINATE X | SPALL CENTER COORDINATE Y OR Z | RATING |
|---|---|---|---|---|---|---|---|---|---|
| "SP-1" | WALL "A" | [3] | 36 | 36 | 2 | 2592 | 3 | 4.5 | 7 |
| "SP-2" | WALL "A" | [3] | 72 | 36 | 2 | 1728 | 6 | 6.5 | 7 |
| "SP-3" | WALL "A" | [3] | 84 | 12 | 2 | 2016 | 16 | 6.5 | 7 |
| "SP-4" | WALL "A" | [3] | 84 | 12 | 2 | 2016 | 25 | 6.5 | 7 |
| "SP-5" | WALL "B" | [3] | 24 | 84 | 4 | 8064 | 1 | 3.5 | 7 |
| "SP-6" | WALL "B" | [3] | 24 | 48 | 2 | 2304 | 23 | 4 | 7 |

### CHAINLINK FENCE REPAIR CHART

| MARK | LOCATION | REPAIR TYPE | POSTS | TOP RAIL | BOTTOM WIRE | BRACE | FABRIC |
|---|---|---|---|---|---|---|---|
| "CF-1" | WALL "A" | (A) | BENT 2 | - | - | - | - |

### CRACK REPAIR CHART

| MARK | LOCATION | REPAIR TYPE | GENERAL CRACKS (LF) | MAJOR CRACKS WIDTH (IN) | MAJOR CRACKS LENGTH (FT) | MAJOR CRACKS START PNT X | MAJOR CRACKS START PNT Y,Z | MAJOR CRACKS END PNT X | MAJOR CRACKS END PNT Y,Z | RATING |
|---|---|---|---|---|---|---|---|---|---|---|
| "GC-1" | WALL "A" | [*] | 15 | - | - | - | - | - | - | 8 |
| "GC-2" | FLOOR | [*] | 240 | - | - | - | - | - | - | 8 |
| "GC-3" | WALL "B" | [*] | 15 | - | - | - | - | - | - | 9 |

GRAPHIC SCALES:

0 1' 2' 4' 8' 12' 16'

3/16"=1'-0"

| REVISION NO. | DATE | REVISIONS | BY |
|---|---|---|---|

ATHER R. DAR
LICENSED PROFESSIONAL ENGINEER
No. 7808-S
HAWAII U.S.A.
Exp. Date: 4-30-20

THIS WORK WAS PREPARED BY ME OR UNDER MY SUPERVISION AND CONSTRUCTION OF THIS PROJECT WILL BE UNDER MY OBSERVATION

DEPARTMENT OF HAWAIIAN HOMELAND

# NANAKULI FLOOD CONTROL CHANNEL IMPROVEMENTS NANAKULI VALLEY, OAHU HAWAII

## CHANNEL SEGMENT [086] REPAIR DETAILS

| | |
|---|---|
| DESIGNED BY: | TTP |
| DRAWN BY: | AK, AP, DL |
| CHECKED BY: | AD |
| SUPV: | |
| DATE: | 03/05/2019 |

HAWAII ENGINEERING GROUP, Inc.
Civil & Structural Engineers
1088 BISHOP STREET #2506
HONOLULU, HI 96813
Tel: 808-533-2092

JOB NO.

SHEET C086
94 OF 225 SHTS

FILE ___ DRAWER ___ ___ FOLDER ___ ___

Plot date: 15-Apr-2020
Full Size Plot

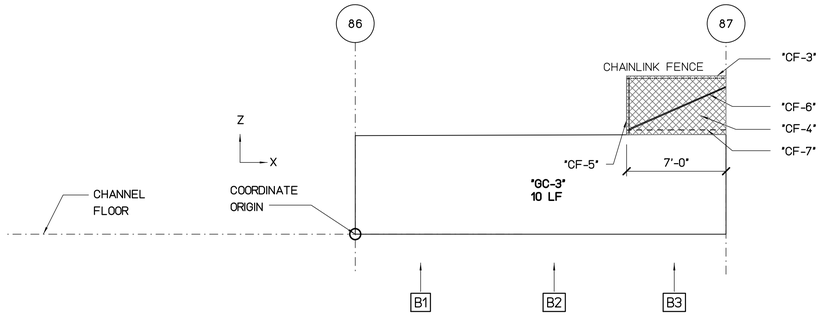


## WALL "B" FLATTEN VIEW

SCALE : 3/16" = 1'-0"

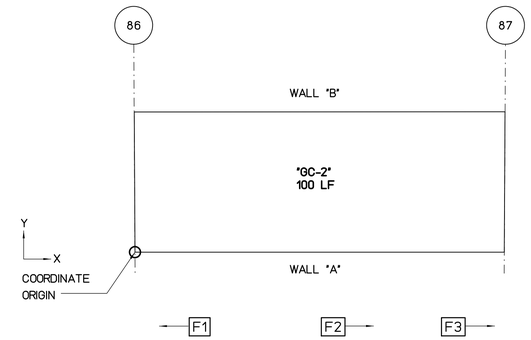


## FLOOR PLAN VIEW

SCALE : 3/16" = 1'-0"

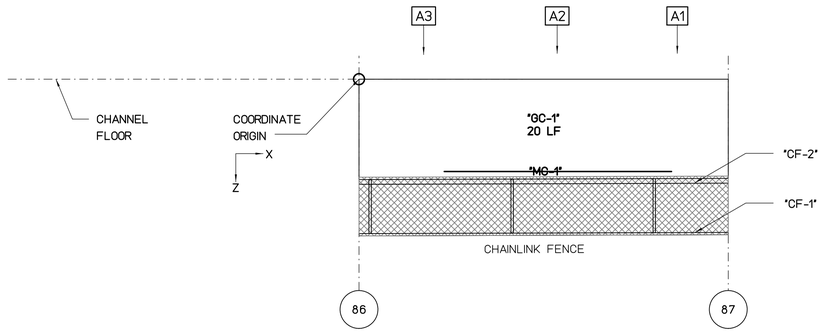


## WALL "A" FLATTEN VIEW

SCALE : 3/16" = 1'-0"

REPAIR LEGEND AND NOTES:

- [2] CRACK AND SPALL REPAIR TYPES, SEE SHEETS SR201 AND SR202 FOR DETAILS. TYPE [*] INDICATES NO-REPAIR
- (A) CHAINLINK FENCE REPAIR TYPES, SEE SHEETS SF201 AND SF202 FOR DETAILS
- 1.0 TOP OF WALL LEANING DISTANCE TOWARD CHANNEL IN INCHES, SEE SHEETS SL101 TO SL207 FOR CONCRETE LINING

PHOTO LEGEND:

- [A1] WALL "A" ELEVATION PHOTO IDENTIFICATION SEE FLATTEN VIEW FOR PHOTO LOCATION
- [B1] WALL "B" ELEVATION PHOTO IDENTIFICATION SEE FLATTEN VIEW FOR PHOTO LOCATION
- [F1] CHANNEL FLOOR PHOTO IDENTIFICATION SEE FLOOR PLAN VIEW FOR PHOTO LOCATION

B1



B2



B3



F1



F2



F3



A1



A2



A3



### SPALL REPAIR CHART

| MARK | LOCATION | REPAIR TYPE | SPALL DIMENSION L | SPALL DIMENSION W | SPALL DIMENSION D | SPALL VOLUME | SPALL CENTER COORDINATE X | SPALL CENTER COORDINATE Y OR Z | RATING |
|---|---|---|---|---|---|---|---|---|---|
| "SP-1" | WALL "B" | [3] | 12 | 60 | 2 | 1440 | 0.5 | 4 | 7 |

### CHAINLINK FENCE REPAIR CHART

| MARK | LOCATION | REPAIR TYPE | POSTS | TOP RAIL | BOTTOM WIRE | BRACE | FABRIC |
|---|---|---|---|---|---|---|---|
| "CF-1" | WALL "A" | (C) | - | DAMAGED 26' | - | - | - |
| "CF-2" | WALL "A" | (D) | - | - | DAMAGED 26' | - | - |
| "CF-3" | WALL "B" | (C) | - | MISSING 7' | - | - | - |
| "CF-4" | WALL "B" | (E) | - | - | - | - | DAMAGED 7'x4' |
| "CF-5" | WALL "B" | (A) | DAMAGED 1 | - | - | - | - |
| "CF-6" | WALL "B" | (B) | - | - | - | DAMAGED 1 | - |
| "CF-7" | WALL "B" | (D) | - | - | MISSING 7' | - | - |

### CRACK REPAIR CHART

| MARK | LOCATION | REPAIR TYPE | GENERAL CRACKS (LF) | MAJOR CRACKS WIDTH (IN) | MAJOR CRACKS LENGTH (FT) | MAJOR CRACKS START PNT X | MAJOR CRACKS START PNT Y,Z | MAJOR CRACKS END PNT X | MAJOR CRACKS END PNT Y,Z | RATING |
|---|---|---|---|---|---|---|---|---|---|---|
| "MC-1" | WALL "A" | [1] | - | 0.19 | 16 | 6 | 6.5 | 22 | 6.5 | 7 |
| "GC-1" | WALL "A" | [*] | 20 | - | - | - | - | - | - | 8 |
| "GC-2" | FLOOR | [*] | 100 | - | - | - | - | - | - | 8 |
| "GC-3" | WALL "B" | [*] | 10 | - | - | - | - | - | - | 8 |

GRAPHIC SCALES:

0 1' 2' 4' 8' 12' 16'

3/16"=1'-0"

| REVISION NO. | DATE | REVISIONS | BY |
|---|---|---|---|

ATHER R. DAR
LICENSED PROFESSIONAL ENGINEER
No. 7808-S
HAWAII U.S.A.
Exp. Date: 4-30-20

THIS WORK WAS PREPARED BY ME OR UNDER MY SUPERVISION AND CONSTRUCTION OF THIS PROJECT WILL BE UNDER MY OBSERVATION

DEPARTMENT OF HAWAIIAN HOMELAND

# NANAKULI FLOOD CONTROL CHANNEL IMPROVEMENTS NANAKULI VALLEY, OAHU HAWAII

## CHANNEL SEGMENT [087] REPAIR DETAILS

| | |
|---|---|
| DESIGNED BY: | TTP |
| DRAWN BY: | AK, AP, DL |
| CHECKED BY: | AD |
| SUPV: | |
| DATE: | 03/05/2019 |

HAWAII ENGINEERING GROUP, Inc.
Civil & Structural Engineers
1088 BISHOP STREET #2506
HONOLULU, HI 96813
Tel: 808-533-2092

JOB NO.

SHEET C087
95 OF 225 SHTS

FILE ___ DRAWER ___ ___ FOLDER ___ ___

Plot date: 15-Apr-2020
Full Size Plot

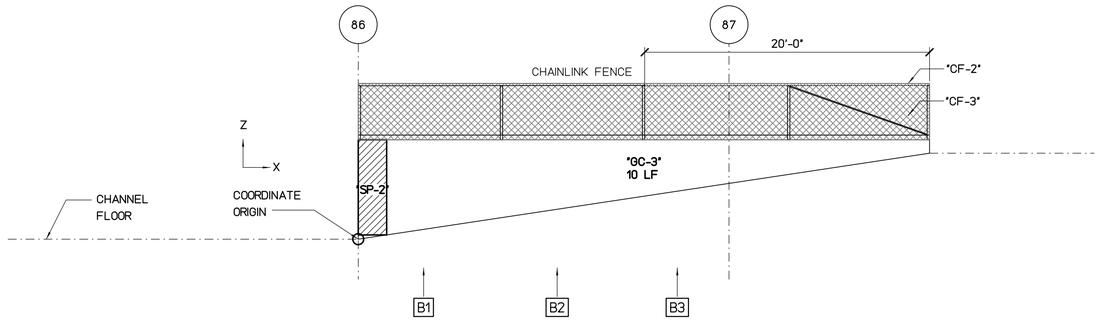


## WALL "B" FLATTEN VIEW

SCALE : 3/16" = 1'-0"

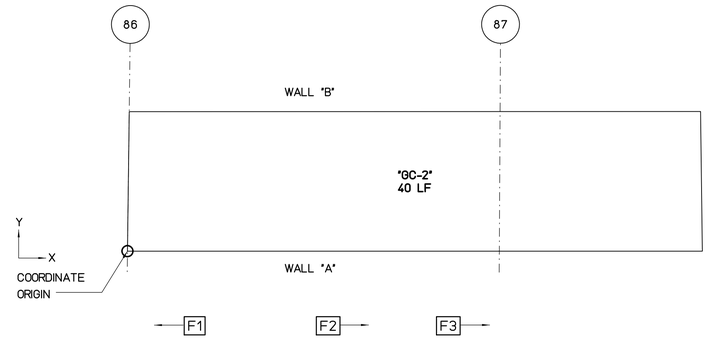


## FLOOR PLAN VIEW

SCALE : 3/16" = 1'-0"

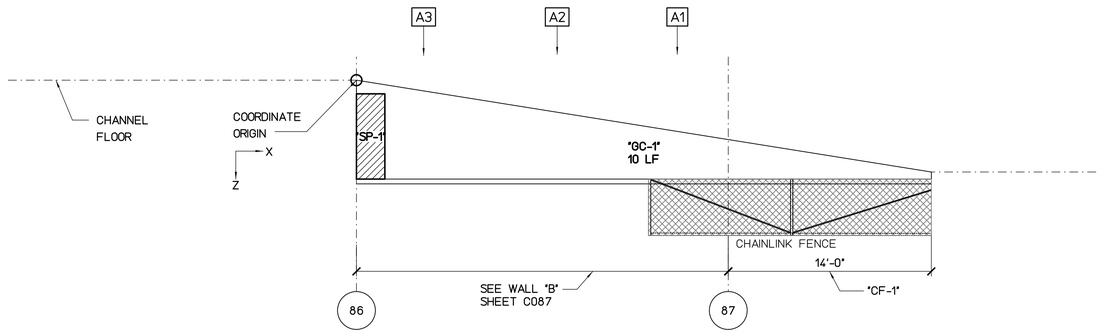


## WALL "A" FLATTEN VIEW

SCALE : 3/16" = 1'-0"

NOTE:

FOR CATTLE GATE PLAN AND DETAILS, SEE SHEET SF203.

REPAIR LEGEND AND NOTES:

- [2] CRACK AND SPALL REPAIR TYPES, SEE SHEETS SR201 AND SR202 FOR DETAILS. TYPE [*] INDICATES NO-REPAIR
- (A) CHAINLINK FENCE REPAIR TYPES, SEE SHEETS SF201 AND SF202 FOR DETAILS
- [1.0] TOP OF WALL LEANING DISTANCE TOWARD CHANNEL IN INCHES, SEE SHEETS SL101 TO SL207 FOR CONCRETE LINING

PHOTO LEGEND:

- [A1] WALL "A" ELEVATION PHOTO IDENTIFICATION SEE FLATTEN VIEW FOR PHOTO LOCATION
- [B1] WALL "B" ELEVATION PHOTO IDENTIFICATION SEE FLATTEN VIEW FOR PHOTO LOCATION
- [F1] CHANNEL FLOOR PHOTO IDENTIFICATION SEE FLOOR PLAN VIEW FOR PHOTO LOCATION

B1



B2



B3



F1



F2



F3



A1



A2



A3



### SPALL REPAIR CHART

| MARK | LOCATION | REPAIR TYPE | SPALL DIMENSION L | SPALL DIMENSION W | SPALL DIMENSION D | SPALL VOLUME | SPALL CENTER COORDINATE X | SPALL CENTER COORDINATE Y OR Z | RATING |
|---|---|---|---|---|---|---|---|---|---|
| "SP-1" | WALL "A" | [3] | 24 | 72 | 3 | 5184 | 1 | 4 | 7 |
| "SP-2" | WALL "B" | [3] | 24 | 80 | 2 | 4032 | 1 | 3.5 | 7 |

### CHAINLINK FENCE REPAIR CHART

| MARK | LOCATION | REPAIR TYPE | POSTS | TOP RAIL | BOTTOM WIRE | BRACE | FABRIC |
|---|---|---|---|---|---|---|---|
| "CF-1" | WALL "A" | (C) | - | MISSING 14' | - | - | - |
| "CF-2" | WALL "B" | (C) | - | MISSING 20' | - | - | - |
| "CF-3" | WALL "B" | (E) | - | - | - | - | DAMAGED 20'x4' |

### CRACK REPAIR CHART

| MARK | LOCATION | REPAIR TYPE | GENERAL CRACKS (LF) | MAJOR CRACKS WIDTH (IN) | MAJOR CRACKS LENGTH (FT) | START PNT X | START PNT Y,Z | END PNT X | END PNT Y,Z | RATING |
|---|---|---|---|---|---|---|---|---|---|---|
| "GC-1" | WALL "A" | [*] | 10 | - | - | - | - | - | - | 9 |
| "GC-2" | FLOOR | [*] | 40 | - | - | - | - | - | - | 8 |
| "GC-3" | WALL "B" | [*] | 10 | - | - | - | - | - | - | 9 |

GRAPHIC SCALES:

0 1' 2' 4' 8' 12' 16'

3/16"=1'-0"

| REVISION NO. | DATE | REVISIONS | BY |
|---|---|---|---|
| | | | |

ARTHUR R. DARLING — LICENSED PROFESSIONAL ENGINEER — No. 7808-S — HAWAII U.S.A.

Exp. Date: 4-30-20

THIS WORK WAS PREPARED BY ME OR UNDER MY SUPERVISION AND CONSTRUCTION OF THIS PROJECT WILL BE UNDER MY OBSERVATION

DEPARTMENT OF HAWAIIAN HOMELAND

# NANAKULI FLOOD CONTROL CHANNEL IMPROVEMENTS NANAKULI VALLEY, OAHU HAWAII

## CHANNEL SEGMENT [087R] REPAIR DETAILS

| | |
|---|---|
| DESIGNED BY: | TTP |
| DRAWN BY: | AK, AP, DL |
| CHECKED BY: | AD |
| SUPV: | |
| DATE: | 03/05/2019 |

HAWAII ENGINEERING GROUP, Inc.
Civil & Structural Engineers
1088 BISHOP STREET #2506
HONOLULU, HI 96813
Tel: 808-533-2092

JOB NO.

SHEET C087R

96 OF 225 SHTS

FILE ___ DRAWER ___ ___ FOLDER ___ ___

Plot date: 15-Apr-2020
Full Size Plot

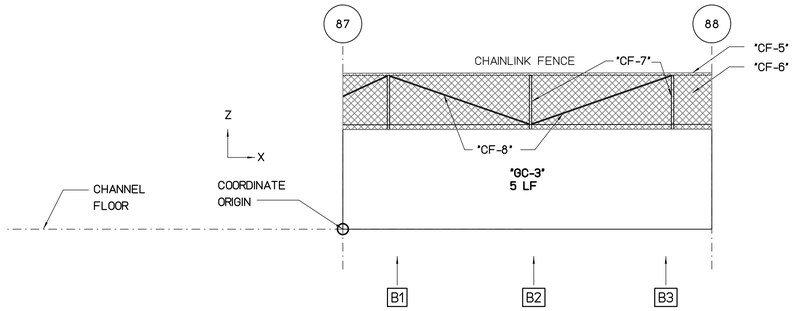


## WALL "B" FLATTEN VIEW

SCALE : 3/16" = 1'-0"

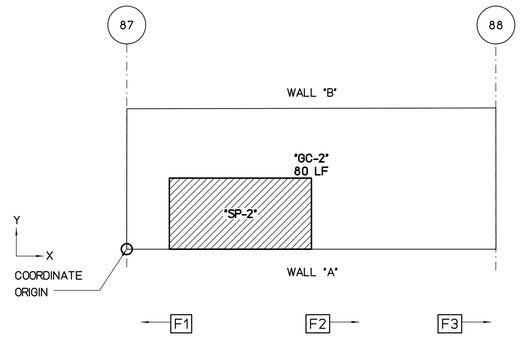


## FLOOR PLAN VIEW

SCALE : 3/16" = 1'-0"

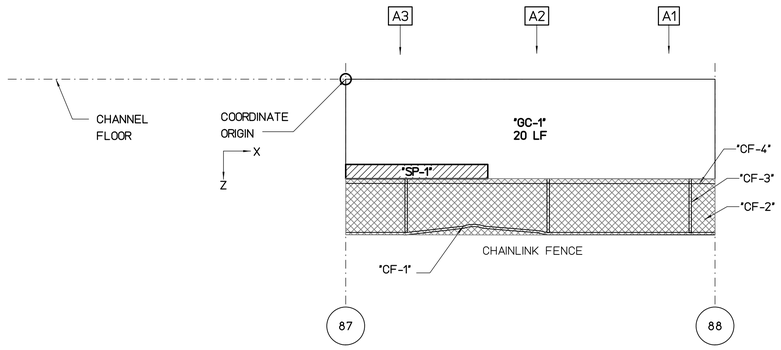


## WALL "A" FLATTEN VIEW

SCALE : 3/16" = 1'-0"

REPAIR LEGEND AND NOTES:

- [2] CRACK AND SPALL REPAIR TYPES, SEE SHEETS SR201 AND SR202 FOR DETAILS. TYPE [*] INDICATES NO-REPAIR
- (A) CHAINLINK FENCE REPAIR TYPES, SEE SHEETS SF201 AND SF202 FOR DETAILS
- 1.0 TOP OF WALL LEANING DISTANCE TOWARD CHANNEL IN INCHES, SEE SHEETS SL101 TO SL207 FOR CONCRETE LINING

PHOTO LEGEND:

- [A1] WALL "A" ELEVATION PHOTO IDENTIFICATION SEE FLATTEN VIEW FOR PHOTO LOCATION
- [B1] WALL "B" ELEVATION PHOTO IDENTIFICATION SEE FLATTEN VIEW FOR PHOTO LOCATION
- [F1] CHANNEL FLOOR PHOTO IDENTIFICATION SEE FLOOR PLAN VIEW FOR PHOTO LOCATION

B1



B2



B3



F1



F2



F3



A1



A2



A3



### SPALL REPAIR CHART

| MARK | LOCATION | REPAIR TYPE | SPALL DIMENSION L | SPALL DIMENSION W | SPALL DIMENSION D | SPALL VOLUME | SPALL CENTER COORDINATE X | SPALL CENTER COORDINATE Y OR Z | RATING |
|---|---|---|---|---|---|---|---|---|---|
| "SP-1" | WALL "A" | [3] | 120 | 12 | 2 | 2880 | 5 | 6.5 | 7 |
| "SP-2" | FLOOR | [3] | 120 | 60 | 3 | 21600 | 8 | 2.5 | 7 |

### CHAINLINK FENCE REPAIR CHART

| MARK | LOCATION | REPAIR TYPE | POSTS | TOP RAIL | BOTTOM WIRE | BRACE | FABRIC |
|---|---|---|---|---|---|---|---|
| "CF-1" | WALL "A" | (C) | - | BENT 26' | - | - | - |
| "CF-2" | WALL "A" | (E) | - | - | - | - | DAMAGED 26'x4' |
| "CF-3" | WALL "A" | (A) | BENT 1 | - | - | - | - |
| "CF-4" | WALL "A" | (D) | - | - | DAMAGED 26' | - | - |
| "CF-5" | WALL "B" | (C) | - | MISSING 26' | - | - | - |
| "CF-6" | WALL "B" | (E) | - | - | - | - | DAMAGED 26'x4' |
| "CF-7" | WALL "B" | (A) | DAMAGED 2 | - | - | - | - |
| "CF-8" | WALL "B" | (B) | - | - | - | DAMAGED 2 | - |

### CRACK REPAIR CHART

| MARK | LOCATION | REPAIR TYPE | GENERAL CRACKS (LF) | MAJOR CRACKS WIDTH (IN) | MAJOR CRACKS LENGTH (FT) | MAJOR CRACKS START PNT X | MAJOR CRACKS START PNT Y,Z | MAJOR CRACKS END PNT X | MAJOR CRACKS END PNT Y,Z | RATING |
|---|---|---|---|---|---|---|---|---|---|---|
| "GC-1" | WALL "A" | [*] | 20 | - | - | - | - | - | - | 8 |
| "GC-2" | FLOOR | [*] | 80 | - | - | - | - | - | - | 8 |
| "GC-3" | WALL "B" | [*] | 5 | - | - | - | - | - | - | 9 |

GRAPHIC SCALES:

0 1' 2' 4' 8' 12' 16'

3/16"=1'-0"

| REVISION NO. | DATE | REVISIONS | BY |
|---|---|---|---|

ATHER R. DAR
LICENSED PROFESSIONAL ENGINEER
No. 7808-S
HAWAII U.S.A.

Exp. Date: 4-30-20

THIS WORK WAS PREPARED BY ME OR UNDER MY SUPERVISION AND CONSTRUCTION OF THIS PROJECT WILL BE UNDER MY OBSERVATION

DEPARTMENT OF HAWAIIAN HOMELAND

# NANAKULI FLOOD CONTROL CHANNEL IMPROVEMENTS NANAKULI VALLEY, OAHU HAWAII

## CHANNEL SEGMENT [088] REPAIR DETAILS

| | |
|---|---|
| DESIGNED BY: | TTP |
| DRAWN BY: | AK, AP, DL |
| CHECKED BY: | AD |
| SUPV: | |
| DATE: | 03/05/2019 |

HAWAII ENGINEERING GROUP, Inc.
Civil & Structural Engineers
1088 BISHOP STREET #2506
HONOLULU, HI 96813
Tel: 808-533-2092

JOB NO.

SHEET C088
97 OF 225 SHTS

FILE ___ DRAWER ___ ___ FOLDER ___ ___

Plot date: 15-Apr-2020
Full Size Plot

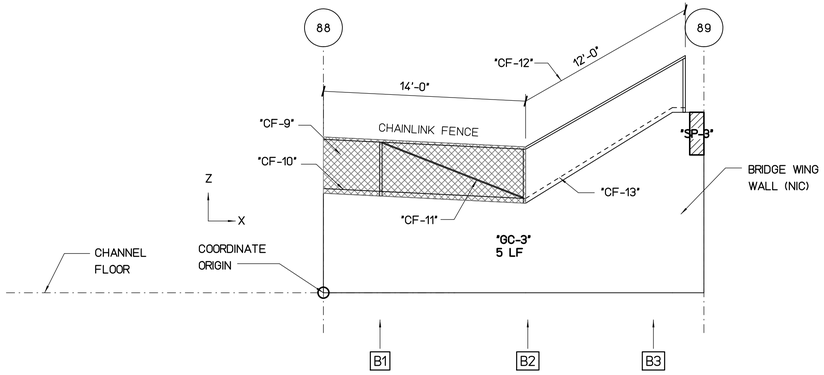


## WALL "B" FLATTEN VIEW

SCALE : 3/16" = 1'-0"

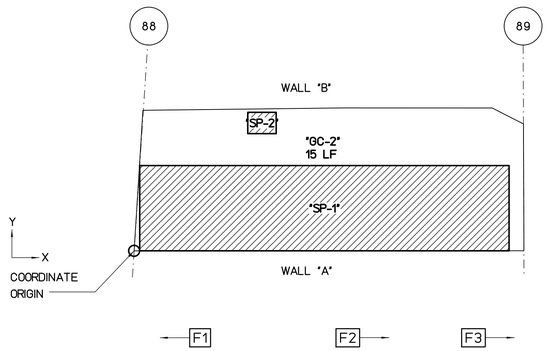


## FLOOR PLAN VIEW

SCALE : 3/16" = 1'-0"

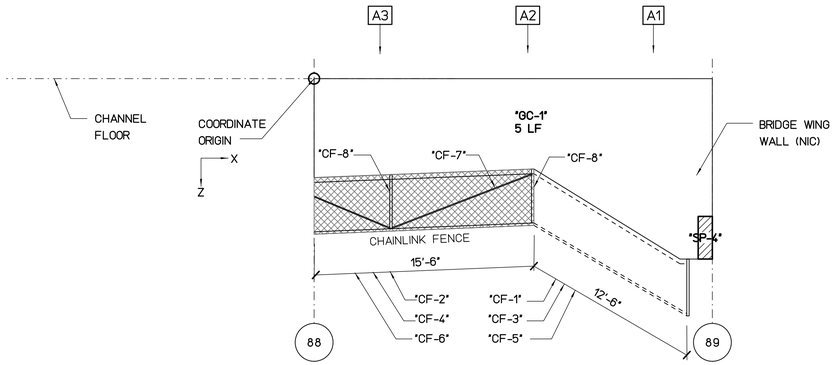


## WALL "A" FLATTEN VIEW

SCALE : 3/16" = 1'-0"

REPAIR LEGEND AND NOTES:

- [2] CRACK AND SPALL REPAIR TYPES, SEE SHEETS SR201 AND SR202 FOR DETAILS. TYPE [*] INDICATES NO-REPAIR
- (A) CHAINLINK FENCE REPAIR TYPES, SEE SHEETS SF201 AND SF202 FOR DETAILS
- 1.0 TOP OF WALL LEANING DISTANCE TOWARD CHANNEL IN INCHES, SEE SHEETS SL101 TO SL207 FOR CONCRETE LINING

PHOTO LEGEND:

- A1 WALL "A" ELEVATION PHOTO IDENTIFICATION SEE FLATTEN VIEW FOR PHOTO LOCATION
- B1 WALL "B" ELEVATION PHOTO IDENTIFICATION SEE FLATTEN VIEW FOR PHOTO LOCATION
- F1 CHANNEL FLOOR PHOTO IDENTIFICATION SEE FLOOR PLAN VIEW FOR PHOTO LOCATION

B1



B2



B3



F1



F2



F3



A1



A2



A3



### SPALL REPAIR CHART

| MARK | LOCATION | REPAIR TYPE | SPALL DIMENSION L | W | D | SPALL VOLUME | SPALL CENTER COORDINATE X | Y OR Z | RATING |
|---|---|---|---|---|---|---|---|---|---|
| "SP-1" | FLOOR | 3 | 312 | 72 | 2 | 44928 | 13.4 | 3 | 7 |
| "SP-2" | FLOOR | 3 | 24 | 18 | 2 | 864 | 9 | 9 | 7 |
| "SP-3" | WALL "B" | 3 | 12 | 36 | 2 | 864 | 26.3 | 11.2 | 7 |
| "SP-4" | WALL "A" | 3 | 12 | 36 | 2 | 864 | 27.5 | 11.2 | 7 |

### CHAINLINK FENCE REPAIR CHART

| MARK | LOCATION | REPAIR TYPE | POSTS | TOP RAIL | BOTTOM WIRE | BRACE | FABRIC |
|---|---|---|---|---|---|---|---|
| "CF-1" | WALL "A" | C | - | MISSING 12'-6" | - | - | - |
| "CF-2" | WALL "A" | C | - | BENT 15'-6" | - | - | - |
| "CF-3" | WALL "A" | E | | | | | DAMAGED 12'-6"x4' |
| "CF-4" | WALL "A" | E | - | - | - | - | DAMAGED 15'-6"x4' |
| "CF-5" | WALL "A" | D | - | - | DAMAGED 12'-6" | - | - |
| "CF-6" | WALL "A" | D | - | - | MISSING 15'-6" | - | - |
| "CF-7" | WALL "A" | B | - | - | - | DAMAGED 1 | - |
| "CF-8" | WALL "A" | A | DAMAGED 2 | - | - | - | - |
| "CF-9" | WALL "B" | E | - | - | - | - | DAMAGED 14'x4' |
| "CF-10" | WALL "B" | D | - | - | DAMAGED 14' | - | - |
| "CF-11" | WALL "B" | B | - | - | - | DAMAGED 1 | - |
| "CF-12" | WALL "B" | E | - | - | - | - | MISSING 12'x4' |
| "CF-13" | WALL "B" | D | - | - | MISSING 12' | - | - |

### CRACK REPAIR CHART

| MARK | LOCATION | REPAIR TYPE | GENERAL CRACKS (LF) | MAJOR CRACKS WIDTH (IN) | LENGTH (FT) | START PNT X | START PNT Y,Z | END PNT X | END PNT Y,Z | RATING |
|---|---|---|---|---|---|---|---|---|---|---|
| "GC-1" | WALL "A" | * | 5 | - | - | - | - | - | - | 9 |
| "GC-2" | FLOOR | * | 15 | - | - | - | - | - | - | 8 |
| "GC-3" | WALL "B" | * | 5 | - | - | - | - | - | - | 9 |

GRAPHIC SCALES:

0 1' 2' 4' 8' 12' 16'

3/16"=1'-0"

| REVISION NO. | DATE | REVISIONS | BY |
|---|---|---|---|
| | | | |

ARTHER R. DAR
LICENSED PROFESSIONAL ENGINEER
No. 7808-S
HAWAII U.S.A.

Exp. Date: 4-30-20

THIS WORK WAS PREPARED BY ME OR UNDER MY SUPERVISION AND CONSTRUCTION OF THIS PROJECT WILL BE UNDER MY OBSERVATION

DEPARTMENT OF HAWAIIAN HOMELAND

# NANAKULI FLOOD CONTROL CHANNEL IMPROVEMENTS NANAKULI VALLEY, OAHU HAWAII

## CHANNEL SEGMENT 089 REPAIR DETAILS

| | |
|---|---|
| DESIGNED BY: | TTP |
| DRAWN BY: | AK, AP, DL |
| CHECKED BY: | AD |
| SUPV: | |
| DATE: | 03/05/2019 |

HAWAII ENGINEERING GROUP, Inc.
Civil & Structural Engineers
1088 BISHOP STREET #2506
HONOLULU, HI 96813
Tel: 808-533-2092

JOB NO.

SHEET C089

98 OF 225 SHTS

FILE ___ DRAWER ___ ___ FOLDER ___ ___

Plot date: 15-Apr-2020
Full Size Plot

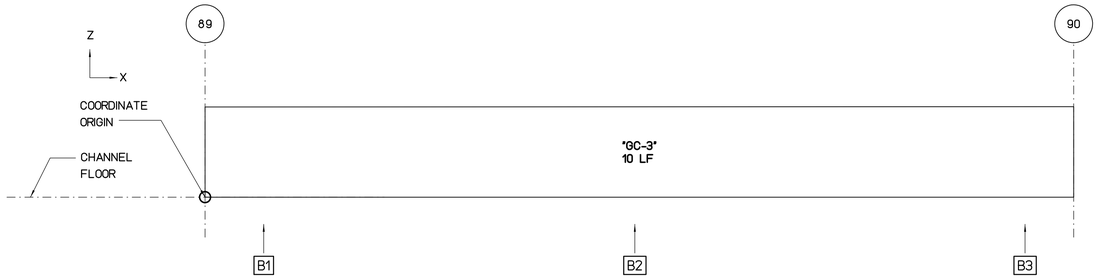


## WALL "B" FLATTEN VIEW (NIC)

SCALE : 3/16" = 1'-0"

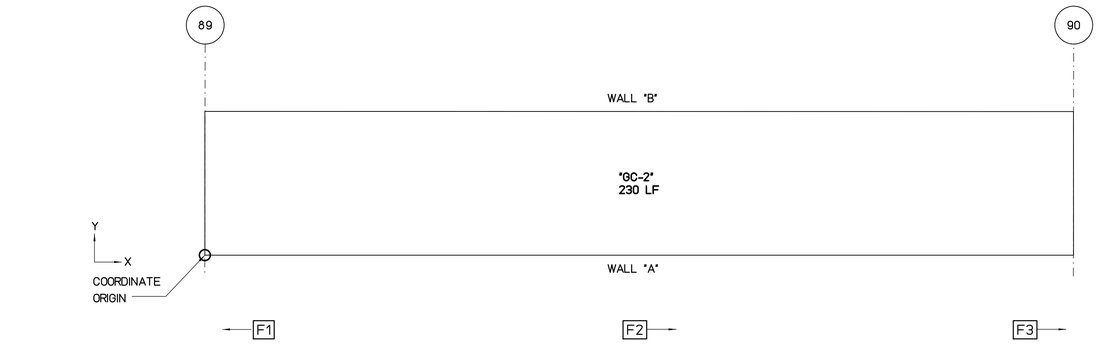


## FLOOR PLAN VIEW

SCALE : 3/16" = 1'-0"

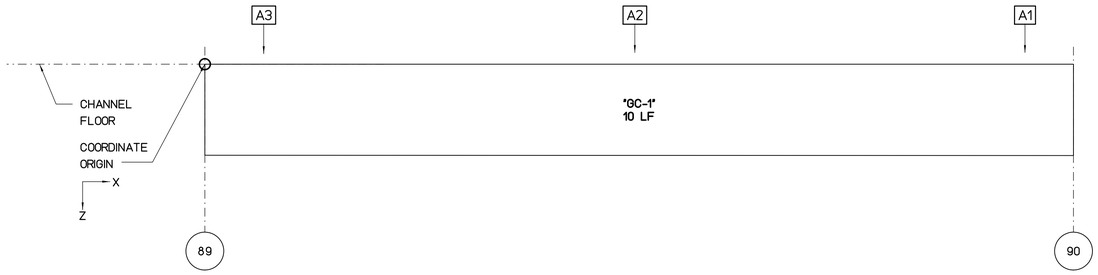


## WALL "A" FLATTEN VIEW (NIC)

SCALE : 3/16" = 1'-0"

REPAIR LEGEND AND NOTES:

- 2 — CRACK AND SPALL REPAIR TYPES, SEE SHEETS SR201 AND SR202 FOR DETAILS. TYPE [*] INDICATES NO-REPAIR
- (A) — CHAINLINK FENCE REPAIR TYPES, SEE SHEETS SF201 AND SF202 FOR DETAILS
- 1.0 — TOP OF WALL LEANING DISTANCE TOWARD CHANNEL IN INCHES, SEE SHEETS SL101 TO SL207 FOR CONCRETE LINING

PHOTO LEGEND:

- A1 — WALL "A" ELEVATION PHOTO IDENTIFICATION SEE FLATTEN VIEW FOR PHOTO LOCATION
- B1 — WALL "B" ELEVATION PHOTO IDENTIFICATION SEE FLATTEN VIEW FOR PHOTO LOCATION
- F1 — CHANNEL FLOOR PHOTO IDENTIFICATION SEE FLOOR PLAN VIEW FOR PHOTO LOCATION

B1



B2



B3



F1

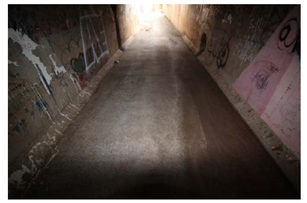

F2



F3



A1



A2



A3



### SPALL REPAIR CHART

| MARK | LOCATION | REPAIR TYPE | SPALL DIMENSION | | | SPALL VOLUME | SPALL CENTER COORDINATE | | RATING |
|---|---|---|---|---|---|---|---|---|---|
| | | | L | W | D | | X | Y OR Z | |
| | | | | | | | | | |
| | | | | | | | | | |
| | | | | | | | | | |
| | | | | | | | | | |
| | | | | | | | | | |
| | | | | | | | | | |
| | | | | | | | | | |
| | | | | | | | | | |

### CHAINLINK FENCE REPAIR CHART

| MARK | LOCATION | REPAIR TYPE | POSTS | TOP RAIL | BOTTOM WIRE | BRACE | FABRIC |
|---|---|---|---|---|---|---|---|
| | | | | | | | |
| | | | | | | | |
| | | | | | | | |
| | | | | | | | |
| | | | | | | | |
| | | | | | | | |
| | | | | | | | |
| | | | | | | | |
| | | | | | | | |

### CRACK REPAIR CHART

| MARK | LOCATION | REPAIR TYPE | GENERAL CRACKS (LF) | MAJOR CRACKS | | | | | | RATING |
|---|---|---|---|---|---|---|---|---|---|---|
| | | | | WIDTH (IN) | LENGTH (FT) | START PNT X | START PNT Y,Z | END PNT X | END PNT Y,Z | |
| "GC-1" | WALL "A" | [*] | 10 | - | - | - | - | - | - | 8 |
| "GC-2" | FLOOR | [*] | 230 | - | - | - | - | - | - | 8 |
| "GC-3" | WALL "B" | [*] | 10 | - | - | - | - | - | - | 8 |
| | | | | | | | | | | |
| | | | | | | | | | | |
| | | | | | | | | | | |
| | | | | | | | | | | |

GRAPHIC SCALES:

0 1' 2' 4' 8' 12' 16'

3/16"=1'-0"

| REVISION NO. | DATE | REVISIONS | BY |
|---|---|---|---|
| | | | |

ATHER R. DAR
LICENSED PROFESSIONAL ENGINEER
No. 7808-S
HAWAII U.S.A.

Exp. Date: 4-30-20

THIS WORK WAS PREPARED BY ME OR UNDER MY SUPERVISION AND CONSTRUCTION OF THIS PROJECT WILL BE UNDER MY OBSERVATION

DEPARTMENT OF HAWAIIAN HOMELAND

# NANAKULI FLOOD CONTROL CHANNEL IMPROVEMENTS NANAKULI VALLEY, OAHU HAWAII

## CHANNEL SEGMENT 090 REPAIR DETAILS

| | |
|---|---|
| DESIGNED BY: | TTP |
| DRAWN BY: | AK, AP, DL |
| CHECKED BY: | AD |
| SUPV: | |
| DATE: | 03/05/2019 |

HAWAII ENGINEERING GROUP, Inc.
Civil & Structural Engineers
1088 BISHOP STREET #2506
HONOLULU, HI 96813
Tel: 808-533-2092

JOB NO.

SHEET C090
99 OF 225 SHTS

FILE ___ DRAWER ___ ___ FOLDER ___ ___

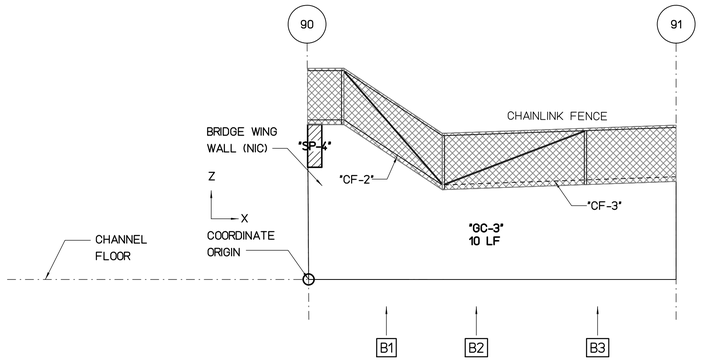


## WALL "B" FLATTEN VIEW

SCALE : 3/16" = 1'-0"

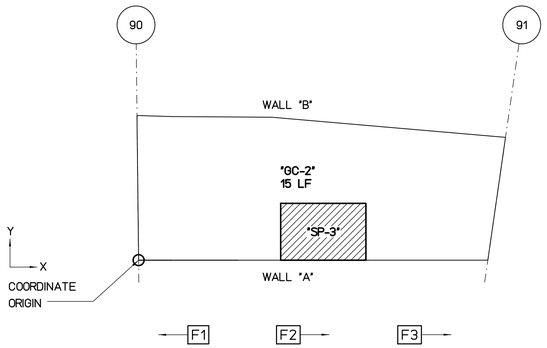


## FLOOR PLAN VIEW

SCALE : 3/16" = 1'-0"

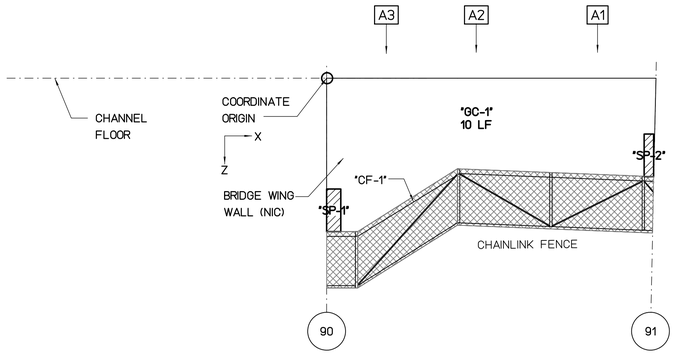


## WALL "A" FLATTEN VIEW

SCALE : 3/16" = 1'-0"

REPAIR LEGEND AND NOTES:

- [2] CRACK AND SPALL REPAIR TYPES, SEE SHEETS SR201 AND SR202 FOR DETAILS. TYPE [*] INDICATES NO-REPAIR
- (A) CHAINLINK FENCE REPAIR TYPES, SEE SHEETS SF201 AND SF202 FOR DETAILS
- 1.0> TOP OF WALL LEANING DISTANCE TOWARD CHANNEL IN INCHES, SEE SHEETS SL101 TO SL207 FOR CONCRETE LINING

PHOTO LEGEND:

- [A1] WALL "A" ELEVATION PHOTO IDENTIFICATION SEE FLATTEN VIEW FOR PHOTO LOCATION
- [B1] WALL "B" ELEVATION PHOTO IDENTIFICATION SEE FLATTEN VIEW FOR PHOTO LOCATION
- [F1] CHANNEL FLOOR PHOTO IDENTIFICATION SEE FLOOR PLAN VIEW FOR PHOTO LOCATION

B1



B2



B3



F1



F2



F3



A1



A2



A3



### SPALL REPAIR CHART

| MARK | LOCATION | REPAIR TYPE | SPALL DIMENSION L | SPALL DIMENSION W | SPALL DIMENSION D | SPALL VOLUME | SPALL CENTER COORDINATE X | SPALL CENTER COORDINATE Y OR Z | RATING |
|---|---|---|---|---|---|---|---|---|---|
| "SP-1" | WALL "A" | [3] | 12 | 36 | 2 | 864 | 0.5 | 9.3 | 7 |
| "SP-2" | WALL "A" | [3] | 8 | 36 | 3 | 864 | 22.6 | 5.4 | 7 |
| "SP-3" | FLOOR | [3] | 72 | 48 | 2 | 6912 | 13 | 2 | 7 |
| "SP-4" | WALL "B" | [3] | 12 | 36 | 2 | 864 | 0.4 | 9.4 | 7 |

### CHAINLINK FENCE REPAIR CHART

| MARK | LOCATION | REPAIR TYPE | POSTS | TOP RAIL | BOTTOM WIRE | BRACE | FABRIC |
|---|---|---|---|---|---|---|---|
| "CF-1" | WALL "A" | (D) | - | - | DAMAGED 24' | - | - |
| "CF-2" | WALL "B" | (D) | - | - | DAMAGED 10' | - | - |
| "CF-3" | WALL "B" | (D) | - | - | MISSING 17' | - | - |

### CRACK REPAIR CHART

| MARK | LOCATION | REPAIR TYPE | GENERAL CRACKS (LF) | MAJOR CRACKS WIDTH (IN) | MAJOR CRACKS LENGTH (FT) | MAJOR CRACKS START PNT X | MAJOR CRACKS START PNT Y,Z | MAJOR CRACKS END PNT X | MAJOR CRACKS END PNT Y,Z | RATING |
|---|---|---|---|---|---|---|---|---|---|---|
| "GC-1" | WALL "A" | [*] | 10 | - | - | - | - | - | - | 8 |
| "GC-2" | FLOOR | [*] | 15 | - | - | - | - | - | - | 8 |
| "GC-3" | WALL "B" | [*] | 10 | - | - | - | - | - | - | 8 |

GRAPHIC SCALES:

0 1' 2' 4' 8' 12' 16'

3/16"=1'-0"

| REVISION NO. | DATE | REVISIONS | BY |
|---|---|---|---|

ATHER R. DAR
LICENSED PROFESSIONAL ENGINEER
No. 7808-S
HAWAII U.S.A.
Exp. Date: 4-30-20

THIS WORK WAS PREPARED BY ME OR UNDER MY SUPERVISION AND CONSTRUCTION OF THIS PROJECT WILL BE UNDER MY OBSERVATION

DEPARTMENT OF HAWAIIAN HOMELAND

NANAKULI FLOOD CONTROL
CHANNEL IMPROVEMENTS
NANAKULI VALLEY, OAHU HAWAII

CHANNEL SEGMENT [091] REPAIR DETAILS

| | |
|---|---|
| DESIGNED BY: | TTP |
| DRAWN BY: | AK, AP, DL |
| CHECKED BY: | AD |
| SUPV: | |
| DATE: | 03/05/2019 |

HAWAII ENGINEERING GROUP, Inc.
Civil & Structural Engineers
1088 BISHOP STREET #2506
HONOLULU, HI 96813
Tel: 808-533-2092

JOB NO.

SHEET C091
100OF 225 SHTS

FILE ___ DRAWER ___ ___ FOLDER ___ ___

Plot date: 15-Apr-2020

Full Size Plot

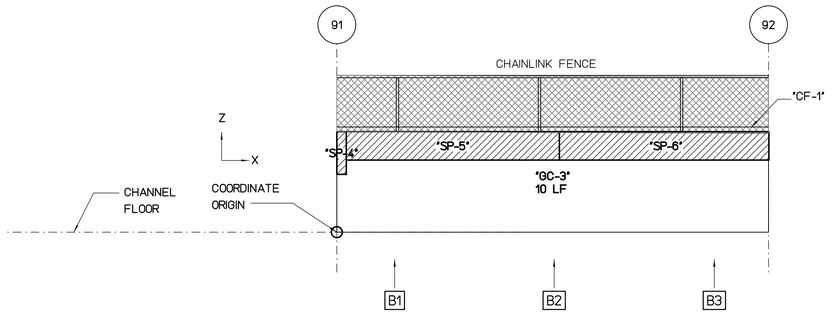


## WALL "B" FLATTEN VIEW

SCALE : 3/16" = 1'-0"

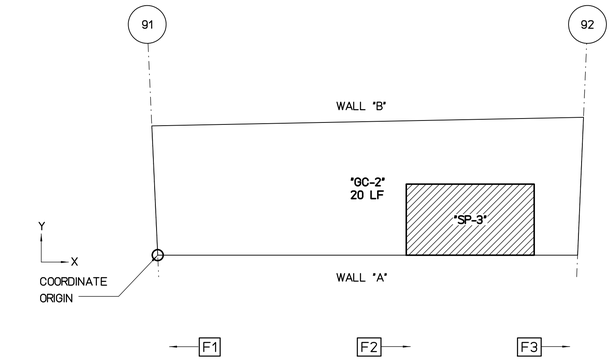


## FLOOR PLAN VIEW

SCALE : 3/16" = 1'-0"

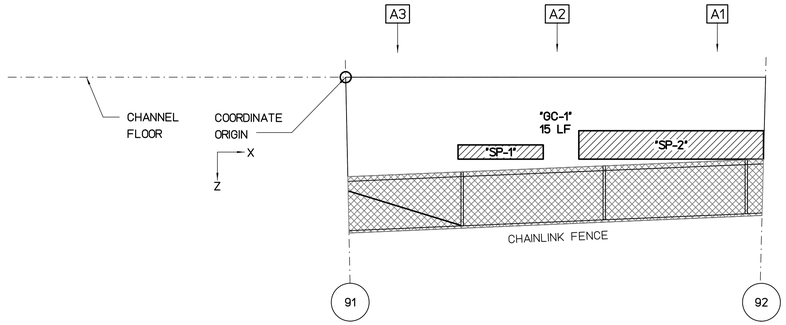


## WALL "A" FLATTEN VIEW

SCALE : 3/16" = 1'-0"

REPAIR LEGEND AND NOTES:

- [2] CRACK AND SPALL REPAIR TYPES, SEE SHEETS SR201 AND SR202 FOR DETAILS. TYPE [*] INDICATES NO-REPAIR
- (A) CHAINLINK FENCE REPAIR TYPES, SEE SHEETS SF201 AND SF202 FOR DETAILS
- 1.0> TOP OF WALL LEANING DISTANCE TOWARD CHANNEL IN INCHES, SEE SHEETS SL101 TO SL207 FOR CONCRETE LINING

PHOTO LEGEND:

- [A1] WALL "A" ELEVATION PHOTO IDENTIFICATION SEE FLATTEN VIEW FOR PHOTO LOCATION
- [B1] WALL "B" ELEVATION PHOTO IDENTIFICATION SEE FLATTEN VIEW FOR PHOTO LOCATION
- [F1] CHANNEL FLOOR PHOTO IDENTIFICATION SEE FLOOR PLAN VIEW FOR PHOTO LOCATION

B1



B2



B3



F1



F2



F3



A1



A2



A3



### SPALL REPAIR CHART

| MARK | LOCATION | REPAIR TYPE | SPALL DIMENSION L | SPALL DIMENSION W | SPALL DIMENSION D | SPALL VOLUME | SPALL CENTER COORDINATE X | SPALL CENTER COORDINATE Y OR Z | RATING |
|---|---|---|---|---|---|---|---|---|---|
| "SP-1" | WALL "A" | [3] | 72 | 12 | 2 | 1728 | 10.9 | 5.3 | 7 |
| "SP-2" | WALL "A" | [3] | 156 | 24 | 2 | 7488 | 22.9 | 4.8 | 7 |
| "SP-3" | FLOOR | [3] | 108 | 60 | 2 | 12960 | 22 | 2.5 | 7 |
| "SP-4" | WALL "B" | [3] | 8 | 36 | 2 | 576 | 0.3 | 5.6 | 7 |
| "SP-5" | WALL "B" | [3] | 180 | 24 | 2 | 8640 | 8.2 | 6.1 | 7 |
| "SP-6" | WALL "B" | [3] | 177 | 24 | 2 | 8496 | 23.2 | 6.1 | 7 |
| | | | | | | | | | |
| | | | | | | | | | |

### CHAINLINK FENCE REPAIR CHART

| MARK | LOCATION | REPAIR TYPE | POSTS | TOP RAIL | BOTTOM WIRE | BRACE | FABRIC |
|---|---|---|---|---|---|---|---|
| "CF-1" | WALL "B" | (A) | - | - | DAMAGED 31' | - | - |
| | | | | | | | |
| | | | | | | | |
| | | | | | | | |
| | | | | | | | |
| | | | | | | | |
| | | | | | | | |
| | | | | | | | |
| | | | | | | | |

### CRACK REPAIR CHART

| MARK | LOCATION | REPAIR TYPE | GENERAL CRACKS (LF) | MAJOR CRACKS WIDTH (IN) | MAJOR CRACKS LENGTH (FT) | MAJOR CRACKS START PNT X | MAJOR CRACKS START PNT Y,Z | MAJOR CRACKS END PNT X | MAJOR CRACKS END PNT Y,Z | RATING |
|---|---|---|---|---|---|---|---|---|---|---|
| "GC-1" | WALL "A" | [*] | 15 | - | - | - | - | - | - | 8 |
| "GC-2" | FLOOR | [*] | 20 | - | - | - | - | - | - | 8 |
| "GC-3" | WALL "B" | [*] | 10 | - | - | - | - | - | - | 8 |
| | | | | | | | | | | |
| | | | | | | | | | | |
| | | | | | | | | | | |
| | | | | | | | | | | |

GRAPHIC SCALES:

0 1' 2' 4' 8' 12' 16'

3/16"=1'-0"

| REVISION NO. | DATE | REVISIONS | BY |
|---|---|---|---|
| | | | |

ATHER R. DAR
LICENSED PROFESSIONAL ENGINEER
No. 7808-S
HAWAII U.S.A.

Exp. Date: 4-30-20

THIS WORK WAS PREPARED BY ME OR UNDER MY SUPERVISION AND CONSTRUCTION OF THIS PROJECT WILL BE UNDER MY OBSERVATION

DEPARTMENT OF HAWAIIAN HOMELAND

# NANAKULI FLOOD CONTROL CHANNEL IMPROVEMENTS NANAKULI VALLEY, OAHU HAWAII

CHANNEL SEGMENT [092] REPAIR DETAILS

| | |
|---|---|
| DESIGNED BY: | TTP |
| DRAWN BY: | AK, AP, DL |
| CHECKED BY: | AD |
| SUPV: | |
| DATE: | 03/05/2019 |


HAWAII ENGINEERING GROUP, Inc.
Civil & Structural Engineers
1088 BISHOP STREET #2506
HONOLULU, HI 96813
Tel: 808-533-2092


JOB NO.

SHEET C092
101 OF 225 SHTS

FILE ___ DRAWER ___ ___ FOLDER ___ ___

Plot date: 15-Apr-2020

Full Size Plot

Plot date: 15-Apr-2020
Full Size Plot

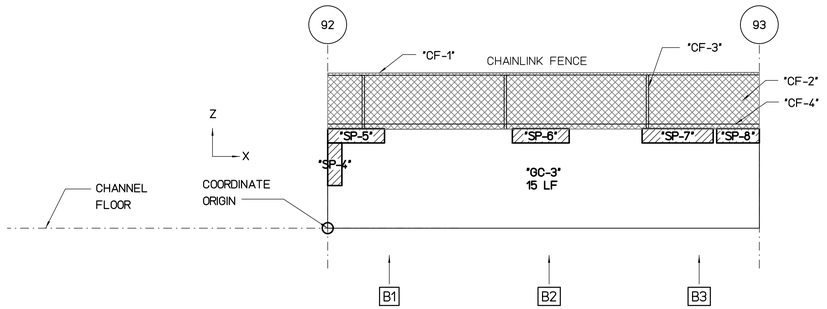


## WALL "B" FLATTEN VIEW

SCALE : 3/16" = 1'-0"

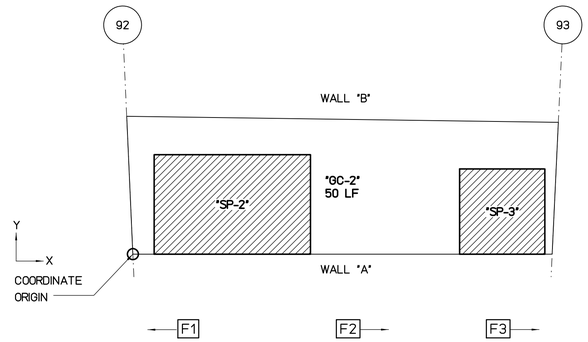


## FLOOR PLAN VIEW

SCALE : 3/16" = 1'-0"

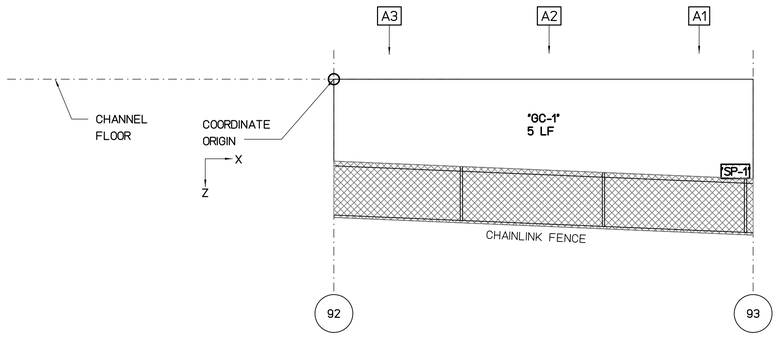


## WALL "A" FLATTEN VIEW

SCALE : 3/16" = 1'-0"

REPAIR LEGEND AND NOTES:

- 2 — CRACK AND SPALL REPAIR TYPES, SEE SHEETS SR201 AND SR202 FOR DETAILS. TYPE * INDICATES NO-REPAIR
- (A) — CHAINLINK FENCE REPAIR TYPES, SEE SHEETS SF201 AND SF202 FOR DETAILS
- 1.0 — TOP OF WALL LEANING DISTANCE TOWARD CHANNEL IN INCHES, SEE SHEETS SL101 TO SL207 FOR CONCRETE LINING

PHOTO LEGEND:

- A1 — WALL "A" ELEVATION PHOTO IDENTIFICATION SEE FLATTEN VIEW FOR PHOTO LOCATION
- B1 — WALL "B" ELEVATION PHOTO IDENTIFICATION SEE FLATTEN VIEW FOR PHOTO LOCATION
- F1 — CHANNEL FLOOR PHOTO IDENTIFICATION SEE FLOOR PLAN VIEW FOR PHOTO LOCATION

B1



B2



B3



F1



F2



F3



A1



A2



A3



### SPALL REPAIR CHART

| MARK | LOCATION | REPAIR TYPE | SPALL DIMENSION L | SPALL DIMENSION W | SPALL DIMENSION D | SPALL VOLUME | SPALL CENTER COORDINATE X | SPALL CENTER COORDINATE Y OR Z | RATING |
|---|---|---|---|---|---|---|---|---|---|
| "SP-1" | WALL "A" | 3 | 24 | 12 | 2 | 576 | 28.3 | 6 | 7 |
| "SP-2" | FLOOR | 3 | 132 | 84 | 2 | 22176 | 7 | 3.5 | 7 |
| "SP-3" | FLOOR | 3 | 72 | 72 | 2 | 10368 | 26 | 3 | 7 |
| "SP-4" | WALL "B" | 3 | 12 | 36 | 2 | 864 | 0.5 | 4.5 | 7 |
| "SP-5" | WALL "B" | 3 | 48 | 12 | 2 | 1152 | 2 | 6.5 | 7 |
| "SP-6" | WALL "B" | 3 | 48 | 12 | 2 | 1152 | 15 | 6.5 | 7 |
| "SP-7" | WALL "B" | 3 | 60 | 12 | 2 | 1440 | 24.6 | 6.5 | 7 |
| "SP-8" | WALL "B" | 3 | 36 | 12 | 2 | 864 | 28.9 | 6.5 | 7 |

### CHAINLINK FENCE REPAIR CHART

| MARK | LOCATION | REPAIR TYPE | POSTS | TOP RAIL | BOTTOM WIRE | BRACE | FABRIC |
|---|---|---|---|---|---|---|---|
| "CF-1" | WALL "B" | (C) | - | DAMAGED 20' | - | - | - |
| "CF-2" | WALL "B" | (E) | - | - | - | - | DAMAGED 30'x4' |
| "CF-3" | WALL "B" | (A) | BENT 1 | - | - | - | - |
| "CF-4" | WALL "B" | (D) | - | - | DAMAGED 30' | - | - |

### CRACK REPAIR CHART

| MARK | LOCATION | REPAIR TYPE | GENERAL CRACKS (LF) | MAJOR CRACKS WIDTH (IN) | MAJOR CRACKS LENGTH (FT) | MAJOR CRACKS START PNT X | MAJOR CRACKS START PNT Y,Z | MAJOR CRACKS END PNT X | MAJOR CRACKS END PNT Y,Z | RATING |
|---|---|---|---|---|---|---|---|---|---|---|
| "GC-1" | WALL "A" | * | 5 | - | - | - | - | - | - | 9 |
| "GC-2" | FLOOR | * | 50 | - | - | - | - | - | - | 8 |
| "GC-3" | WALL "B" | * | 15 | - | - | - | - | - | - | 8 |

GRAPHIC SCALES:

0 1' 2' 4' 8' 12' 16'

3/16"=1'-0"

| REVISION NO. | DATE | REVISIONS | BY |
|---|---|---|---|

ATHER R. DAR — LICENSED PROFESSIONAL ENGINEER — No. 7808-S — HAWAII U.S.A.

Exp. Date: 4-30-20

THIS WORK WAS PREPARED BY ME OR UNDER MY SUPERVISION AND CONSTRUCTION OF THIS PROJECT WILL BE UNDER MY OBSERVATION

DEPARTMENT OF HAWAIIAN HOMELAND

# NANAKULI FLOOD CONTROL CHANNEL IMPROVEMENTS NANAKULI VALLEY, OAHU HAWAII

CHANNEL SEGMENT 093 REPAIR DETAILS

| | |
|---|---|
| DESIGNED BY: | TTP |
| DRAWN BY: | AK, AP, DL |
| CHECKED BY: | AD |
| SUPV: | |
| DATE: | 03/05/2019 |

HAWAII ENGINEERING GROUP, Inc.
Civil & Structural Engineers
1088 BISHOP STREET #2506
HONOLULU, HI 96813
Tel: 808-533-2092

JOB NO.

SHEET C093

102 OF 225 SHTS

FILE ___ DRAWER ___ ___ FOLDER ___ ___

Plot date: 15-Apr-2020
Full Size Plot

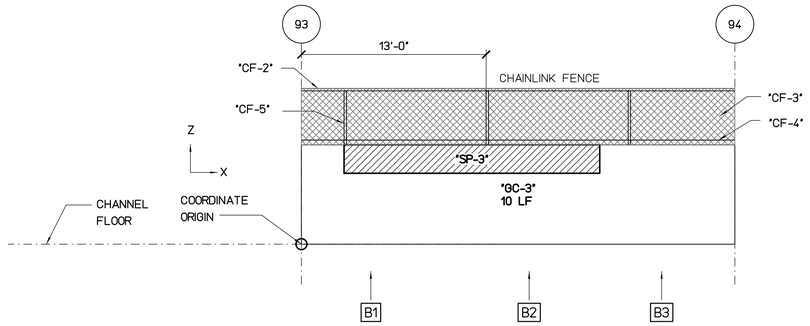


## WALL "B" FLATTEN VIEW

SCALE : 3/16" = 1'-0"

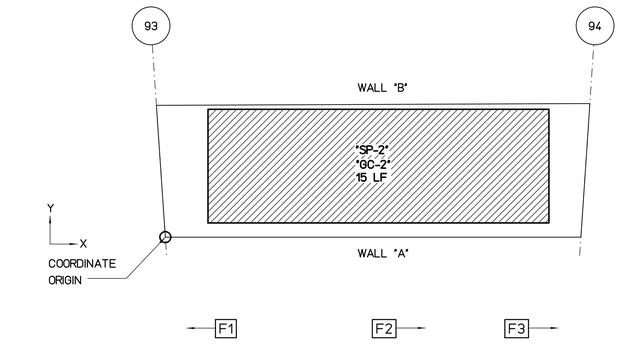


## FLOOR PLAN VIEW

SCALE : 3/16" = 1'-0"

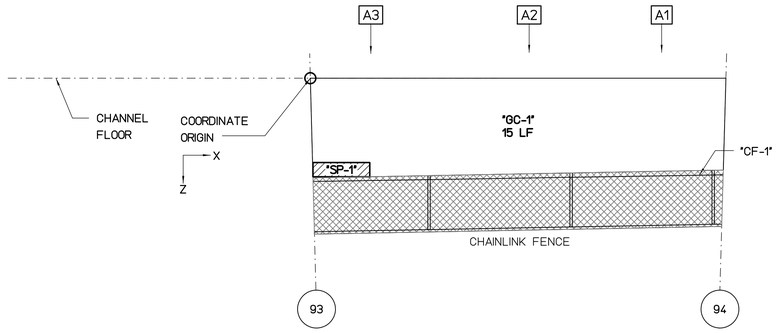


## WALL "A" FLATTEN VIEW

SCALE : 3/16" = 1'-0"

REPAIR LEGEND AND NOTES:

- 2 — CRACK AND SPALL REPAIR TYPES, SEE SHEETS SR201 AND SR202 FOR DETAILS. TYPE [*] INDICATES NO-REPAIR
- (A) — CHAINLINK FENCE REPAIR TYPES, SEE SHEETS SF201 AND SF202 FOR DETAILS
- 1.0 — TOP OF WALL LEANING DISTANCE TOWARD CHANNEL IN INCHES, SEE SHEETS SL101 TO SL207 FOR CONCRETE LINING

PHOTO LEGEND:

- A1 — WALL "A" ELEVATION PHOTO IDENTIFICATION SEE FLATTEN VIEW FOR PHOTO LOCATION
- B1 — WALL "B" ELEVATION PHOTO IDENTIFICATION SEE FLATTEN VIEW FOR PHOTO LOCATION
- F1 — CHANNEL FLOOR PHOTO IDENTIFICATION SEE FLOOR PLAN VIEW FOR PHOTO LOCATION

B1



B2



B3



F1



F2



F3



A1



A2



A3



### SPALL REPAIR CHART

| MARK | LOCATION | REPAIR TYPE | SPALL DIMENSION L | SPALL DIMENSION W | SPALL DIMENSION D | SPALL VOLUME | SPALL CENTER COORDINATE X | SPALL CENTER COORDINATE Y OR Z | RATING |
|---|---|---|---|---|---|---|---|---|---|
| "SP-1" | WALL "A" | 3 | 48 | 12 | 2 | 1152 | 2.2 | 6.5 | 7 |
| "SP-2" | FLOOR | 3 | 288 | 96 | 2 | 55296 | 14.5 | 6.2 | 7 |
| "SP-3" | WALL "B" | 3 | 216 | 24 | 2 | 10368 | 12 | 6 | 7 |

### CHAINLINK FENCE REPAIR CHART

| MARK | LOCATION | REPAIR TYPE | POSTS | TOP RAIL | BOTTOM WIRE | BRACE | FABRIC |
|---|---|---|---|---|---|---|---|
| "CF-1" | WALL "A" | (D) | - | - | DAMAGED 29' | - | - |
| "CF-2" | WALL "B" | (C) | - | BENT 13' | - | - | - |
| "CF-3" | WALL "B" | (E) | - | - | - | - | DAMAGED 31'x4' |
| "CF-4" | WALL "B" | (D) | - | - | DAMAGED 31' | - | - |
| "CF-5" | WALL "B" | (A) | BENT 1 | - | - | - | - |

### CRACK REPAIR CHART

| MARK | LOCATION | REPAIR TYPE | GENERAL CRACKS (LF) | MAJOR CRACKS WIDTH (IN) | MAJOR CRACKS LENGTH (FT) | MAJOR CRACKS START PNT X | MAJOR CRACKS START PNT Y,Z | MAJOR CRACKS END PNT X | MAJOR CRACKS END PNT Y,Z | RATING |
|---|---|---|---|---|---|---|---|---|---|---|
| "GC-1" | WALL "A" | * | 15 | - | - | - | - | - | - | 8 |
| "GC-2" | FLOOR | * | 15 | - | - | - | - | - | - | 8 |
| "GC-3" | WALL "B" | * | 10 | - | - | - | - | - | - | 8 |

GRAPHIC SCALES:

0 1' 2' 4' 8' 12' 16'

3/16"=1'-0"

| REVISION NO. | DATE | REVISIONS | BY |
|---|---|---|---|

ATHER R. DAR
LICENSED PROFESSIONAL ENGINEER
No. 7808-S
HAWAII U.S.A.
Exp. Date: 4-30-20

THIS WORK WAS PREPARED BY ME OR UNDER MY SUPERVISION AND CONSTRUCTION OF THIS PROJECT WILL BE UNDER MY OBSERVATION

DEPARTMENT OF HAWAIIAN HOMELAND

# NANAKULI FLOOD CONTROL CHANNEL IMPROVEMENTS NANAKULI VALLEY, OAHU HAWAII

## CHANNEL SEGMENT 094 REPAIR DETAILS

| | |
|---|---|
| DESIGNED BY: | TTP |
| DRAWN BY: | AK, AP, DL |
| CHECKED BY: | AD |
| SUPV: | |
| DATE: | 03/05/2019 |

HAWAII ENGINEERING GROUP, Inc.
Civil & Structural Engineers
1088 BISHOP STREET #2506
HONOLULU, HI 96813
Tel: 808-533-2092

JOB NO.

SHEET C094
103 OF 225 SHTS

FILE ___ DRAWER ___ ___ FOLDER ___ ___

Plot date: 15-Apr-2020
Full Size Plot

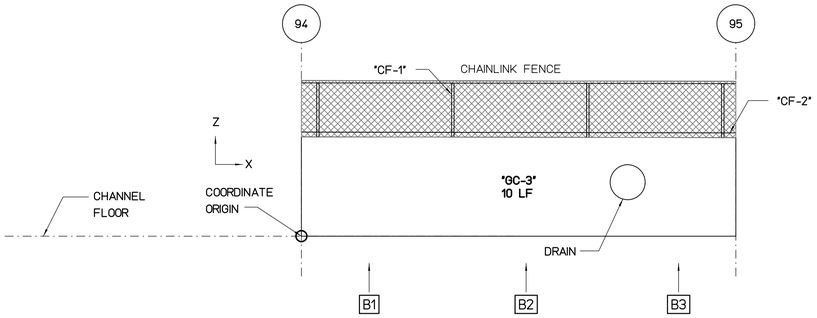


## WALL "B" FLATTEN VIEW

SCALE : 3/16" = 1'-0"

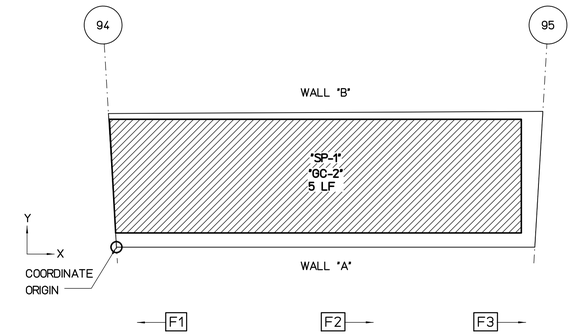


## FLOOR PLAN VIEW

SCALE : 3/16" = 1'-0"

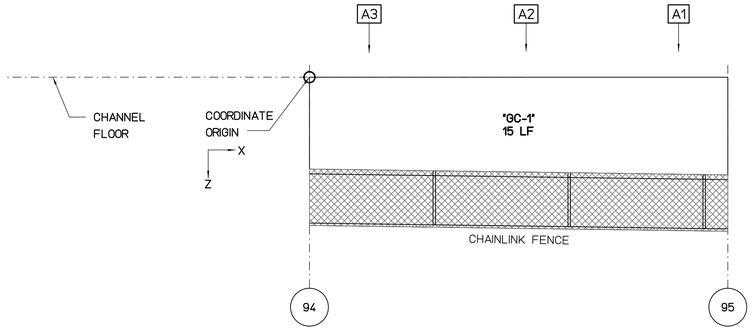


## WALL "A" FLATTEN VIEW

SCALE : 3/16" = 1'-0"

REPAIR LEGEND AND NOTES:

- [2] CRACK AND SPALL REPAIR TYPES, SEE SHEETS SR201 AND SR202 FOR DETAILS. TYPE [*] INDICATES NO-REPAIR
- (A) CHAINLINK FENCE REPAIR TYPES, SEE SHEETS SF201 AND SF202 FOR DETAILS
- [1.0] TOP OF WALL LEANING DISTANCE TOWARD CHANNEL IN INCHES, SEE SHEETS SL101 TO SL207 FOR CONCRETE LINING

PHOTO LEGEND:

- [A1] WALL "A" ELEVATION PHOTO IDENTIFICATION SEE FLATTEN VIEW FOR PHOTO LOCATION
- [B1] WALL "B" ELEVATION PHOTO IDENTIFICATION SEE FLATTEN VIEW FOR PHOTO LOCATION
- [F1] CHANNEL FLOOR PHOTO IDENTIFICATION SEE FLOOR PLAN VIEW FOR PHOTO LOCATION

B1



B2



B3



F1



F2



F3



A1



A2



A3



### SPALL REPAIR CHART

| MARK | LOCATION | REPAIR TYPE | SPALL DIMENSION | | | SPALL VOLUME | SPALL CENTER COORDINATE | | RATING |
|---|---|---|---|---|---|---|---|---|---|
| | | | L | W | D | | X | Y OR Z | |
| "SP-1" | FLOOR | [3] | 348 | 96 | 2 | 66816 | 14 | 5 | 6 |

### CHAINLINK FENCE REPAIR CHART

| MARK | LOCATION | REPAIR TYPE | POSTS | TOP RAIL | BOTTOM WIRE | BRACE | FABRIC |
|---|---|---|---|---|---|---|---|
| "CF-1" | WALL "B" | (A) | DAMAGED 1 | - | - | - | - |
| "CF-2" | WALL "B" | (D) | - | - | DAMAGED 31' | - | - |

### CRACK REPAIR CHART

| MARK | LOCATION | REPAIR TYPE | GENERAL CRACKS (LF) | MAJOR CRACKS | | | | | | RATING |
|---|---|---|---|---|---|---|---|---|---|---|
| | | | | WIDTH (IN) | LENGTH (FT) | START PNT X | START PNT Y,Z | END PNT X | END PNT Y,Z | |
| "GC-1" | WALL "A" | [*] | 15 | - | - | - | - | - | - | 8 |
| "GC-2" | FLOOR | [*] | 5 | - | - | - | - | - | - | 9 |
| "GC-3" | WALL "B" | [*] | 10 | - | - | - | - | - | - | 8 |

GRAPHIC SCALES:

0 1' 2' 4' 8' 12' 16'

3/16"=1'-0"

| REVISION NO. | DATE | REVISIONS | BY |
|---|---|---|---|
| | | | |

ATHER R. DAR
LICENSED PROFESSIONAL ENGINEER
No. 7808-S
HAWAII U.S.A.
Exp. Date: 4-30-20

THIS WORK WAS PREPARED BY ME OR UNDER MY SUPERVISION AND CONSTRUCTION OF THIS PROJECT WILL BE UNDER MY OBSERVATION

DEPARTMENT OF HAWAIIAN HOMELAND

# NANAKULI FLOOD CONTROL CHANNEL IMPROVEMENTS NANAKULI VALLEY, OAHU HAWAII

## CHANNEL SEGMENT [095] REPAIR DETAILS

| | |
|---|---|
| DESIGNED BY: | TTP |
| DRAWN BY: | AK, AP, DL |
| CHECKED BY: | AD |
| SUPV: | |
| DATE: | 03/05/2019 |

HAWAII ENGINEERING GROUP, Inc.
Civil & Structural Engineers
1088 BISHOP STREET #2506
HONOLULU, HI 96813
Tel: 808-533-2092

JOB NO.

SHEET C095
104 OF 225 SHTS

FILE ___ DRAWER ___ ___ FOLDER ___ ___

Plot date: 15-Apr-2020
Full Size Plot

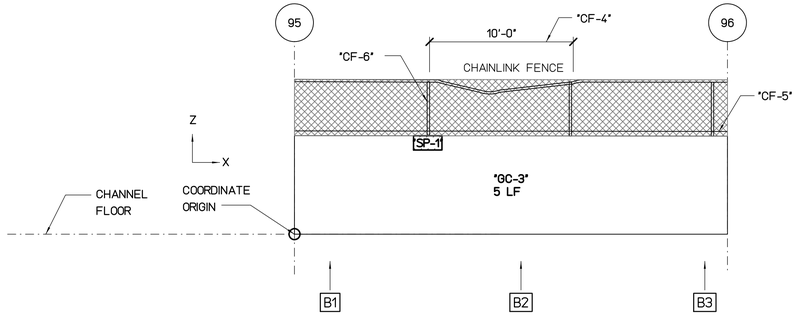


## WALL "B" FLATTEN VIEW

SCALE : 3/16" = 1'-0"

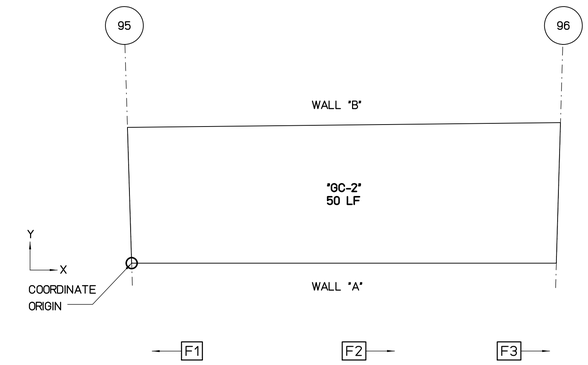


## FLOOR PLAN VIEW

SCALE : 3/16" = 1'-0"

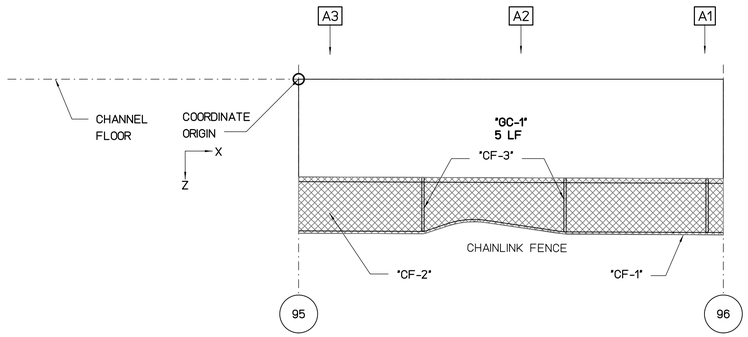


## WALL "A" FLATTEN VIEW

SCALE : 3/16" = 1'-0"

REPAIR LEGEND AND NOTES:

- 2 — CRACK AND SPALL REPAIR TYPES, SEE SHEETS SR201 AND SR202 FOR DETAILS. TYPE [*] INDICATES NO-REPAIR
- (A) — CHAINLINK FENCE REPAIR TYPES, SEE SHEETS SF201 AND SF202 FOR DETAILS
- 1.0 — TOP OF WALL LEANING DISTANCE TOWARD CHANNEL IN INCHES, SEE SHEETS SL101 TO SL207 FOR CONCRETE LINING

PHOTO LEGEND:

- A1 — WALL "A" ELEVATION PHOTO IDENTIFICATION SEE FLATTEN VIEW FOR PHOTO LOCATION
- B1 — WALL "B" ELEVATION PHOTO IDENTIFICATION SEE FLATTEN VIEW FOR PHOTO LOCATION
- F1 — CHANNEL FLOOR PHOTO IDENTIFICATION SEE FLOOR PLAN VIEW FOR PHOTO LOCATION

B1



B2



B3



F1



F2



F3



A1



A2



A3



### SPALL REPAIR CHART

| MARK | LOCATION | REPAIR TYPE | SPALL DIMENSION L | SPALL DIMENSION W | SPALL DIMENSION D | SPALL VOLUME | SPALL CENTER COORDINATE X | SPALL CENTER COORDINATE Y OR Z | RATING |
|---|---|---|---|---|---|---|---|---|---|
| "SP-1" | WALL "B" | 3 | 24 | 12 | 2 | 576 | 9.4 | 6.4 | 7 |

### CHAINLINK FENCE REPAIR CHART

| MARK | LOCATION | REPAIR TYPE | POSTS | TOP RAIL | BOTTOM WIRE | BRACE | FABRIC |
|---|---|---|---|---|---|---|---|
| "CF-1" | WALL "A" | (C) | - | BENT 30' | - | - | - |
| "CF-2" | WALL "A" | (E) | - | - | - | - | DAMAGED 30"x4' |
| "CF-3" | WALL "A" | (A) | DAMAGED 2 | - | - | - | - |
| "CF-4" | WALL "B" | (C) | - | BENT 10' | - | - | - |
| "CF-5" | WALL "B" | (D) | - | - | DAMAGED 31' | - | - |
| "CF-6" | WALL "B" | (A) | BENT 1 | - | - | - | - |

### CRACK REPAIR CHART

| MARK | LOCATION | REPAIR TYPE | GENERAL CRACKS (LF) | MAJOR CRACKS WIDTH (IN) | MAJOR CRACKS LENGTH (FT) | MAJOR CRACKS START PNT X | MAJOR CRACKS START PNT Y,Z | MAJOR CRACKS END PNT X | MAJOR CRACKS END PNT Y,Z | RATING |
|---|---|---|---|---|---|---|---|---|---|---|
| "GC-1" | WALL "A" | * | 5 | - | - | - | - | - | - | 9 |
| "GC-2" | FLOOR | * | 50 | - | - | - | - | - | - | 8 |
| "GC-3" | WALL "B" | * | 5 | - | - | - | - | - | - | 9 |

GRAPHIC SCALES:

0 1' 2' 4' 8' 12' 16'

3/16"=1'-0"

| REVISION NO. | DATE | REVISIONS | BY |
|---|---|---|---|

ATHER R. DAR
LICENSED PROFESSIONAL ENGINEER
No. 7808-S
HAWAII U.S.A.

Exp. Date: 4-30-20

THIS WORK WAS PREPARED BY ME OR UNDER MY SUPERVISION AND CONSTRUCTION OF THIS PROJECT WILL BE UNDER MY OBSERVATION

DEPARTMENT OF HAWAIIAN HOMELAND

# NANAKULI FLOOD CONTROL CHANNEL IMPROVEMENTS NANAKULI VALLEY, OAHU HAWAII

CHANNEL SEGMENT 096 REPAIR DETAILS

| | |
|---|---|
| DESIGNED BY: | TTP |
| DRAWN BY: | AK, AP, DL |
| CHECKED BY: | AD |
| SUPV: | |
| DATE: | 03/05/2019 |

HAWAII ENGINEERING GROUP, Inc.
Civil & Structural Engineers
1088 BISHOP STREET #2506
HONOLULU, HI 96813
Tel: 808-533-2092

JOB NO.

SHEET C096
105 OF 225 SHTS

FILE ___ DRAWER ___ ___ FOLDER ___ ___

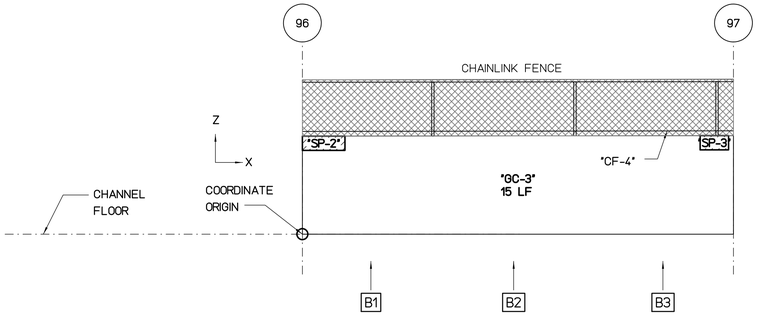


## WALL "B" FLATTEN VIEW

SCALE : 3/16" = 1'-0"

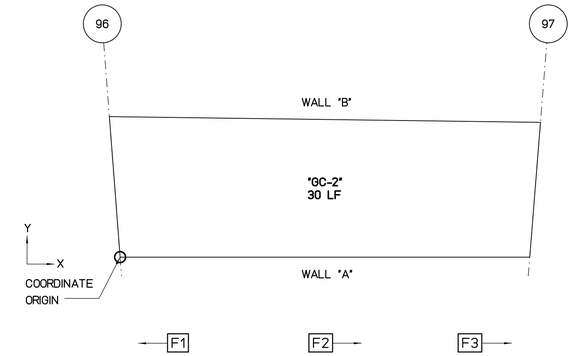


## FLOOR PLAN VIEW

SCALE : 3/16" = 1'-0"

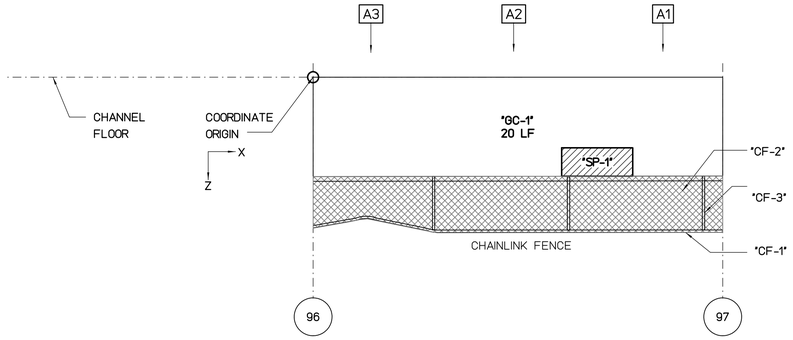


## WALL "A" FLATTEN VIEW

SCALE : 3/16" = 1'-0"

REPAIR LEGEND AND NOTES:

- 2 — CRACK AND SPALL REPAIR TYPES, SEE SHEETS SR201 AND SR202 FOR DETAILS. TYPE * INDICATES NO-REPAIR
- Ⓐ — CHAINLINK FENCE REPAIR TYPES, SEE SHEETS SF201 AND SF202 FOR DETAILS
- 1.0 — TOP OF WALL LEANING DISTANCE TOWARD CHANNEL IN INCHES, SEE SHEETS SL101 TO SL207 FOR CONCRETE LINING

PHOTO LEGEND:

- A1 — WALL "A" ELEVATION PHOTO IDENTIFICATION SEE FLATTEN VIEW FOR PHOTO LOCATION
- B1 — WALL "B" ELEVATION PHOTO IDENTIFICATION SEE FLATTEN VIEW FOR PHOTO LOCATION
- F1 — CHANNEL FLOOR PHOTO IDENTIFICATION SEE FLOOR PLAN VIEW FOR PHOTO LOCATION

B1



B2



B3



F1



F2



F3



A1



A2



A3



### SPALL REPAIR CHART

| MARK | LOCATION | REPAIR TYPE | SPALL DIMENSION L | SPALL DIMENSION W | SPALL DIMENSION D | SPALL VOLUME | SPALL CENTER COORDINATE X | SPALL CENTER COORDINATE Y OR Z | RATING |
|---|---|---|---|---|---|---|---|---|---|
| "SP-1" | WALL "A" | 3 | 60 | 24 | 2 | 2880 | 20 | 6 | 7 |
| "SP-2" | WALL "B" | 3 | 36 | 12 | 2 | 864 | 1.5 | 6.4 | 7 |
| "SP-3" | WALL "B" | 3 | 24 | 12 | 2 | 576 | 29 | 6.4 | 7 |

### CHAINLINK FENCE REPAIR CHART

| MARK | LOCATION | REPAIR TYPE | POSTS | TOP RAIL | BOTTOM WIRE | BRACE | FABRIC |
|---|---|---|---|---|---|---|---|
| "CF-1" | WALL "A" | Ⓒ | - | DAMAGED 29' | - | - | - |
| "CF-2" | WALL "A" | Ⓔ | - | - | - | - | DAMAGED 29'x4' |
| "CF-3" | WALL "A" | Ⓐ | DAMAGED 1 | - | - | - | - |
| "CF-4" | WALL "B" | Ⓓ | - | - | DAMAGED 31' | - | - |

### CRACK REPAIR CHART

| MARK | LOCATION | REPAIR TYPE | GENERAL CRACKS (LF) | MAJOR CRACKS WIDTH (IN) | MAJOR CRACKS LENGTH (FT) | MAJOR CRACKS START PNT X | MAJOR CRACKS START PNT Y,Z | MAJOR CRACKS END PNT X | MAJOR CRACKS END PNT Y,Z | RATING |
|---|---|---|---|---|---|---|---|---|---|---|
| "GC-1" | WALL "A" | * | 20 | - | - | - | - | - | - | 8 |
| "GC-2" | FLOOR | * | 30 | - | - | - | - | - | - | 8 |
| "GC-3" | WALL "B" | * | 15 | - | - | - | - | - | - | 8 |

GRAPHIC SCALES:

0 1' 2' 4' 8' 12' 16'

3/16"=1'-0"

| REVISION NO. | DATE | REVISIONS | BY |
|---|---|---|---|

ATHER R. DAR — LICENSED PROFESSIONAL ENGINEER — No. 7808-S — HAWAII U.S.A.

Exp. Date: 4-30-20

THIS WORK WAS PREPARED BY ME OR UNDER MY SUPERVISION AND CONSTRUCTION OF THIS PROJECT WILL BE UNDER MY OBSERVATION

DEPARTMENT OF HAWAIIAN HOMELAND

# NANAKULI FLOOD CONTROL CHANNEL IMPROVEMENTS NANAKULI VALLEY, OAHU HAWAII

CHANNEL SEGMENT 097 REPAIR DETAILS

| | |
|---|---|
| DESIGNED BY: | TTP |
| DRAWN BY: | AK, AP, DL |
| CHECKED BY: | AD |
| SUPV: | |
| DATE: | 03/05/2019 |


HAWAII ENGINEERING GROUP, Inc.
Civil & Structural Engineers
1088 BISHOP STREET #2506
HONOLULU, HI 96813
Tel: 808-533-2092


JOB NO.

SHEET C097

106 OF 225 SHTS

FILE ___ DRAWER ___ ___ FOLDER ___ ___

Plot date: 15-Apr-2020

Full Size Plot

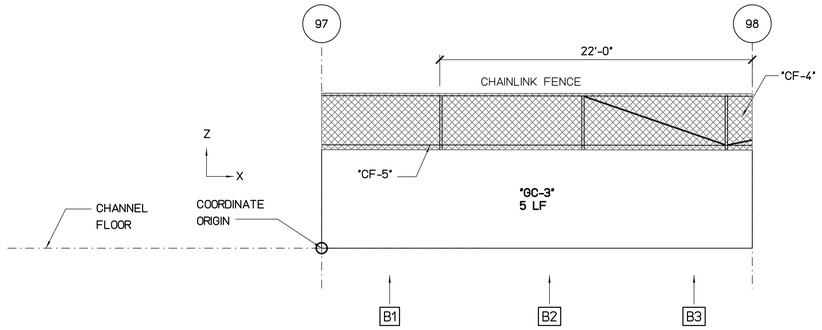


## WALL "B" FLATTEN VIEW

SCALE : 3/16" = 1'-0"

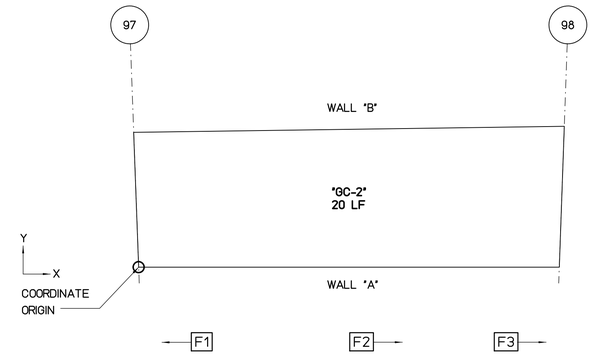


## FLOOR PLAN VIEW

SCALE : 3/16" = 1'-0"

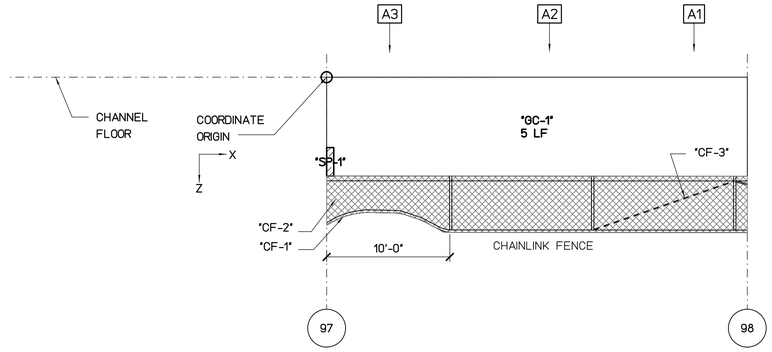


## WALL "A" FLATTEN VIEW

SCALE : 3/16" = 1'-0"

REPAIR LEGEND AND NOTES:

- [2] CRACK AND SPALL REPAIR TYPES, SEE SHEETS SR201 AND SR202 FOR DETAILS. TYPE [*] INDICATES NO-REPAIR
- (A) CHAINLINK FENCE REPAIR TYPES, SEE SHEETS SF201 AND SF202 FOR DETAILS
- 1.0> TOP OF WALL LEANING DISTANCE TOWARD CHANNEL IN INCHES, SEE SHEETS SL101 TO SL207 FOR CONCRETE LINING

PHOTO LEGEND:

- [A1] WALL "A" ELEVATION PHOTO IDENTIFICATION SEE FLATTEN VIEW FOR PHOTO LOCATION
- [B1] WALL "B" ELEVATION PHOTO IDENTIFICATION SEE FLATTEN VIEW FOR PHOTO LOCATION
- [F1] CHANNEL FLOOR PHOTO IDENTIFICATION SEE FLOOR PLAN VIEW FOR PHOTO LOCATION

B1



B2



B3



F1



F2



F3



A1



A2



A3



### SPALL REPAIR CHART

| MARK | LOCATION | REPAIR TYPE | SPALL DIMENSION L | SPALL DIMENSION W | SPALL DIMENSION D | SPALL VOLUME | SPALL CENTER COORDINATE X | SPALL CENTER COORDINATE Y OR Z | RATING |
|---|---|---|---|---|---|---|---|---|---|
| "SP-1" | WALL "A" | [3] | 6 | 24 | 2 | 288 | 0 | 6 | 6 |

### CHAINLINK FENCE REPAIR CHART

| MARK | LOCATION | REPAIR TYPE | POSTS | TOP RAIL | BOTTOM WIRE | BRACE | FABRIC |
|---|---|---|---|---|---|---|---|
| "CF-1" | WALL "A" | (C) | - | BENT 10' | - | - | - |
| "CF-2" | WALL "A" | (E) | - | - | - | - | DAMAGED 10'x4' |
| "CF-3" | WALL "A" | (B) | - | - | - | MISSING 1 | - |
| "CF-4" | WALL "B" | (E) | - | - | - | - | DAMAGED 22'x4' |
| "CF-5" | WALL "B" | (D) | - | - | DAMAGED 31' | - | - |

### CRACK REPAIR CHART

| MARK | LOCATION | REPAIR TYPE | GENERAL CRACKS (LF) | MAJOR CRACKS WIDTH (IN) | MAJOR CRACKS LENGTH (FT) | MAJOR CRACKS START PNT X | MAJOR CRACKS START PNT Y,Z | MAJOR CRACKS END PNT X | MAJOR CRACKS END PNT Y,Z | RATING |
|---|---|---|---|---|---|---|---|---|---|---|
| "GC-1" | WALL "A" | [*] | 5 | - | - | - | - | - | - | 9 |
| "GC-2" | FLOOR | [*] | 20 | - | - | - | - | - | - | 8 |
| "GC-3" | WALL "B" | [*] | 5 | - | - | - | - | - | - | 9 |

GRAPHIC SCALES:

0 1' 2' 4' 8' 12' 16'

3/16"=1'-0"

| REVISION NO. | DATE | REVISIONS | BY |
|---|---|---|---|

ARTHER R. DAR
LICENSED PROFESSIONAL ENGINEER
No. 7808-S
HAWAII U.S.A.
Exp. Date: 4-30-20

THIS WORK WAS PREPARED BY ME OR UNDER MY SUPERVISION AND CONSTRUCTION OF THIS PROJECT WILL BE UNDER MY OBSERVATION

DEPARTMENT OF HAWAIIAN HOMELAND

# NANAKULI FLOOD CONTROL CHANNEL IMPROVEMENTS NANAKULI VALLEY, OAHU HAWAII

## CHANNEL SEGMENT [098] REPAIR DETAILS

| | |
|---|---|
| DESIGNED BY: | TTP |
| DRAWN BY: | AK, AP, DL |
| CHECKED BY: | AD |
| SUPV: | |
| DATE: | 03/05/2019 |


HAWAII ENGINEERING GROUP, Inc.
Civil & Structural Engineers
1088 BISHOP STREET #2506
HONOLULU, HI 96813
Tel: 808-533-2092


JOB NO.

SHEET C098
107 OF 225 SHTS

FILE ___ DRAWER ___ ___ FOLDER ___ ___

Plot date: 15-Apr-2020

Full Size Plot

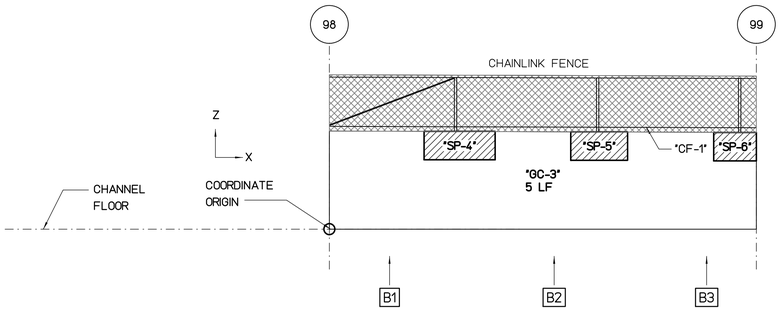


## WALL "B" FLATTEN VIEW

SCALE : 3/16" = 1'-0"

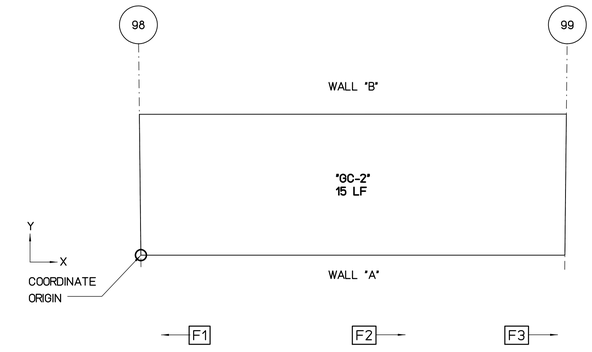


## FLOOR PLAN VIEW

SCALE : 3/16" = 1'-0"

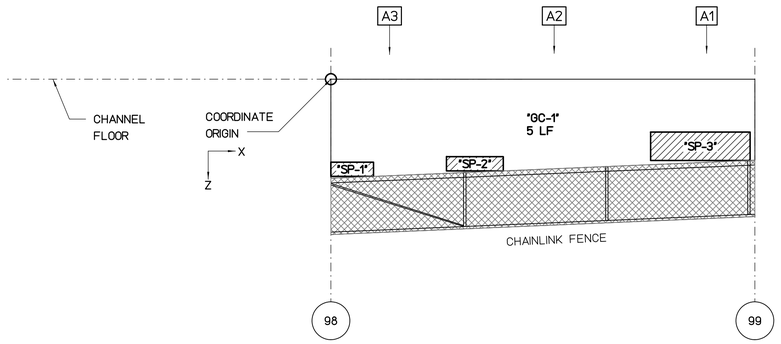


## WALL "A" FLATTEN VIEW

SCALE : 3/16" = 1'-0"

REPAIR LEGEND AND NOTES:

- 2 — CRACK AND SPALL REPAIR TYPES, SEE SHEETS SR201 AND SR202 FOR DETAILS. TYPE [*] INDICATES NO-REPAIR
- (A) — CHAINLINK FENCE REPAIR TYPES, SEE SHEETS SF201 AND SF202 FOR DETAILS
- 1.0 — TOP OF WALL LEANING DISTANCE TOWARD CHANNEL IN INCHES, SEE SHEETS SL101 TO SL207 FOR CONCRETE LINING

PHOTO LEGEND:

- A1 — WALL "A" ELEVATION PHOTO IDENTIFICATION SEE FLATTEN VIEW FOR PHOTO LOCATION
- B1 — WALL "B" ELEVATION PHOTO IDENTIFICATION SEE FLATTEN VIEW FOR PHOTO LOCATION
- F1 — CHANNEL FLOOR PHOTO IDENTIFICATION SEE FLOOR PLAN VIEW FOR PHOTO LOCATION

B1



B2



B3



F1



F2



F3



A1



A2



A3



### SPALL REPAIR CHART

| MARK | LOCATION | REPAIR TYPE | SPALL DIMENSION L | SPALL DIMENSION W | SPALL DIMENSION D | SPALL VOLUME | SPALL CENTER COORDINATE X | SPALL CENTER COORDINATE Y OR Z | RATING |
|---|---|---|---|---|---|---|---|---|---|
| "SP-1" | WALL "A" | 3 | 36 | 12 | 2 | 864 | 1.5 | 6.3 | 7 |
| "SP-2" | WALL "A" | 3 | 48 | 12 | 2 | 1152 | 10.1 | 6 | 7 |
| "SP-3" | WALL "A" | 3 | 84 | 24 | 2 | 4032 | 26 | 4.7 | 7 |
| "SP-4" | WALL "B" | 3 | 60 | 24 | 2 | 2880 | 9.2 | 5.9 | 7 |
| "SP-5" | WALL "B" | 3 | 48 | 24 | 2 | 2304 | 19 | 5.9 | 7 |
| "SP-6" | WALL "B" | 3 | 36 | 24 | 2 | 1728 | 28.6 | 5.8 | 7 |

### CHAINLINK FENCE REPAIR CHART

| MARK | LOCATION | REPAIR TYPE | POSTS | TOP RAIL | BOTTOM WIRE | BRACE | FABRIC |
|---|---|---|---|---|---|---|---|
| "CF-1" | WALL "B" | (D) | - | - | DAMAGED 30" | - | - |

### CRACK REPAIR CHART

| MARK | LOCATION | REPAIR TYPE | GENERAL CRACKS (LF) | MAJOR CRACKS WIDTH (IN) | MAJOR CRACKS LENGTH (FT) | MAJOR CRACKS START PNT X | MAJOR CRACKS START PNT Y,Z | MAJOR CRACKS END PNT X | MAJOR CRACKS END PNT Y,Z | RATING |
|---|---|---|---|---|---|---|---|---|---|---|
| "GC-1" | WALL "A" | * | 5 | - | - | - | - | - | - | 9 |
| "GC-2" | FLOOR | * | 15 | - | - | - | - | - | - | 8 |
| "GC-3" | WALL "B" | * | 5 | - | - | - | - | - | - | 9 |

GRAPHIC SCALES:

0 1' 2' 4' 8' 12' 16'

3/16"=1'-0"

| REVISION NO. | DATE | REVISIONS | BY |
|---|---|---|---|

ARTHER R. DAR
LICENSED PROFESSIONAL ENGINEER
No. 7808-S
HAWAII U.S.A.
Exp. Date: 4-30-20

THIS WORK WAS PREPARED BY ME OR UNDER MY SUPERVISION AND CONSTRUCTION OF THIS PROJECT WILL BE UNDER MY OBSERVATION

DEPARTMENT OF HAWAIIAN HOMELAND

# NANAKULI FLOOD CONTROL CHANNEL IMPROVEMENTS NANAKULI VALLEY, OAHU HAWAII

CHANNEL SEGMENT 099 REPAIR DETAILS

| | |
|---|---|
| DESIGNED BY: | TTP |
| DRAWN BY: | AK, AP, DL |
| CHECKED BY: | AD |
| SUPV: | |
| DATE: | 03/05/2019 |


HAWAII ENGINEERING GROUP, Inc.
Civil & Structural Engineers
1088 BISHOP STREET #2506
HONOLULU, HI 96813
Tel: 808-533-2092


JOB NO.

SHEET C099
108 OF 225 SHTS

FILE ___ DRAWER ___ ___ FOLDER ___ ___

Plot date: 15-Apr-2020

Full Size Plot

Plot date: 15-Apr-2020
Full Size Plot

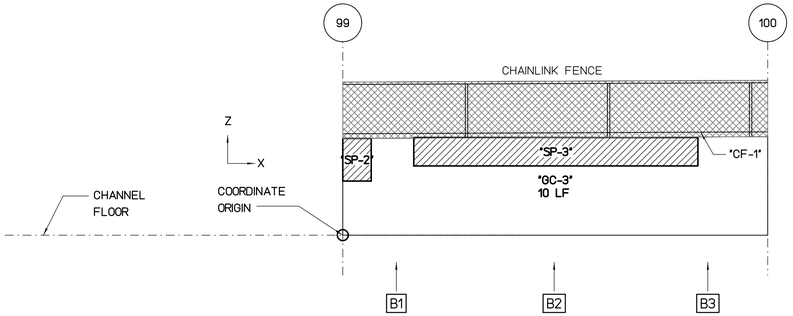


## WALL "B" FLATTEN VIEW

SCALE : 3/16" = 1'-0"

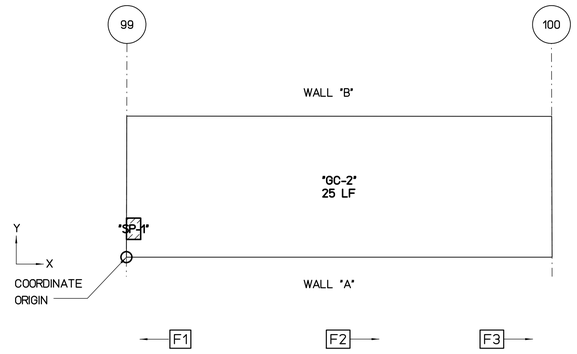


## FLOOR PLAN VIEW

SCALE : 3/16" = 1'-0"

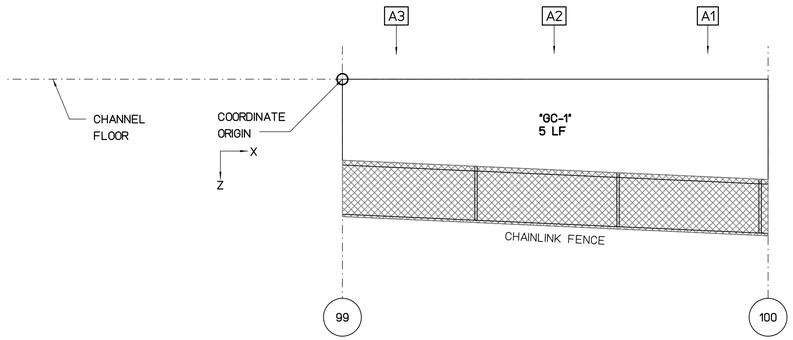


## WALL "A" FLATTEN VIEW

SCALE : 3/16" = 1'-0"

REPAIR LEGEND AND NOTES:

- [2] CRACK AND SPALL REPAIR TYPES, SEE SHEETS SR201 AND SR202 FOR DETAILS. TYPE [*] INDICATES NO-REPAIR
- (A) CHAINLINK FENCE REPAIR TYPES, SEE SHEETS SF201 AND SF202 FOR DETAILS
- 1.0> TOP OF WALL LEANING DISTANCE TOWARD CHANNEL IN INCHES, SEE SHEETS SL101 TO SL207 FOR CONCRETE LINING

PHOTO LEGEND:

- [A1] WALL "A" ELEVATION PHOTO IDENTIFICATION SEE FLATTEN VIEW FOR PHOTO LOCATION
- [B1] WALL "B" ELEVATION PHOTO IDENTIFICATION SEE FLATTEN VIEW FOR PHOTO LOCATION
- [F1] CHANNEL FLOOR PHOTO IDENTIFICATION SEE FLOOR PLAN VIEW FOR PHOTO LOCATION

B1



B2



B3



F1



F2



F3



A1



A2



A3



### SPALL REPAIR CHART

| MARK | LOCATION | REPAIR TYPE | SPALL DIMENSION L | SPALL DIMENSION W | SPALL DIMENSION D | SPALL VOLUME | SPALL CENTER COORDINATE X | SPALL CENTER COORDINATE Y OR Z | RATING |
|---|---|---|---|---|---|---|---|---|---|
| "SP-1" | FLOOR | [3] | 12 | 18 | 2 | 432 | 0.5 | 2 | 7 |
| "SP-2" | WALL "B" | [3] | 24 | 36 | 2 | 1728 | 1 | 5.3 | 7 |
| "SP-3" | WALL "B" | [3] | 240 | 24 | 2 | 11520 | 15 | 5.9 | 7 |

### CHAINLINK FENCE REPAIR CHART

| MARK | LOCATION | REPAIR TYPE | POSTS | TOP RAIL | BOTTOM WIRE | BRACE | FABRIC |
|---|---|---|---|---|---|---|---|
| "CF-1" | WALL "B" | (D) | - | - | DAMAGED 30" | - | - |

### CRACK REPAIR CHART

| MARK | LOCATION | REPAIR TYPE | GENERAL CRACKS (LF) | MAJOR CRACKS WIDTH (IN) | MAJOR CRACKS LENGTH (FT) | MAJOR CRACKS START PNT X | MAJOR CRACKS START PNT Y,Z | MAJOR CRACKS END PNT X | MAJOR CRACKS END PNT Y,Z | RATING |
|---|---|---|---|---|---|---|---|---|---|---|
| "GC-1" | WALL "A" | [*] | 5 | - | - | - | - | - | - | 9 |
| "GC-2" | FLOOR | [*] | 25 | - | - | - | - | - | - | 8 |
| "GC-3" | WALL "B" | [*] | 10 | - | - | - | - | - | - | 8 |

GRAPHIC SCALES:

0 1' 2' 4' 8' 12' 16'

3/16"=1'-0"

| REVISION NO. | DATE | REVISIONS | BY |
|---|---|---|---|

ATHER R. DAR
LICENSED PROFESSIONAL ENGINEER
No. 7808-S
HAWAII U.S.A.
Exp. Date: 4-30-20

THIS WORK WAS PREPARED BY ME OR UNDER MY SUPERVISION AND CONSTRUCTION OF THIS PROJECT WILL BE UNDER MY OBSERVATION

DEPARTMENT OF HAWAIIAN HOMELAND

# NANAKULI FLOOD CONTROL CHANNEL IMPROVEMENTS NANAKULI VALLEY, OAHU HAWAII

CHANNEL SEGMENT [100] REPAIR DETAILS

| | |
|---|---|
| DESIGNED BY: | TTP |
| DRAWN BY: | AK, AP, DL |
| CHECKED BY: | AD |
| SUPV: | |
| DATE: | 03/05/2019 |

HAWAII ENGINEERING GROUP, Inc.
Civil & Structural Engineers
1088 BISHOP STREET #2506
HONOLULU, HI 96813
Tel: 808-533-2092

JOB NO.

SHEET C100

109 OF 225 SHTS

FILE ___ DRAWER ___ ___ FOLDER ___ ___

Plot date: 15-Apr-2020
Full Size Plot

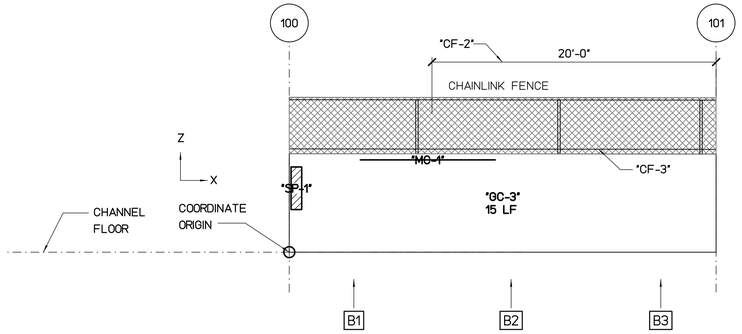


## WALL "B" FLATTEN VIEW

SCALE : 3/16" = 1'-0"

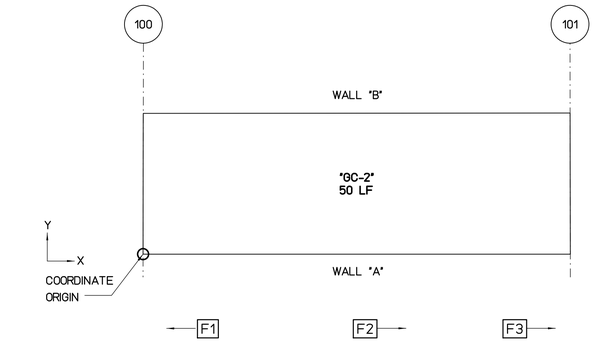


## FLOOR PLAN VIEW

SCALE : 3/16" = 1'-0"

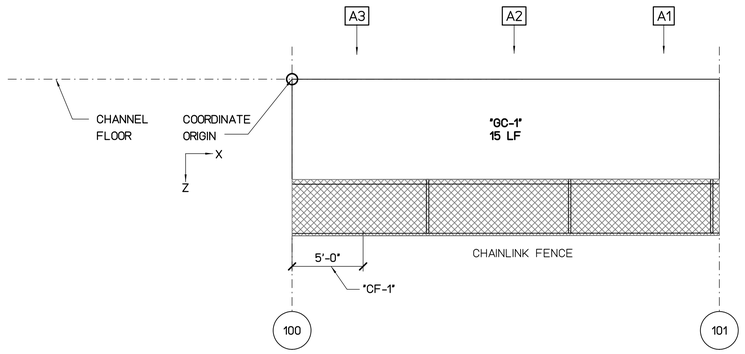


## WALL "A" FLATTEN VIEW

SCALE : 3/16" = 1'-0"

REPAIR LEGEND AND NOTES:

- [2] CRACK AND SPALL REPAIR TYPES, SEE SHEETS SR201 AND SR202 FOR DETAILS. TYPE [*] INDICATES NO-REPAIR
- (A) CHAINLINK FENCE REPAIR TYPES, SEE SHEETS SF201 AND SF202 FOR DETAILS
- 1.0> TOP OF WALL LEANING DISTANCE TOWARD CHANNEL IN INCHES, SEE SHEETS SL101 TO SL207 FOR CONCRETE LINING

PHOTO LEGEND:

- [A1] WALL "A" ELEVATION PHOTO IDENTIFICATION SEE FLATTEN VIEW FOR PHOTO LOCATION
- [B1] WALL "B" ELEVATION PHOTO IDENTIFICATION SEE FLATTEN VIEW FOR PHOTO LOCATION
- [F1] CHANNEL FLOOR PHOTO IDENTIFICATION SEE FLOOR PLAN VIEW FOR PHOTO LOCATION

B1



B2



B3



F1



F2



F3



A1



A2



A3



### SPALL REPAIR CHART

| MARK | LOCATION | REPAIR TYPE | SPALL DIMENSION | | | SPALL VOLUME | SPALL CENTER COORDINATE | | RATING |
|---|---|---|---|---|---|---|---|---|---|
| | | | L | W | D | | X | Y OR Z | |
| "SP-1" | WALL "B" | 3 | 9 | 36 | 2 | 648 | 0.5 | 4.5 | 7 |

### CHAINLINK FENCE REPAIR CHART

| MARK | LOCATION | REPAIR TYPE | POSTS | TOP RAIL | BOTTOM WIRE | BRACE | FABRIC |
|---|---|---|---|---|---|---|---|
| "CF-1" | WALL "A" | E | - | - | - | - | DAMAGED 5'x4' |
| "CF-2" | WALL "B" | E | - | - | - | - | DAMAGED 20'x4' |
| "CF-3" | WALL "B" | D | - | - | DAMAGED 30' | - | - |

### CRACK REPAIR CHART

| MARK | LOCATION | REPAIR TYPE | GENERAL CRACKS (LF) | MAJOR CRACKS | | | | | | RATING |
|---|---|---|---|---|---|---|---|---|---|---|
| | | | | WIDTH (IN) | LENGTH (FT) | START PNT X | START PNT Y,Z | END PNT X | END PNT Y,Z | |
| "MC-1" | WALL "B" | 1 | - | 6.5 | 10 | 5 | 6.5 | 14.5 | 6.5 | 7 |
| "GC-1" | WALL "A" | * | 15 | - | - | - | - | - | - | 8 |
| "GC-2" | FLOOR | * | 50 | - | - | - | - | - | - | 8 |
| "GC-3" | WALL "B" | * | 15 | - | - | - | - | - | - | 8 |

GRAPHIC SCALES:

0 1' 2' 4' 8' 12' 16'

3/16"=1'-0"

| REVISION NO. | DATE | REVISIONS | BY |
|---|---|---|---|

ATHER R. DAR
LICENSED PROFESSIONAL ENGINEER
No. 7808-S
HAWAII U.S.A.

Exp. Date: 4-30-20

THIS WORK WAS PREPARED BY ME OR UNDER MY SUPERVISION AND CONSTRUCTION OF THIS PROJECT WILL BE UNDER MY OBSERVATION

DEPARTMENT OF HAWAIIAN HOMELAND

# NANAKULI FLOOD CONTROL CHANNEL IMPROVEMENTS NANAKULI VALLEY, OAHU HAWAII

CHANNEL SEGMENT [101] REPAIR DETAILS

| | |
|---|---|
| DESIGNED BY: | TTP |
| DRAWN BY: | AK, AP, DL |
| CHECKED BY: | AD |
| SUPV: | |
| DATE: | 03/05/2019 |

HAWAII ENGINEERING GROUP, Inc.
Civil & Structural Engineers
1088 BISHOP STREET #2506
HONOLULU, HI 96813
Tel: 808-533-2092

JOB NO.

SHEET C101

110 OF 225 SHTS

FILE ___ DRAWER ___ ___ FOLDER ___ ___

Plot date: 15-Apr-2020
Full Size Plot

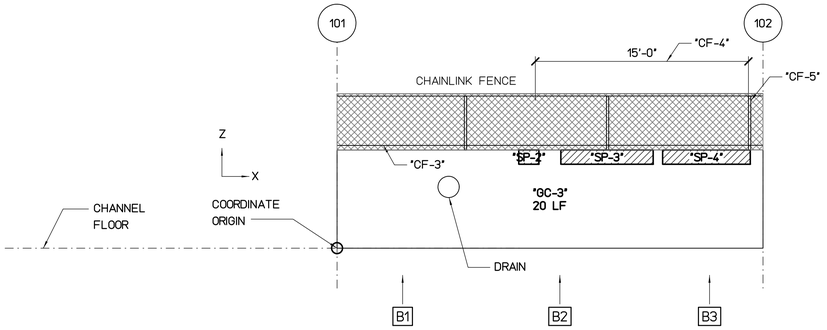


## WALL "B" FLATTEN VIEW

SCALE : 3/16" = 1'-0"

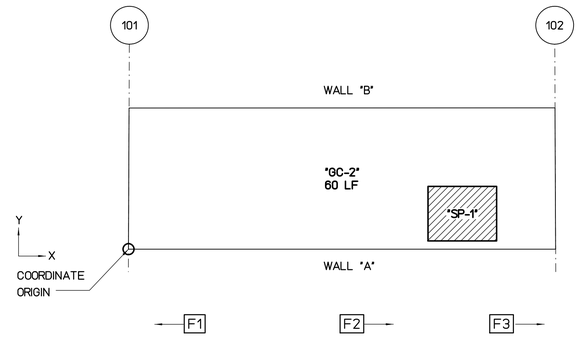


## FLOOR PLAN VIEW

SCALE : 3/16" = 1'-0"

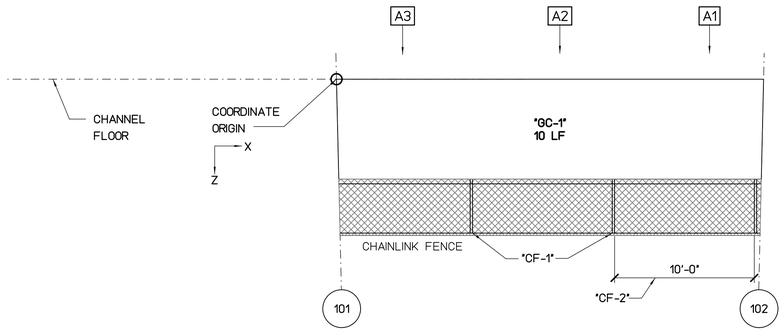


## WALL "A" FLATTEN VIEW

SCALE : 3/16" = 1'-0"

REPAIR LEGEND AND NOTES:

- 2 — CRACK AND SPALL REPAIR TYPES, SEE SHEETS SR201 AND SR202 FOR DETAILS. TYPE [*] INDICATES NO-REPAIR
- (A) — CHAINLINK FENCE REPAIR TYPES, SEE SHEETS SF201 AND SF202 FOR DETAILS
- 1.0 — TOP OF WALL LEANING DISTANCE TOWARD CHANNEL IN INCHES, SEE SHEETS SL101 TO SL207 FOR CONCRETE LINING

PHOTO LEGEND:

- A1 — WALL "A" ELEVATION PHOTO IDENTIFICATION SEE FLATTEN VIEW FOR PHOTO LOCATION
- B1 — WALL "B" ELEVATION PHOTO IDENTIFICATION SEE FLATTEN VIEW FOR PHOTO LOCATION
- F1 — CHANNEL FLOOR PHOTO IDENTIFICATION SEE FLOOR PLAN VIEW FOR PHOTO LOCATION

B1



B2



B3



F1



F2



F3



A1



A2



A3



### SPALL REPAIR CHART

| MARK | LOCATION | REPAIR TYPE | SPALL DIMENSION L | SPALL DIMENSION W | SPALL DIMENSION D | SPALL VOLUME | SPALL CENTER COORDINATE X | SPALL CENTER COORDINATE Y OR Z | RATING |
|---|---|---|---|---|---|---|---|---|---|
| "SP-1" | FLOOR | 3 | 58 | 46 | 2 | 5336 | 23.5 | 2.5 | 7 |
| "SP-2" | WALL "B" | 3 | 17 | 12 | 2 | 408 | 13.5 | 6.4 | 7 |
| "SP-3" | WALL "B" | 3 | 78 | 12 | 2 | 1872 | 19 | 6.4 | 7 |
| "SP-4" | WALL "B" | 3 | 74 | 12 | 2 | 1776 | 26 | 6.4 | 7 |

### CHAINLINK FENCE REPAIR CHART

| MARK | LOCATION | REPAIR TYPE | POSTS | TOP RAIL | BOTTOM WIRE | BRACE | FABRIC |
|---|---|---|---|---|---|---|---|
| "CF-1" | WALL "A" | (A) | BENT 2 | - | - | - | - |
| "CF-2" | WALL "A" | (C) | - | BENT 10' | - | - | - |
| "CF-3" | WALL "B" | (D) | - | - | DAMAGED 30' | - | - |
| "CF-4" | WALL "B" | (E) | - | - | - | - | DAMAGED 15'x4' |
| "CF-5" | WALL "B" | (A) | BENT 1 | - | - | - | - |

### CRACK REPAIR CHART

| MARK | LOCATION | REPAIR TYPE | GENERAL CRACKS (LF) | MAJOR CRACKS WIDTH (IN) | MAJOR CRACKS LENGTH (FT) | MAJOR CRACKS START PNT X | MAJOR CRACKS START PNT Y,Z | MAJOR CRACKS END PNT X | MAJOR CRACKS END PNT Y,Z | RATING |
|---|---|---|---|---|---|---|---|---|---|---|
| "GC-1" | WALL "A" | * | 10 | - | - | - | - | - | - | 8 |
| "GC-2" | FLOOR | * | 60 | - | - | - | - | - | - | 8 |
| "GC-3" | WALL "B" | * | 20 | - | - | - | - | - | - | 8 |

GRAPHIC SCALES:

0 1' 2' 4' 8' 12' 16'

3/16"=1'-0"

| REVISION NO. | DATE | REVISIONS | BY |
|---|---|---|---|

ATHER R. DAR
LICENSED PROFESSIONAL ENGINEER
No. 7808-S
HAWAII U.S.A.
Exp. Date: 4-30-20

THIS WORK WAS PREPARED BY ME OR UNDER MY SUPERVISION AND CONSTRUCTION OF THIS PROJECT WILL BE UNDER MY OBSERVATION

DEPARTMENT OF HAWAIIAN HOMELAND

# NANAKULI FLOOD CONTROL CHANNEL IMPROVEMENTS NANAKULI VALLEY, OAHU HAWAII

## CHANNEL SEGMENT 102 REPAIR DETAILS

| | |
|---|---|
| DESIGNED BY: | TTP |
| DRAWN BY: | AK, AP, DL |
| CHECKED BY: | AD |
| SUPV: | |
| DATE: | 03/05/2019 |

HAWAII ENGINEERING GROUP, Inc.
Civil & Structural Engineers
1088 BISHOP STREET #2506
HONOLULU, HI 96813
Tel: 808-533-2092

JOB NO.

SHEET C102
111 OF 225 SHTS

FILE ___ DRAWER ___ ___ FOLDER ___ ___

Plot date: 15-Apr-2020
Full Size Plot

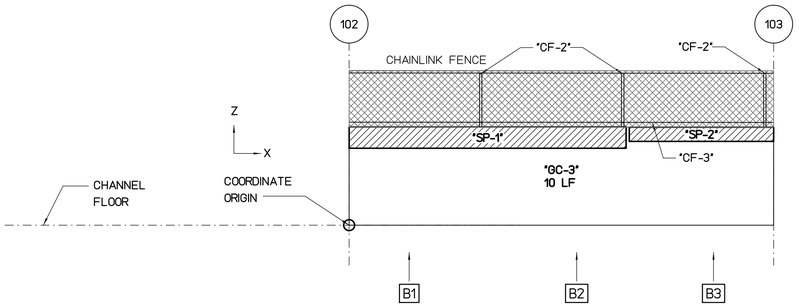


## WALL "B" FLATTEN VIEW

SCALE : 3/16" = 1'-0"

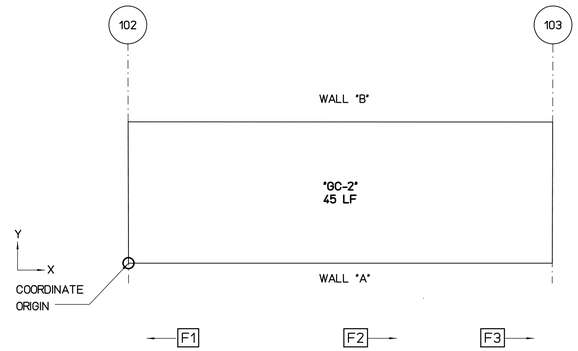


## FLOOR PLAN VIEW

SCALE : 3/16" = 1'-0"

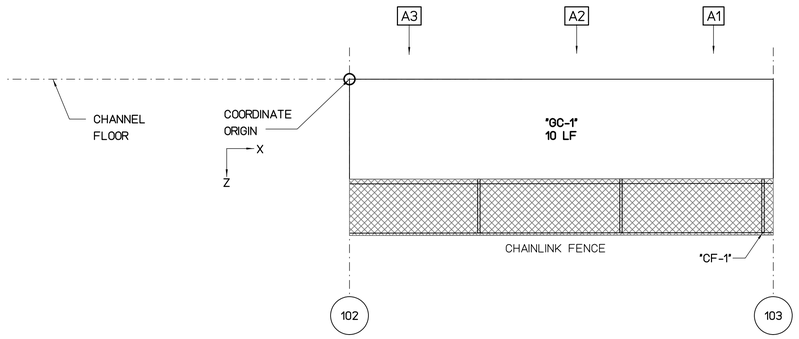


## WALL "A" FLATTEN VIEW

SCALE : 3/16" = 1'-0"

REPAIR LEGEND AND NOTES:

- 2 — CRACK AND SPALL REPAIR TYPES, SEE SHEETS SR201 AND SR202 FOR DETAILS. TYPE [*] INDICATES NO-REPAIR
- (A) — CHAINLINK FENCE REPAIR TYPES, SEE SHEETS SF201 AND SF202 FOR DETAILS
- 1.0 — TOP OF WALL LEANING DISTANCE TOWARD CHANNEL IN INCHES, SEE SHEETS SL101 TO SL207 FOR CONCRETE LINING

PHOTO LEGEND:

- A1 — WALL "A" ELEVATION PHOTO IDENTIFICATION SEE FLATTEN VIEW FOR PHOTO LOCATION
- B1 — WALL "B" ELEVATION PHOTO IDENTIFICATION SEE FLATTEN VIEW FOR PHOTO LOCATION
- F1 — CHANNEL FLOOR PHOTO IDENTIFICATION SEE FLOOR PLAN VIEW FOR PHOTO LOCATION

B1



B2



B3



F1

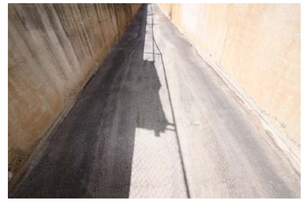

F2



F3



A1



A2



A3



### SPALL REPAIR CHART

| MARK | LOCATION | REPAIR TYPE | SPALL DIMENSION L | SPALL DIMENSION W | SPALL DIMENSION D | SPALL VOLUME | SPALL CENTER COORDINATE X | SPALL CENTER COORDINATE Y OR Z | RATING |
|---|---|---|---|---|---|---|---|---|---|
| "SP-1" | WALL "B" | 3 | 234 | 18 | 2 | 8424 | 9.8 | 6.2 | 7 |
| "SP-2" | WALL "B" | 3 | 122 | 12 | 2 | 2928 | 24.8 | 6.4 | 7 |

### CHAINLINK FENCE REPAIR CHART

| MARK | LOCATION | REPAIR TYPE | POSTS | TOP RAIL | BOTTOM WIRE | BRACE | FABRIC |
|---|---|---|---|---|---|---|---|
| "CF-1" | WALL "A" | (A) | BENT 1 | - | - | - | - |
| "CF-2" | WALL "B" | (A) | BENT 3 | - | - | - | - |
| "CF-3" | WALL "B" | (D) | - | - | DAMAGED 30' | - | - |

### CRACK REPAIR CHART

| MARK | LOCATION | REPAIR TYPE | GENERAL CRACKS (LF) | MAJOR CRACKS WIDTH (IN) | MAJOR CRACKS LENGTH (FT) | MAJOR CRACKS START PNT X | MAJOR CRACKS START PNT Y,Z | MAJOR CRACKS END PNT X | MAJOR CRACKS END PNT Y,Z | RATING |
|---|---|---|---|---|---|---|---|---|---|---|
| "GC-1" | WALL "A" | * | 10 | - | - | - | - | - | - | 8 |
| "GC-2" | FLOOR | * | 45 | - | - | - | - | - | - | 8 |
| "GC-3" | WALL "B" | * | 10 | - | - | - | - | - | - | 8 |

GRAPHIC SCALES:

0 1' 2' 4' 8' 12' 16'

3/16"=1'-0"

| REVISION NO. | DATE | REVISIONS | BY |
|---|---|---|---|

ATHER R. DAR
LICENSED PROFESSIONAL ENGINEER
No. 7808-S
HAWAII U.S.A.
Exp. Date: 4-30-20

THIS WORK WAS PREPARED BY ME OR UNDER MY SUPERVISION AND CONSTRUCTION OF THIS PROJECT WILL BE UNDER MY OBSERVATION

DEPARTMENT OF HAWAIIAN HOMELAND

# NANAKULI FLOOD CONTROL CHANNEL IMPROVEMENTS NANAKULI VALLEY, OAHU HAWAII

## CHANNEL SEGMENT 103 REPAIR DETAILS

| | |
|---|---|
| DESIGNED BY: | TTP |
| DRAWN BY: | AK, AP, DL |
| CHECKED BY: | AD |
| SUPV: | |
| DATE: | 03/05/2019 |

HAWAII ENGINEERING GROUP, Inc.
Civil & Structural Engineers
1088 BISHOP STREET #2506
HONOLULU, HI 96813
Tel: 808-533-2092

JOB NO.

SHEET C103
112 OF 225 SHTS

FILE ___ DRAWER ___ ___ FOLDER ___ ___

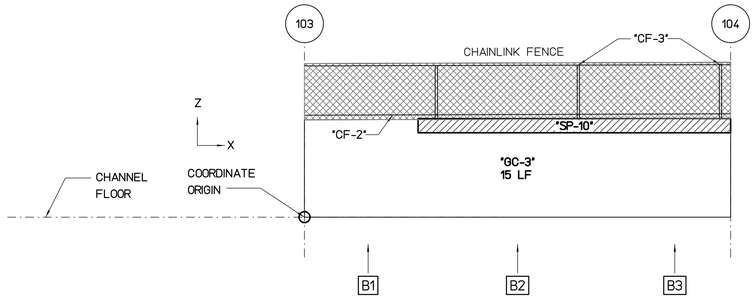


## WALL "B" FLATTEN VIEW

SCALE : 3/16" = 1'-0"

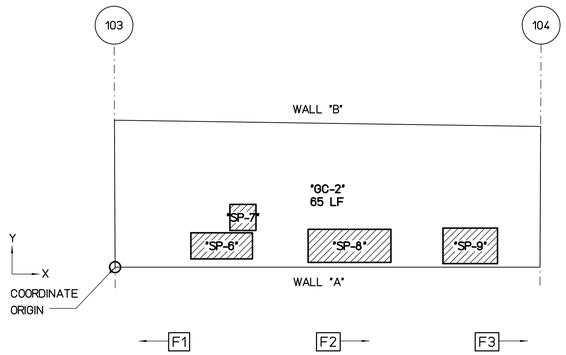


## FLOOR PLAN VIEW

SCALE : 3/16" = 1'-0"

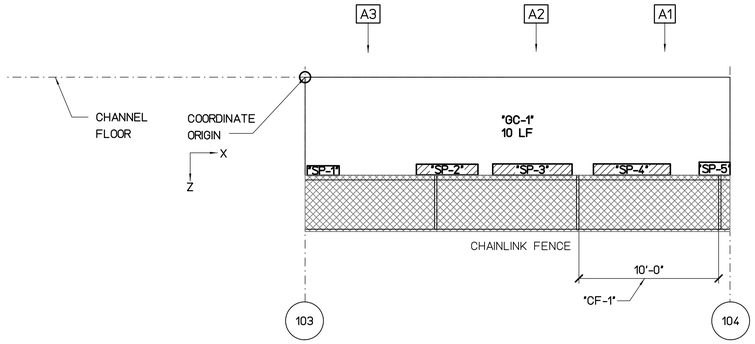


## WALL "A" FLATTEN VIEW

SCALE : 3/16" = 1'-0"

REPAIR LEGEND AND NOTES:

- [2] CRACK AND SPALL REPAIR TYPES, SEE SHEETS SR201 AND SR202 FOR DETAILS. TYPE [*] INDICATES NO-REPAIR
- (A) CHAINLINK FENCE REPAIR TYPES, SEE SHEETS SF201 AND SF202 FOR DETAILS
- [1.0] TOP OF WALL LEANING DISTANCE TOWARD CHANNEL IN INCHES, SEE SHEETS SL101 TO SL207 FOR CONCRETE LINING

PHOTO LEGEND:

- [A1] WALL "A" ELEVATION PHOTO IDENTIFICATION SEE FLATTEN VIEW FOR PHOTO LOCATION
- [B1] WALL "B" ELEVATION PHOTO IDENTIFICATION SEE FLATTEN VIEW FOR PHOTO LOCATION
- [F1] CHANNEL FLOOR PHOTO IDENTIFICATION SEE FLOOR PLAN VIEW FOR PHOTO LOCATION

B1




B2




B3




F1



F2



F3




A1



A2



A3



### SPALL REPAIR CHART

| MARK | LOCATION | REPAIR TYPE | SPALL DIMENSION L | SPALL DIMENSION W | SPALL DIMENSION D | SPALL VOLUME | SPALL CENTER COORDINATE X | SPALL CENTER COORDINATE Y OR Z | RATING |
|---|---|---|---|---|---|---|---|---|---|
| "SP-1" | WALL "A" | [3] | 27 | 8 | 2 | 432 | 1.3 | 6.6 | 7 |
| "SP-2" | WALL "A" | [3] | 52 | 9 | 2 | 936 | 10 | 6.5 | 7 |
| "SP-3" | WALL "A" | [3] | 67 | 9 | 2 | 1273 | 16 | 6.5 | 7 |
| "SP-4" | WALL "A" | [3] | 65 | 9 | 2 | 1235 | 23 | 6.5 | 7 |
| "SP-5" | WALL "A" | [3] | 26 | 11 | 2 | 572 | 28.8 | 6.4 | 7 |
| "SP-6" | FLOOR | [3] | 52 | 22 | 2 | 2288 | 7.5 | 1.5 | 7 |
| "SP-7" | FLOOR | [3] | 22 | 22 | 2 | 968 | 9 | 3.5 | 7 |
| "SP-8" | FLOOR | [3] | 70 | 28 | 2 | 3920 | 16.5 | 1.5 | 7 |
| "SP-9" | FLOOR | [3] | 46 | 30 | 2 | 2760 | 25 | 1.5 | 7 |
| "SP-10" | WALL "B" | [3] | 264 | 12 | 2 | 6336 | 19 | 6.4 | 7 |

### CHAINLINK FENCE REPAIR CHART

| MARK | LOCATION | REPAIR TYPE | POSTS | TOP RAIL | BOTTOM WIRE | BRACE | FABRIC |
|---|---|---|---|---|---|---|---|
| "CF-1" | WALL "A" | (E) | - | - | - | - | DAMAGED 10'x4' |
| "CF-2" | WALL "B" | (D) | - | - | DAMAGED 30' | - | - |
| "CF-3" | WALL "B" | (A) | BENT 2 | - | - | - | - |

### CRACK REPAIR CHART

| MARK | LOCATION | REPAIR TYPE | GENERAL CRACKS (LF) | MAJOR CRACKS WIDTH (IN) | MAJOR CRACKS LENGTH (FT) | MAJOR CRACKS START PNT X | MAJOR CRACKS START PNT Y,Z | MAJOR CRACKS END PNT X | MAJOR CRACKS END PNT Y,Z | RATING |
|---|---|---|---|---|---|---|---|---|---|---|
| "GC-1" | WALL "A" | [*] | 10 | - | - | - | - | - | - | 8 |
| "GC-2" | FLOOR | [*] | 65 | - | - | - | - | - | - | 8 |
| "GC-3" | WALL "B" | [*] | 15 | - | - | - | - | - | - | 8 |

GRAPHIC SCALES:

0 1' 2' 4' 8' 12' 16'

3/16"=1'-0"

| REVISION NO. | DATE | REVISIONS | BY |
|---|---|---|---|
| | | | |

ATHER R. DAR
LICENSED PROFESSIONAL ENGINEER
No. 7808-S
HAWAII U.S.A.

Exp. Date: 4-30-20

THIS WORK WAS PREPARED BY ME OR UNDER MY SUPERVISION AND CONSTRUCTION OF THIS PROJECT WILL BE UNDER MY OBSERVATION

DEPARTMENT OF HAWAIIAN HOMELAND

# NANAKULI FLOOD CONTROL CHANNEL IMPROVEMENTS NANAKULI VALLEY, OAHU HAWAII

## CHANNEL SEGMENT [104] REPAIR DETAILS

| | |
|---|---|
| DESIGNED BY: | TTP |
| DRAWN BY: | AK, AP, DL |
| CHECKED BY: | AD |
| SUPV: | |
| DATE: | 03/05/2019 |


HAWAII ENGINEERING GROUP, Inc.
Civil & Structural Engineers
1088 BISHOP STREET #2506
HONOLULU, HI 96813
Tel: 808-533-2092


JOB NO.

SHEET C104

113 OF 225 SHTS

FILE ___ ___ DRAWER ___ ___ ___ FOLDER ___ ___

Plot date: 15-Apr-2020

Full Size Plot

Plot date: 15-Apr-2020
Full Size Plot

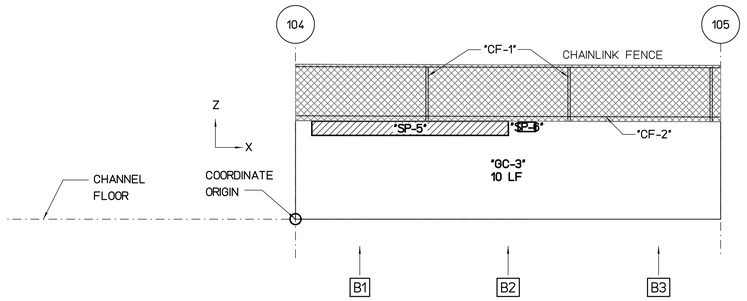


## WALL "B" FLATTEN VIEW

SCALE : 3/16" = 1'-0"

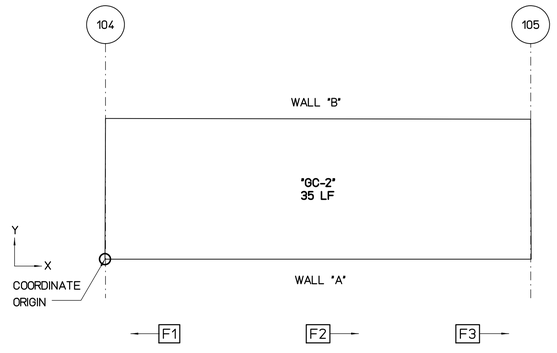


## FLOOR PLAN VIEW

SCALE : 3/16" = 1'-0"

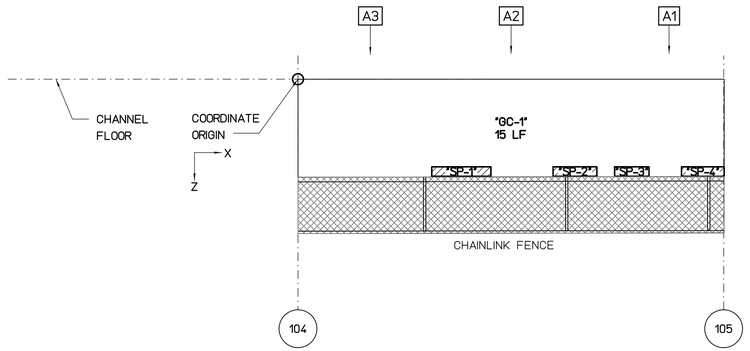


## WALL "A" FLATTEN VIEW

SCALE : 3/16" = 1'-0"

REPAIR LEGEND AND NOTES:

- [2] CRACK AND SPALL REPAIR TYPES, SEE SHEETS SR201 AND SR202 FOR DETAILS. TYPE [*] INDICATES NO-REPAIR
- (A) CHAINLINK FENCE REPAIR TYPES, SEE SHEETS SF201 AND SF202 FOR DETAILS
- 1.0 TOP OF WALL LEANING DISTANCE TOWARD CHANNEL IN INCHES, SEE SHEETS SL101 TO SL207 FOR CONCRETE LINING

PHOTO LEGEND:

- A1 WALL "A" ELEVATION PHOTO IDENTIFICATION SEE FLATTEN VIEW FOR PHOTO LOCATION
- B1 WALL "B" ELEVATION PHOTO IDENTIFICATION SEE FLATTEN VIEW FOR PHOTO LOCATION
- F1 CHANNEL FLOOR PHOTO IDENTIFICATION SEE FLOOR PLAN VIEW FOR PHOTO LOCATION

B1



B2



B3



F1



F2



F3



A1



A2



A3



### SPALL REPAIR CHART

| MARK | LOCATION | REPAIR TYPE | SPALL DIMENSION L | SPALL DIMENSION W | SPALL DIMENSION D | SPALL VOLUME | SPALL CENTER COORDINATE X | SPALL CENTER COORDINATE Y OR Z | RATING |
|---|---|---|---|---|---|---|---|---|---|
| "SP-1" | WALL "A" | 3 | 50 | 8 | 2 | 800 | 11.5 | 6.5 | 7 |
| "SP-2" | WALL "A" | 3 | 37 | 8 | 2 | 592 | 19.5 | 6.5 | 7 |
| "SP-3" | WALL "A" | 3 | 29 | 8 | 2 | 464 | 23.5 | 6.5 | 7 |
| "SP-4" | WALL "A" | 3 | 36 | 8 | 2 | 576 | 28.5 | 6.5 | 7 |
| "SP-5" | WALL "B" | 3 | 166 | 12 | 2 | 3984 | 8.1 | 6.4 | 7 |
| "SP-6" | WALL "B" | 3 | 15 | 8 | 2 | 240 | 16.3 | 6.5 | 7 |

### CHAINLINK FENCE REPAIR CHART

| MARK | LOCATION | REPAIR TYPE | POSTS | TOP RAIL | BOTTOM WIRE | BRACE | FABRIC |
|---|---|---|---|---|---|---|---|
| "CF-1" | WALL "B" | (A) | BENT 2 | - | - | - | - |
| "CF-2" | WALL "B" | (D) | - | - | DAMAGED 30' | - | - |

### CRACK REPAIR CHART

| MARK | LOCATION | REPAIR TYPE | GENERAL CRACKS (LF) | MAJOR CRACKS WIDTH (IN) | MAJOR CRACKS LENGTH (FT) | MAJOR CRACKS START PNT X | MAJOR CRACKS START PNT Y,Z | MAJOR CRACKS END PNT X | MAJOR CRACKS END PNT Y,Z | RATING |
|---|---|---|---|---|---|---|---|---|---|---|
| "GC-1" | WALL "A" | * | 15 | - | - | - | - | - | - | 8 |
| "GC-2" | FLOOR | * | 35 | - | - | - | - | - | - | 8 |
| "GC-3" | WALL "B" | * | 10 | - | - | - | - | - | - | 8 |

GRAPHIC SCALES:

0 1' 2' 4' 8' 12' 16'

3/16"=1'-0"

| REVISION NO. | DATE | REVISIONS | BY |
|---|---|---|---|

ATHER R. DAR
LICENSED PROFESSIONAL ENGINEER
No. 7808-S
HAWAII U.S.A.
Exp. Date: 4-30-20

THIS WORK WAS PREPARED BY ME OR UNDER MY SUPERVISION AND CONSTRUCTION OF THIS PROJECT WILL BE UNDER MY OBSERVATION

DEPARTMENT OF HAWAIIAN HOMELAND

# NANAKULI FLOOD CONTROL CHANNEL IMPROVEMENTS NANAKULI VALLEY, OAHU HAWAII

## CHANNEL SEGMENT 105 REPAIR DETAILS

| | |
|---|---|
| DESIGNED BY: | TTP |
| DRAWN BY: | AK, AP, DL |
| CHECKED BY: | AD |
| SUPV: | |
| DATE: | 03/05/2019 |

HAWAII ENGINEERING GROUP, Inc.
Civil & Structural Engineers
1088 BISHOP STREET #2506
HONOLULU, HI 96813
Tel: 808-533-2092

JOB NO.

SHEET C105

114 OF 225 SHTS

FILE ___ DRAWER ___ ___ FOLDER ___ ___

Plot date: 15-Apr-2020
Full Size Plot

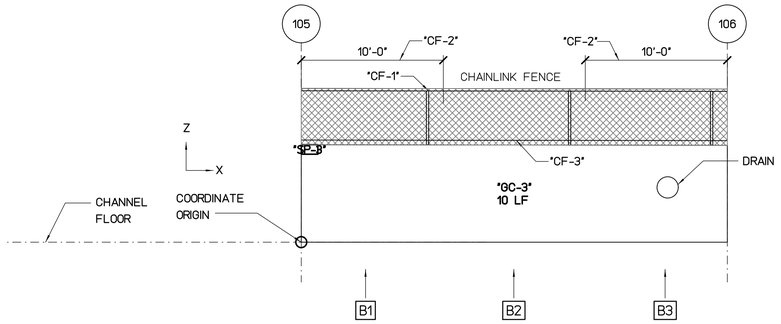


## WALL "B" FLATTEN VIEW

SCALE : 3/16" = 1'-0"

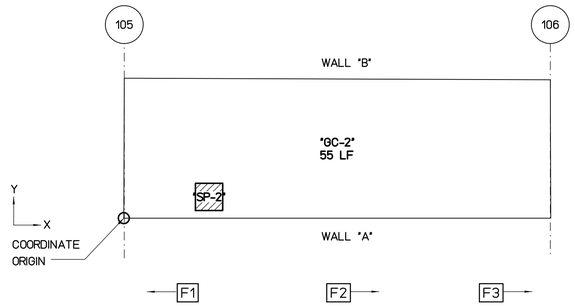


## FLOOR PLAN VIEW

SCALE : 3/16" = 1'-0"

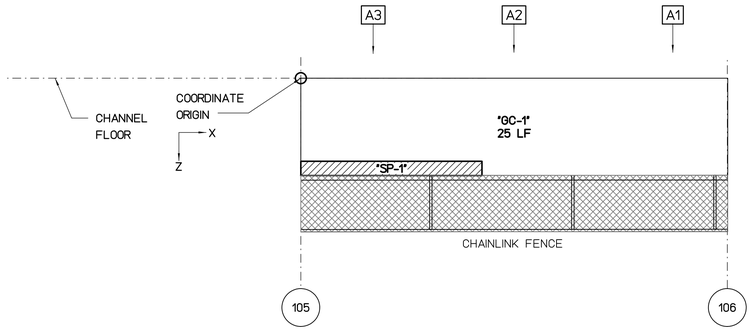


## WALL "A" FLATTEN VIEW

SCALE : 3/16" = 1'-0"

REPAIR LEGEND AND NOTES:

- 2 — CRACK AND SPALL REPAIR TYPES, SEE SHEETS SR201 AND SR202 FOR DETAILS. TYPE [*] INDICATES NO-REPAIR
- (A) — CHAINLINK FENCE REPAIR TYPES, SEE SHEETS SF201 AND SF202 FOR DETAILS
- 1.0 — TOP OF WALL LEANING DISTANCE TOWARD CHANNEL IN INCHES, SEE SHEETS SL101 TO SL207 FOR CONCRETE LINING

PHOTO LEGEND:

- A1 — WALL "A" ELEVATION PHOTO IDENTIFICATION SEE FLATTEN VIEW FOR PHOTO LOCATION
- B1 — WALL "B" ELEVATION PHOTO IDENTIFICATION SEE FLATTEN VIEW FOR PHOTO LOCATION
- F1 — CHANNEL FLOOR PHOTO IDENTIFICATION SEE FLOOR PLAN VIEW FOR PHOTO LOCATION

B1



B2



B3



F1



F2



F3



A1



A2



A3



### SPALL REPAIR CHART

| MARK | LOCATION | REPAIR TYPE | SPALL DIMENSION L | SPALL DIMENSION W | SPALL DIMENSION D | SPALL VOLUME | SPALL CENTER COORDINATE X | SPALL CENTER COORDINATE Y OR Z | RATING |
|---|---|---|---|---|---|---|---|---|---|
| "SP-1" | WALL "A" | 3 | 153 | 12 | 2 | 3672 | 6.4 | 6.3 | 7 |
| "SP-2" | FLOOR | 3 | 23 | 23 | 2 | 1058 | 6 | 1.5 | 7 |
| "SP-3" | WALL "B" | 3 | 14 | 8 | 2 | 224 | 0.6 | 6.5 | 7 |

### CHAINLINK FENCE REPAIR CHART

| MARK | LOCATION | REPAIR TYPE | POSTS | TOP RAIL | BOTTOM WIRE | BRACE | FABRIC |
|---|---|---|---|---|---|---|---|
| "CF-1" | WALL "B" | (A) | BENT 1 | - | - | - | - |
| "CF-2" | WALL "B" | (E) | - | - | - | - | DAMAGED 20'x4' |
| "CF-3" | WALL "B" | (D) | - | - | DAMAGED 30' | - | - |

### CRACK REPAIR CHART

| MARK | LOCATION | REPAIR TYPE | GENERAL CRACKS (LF) | MAJOR CRACKS WIDTH (IN) | MAJOR CRACKS LENGTH (FT) | MAJOR CRACKS START PNT X | MAJOR CRACKS START PNT Y,Z | MAJOR CRACKS END PNT X | MAJOR CRACKS END PNT Y,Z | RATING |
|---|---|---|---|---|---|---|---|---|---|---|
| "GC-1" | WALL "A" | * | 25 | - | - | - | - | - | - | 8 |
| "GC-2" | FLOOR | * | 55 | - | - | - | - | - | - | 8 |
| "GC-3" | WALL "B" | * | 10 | - | - | - | - | - | - | 8 |

GRAPHIC SCALES:

0 1' 2' 4' 8' 12' 16'

3/16"=1'-0"

| REVISION NO. | DATE | REVISIONS | BY |
|---|---|---|---|

ATHER R. DAR
LICENSED PROFESSIONAL ENGINEER
No. 7808-S
HAWAII U.S.A.
Exp. Date: 4-30-20

THIS WORK WAS PREPARED BY ME OR UNDER MY SUPERVISION AND CONSTRUCTION OF THIS PROJECT WILL BE UNDER MY OBSERVATION

DEPARTMENT OF HAWAIIAN HOMELAND

# NANAKULI FLOOD CONTROL CHANNEL IMPROVEMENTS NANAKULI VALLEY, OAHU HAWAII

CHANNEL SEGMENT 106 REPAIR DETAILS

| | |
|---|---|
| DESIGNED BY: | TTP |
| DRAWN BY: | AK, AP, DL |
| CHECKED BY: | AD |
| SUPV: | |
| DATE: | 03/05/2019 |

HAWAII ENGINEERING GROUP, Inc.
Civil & Structural Engineers
1088 BISHOP STREET #2506
HONOLULU, HI 96813
Tel: 808-533-2092

JOB NO.

SHEET C106

175 OF 225 SHTS

FILE ___ DRAWER ___ ___ FOLDER ___ ___

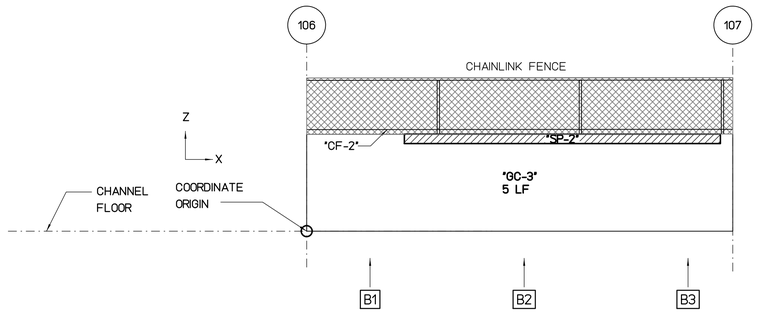


## WALL "B" FLATTEN VIEW

SCALE : 3/16" = 1'-0"

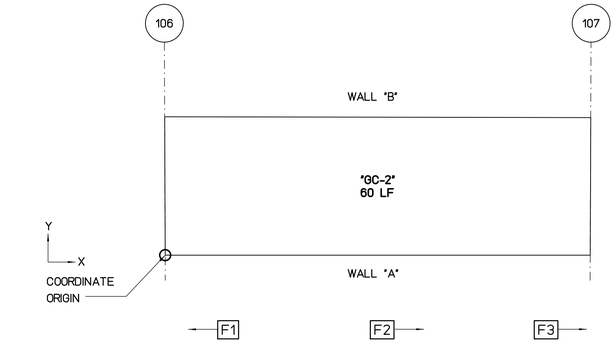


## FLOOR PLAN VIEW

SCALE : 3/16" = 1'-0"

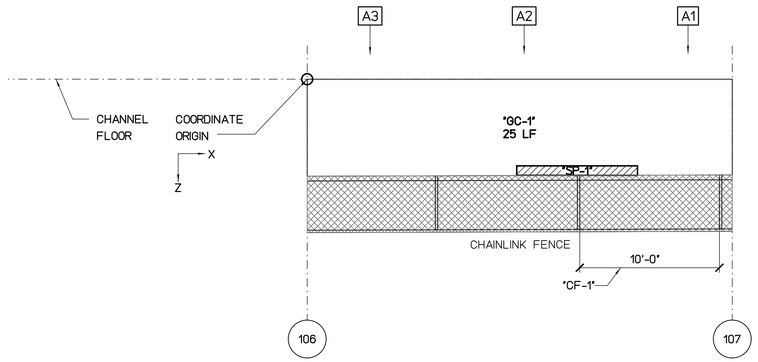


## WALL "A" FLATTEN VIEW

SCALE : 3/16" = 1'-0"

REPAIR LEGEND AND NOTES:

- 2 — CRACK AND SPALL REPAIR TYPES, SEE SHEETS SR201 AND SR202 FOR DETAILS. TYPE [*] INDICATES NO-REPAIR
- (A) — CHAINLINK FENCE REPAIR TYPES, SEE SHEETS SF201 AND SF202 FOR DETAILS
- 1.0 — TOP OF WALL LEANING DISTANCE TOWARD CHANNEL IN INCHES, SEE SHEETS SL101 TO SL207 FOR CONCRETE LINING

PHOTO LEGEND:

- A1 — WALL "A" ELEVATION PHOTO IDENTIFICATION SEE FLATTEN VIEW FOR PHOTO LOCATION
- B1 — WALL "B" ELEVATION PHOTO IDENTIFICATION SEE FLATTEN VIEW FOR PHOTO LOCATION
- F1 — CHANNEL FLOOR PHOTO IDENTIFICATION SEE FLOOR PLAN VIEW FOR PHOTO LOCATION

B1



B2



B3



F1



F2



F3



A1



A2



A3



### SPALL REPAIR CHART

| MARK | LOCATION | REPAIR TYPE | SPALL DIMENSION L | SPALL DIMENSION W | SPALL DIMENSION D | SPALL VOLUME | SPALL CENTER COORDINATE X | SPALL CENTER COORDINATE Y OR Z | RATING |
|---|---|---|---|---|---|---|---|---|---|
| "SP-1" | WALL "A" | 3 | 102 | 8 | 2 | 1632 | 19 | 6.4 | 7 |
| "SP-2" | WALL "B" | 3 | 267 | 8 | 2 | 4272 | 18 | 6.5 | 7 |

### CHAINLINK FENCE REPAIR CHART

| MARK | LOCATION | REPAIR TYPE | POSTS | TOP RAIL | BOTTOM WIRE | BRACE | FABRIC |
|---|---|---|---|---|---|---|---|
| "CF-1" | WALL "A" | (E) | - | - | - | - | DAMAGED 10'x4' |
| "CF-2" | WALL "B" | (D) | - | - | DAMAGED 30' | - | - |

### CRACK REPAIR CHART

| MARK | LOCATION | REPAIR TYPE | GENERAL CRACKS (LF) | MAJOR CRACKS WIDTH (IN) | MAJOR CRACKS LENGTH (FT) | MAJOR CRACKS START PNT X | MAJOR CRACKS START PNT Y,Z | MAJOR CRACKS END PNT X | MAJOR CRACKS END PNT Y,Z | RATING |
|---|---|---|---|---|---|---|---|---|---|---|
| "GC-1" | WALL "A" | * | 25 | - | - | - | - | - | - | 8 |
| "GC-2" | FLOOR | * | 60 | - | - | - | - | - | - | 8 |
| "GC-3" | WALL "B" | * | 5 | - | - | - | - | - | - | 9 |

GRAPHIC SCALES:

0 1' 2' 4' 8' 12' 16'

3/16"=1'-0"

| REVISION NO. | DATE | REVISIONS | BY |
|---|---|---|---|

ATHER R. DAR — LICENSED PROFESSIONAL ENGINEER — No. 7808-S — HAWAII U.S.A.

Exp. Date: 4-30-20

THIS WORK WAS PREPARED BY ME OR UNDER MY SUPERVISION AND CONSTRUCTION OF THIS PROJECT WILL BE UNDER MY OBSERVATION

DEPARTMENT OF HAWAIIAN HOMELAND

# NANAKULI FLOOD CONTROL CHANNEL IMPROVEMENTS NANAKULI VALLEY, OAHU HAWAII

CHANNEL SEGMENT 107 REPAIR DETAILS

| | |
|---|---|
| DESIGNED BY: | TTP |
| DRAWN BY: | AK, AP, DL |
| CHECKED BY: | AD |
| SUPV: | |
| DATE: | 03/05/2019 |


HAWAII ENGINEERING GROUP, Inc.
Civil & Structural Engineers
1088 BISHOP STREET #2506
HONOLULU, HI 96813
Tel: 808-533-2092


JOB NO.

SHEET C107

1½ OF 225 SHTS

FILE ___ DRAWER ___ ___ FOLDER ___ ___

Plot date: 15-Apr-2020

Full Size Plot

Plot date: 15-Apr-2020
Full Size Plot

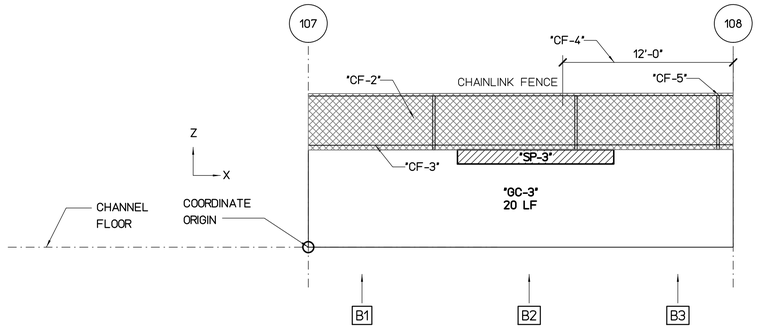


## WALL "B" FLATTEN VIEW

SCALE : 3/16" = 1'-0"

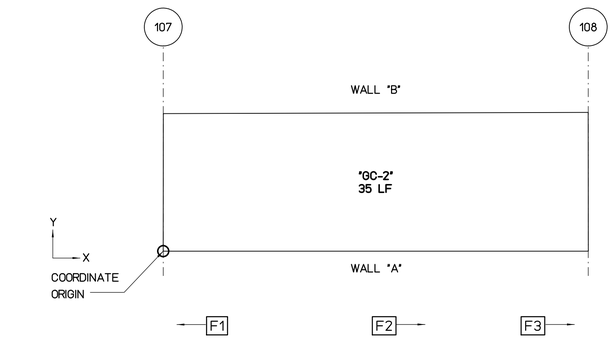


## FLOOR PLAN VIEW

SCALE : 3/16" = 1'-0"

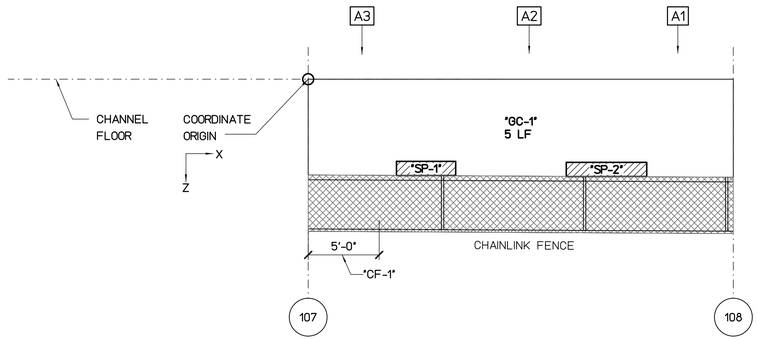


## WALL "A" FLATTEN VIEW

SCALE : 3/16" = 1'-0"

REPAIR LEGEND AND NOTES:

- 2 — CRACK AND SPALL REPAIR TYPES, SEE SHEETS SR201 AND SR202 FOR DETAILS. TYPE [*] INDICATES NO-REPAIR
- (A) — CHAINLINK FENCE REPAIR TYPES, SEE SHEETS SF201 AND SF202 FOR DETAILS
- 1.0 — TOP OF WALL LEANING DISTANCE TOWARD CHANNEL IN INCHES, SEE SHEETS SL101 TO SL207 FOR CONCRETE LINING

PHOTO LEGEND:

- A1 — WALL "A" ELEVATION PHOTO IDENTIFICATION SEE FLATTEN VIEW FOR PHOTO LOCATION
- B1 — WALL "B" ELEVATION PHOTO IDENTIFICATION SEE FLATTEN VIEW FOR PHOTO LOCATION
- F1 — CHANNEL FLOOR PHOTO IDENTIFICATION SEE FLOOR PLAN VIEW FOR PHOTO LOCATION

B1



B2



B3



F1



F2



F3



A1



A2



A3



### SPALL REPAIR CHART

| MARK | LOCATION | REPAIR TYPE | SPALL DIMENSION L | SPALL DIMENSION W | SPALL DIMENSION D | SPALL VOLUME | SPALL CENTER COORDINATE X | SPALL CENTER COORDINATE Y OR Z | RATING |
|---|---|---|---|---|---|---|---|---|---|
| "SP-1" | WALL "A" | 3 | 50 | 12 | 2 | 1200 | 8.3 | 6.3 | 7 |
| "SP-2" | WALL "A" | 3 | 68 | 12 | 2 | 1632 | 21 | 6.4 | 7 |
| "SP-3" | WALL "B" | 3 | 132 | 12 | 2 | 3168 | 16 | 6.4 | 7 |

### CHAINLINK FENCE REPAIR CHART

| MARK | LOCATION | REPAIR TYPE | POSTS | TOP RAIL | BOTTOM WIRE | BRACE | FABRIC |
|---|---|---|---|---|---|---|---|
| "CF-1" | WALL "A" | (E) | - | - | - | - | DAMAGED 5'x4' |
| "CF-2" | WALL "B" | (E) | - | - | - | - | DAMAGED 30'x4' |
| "CF-3" | WALL "B" | (D) | - | - | DAMAGED 30' | - | - |
| "CF-4" | WALL "B" | (C) | - | BENT 12' | - | - | - |
| "CF-5" | WALL "B" | (A) | BENT 1 | - | - | - | - |

### CRACK REPAIR CHART

| MARK | LOCATION | REPAIR TYPE | GENERAL CRACKS (LF) | MAJOR CRACKS WIDTH (IN) | MAJOR CRACKS LENGTH (FT) | MAJOR CRACKS START PNT X | MAJOR CRACKS START PNT Y,Z | MAJOR CRACKS END PNT X | MAJOR CRACKS END PNT Y,Z | RATING |
|---|---|---|---|---|---|---|---|---|---|---|
| "GC-1" | WALL "A" | [*] | 5 | - | - | - | - | - | - | 9 |
| "GC-2" | FLOOR | [*] | 35 | - | - | - | - | - | - | 8 |
| "GC-3" | WALL "B" | [*] | 20 | - | - | - | - | - | - | 8 |

GRAPHIC SCALES:

0 1' 2' 4' 8' 12' 16'

3/16"=1'-0"

| REVISION NO. | DATE | REVISIONS | BY |
|---|---|---|---|

ATHER R. DAR
LICENSED PROFESSIONAL ENGINEER
No. 7808-S
HAWAII U.S.A.
Exp. Date: 4-30-20

THIS WORK WAS PREPARED BY ME OR UNDER MY SUPERVISION AND CONSTRUCTION OF THIS PROJECT WILL BE UNDER MY OBSERVATION

DEPARTMENT OF HAWAIIAN HOMELAND

# NANAKULI FLOOD CONTROL CHANNEL IMPROVEMENTS NANAKULI VALLEY, OAHU HAWAII

CHANNEL SEGMENT 108 REPAIR DETAILS

| | |
|---|---|
| DESIGNED BY: | TTP |
| DRAWN BY: | AK, AP, DL |
| CHECKED BY: | AD |
| SUPV: | |
| DATE: | 03/05/2019 |

HAWAII ENGINEERING GROUP, Inc.
Civil & Structural Engineers
1088 BISHOP STREET #2506
HONOLULU, HI 96813
Tel: 808-533-2092

JOB NO.

SHEET C108
117 OF 225 SHTS

FILE ___ DRAWER ___ ___ FOLDER ___ ___

Plot date: 15-Apr-2020
Full Size Plot

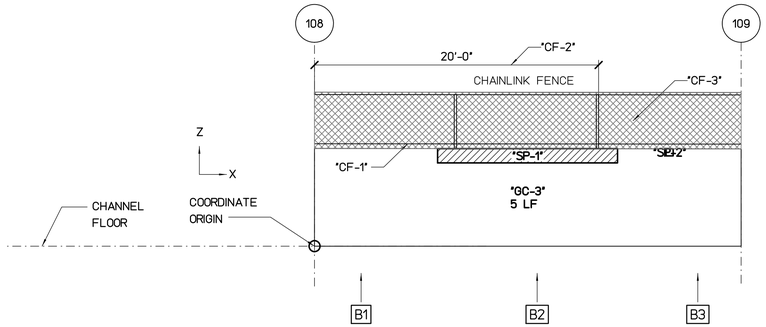


## WALL "B" FLATTEN VIEW

SCALE : 3/16" = 1'-0"

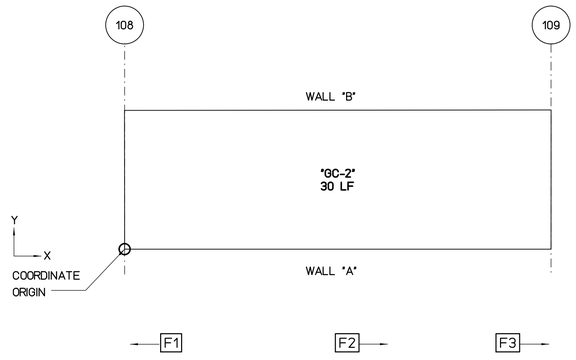


## FLOOR PLAN VIEW

SCALE : 3/16" = 1'-0"

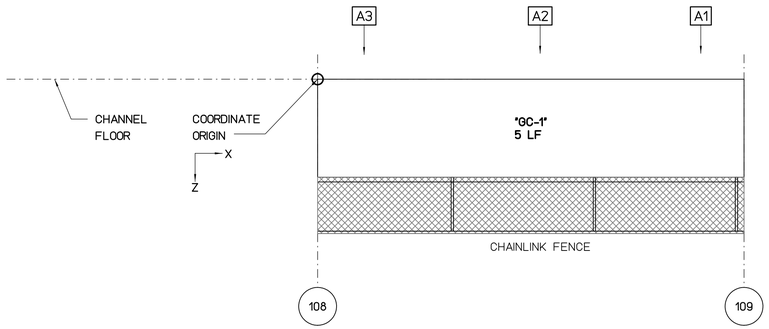


## WALL "A" FLATTEN VIEW

SCALE : 3/16" = 1'-0"

REPAIR LEGEND AND NOTES:

- 2 — CRACK AND SPALL REPAIR TYPES, SEE SHEETS SR201 AND SR202 FOR DETAILS. TYPE ⊠ INDICATES NO-REPAIR
- Ⓐ — CHAINLINK FENCE REPAIR TYPES, SEE SHEETS SF201 AND SF202 FOR DETAILS
- 1.0 — TOP OF WALL LEANING DISTANCE TOWARD CHANNEL IN INCHES, SEE SHEETS SL101 TO SL207 FOR CONCRETE LINING

PHOTO LEGEND:

- A1 — WALL "A" ELEVATION PHOTO IDENTIFICATION SEE FLATTEN VIEW FOR PHOTO LOCATION
- B1 — WALL "B" ELEVATION PHOTO IDENTIFICATION SEE FLATTEN VIEW FOR PHOTO LOCATION
- F1 — CHANNEL FLOOR PHOTO IDENTIFICATION SEE FLOOR PLAN VIEW FOR PHOTO LOCATION

B1



B2



B3



F1



F2



F3



A1



A2



A3



### SPALL REPAIR CHART

| MARK | LOCATION | REPAIR TYPE | SPALL DIMENSION L | SPALL DIMENSION W | SPALL DIMENSION D | SPALL VOLUME | SPALL CENTER COORDINATE X | SPALL CENTER COORDINATE Y OR Z | RATING |
|---|---|---|---|---|---|---|---|---|---|
| "SP-1" | WALL "B" | 3 | 152 | 12 | 2 | 3648 | 15 | 6.5 | 7 |
| "SP-2" | WALL "B" | 3 | 6 | 6 | 2 | 72 | 25 | 7 | 6 |

### CHAINLINK FENCE REPAIR CHART

| MARK | LOCATION | REPAIR TYPE | POSTS | TOP RAIL | BOTTOM WIRE | BRACE | FABRIC |
|---|---|---|---|---|---|---|---|
| "CF-1" | WALL "B" | Ⓓ | - | - | DAMAGED 30' | - | - |
| "CF-2" | WALL "B" | Ⓒ | - | BENT 20' | - | - | - |
| "CF-3" | WALL "B" | Ⓔ | - | - | - | - | DAMAGED 30'x4' |

### CRACK REPAIR CHART

| MARK | LOCATION | REPAIR TYPE | GENERAL CRACKS (LF) | MAJOR CRACKS WIDTH (IN) | MAJOR CRACKS LENGTH (FT) | MAJOR CRACKS START PNT X | MAJOR CRACKS START PNT Y,Z | MAJOR CRACKS END PNT X | MAJOR CRACKS END PNT Y,Z | RATING |
|---|---|---|---|---|---|---|---|---|---|---|
| "GC-1" | WALL "A" | ⊠ | 5 | - | - | - | - | - | - | 9 |
| "GC-2" | FLOOR | ⊠ | 30 | - | - | - | - | - | - | 8 |
| "GC-3" | WALL "B" | ⊠ | 5 | - | - | - | - | - | - | 9 |

GRAPHIC SCALES:

0 1' 2' 4' 8' 12' 16'

3/16"=1'-0"

| REVISION NO. | DATE | REVISIONS | BY |
|---|---|---|---|

ATHER R. DAR
LICENSED PROFESSIONAL ENGINEER
No. 7808-S
HAWAII U.S.A.
Exp. Date: 4-30-20

THIS WORK WAS PREPARED BY ME OR UNDER MY SUPERVISION AND CONSTRUCTION OF THIS PROJECT WILL BE UNDER MY OBSERVATION

DEPARTMENT OF HAWAIIAN HOMELAND

# NANAKULI FLOOD CONTROL CHANNEL IMPROVEMENTS NANAKULI VALLEY, OAHU HAWAII

## CHANNEL SEGMENT 109 REPAIR DETAILS

| | |
|---|---|
| DESIGNED BY: | TTP |
| DRAWN BY: | AK, AP, DL |
| CHECKED BY: | AD |
| SUPV: | |
| DATE: | 03/05/2019 |

HAWAII ENGINEERING GROUP, Inc.
Civil & Structural Engineers
1088 BISHOP STREET #2506
HONOLULU, HI 96813
Tel: 808-533-2092

JOB NO.

SHEET C109

118 OF 225 SHTS

FILE ___ DRAWER ___ ___ FOLDER ___ ___

Plot date: 15-Apr-2020
Full Size Plot

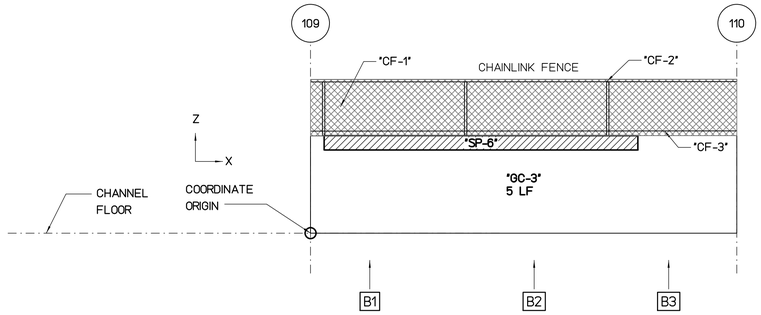


## WALL "B" FLATTEN VIEW

SCALE : 3/16" = 1'-0"

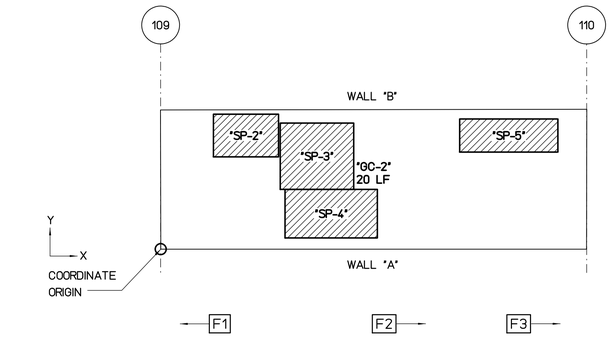


## FLOOR PLAN VIEW

SCALE : 3/16" = 1'-0"

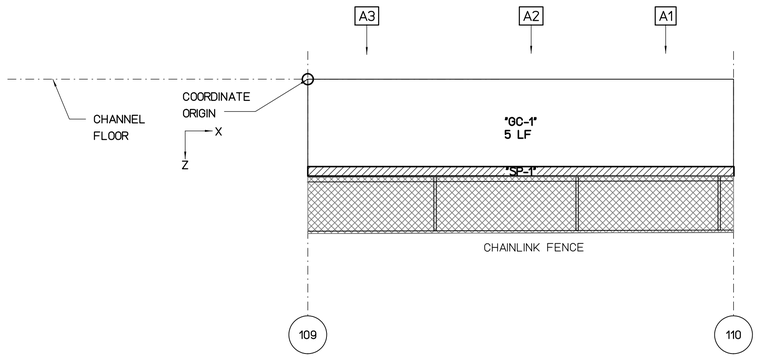


## WALL "A" FLATTEN VIEW

SCALE : 3/16" = 1'-0"

REPAIR LEGEND AND NOTES:

- 2 — CRACK AND SPALL REPAIR TYPES, SEE SHEETS SR201 AND SR202 FOR DETAILS. TYPE [*] INDICATES NO-REPAIR
- (A) — CHAINLINK FENCE REPAIR TYPES, SEE SHEETS SF201 AND SF202 FOR DETAILS
- 1.0 — TOP OF WALL LEANING DISTANCE TOWARD CHANNEL IN INCHES, SEE SHEETS SL101 TO SL207 FOR CONCRETE LINING

PHOTO LEGEND:

- A1 — WALL "A" ELEVATION PHOTO IDENTIFICATION SEE FLATTEN VIEW FOR PHOTO LOCATION
- B1 — WALL "B" ELEVATION PHOTO IDENTIFICATION SEE FLATTEN VIEW FOR PHOTO LOCATION
- F1 — CHANNEL FLOOR PHOTO IDENTIFICATION SEE FLOOR PLAN VIEW FOR PHOTO LOCATION

B1



B2



B3



F1



F2



F3



A1



A2



A3



### SPALL REPAIR CHART

| MARK | LOCATION | REPAIR TYPE | SPALL DIMENSION L | SPALL DIMENSION W | SPALL DIMENSION D | SPALL VOLUME | SPALL CENTER COORDINATE X | SPALL CENTER COORDINATE Y OR Z | RATING |
|---|---|---|---|---|---|---|---|---|---|
| "SP-1" | WALL "A" | 3 | 360 | 8 | 2 | 5760 | 15 | 6.5 | 6 |
| "SP-2" | FLOOR | 3 | 55 | 36 | 2 | 3960 | 6 | 8 | 7 |
| "SP-3" | FLOOR | 3 | 62 | 56 | 2 | 6944 | 11 | 6.5 | 7 |
| "SP-4" | FLOOR | 3 | 78 | 41 | 2 | 6396 | 12 | 2.5 | 7 |
| "SP-5" | FLOOR | 3 | 83 | 28 | 2 | 4648 | 24.5 | 8 | 7 |
| "SP-6" | WALL "B" | 3 | 265 | 12 | 2 | 6360 | 12 | 6.4 | 7 |

### CHAINLINK FENCE REPAIR CHART

| MARK | LOCATION | REPAIR TYPE | POSTS | TOP RAIL | BOTTOM WIRE | BRACE | FABRIC |
|---|---|---|---|---|---|---|---|
| "CF-1" | WALL "B" | (E) | - | - | - | - | DAMAGED 30'x4' |
| "CF-2" | WALL "B" | (A) | BENT 1 | - | - | - | - |
| "CF-3" | WALL "B" | (D) | - | - | DAMAGED 30' | - | - |

### CRACK REPAIR CHART

| MARK | LOCATION | REPAIR TYPE | GENERAL CRACKS (LF) | MAJOR CRACKS WIDTH (IN) | MAJOR CRACKS LENGTH (FT) | MAJOR CRACKS START PNT X | MAJOR CRACKS START PNT Y,Z | MAJOR CRACKS END PNT X | MAJOR CRACKS END PNT Y,Z | RATING |
|---|---|---|---|---|---|---|---|---|---|---|
| "GC-1" | WALL "A" | * | 5 | - | - | - | - | - | - | 9 |
| "GC-2" | FLOOR | * | 20 | - | - | - | - | - | - | 8 |
| "GC-3" | WALL "B" | * | 5 | - | - | - | - | - | - | 9 |

GRAPHIC SCALES:

0 1' 2' 4' 8' 12' 16'

3/16"=1'-0"

| REVISION NO. | DATE | REVISIONS | BY |
|---|---|---|---|
| | | | |

ATHER R. DAR
LICENSED PROFESSIONAL ENGINEER
No. 7808-S
HAWAII U.S.A.
Exp. Date: 4-30-20

THIS WORK WAS PREPARED BY ME OR UNDER MY SUPERVISION AND CONSTRUCTION OF THIS PROJECT WILL BE UNDER MY OBSERVATION

DEPARTMENT OF HAWAIIAN HOMELAND

# NANAKULI FLOOD CONTROL CHANNEL IMPROVEMENTS NANAKULI VALLEY, OAHU HAWAII

CHANNEL SEGMENT 110 REPAIR DETAILS

| | |
|---|---|
| DESIGNED BY: | TTP |
| DRAWN BY: | AK, AP, DL |
| CHECKED BY: | AD |
| SUPV: | |
| DATE: | 03/05/2019 |

HAWAII ENGINEERING GROUP, Inc.
Civil & Structural Engineers
1088 BISHOP STREET #2506
HONOLULU, HI 96813
Tel: 808-533-2092

JOB NO.

SHEET C110

119 OF 225 SHTS

FILE ___ DRAWER ___ ___ FOLDER ___ ___

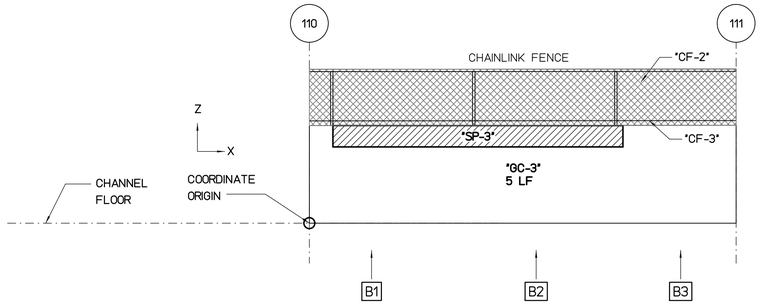


## WALL "B" FLATTEN VIEW

SCALE : 3/16" = 1'-0"

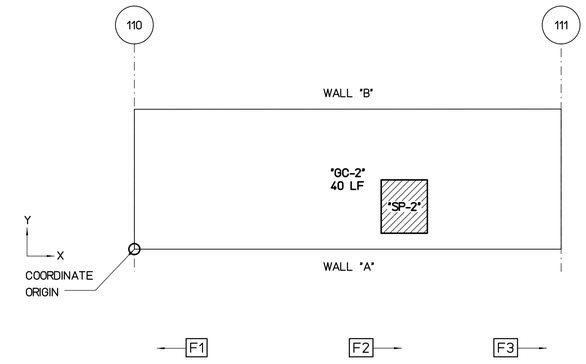


## FLOOR PLAN VIEW

SCALE : 3/16" = 1'-0"

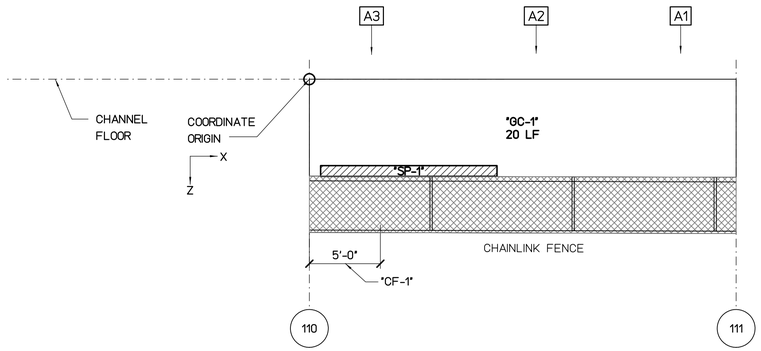


## WALL "A" FLATTEN VIEW

SCALE : 3/16" = 1'-0"

REPAIR LEGEND AND NOTES:

- 2 — CRACK AND SPALL REPAIR TYPES, SEE SHEETS SR201 AND SR202 FOR DETAILS. TYPE [*] INDICATES NO-REPAIR
- (A) — CHAINLINK FENCE REPAIR TYPES, SEE SHEETS SF201 AND SF202 FOR DETAILS
- 1.0 — TOP OF WALL LEANING DISTANCE TOWARD CHANNEL IN INCHES, SEE SHEETS SL101 TO SL207 FOR CONCRETE LINING

PHOTO LEGEND:

- A1 — WALL "A" ELEVATION PHOTO IDENTIFICATION SEE FLATTEN VIEW FOR PHOTO LOCATION
- B1 — WALL "B" ELEVATION PHOTO IDENTIFICATION SEE FLATTEN VIEW FOR PHOTO LOCATION
- F1 — CHANNEL FLOOR PHOTO IDENTIFICATION SEE FLOOR PLAN VIEW FOR PHOTO LOCATION

B1



B2



B3



F1

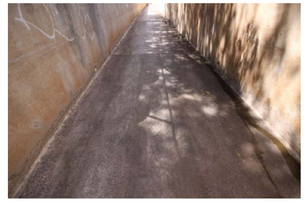

F2



F3



A1



A2



A3



### SPALL REPAIR CHART

| MARK | LOCATION | REPAIR TYPE | SPALL DIMENSION L | SPALL DIMENSION W | SPALL DIMENSION D | SPALL VOLUME | SPALL CENTER COORDINATE X | SPALL CENTER COORDINATE Y OR Z | RATING |
|---|---|---|---|---|---|---|---|---|---|
| "SP-1" | WALL "A" | 3 | 149 | 9 | 2 | 2682 | 7 | 6.5 | 7 |
| "SP-2" | FLOOR | 3 | 39 | 45 | 2 | 3510 | 19 | 3 | 6 |
| "SP-3" | WALL "B" | 3 | 245 | 18 | 2 | 8820 | 11.9 | 6.1 | 7 |

### CHAINLINK FENCE REPAIR CHART

| MARK | LOCATION | REPAIR TYPE | POSTS | TOP RAIL | BOTTOM WIRE | BRACE | FABRIC |
|---|---|---|---|---|---|---|---|
| "CF-1" | WALL "A" | (E) | - | - | - | - | DAMAGED 5'x4' |
| "CF-2" | WALL "B" | (E) | - | - | - | - | DAMAGED 30'x4' |
| "CF-3" | WALL "B" | (D) | - | - | DAMAGED 30' | - | - |

### CRACK REPAIR CHART

| MARK | LOCATION | REPAIR TYPE | GENERAL CRACKS (LF) | MAJOR CRACKS WIDTH (IN) | MAJOR CRACKS LENGTH (FT) | MAJOR CRACKS START PNT X | MAJOR CRACKS START PNT Y,Z | MAJOR CRACKS END PNT X | MAJOR CRACKS END PNT Y,Z | RATING |
|---|---|---|---|---|---|---|---|---|---|---|
| "GC-1" | WALL "A" | * | 20 | - | - | - | - | - | - | 8 |
| "GC-2" | FLOOR | * | 40 | - | - | - | - | - | - | 8 |
| "GC-3" | WALL "B" | * | 5 | - | - | - | - | - | - | 9 |

GRAPHIC SCALES:

0 1' 2' 4' 8' 12' 16'

3/16"=1'-0"

| REVISION NO. | DATE | REVISIONS | BY |
|---|---|---|---|

ATHER R. DAR
LICENSED PROFESSIONAL ENGINEER
No. 7808-S
HAWAII U.S.A.

Exp. Date: 4-30-20

THIS WORK WAS PREPARED BY ME OR UNDER MY SUPERVISION AND CONSTRUCTION OF THIS PROJECT WILL BE UNDER MY OBSERVATION

DEPARTMENT OF HAWAIIAN HOMELAND

# NANAKULI FLOOD CONTROL CHANNEL IMPROVEMENTS NANAKULI VALLEY, OAHU HAWAII

CHANNEL SEGMENT 111 REPAIR DETAILS

| | |
|---|---|
| DESIGNED BY: | TTP |
| DRAWN BY: | AK, AP, DL |
| CHECKED BY: | AD |
| SUPV: | |
| DATE: | 03/05/2019 |


HAWAII ENGINEERING GROUP, Inc.
Civil & Structural Engineers
1088 BISHOP STREET #2506
HONOLULU, HI 96813
Tel: 808-533-2092


JOB NO.

SHEET C111

120 OF 225 SHTS

FILE ___ DRAWER ___ ___ FOLDER ___ ___

Plot date: 15-Apr-2020

Full Size Plot

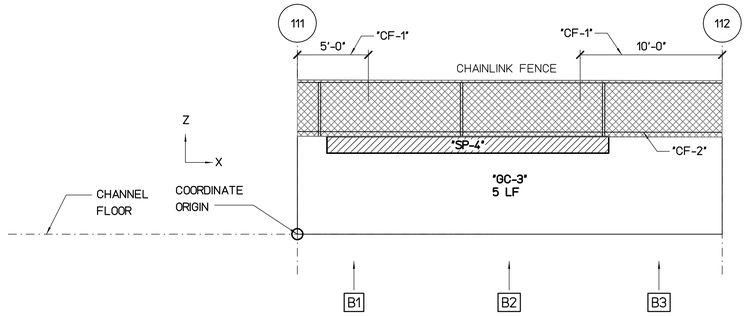


## WALL "B" FLATTEN VIEW

SCALE : 3/16" = 1'-0"

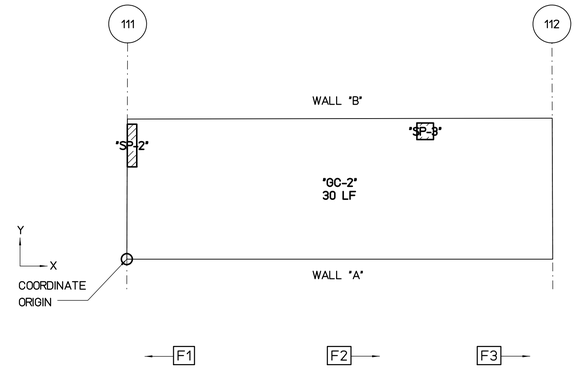


## FLOOR PLAN VIEW

SCALE : 3/16" = 1'-0"

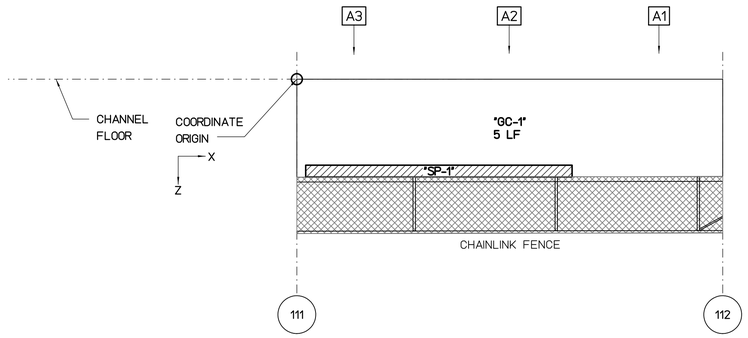


## WALL "A" FLATTEN VIEW

SCALE : 3/16" = 1'-0"

REPAIR LEGEND AND NOTES:

- [2] CRACK AND SPALL REPAIR TYPES, SEE SHEETS SR201 AND SR202 FOR DETAILS. TYPE [*] INDICATES NO-REPAIR
- (A) CHAINLINK FENCE REPAIR TYPES, SEE SHEETS SF201 AND SF202 FOR DETAILS
- 1.0 TOP OF WALL LEANING DISTANCE TOWARD CHANNEL IN INCHES, SEE SHEETS SL101 TO SL207 FOR CONCRETE LINING

PHOTO LEGEND:

- A1 WALL "A" ELEVATION PHOTO IDENTIFICATION SEE FLATTEN VIEW FOR PHOTO LOCATION
- B1 WALL "B" ELEVATION PHOTO IDENTIFICATION SEE FLATTEN VIEW FOR PHOTO LOCATION
- F1 CHANNEL FLOOR PHOTO IDENTIFICATION SEE FLOOR PLAN VIEW FOR PHOTO LOCATION

B1



B2



B3



F1



F2



F3



A1



A2



A3



### SPALL REPAIR CHART

| MARK | LOCATION | REPAIR TYPE | SPALL DIMENSION L | SPALL DIMENSION W | SPALL DIMENSION D | SPALL VOLUME | SPALL CENTER COORDINATE X | SPALL CENTER COORDINATE Y OR Z | RATING |
|---|---|---|---|---|---|---|---|---|---|
| "SP-1" | WALL "A" | [3] | 225 | 10 | 2 | 4500 | 10 | 6.5 | 7 |
| "SP-2" | FLOOR | [3] | 8 | 36 | 2 | 576 | 0.4 | 8 | 6 |
| "SP-3" | FLOOR | [3] | 14 | 14 | 2 | 392 | 21 | 9 | 7 |
| "SP-4" | WALL "B" | [3] | 238 | 14 | 2 | 6664 | 12 | 6.3 | 7 |

### CHAINLINK FENCE REPAIR CHART

| MARK | LOCATION | REPAIR TYPE | POSTS | TOP RAIL | BOTTOM WIRE | BRACE | FABRIC |
|---|---|---|---|---|---|---|---|
| "CF-1" | WALL "B" | (E) | - | - | - | - | DAMAGED 15'x4' |
| "CF-2" | WALL "B" | (D) | - | - | DAMAGED 30' | - | - |

### CRACK REPAIR CHART

| MARK | LOCATION | REPAIR TYPE | GENERAL CRACKS (LF) | MAJOR CRACKS WIDTH (IN) | MAJOR CRACKS LENGTH (FT) | MAJOR CRACKS START PNT X | MAJOR CRACKS START PNT Y,Z | MAJOR CRACKS END PNT X | MAJOR CRACKS END PNT Y,Z | RATING |
|---|---|---|---|---|---|---|---|---|---|---|
| "GC-1" | WALL "A" | [*] | 5 | - | - | - | - | - | - | 9 |
| "GC-2" | FLOOR | [*] | 30 | - | - | - | - | - | - | 8 |
| "GC-3" | WALL "B" | [*] | 5 | - | - | - | - | - | - | 9 |

GRAPHIC SCALES:

0 1' 2' 4' 8' 12' 16'

3/16"=1'-0"

| REVISION NO. | DATE | REVISIONS | BY |
|---|---|---|---|

ATHER R. DAR
LICENSED PROFESSIONAL ENGINEER
No. 7808-S
HAWAII U.S.A.
Exp. Date: 4-30-20

THIS WORK WAS PREPARED BY ME OR UNDER MY SUPERVISION AND CONSTRUCTION OF THIS PROJECT WILL BE UNDER MY OBSERVATION

DEPARTMENT OF HAWAIIAN HOMELAND

# NANAKULI FLOOD CONTROL CHANNEL IMPROVEMENTS NANAKULI VALLEY, OAHU HAWAII

## CHANNEL SEGMENT [112] REPAIR DETAILS

| | |
|---|---|
| DESIGNED BY: | TTP |
| DRAWN BY: | AK, AP, DL |
| CHECKED BY: | AD |
| SUPV: | |
| DATE: | 03/05/2019 |


HAWAII ENGINEERING GROUP, Inc.
Civil & Structural Engineers
1088 BISHOP STREET #2506
HONOLULU, HI 96813
Tel: 808-533-2092


JOB NO.

SHEET C112

121 OF 225 SHTS

FILE ___ DRAWER ___ ___ FOLDER ___ ___

Plot date: 15-Apr-2020

Full Size Plot

Plot date: 15-Apr-2020
Full Size Plot

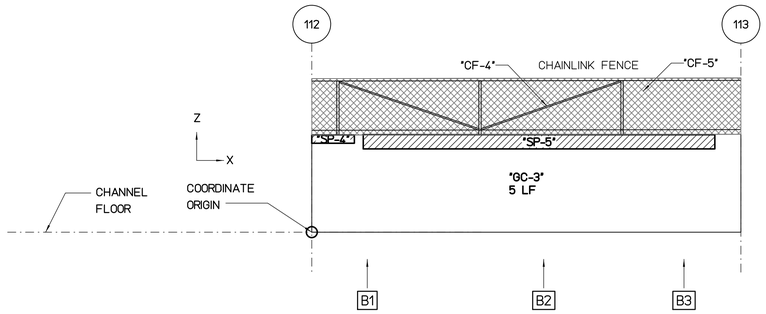


## WALL "B" FLATTEN VIEW

SCALE : 3/16" = 1'-0"

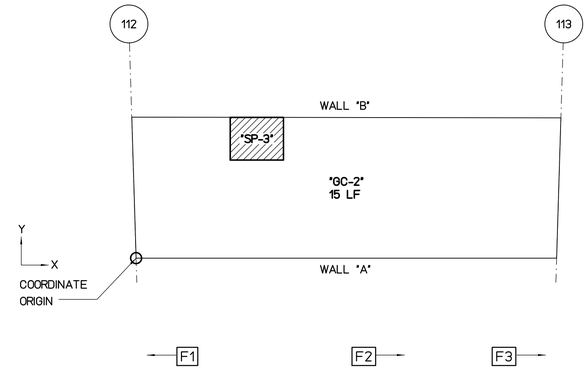


## FLOOR PLAN VIEW

SCALE : 3/16" = 1'-0"

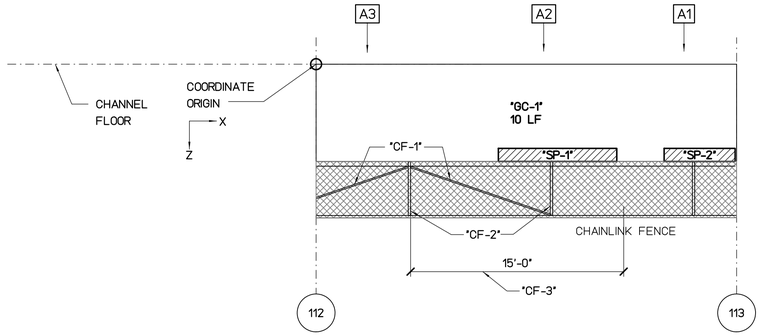


## WALL "A" FLATTEN VIEW

SCALE : 3/16" = 1'-0"

REPAIR LEGEND AND NOTES:

- [2] CRACK AND SPALL REPAIR TYPES, SEE SHEETS SR201 AND SR202 FOR DETAILS. TYPE [*] INDICATES NO-REPAIR
- (A) CHAINLINK FENCE REPAIR TYPES, SEE SHEETS SF201 AND SF202 FOR DETAILS
- 1.0> TOP OF WALL LEANING DISTANCE TOWARD CHANNEL IN INCHES, SEE SHEETS SL101 TO SL207 FOR CONCRETE LINING

PHOTO LEGEND:

- [A1] WALL "A" ELEVATION PHOTO IDENTIFICATION SEE FLATTEN VIEW FOR PHOTO LOCATION
- [B1] WALL "B" ELEVATION PHOTO IDENTIFICATION SEE FLATTEN VIEW FOR PHOTO LOCATION
- [F1] CHANNEL FLOOR PHOTO IDENTIFICATION SEE FLOOR PLAN VIEW FOR PHOTO LOCATION

B1



B2



B3



F1



F2



F3



A1



A2



A3




### SPALL REPAIR CHART

| MARK | LOCATION | REPAIR TYPE | SPALL DIMENSION L | SPALL DIMENSION W | SPALL DIMENSION D | SPALL VOLUME | SPALL CENTER COORDINATE X | SPALL CENTER COORDINATE Y OR Z | RATING |
|---|---|---|---|---|---|---|---|---|---|
| "SP-1" | WALL "A" | 3 | 100 | 11 | 2 | 2200 | 17 | 6.4 | 7 |
| "SP-2" | WALL "A" | 3 | 60 | 11 | 2 | 1320 | 27 | 6.4 | 7 |
| "SP-3" | FLOOR | 3 | 45 | 36 | 2 | 3240 | 8.5 | 8.4 | 7 |
| "SP-4" | WALL "B" | 3 | 36 | 7 | 2 | 504 | 1.5 | 6.6 | 7 |
| "SP-5" | WALL "B" | 3 | 297 | 12 | 2 | 7128 | 16 | 6.4 | 7 |

### CHAINLINK FENCE REPAIR CHART

| MARK | LOCATION | REPAIR TYPE | POSTS | TOP RAIL | BOTTOM WIRE | BRACE | FABRIC |
|---|---|---|---|---|---|---|---|
| "CF-1" | WALL "A" | (B) | - | - | - | BENT 2 | - |
| "CF-2" | WALL "A" | (A) | BENT 2 | - | - | - | - |
| "CF-3" | WALL "A" | (C) | - | DAMAGED 15' | - | - | - |
| "CF-4" | WALL "B" | (B) | - | - | - | BENT 1 | - |
| "CF-5" | WALL "B" | (E) | - | - | - | - | DAMAGED 30'x4' |

### CRACK REPAIR CHART

| MARK | LOCATION | REPAIR TYPE | GENERAL CRACKS (LF) | MAJOR CRACKS WIDTH (IN) | MAJOR CRACKS LENGTH (FT) | MAJOR CRACKS START PNT X | MAJOR CRACKS START PNT Y,Z | MAJOR CRACKS END PNT X | MAJOR CRACKS END PNT Y,Z | RATING |
|---|---|---|---|---|---|---|---|---|---|---|
| "GC-1" | WALL "A" | * | 10 | - | - | - | - | - | - | 8 |
| "GC-2" | FLOOR | * | 15 | - | - | - | - | - | - | 8 |
| "GC-3" | WALL "B" | * | 5 | - | - | - | - | - | - | 9 |

GRAPHIC SCALES:

0 1' 2' 4' 8' 12' 16'

3/16"=1'-0"

| REVISION NO. | DATE | REVISIONS | BY |
|---|---|---|---|

ATHER R. DAR
LICENSED PROFESSIONAL ENGINEER
No. 7808-S
HAWAII U.S.A.
Exp. Date: 4-30-20

THIS WORK WAS PREPARED BY ME OR UNDER MY SUPERVISION AND CONSTRUCTION OF THIS PROJECT WILL BE UNDER MY OBSERVATION

DEPARTMENT OF HAWAIIAN HOMELAND

# NANAKULI FLOOD CONTROL CHANNEL IMPROVEMENTS NANAKULI VALLEY, OAHU HAWAII

CHANNEL SEGMENT [113] REPAIR DETAILS

| | |
|---|---|
| DESIGNED BY: | TTP |
| DRAWN BY: | AK, AP, DL |
| CHECKED BY: | AD |
| SUPV: | |
| DATE: | 03/05/2019 |

HAWAII ENGINEERING GROUP, Inc.
Civil & Structural Engineers
1088 BISHOP STREET #2506
HONOLULU, HI 96813
Tel: 808-533-2092

JOB NO.

SHEET C113
122 OF 225 SHTS

FILE ___ DRAWER ___ ___ FOLDER ___ ___

Plot date: 15-Apr-2020
Full Size Plot

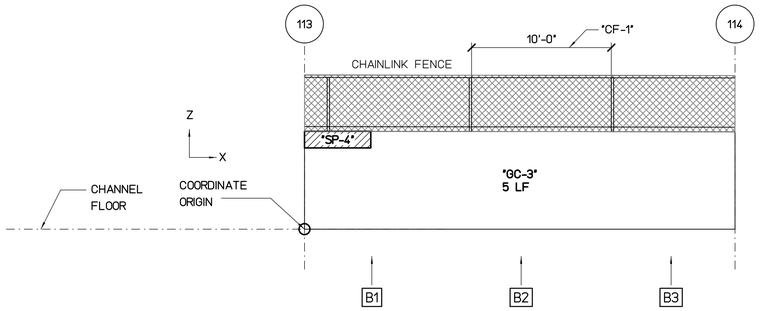


## WALL "B" FLATTEN VIEW

SCALE : 3/16" = 1'-0"

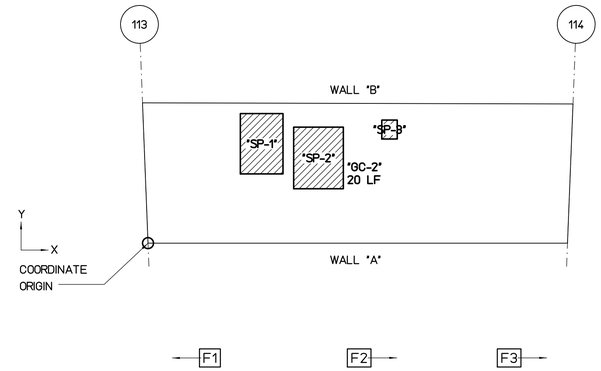


## FLOOR PLAN VIEW

SCALE : 3/16" = 1'-0"

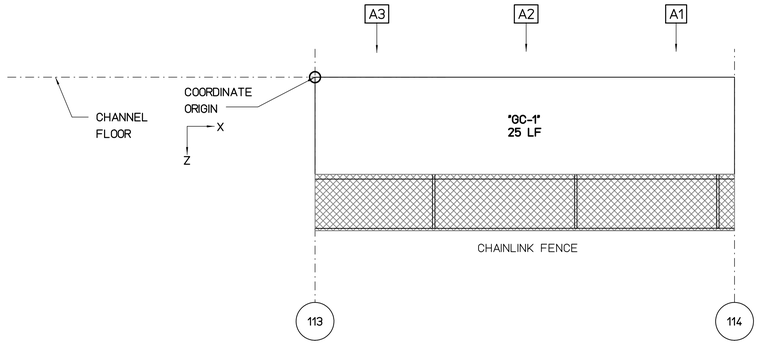


## WALL "A" FLATTEN VIEW

SCALE : 3/16" = 1'-0"

REPAIR LEGEND AND NOTES:

- [2] CRACK AND SPALL REPAIR TYPES, SEE SHEETS SR201 AND SR202 FOR DETAILS. TYPE [*] INDICATES NO-REPAIR
- (A) CHAINLINK FENCE REPAIR TYPES, SEE SHEETS SF201 AND SF202 FOR DETAILS
- 1.0> TOP OF WALL LEANING DISTANCE TOWARD CHANNEL IN INCHES, SEE SHEETS SL101 TO SL207 FOR CONCRETE LINING

PHOTO LEGEND:

- [A1] WALL "A" ELEVATION PHOTO IDENTIFICATION SEE FLATTEN VIEW FOR PHOTO LOCATION
- [B1] WALL "B" ELEVATION PHOTO IDENTIFICATION SEE FLATTEN VIEW FOR PHOTO LOCATION
- [F1] CHANNEL FLOOR PHOTO IDENTIFICATION SEE FLOOR PLAN VIEW FOR PHOTO LOCATION

B1



B2



B3



F1



F2



F3



A1



A2



A3



### SPALL REPAIR CHART

| MARK | LOCATION | REPAIR TYPE | SPALL DIMENSION L | SPALL DIMENSION W | SPALL DIMENSION D | SPALL VOLUME | SPALL CENTER COORDINATE X | SPALL CENTER COORDINATE Y OR Z | RATING |
|---|---|---|---|---|---|---|---|---|---|
| "SP-1" | FLOOR | [3] | 36 | 51 | 2 | 3672 | 8 | 7 | 7 |
| "SP-2" | FLOOR | [3] | 42 | 52 | 2 | 4368 | 12 | 6 | 7 |
| "SP-3" | FLOOR | [3] | 13 | 16 | 2 | 416 | 17 | 8 | 6 |
| "SP-4" | WALL "B" | [3] | 56 | 14 | 2 | 1568 | 2.3 | 6.3 | 7 |

### CHAINLINK FENCE REPAIR CHART

| MARK | LOCATION | REPAIR TYPE | POSTS | TOP RAIL | BOTTOM WIRE | BRACE | FABRIC |
|---|---|---|---|---|---|---|---|
| "CF-1" | WALL "B" | (C) | - | BENT 10" | - | - | - |

### CRACK REPAIR CHART

| MARK | LOCATION | REPAIR TYPE | GENERAL CRACKS (LF) | MAJOR CRACKS WIDTH (IN) | MAJOR CRACKS LENGTH (FT) | MAJOR CRACKS START PNT X | MAJOR CRACKS START PNT Y,Z | MAJOR CRACKS END PNT X | MAJOR CRACKS END PNT Y,Z | RATING |
|---|---|---|---|---|---|---|---|---|---|---|
| "GC-1" | WALL "A" | [*] | 25 | - | - | - | - | - | - | 8 |
| "GC-2" | FLOOR | [*] | 20 | - | - | - | - | - | - | 8 |
| "GC-3" | WALL "B" | [*] | 5 | - | - | - | - | - | - | 9 |

GRAPHIC SCALES:

0 1' 2' 4' 8' 12' 16'

3/16"=1'-0"

| REVISION NO. | DATE | REVISIONS | BY |
|---|---|---|---|
| | | | |

ATHER R. DAR
LICENSED PROFESSIONAL ENGINEER
No. 7808-S
HAWAII U.S.A.
Exp. Date: 4-30-20

THIS WORK WAS PREPARED BY ME OR UNDER MY SUPERVISION AND CONSTRUCTION OF THIS PROJECT WILL BE UNDER MY OBSERVATION

DEPARTMENT OF HAWAIIAN HOMELAND

# NANAKULI FLOOD CONTROL CHANNEL IMPROVEMENTS NANAKULI VALLEY, OAHU HAWAII

CHANNEL SEGMENT [114] REPAIR DETAILS

| | |
|---|---|
| DESIGNED BY: | TTP |
| DRAWN BY: | AK, AP, DL |
| CHECKED BY: | AD |
| SUPV: | |
| DATE: | 03/05/2019 |

HAWAII ENGINEERING GROUP, Inc.
Civil & Structural Engineers
1088 BISHOP STREET #2506
HONOLULU, HI 96813
Tel: 808-533-2092

JOB NO.

SHEET C114
123 OF 225 SHTS

FILE ___ DRAWER ___ ___ FOLDER ___ ___

Plot date: 15-Apr-2020
Full Size Plot

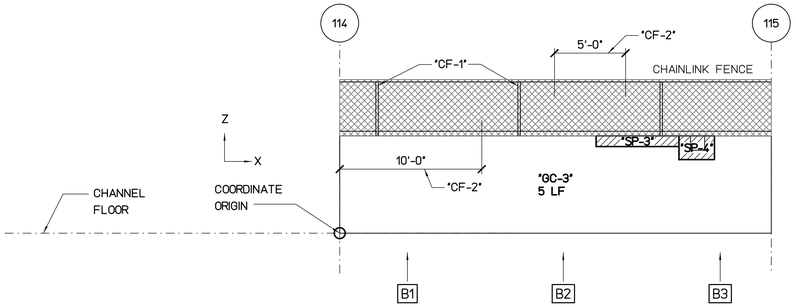


## WALL "B" FLATTEN VIEW

SCALE : 3/16" = 1'-0"

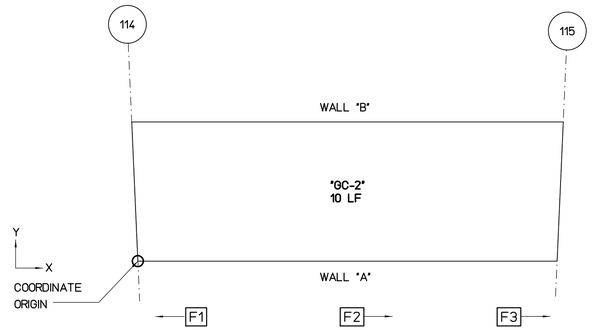


## FLOOR PLAN VIEW

SCALE : 3/16" = 1'-0"

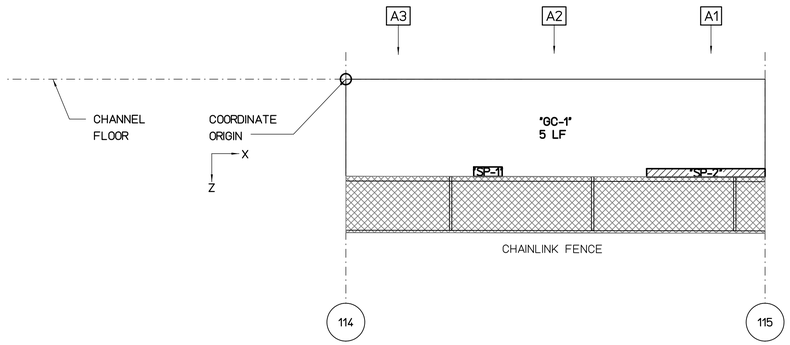


## WALL "A" FLATTEN VIEW

SCALE : 3/16" = 1'-0"

REPAIR LEGEND AND NOTES:

- 2 — CRACK AND SPALL REPAIR TYPES, SEE SHEETS SR201 AND SR202 FOR DETAILS. TYPE [*] INDICATES NO-REPAIR
- (A) — CHAINLINK FENCE REPAIR TYPES, SEE SHEETS SF201 AND SF202 FOR DETAILS
- 1.0 — TOP OF WALL LEANING DISTANCE TOWARD CHANNEL IN INCHES, SEE SHEETS SL101 TO SL207 FOR CONCRETE LINING

PHOTO LEGEND:

- A1 — WALL "A" ELEVATION PHOTO IDENTIFICATION SEE FLATTEN VIEW FOR PHOTO LOCATION
- B1 — WALL "B" ELEVATION PHOTO IDENTIFICATION SEE FLATTEN VIEW FOR PHOTO LOCATION
- F1 — CHANNEL FLOOR PHOTO IDENTIFICATION SEE FLOOR PLAN VIEW FOR PHOTO LOCATION

B1



B2



B3



F1



F2



F3



A1



A2



A3



### SPALL REPAIR CHART

| MARK | LOCATION | REPAIR TYPE | SPALL DIMENSION L | SPALL DIMENSION W | SPALL DIMENSION D | SPALL VOLUME | SPALL CENTER COORDINATE X | SPALL CENTER COORDINATE Y OR Z | RATING |
|---|---|---|---|---|---|---|---|---|---|
| "SP-1" | WALL "A" | 3 | 24 | 8 | 2 | 384 | 10 | 6.5 | 7 |
| "SP-2" | WALL "A" | 3 | 100 | 7 | 2 | 1400 | 25.3 | 6.6 | 7 |
| "SP-3" | WALL "B" | 3 | 70 | 9 | 2 | 1260 | 21 | 6.5 | 7 |
| "SP-4" | WALL "B" | 3 | 30 | 20 | 2 | 1200 | 25.1 | 6 | 6 |

### CHAINLINK FENCE REPAIR CHART

| MARK | LOCATION | REPAIR TYPE | POSTS | TOP RAIL | BOTTOM WIRE | BRACE | FABRIC |
|---|---|---|---|---|---|---|---|
| "CF-1" | WALL "B" | (A) | DAMAGED 2 | - | - | - | - |
| "CF-2" | WALL "B" | (E) | - | - | - | - | DAMAGED 15'x4' |

### CRACK REPAIR CHART

| MARK | LOCATION | REPAIR TYPE | GENERAL CRACKS (LF) | MAJOR CRACKS WIDTH (IN) | MAJOR CRACKS LENGTH (FT) | MAJOR CRACKS START PNT X | MAJOR CRACKS START PNT Y,Z | MAJOR CRACKS END PNT X | MAJOR CRACKS END PNT Y,Z | RATING |
|---|---|---|---|---|---|---|---|---|---|---|
| "GC-1" | WALL "A" | * | 5 | - | - | - | - | - | - | 9 |
| "GC-2" | FLOOR | * | 10 | - | - | - | - | - | - | 8 |
| "GC-3" | WALL "B" | * | 5 | - | - | - | - | - | - | 9 |

GRAPHIC SCALES:

0 1' 2' 4' 8' 12' 16'

3/16"=1'-0"

| REVISION NO. | DATE | REVISIONS | BY |
|---|---|---|---|

ATHER R. DAR
LICENSED PROFESSIONAL ENGINEER
No. 7808-S
HAWAII U.S.A.

Exp. Date: 4-30-20

THIS WORK WAS PREPARED BY ME OR UNDER MY SUPERVISION AND CONSTRUCTION OF THIS PROJECT WILL BE UNDER MY OBSERVATION

DEPARTMENT OF HAWAIIAN HOMELAND

# NANAKULI FLOOD CONTROL CHANNEL IMPROVEMENTS NANAKULI VALLEY, OAHU HAWAII

## CHANNEL SEGMENT 115 REPAIR DETAILS

| | |
|---|---|
| DESIGNED BY: | TTP |
| DRAWN BY: | AK, AP, DL |
| CHECKED BY: | AD |
| SUPV: | |
| DATE: | 03/05/2019 |

HAWAII ENGINEERING GROUP, Inc.
Civil & Structural Engineers
1088 BISHOP STREET #2506
HONOLULU, HI 96813
Tel: 808-533-2092

JOB NO.

SHEET C115

124 OF 225 SHTS

FILE ___ DRAWER ___ ___ FOLDER ___ ___

Plot date: 15-Apr-2020
Full Size Plot

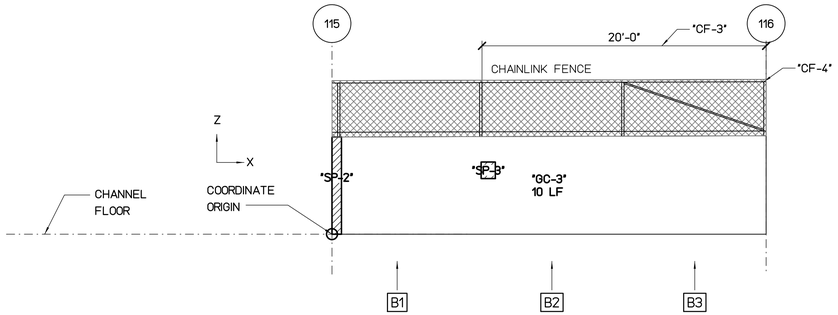


## WALL "B" FLATTEN VIEW

SCALE : 3/16" = 1'-0"

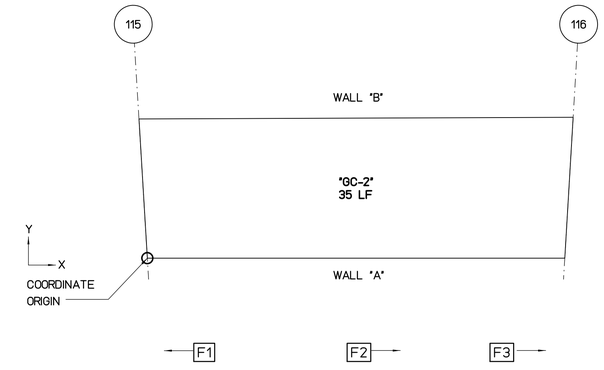


## FLOOR PLAN VIEW

SCALE : 3/16" = 1'-0"

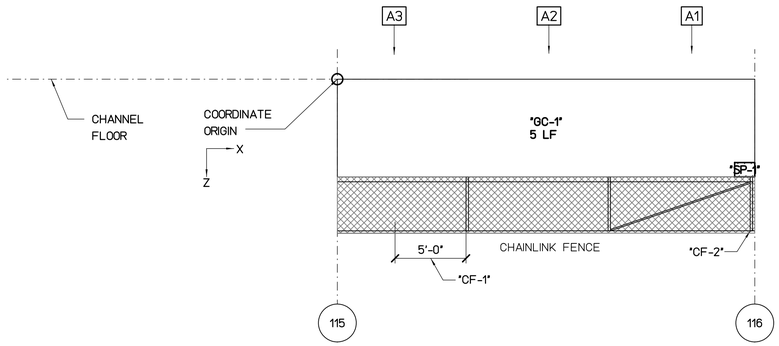


## WALL "A" FLATTEN VIEW

SCALE : 3/16" = 1'-0"

NOTES:

1. SEE SHEET SXXX FOR CRACK REPAIR TYPES
2. SEE SHEET SXXX FOR SPALL REPAIR TYPES
3. SEE SHEET SXXX FOR CHAINLINK FENCE REPAIR TYPES

LEGEND:

- A1 — WALL "A" ELEVATION PHOTO IDENTIFICATION SEE FLATTEN VIEW FOR PHOTO LOCATION
- B1 — WALL "B" ELEVATION PHOTO IDENTIFICATION SEE FLATTEN VIEW FOR PHOTO LOCATION
- F1 — CHANNEL FLOOR PHOTO IDENTIFICATION SEE FLOOR PLAN VIEW FOR PHOTO LOCATION

B1



B2



B3



F1



F2



F3



A1



A2



A3



### SPALL REPAIR CHART

| MARK | LOCATION | REPAIR TYPE | SPALL DIMENSION L | SPALL DIMENSION W | SPALL DIMENSION D | SPALL VOLUME | SPALL CENTER COORDINATE X | SPALL CENTER COORDINATE Y OR Z | RATING |
|---|---|---|---|---|---|---|---|---|---|
| "SP-1" | WALL "A" | 3 | 17 | 12 | 2 | 408 | 28.7 | 6.4 | 6 |
| "SP-2" | WALL "B" | 3 | 8 | 82 | 2 | 1536 | 0.3 | 4 | 6 |
| "SP-3" | WALL "B" | 3 | 12 | 14 | 2 | 336 | 11 | 4.5 | 5 |

### CHAINLINK FENCE REPAIR CHART

| MARK | LOCATION | REPAIR TYPE | POSTS | TOP RAIL | BOTTOM WIRE | BRACE | FABRIC |
|---|---|---|---|---|---|---|---|
| "CF-1" | WALL "A" | E | - | - | - | - | DAMAGED 5'x4' |
| "CF-2" | WALL "A" | A | BENT 1 | - | - | - | - |
| "CF-3" | WALL "B" | E | - | - | - | - | DAMAGED 20'x4' |
| "CF-4" | WALL "B" | A | BENT 1 | - | - | - | - |

### CRACK REPAIR CHART

| MARK | LOCATION | REPAIR TYPE | GENERAL CRACKS (LF) | MAJOR CRACKS WIDTH (IN) | MAJOR CRACKS LENGTH (FT) | MAJOR CRACKS START PNT X | MAJOR CRACKS START PNT Y,Z | MAJOR CRACKS END PNT X | MAJOR CRACKS END PNT Y,Z | RATING |
|---|---|---|---|---|---|---|---|---|---|---|
| "GC-1" | WALL "A" | * | 5 | - | - | - | - | - | - | 9 |
| "GC-2" | FLOOR | * | 35 | - | - | - | - | - | - | 8 |
| "GC-3" | WALL "B" | * | 10 | - | - | - | - | - | - | 8 |

GRAPHIC SCALES:

0 1' 2' 4' 8' 12' 16'

3/16"=1'-0"

| REVISION NO. | DATE | REVISIONS | BY |
|---|---|---|---|

ATHER R. DAR
LICENSED PROFESSIONAL ENGINEER
No. 7808-S
HAWAII U.S.A.
Exp. Date: 4-30-20

THIS WORK WAS PREPARED BY ME OR UNDER MY SUPERVISION AND CONSTRUCTION OF THIS PROJECT WILL BE UNDER MY OBSERVATION

DEPARTMENT OF HAWAIIAN HOMELAND

# NANAKULI FLOOD CONTROL CHANNEL IMPROVEMENTS NANAKULI VALLEY, OAHU HAWAII

CHANNEL SEGMENT 116 REPAIR DETAILS

| | |
|---|---|
| DESIGNED BY: | TTP |
| DRAWN BY: | AK, AP, DL |
| CHECKED BY: | AD |
| SUPV: | |
| DATE: | 03/05/2019 |

HAWAII ENGINEERING GROUP, Inc.
Civil & Structural Engineers
1088 BISHOP STREET #2506
HONOLULU, HI 96813
Tel: 808-533-2092

JOB NO.

SHEET C116
125 OF 225 SHTS

FILE ___ DRAWER ___ ___ FOLDER ___ ___

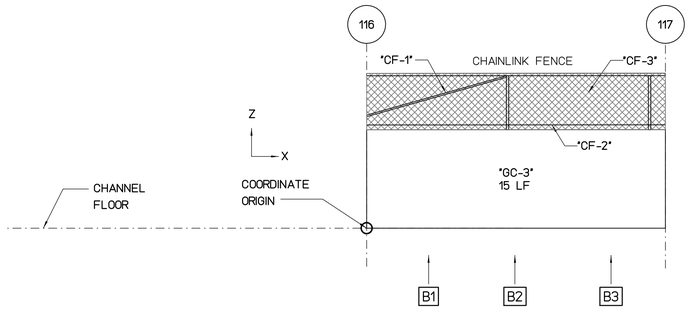


## WALL "B" FLATTEN VIEW

SCALE : 3/16" = 1'-0"

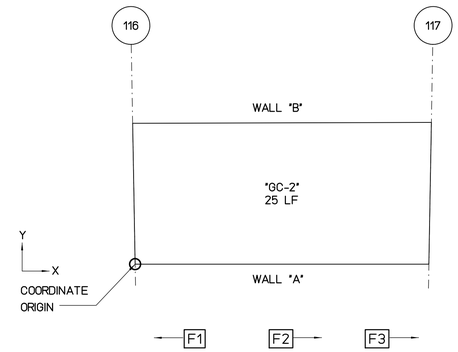


## FLOOR PLAN VIEW

SCALE : 3/16" = 1'-0"

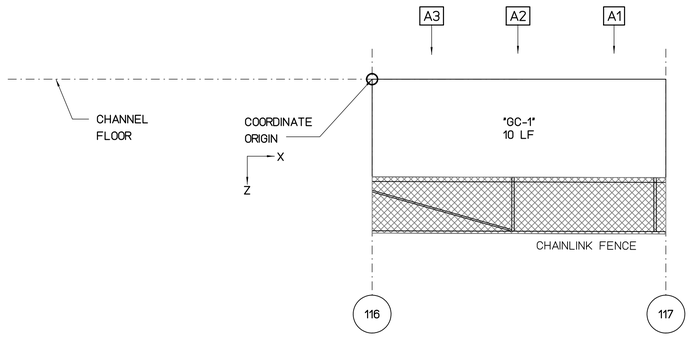


## WALL "A" FLATTEN VIEW

SCALE : 3/16" = 1'-0"

REPAIR LEGEND AND NOTES:

- 2 — CRACK AND SPALL REPAIR TYPES, SEE SHEETS SR201 AND SR202 FOR DETAILS. TYPE [*] INDICATES NO-REPAIR
- (A) — CHAINLINK FENCE REPAIR TYPES, SEE SHEETS SF201 AND SF202 FOR DETAILS
- 1.0 — TOP OF WALL LEANING DISTANCE TOWARD CHANNEL IN INCHES, SEE SHEETS SL101 TO SL207 FOR CONCRETE LINING

PHOTO LEGEND:

- A1 — WALL "A" ELEVATION PHOTO IDENTIFICATION SEE FLATTEN VIEW FOR PHOTO LOCATION
- B1 — WALL "B" ELEVATION PHOTO IDENTIFICATION SEE FLATTEN VIEW FOR PHOTO LOCATION
- F1 — CHANNEL FLOOR PHOTO IDENTIFICATION SEE FLOOR PLAN VIEW FOR PHOTO LOCATION

B1



B2



B3



F1

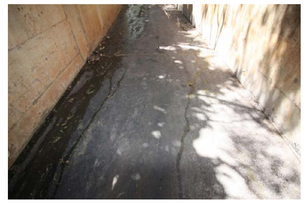

F2

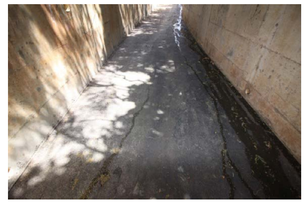

F3



A1



A2



A3



### SPALL REPAIR CHART

| MARK | LOCATION | REPAIR TYPE | SPALL DIMENSION | | | SPALL VOLUME | SPALL CENTER COORDINATE | | RATING |
|---|---|---|---|---|---|---|---|---|---|
| | | | L | W | D | | X | Y OR Z | |
| | | | | | | | | | |
| | | | | | | | | | |
| | | | | | | | | | |
| | | | | | | | | | |
| | | | | | | | | | |
| | | | | | | | | | |
| | | | | | | | | | |

### CHAINLINK FENCE REPAIR CHART

| MARK | LOCATION | REPAIR TYPE | POSTS | TOP RAIL | BOTTOM WIRE | BRACE | FABRIC |
|---|---|---|---|---|---|---|---|
| "CF-1" | WALL "B" | (B) | - | - | - | DAMAGED 1 | - |
| "CF-2" | WALL "B" | (D) | - | - | DAMAGED 20' | - | - |
| "CF-3" | WALL "B" | (E) | - | - | - | - | DAMAGED 20'x4' |
| | | | | | | | |
| | | | | | | | |
| | | | | | | | |
| | | | | | | | |
| | | | | | | | |
| | | | | | | | |

### CRACK REPAIR CHART

| MARK | LOCATION | REPAIR TYPE | GENERAL CRACKS (LF) | MAJOR CRACKS | | | | | | RATING |
|---|---|---|---|---|---|---|---|---|---|---|
| | | | | WIDTH (IN) | LENGTH (FT) | START PNT X | START PNT Y,Z | END PNT X | END PNT Y,Z | |
| "GC-1" | WALL "A" | [*] | 10 | - | - | - | - | - | - | 8 |
| "GC-2" | FLOOR | [*] | 25 | - | - | - | - | - | - | 8 |
| "GC-3" | WALL "B" | [*] | 15 | - | - | - | - | - | - | 8 |
| | | | | | | | | | | |
| | | | | | | | | | | |
| | | | | | | | | | | |
| | | | | | | | | | | |

GRAPHIC SCALES:

0 1' 2' 4' 8' 12' 16'

3/16"=1'-0"

| REVISION NO. | DATE | REVISIONS | BY |
|---|---|---|---|
| | | | |

ATHER R. DAR
LICENSED PROFESSIONAL ENGINEER
No. 7808-S
HAWAII U.S.A.

Exp. Date: 4-30-20

THIS WORK WAS PREPARED BY ME OR UNDER MY SUPERVISION AND CONSTRUCTION OF THIS PROJECT WILL BE UNDER MY OBSERVATION

DEPARTMENT OF HAWAIIAN HOMELAND

# NANAKULI FLOOD CONTROL CHANNEL IMPROVEMENTS NANAKULI VALLEY, OAHU HAWAII

## CHANNEL SEGMENT 117 REPAIR DETAILS

| | |
|---|---|
| DESIGNED BY: | TTP |
| DRAWN BY: | AK, AP, DL |
| CHECKED BY: | AD |
| SUPV: | |
| DATE: | 03/05/2019 |


HAWAII ENGINEERING GROUP, Inc.
Civil & Structural Engineers
1088 BISHOP STREET #2506
HONOLULU, HI 96813
Tel: 808-533-2092


JOB NO.

SHEET C117

126 OF 225 SHTS

FILE ___ DRAWER ___ ___ FOLDER ___ ___

Plot date: 15-Apr-2020

Full Size Plot

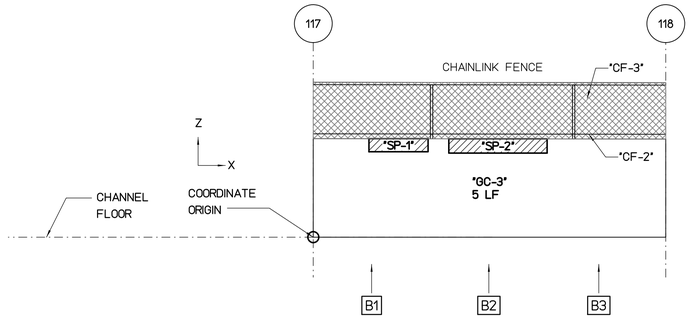


## WALL "B" FLATTEN VIEW

SCALE : 3/16" = 1'-0"

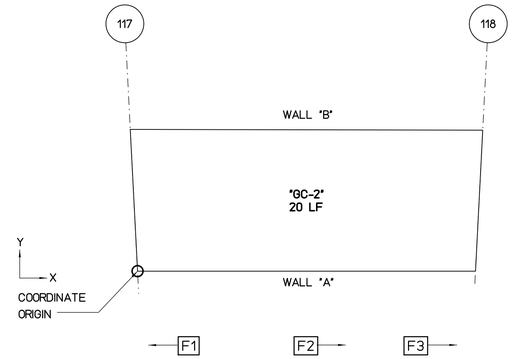


## FLOOR PLAN VIEW

SCALE : 3/16" = 1'-0"

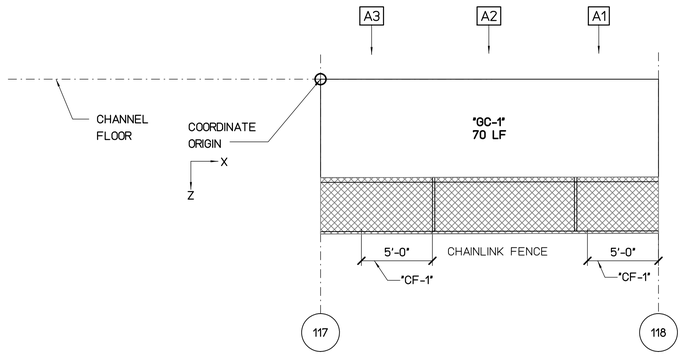


## WALL "A" FLATTEN VIEW

SCALE : 3/16" = 1'-0"

REPAIR LEGEND AND NOTES:

- 2 — CRACK AND SPALL REPAIR TYPES, SEE SHEETS SR201 AND SR202 FOR DETAILS. TYPE [*] INDICATES NO-REPAIR
- (A) — CHAINLINK FENCE REPAIR TYPES, SEE SHEETS SF201 AND SF202 FOR DETAILS
- 1.0 — TOP OF WALL LEANING DISTANCE TOWARD CHANNEL IN INCHES, SEE SHEETS SL101 TO SL207 FOR CONCRETE LINING

PHOTO LEGEND:

- A1 — WALL "A" ELEVATION PHOTO IDENTIFICATION SEE FLATTEN VIEW FOR PHOTO LOCATION
- B1 — WALL "B" ELEVATION PHOTO IDENTIFICATION SEE FLATTEN VIEW FOR PHOTO LOCATION
- F1 — CHANNEL FLOOR PHOTO IDENTIFICATION SEE FLOOR PLAN VIEW FOR PHOTO LOCATION

B1



B2



B3



F1



F2

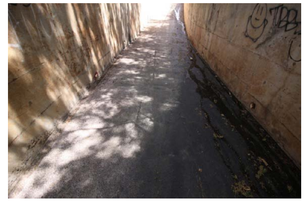

F3



A1



A2



A3



### SPALL REPAIR CHART

| MARK | LOCATION | REPAIR TYPE | SPALL DIMENSION L | SPALL DIMENSION W | SPALL DIMENSION D | SPALL VOLUME | SPALL CENTER COORDINATE X | SPALL CENTER COORDINATE Y OR Z | RATING |
|---|---|---|---|---|---|---|---|---|---|
| "SP-1" | WALL "B" | 3 | 50 | 11 | 2 | 1100 | 6 | 6.5 | 7 |
| "SP-2" | WALL "B" | 3 | 83 | 12 | 2 | 1992 | 13 | 6.4 | 7 |

### CHAINLINK FENCE REPAIR CHART

| MARK | LOCATION | REPAIR TYPE | POSTS | TOP RAIL | BOTTOM WIRE | BRACE | FABRIC |
|---|---|---|---|---|---|---|---|
| "CF-1" | WALL "A" | (E) | - | - | - | - | DAMAGED 10'x4' |
| "CF-2" | WALL "B" | (D) | - | - | DAMAGED 25' | - | - |
| "CF-3" | WALL "B" | (E) | - | - | - | - | DAMAGED 25'x4' |

### CRACK REPAIR CHART

| MARK | LOCATION | REPAIR TYPE | GENERAL CRACKS (LF) | MAJOR CRACKS WIDTH (IN) | MAJOR CRACKS LENGTH (FT) | MAJOR CRACKS START PNT X | MAJOR CRACKS START PNT Y,Z | MAJOR CRACKS END PNT X | MAJOR CRACKS END PNT Y,Z | RATING |
|---|---|---|---|---|---|---|---|---|---|---|
| "GC-1" | WALL "A" | * | 70 | - | - | - | - | - | - | 8 |
| "GC-2" | FLOOR | * | 20 | - | - | - | - | - | - | 8 |
| "GC-3" | WALL "B" | * | 5 | - | - | - | - | - | - | 9 |

GRAPHIC SCALES:

0 1' 2' 4' 8' 12' 16'

3/16"=1'-0"

| REVISION NO. | DATE | REVISIONS | BY |
|---|---|---|---|

ATHER R. DAR
LICENSED PROFESSIONAL ENGINEER
No. 7808-S
HAWAII U.S.A.

Exp. Date: 4-30-20

THIS WORK WAS PREPARED BY ME OR UNDER MY SUPERVISION AND CONSTRUCTION OF THIS PROJECT WILL BE UNDER MY OBSERVATION

DEPARTMENT OF HAWAIIAN HOMELAND

NANAKULI FLOOD CONTROL
CHANNEL IMPROVEMENTS
NANAKULI VALLEY, OAHU HAWAII

CHANNEL SEGMENT 118 REPAIR DETAILS

| | |
|---|---|
| DESIGNED BY: | TTP |
| DRAWN BY: | AK, AP, DL |
| CHECKED BY: | AD |
| SUPV: | |
| DATE: | 03/05/2019 |

HAWAII ENGINEERING GROUP, Inc.
Civil & Structural Engineers
1088 BISHOP STREET #2506
HONOLULU, HI 96813
Tel: 808-533-2092

JOB NO.

SHEET C118
127 OF 225 SHTS

FILE ___ DRAWER ___ ___ FOLDER ___ ___

Plot date: 15-Apr-2020

Full Size Plot

Plot date: 15-Apr-2020
Full Size Plot

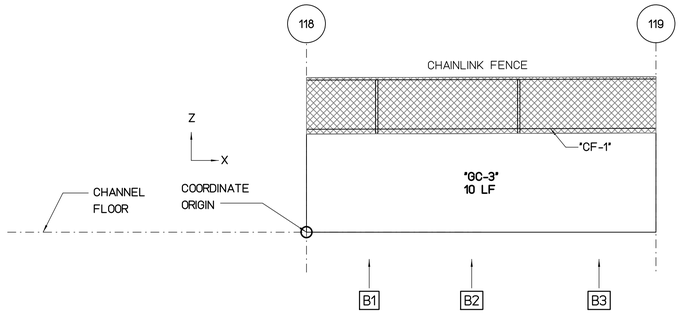


## WALL "B" FLATTEN VIEW

SCALE : 3/16" = 1'-0"

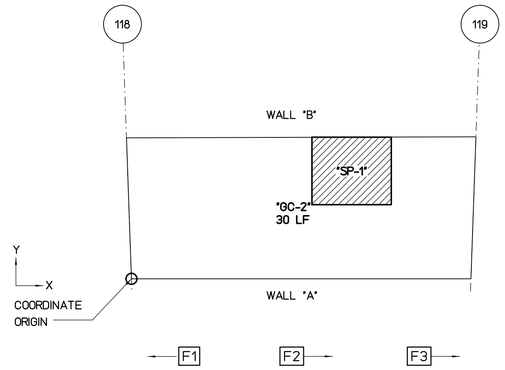


## FLOOR PLAN VIEW

SCALE : 3/16" = 1'-0"

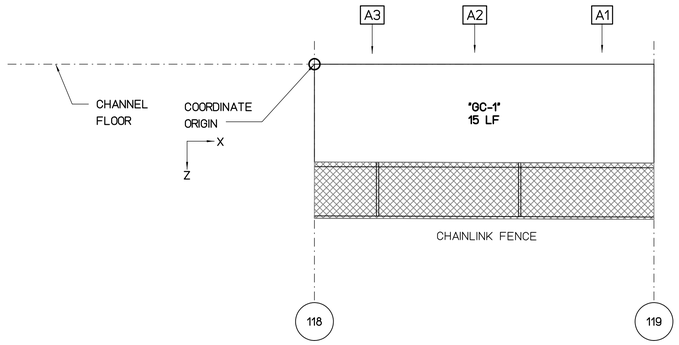


## WALL "A" FLATTEN VIEW

SCALE : 3/16" = 1'-0"

REPAIR LEGEND AND NOTES:

- 2 — CRACK AND SPALL REPAIR TYPES, SEE SHEETS SR201 AND SR202 FOR DETAILS. TYPE [*] INDICATES NO-REPAIR
- (A) — CHAINLINK FENCE REPAIR TYPES, SEE SHEETS SF201 AND SF202 FOR DETAILS
- 1.0 — TOP OF WALL LEANING DISTANCE TOWARD CHANNEL IN INCHES, SEE SHEETS SL101 TO SL207 FOR CONCRETE LINING

PHOTO LEGEND:

- A1 — WALL "A" ELEVATION PHOTO IDENTIFICATION SEE FLATTEN VIEW FOR PHOTO LOCATION
- B1 — WALL "B" ELEVATION PHOTO IDENTIFICATION SEE FLATTEN VIEW FOR PHOTO LOCATION
- F1 — CHANNEL FLOOR PHOTO IDENTIFICATION SEE FLOOR PLAN VIEW FOR PHOTO LOCATION

B1



B2



B3



F1



F2



F3



A1



A2



A3



### SPALL REPAIR CHART

| MARK | LOCATION | REPAIR TYPE | SPALL DIMENSION L | SPALL DIMENSION W | SPALL DIMENSION D | SPALL VOLUME | SPALL CENTER COORDINATE X | SPALL CENTER COORDINATE Y OR Z | RATING |
|---|---|---|---|---|---|---|---|---|---|
| "SP-1" | FLOOR | 3 | 67 | 57 | 2 | 7638 | 15.5 | 7.6 | 7 |

### CHAINLINK FENCE REPAIR CHART

| MARK | LOCATION | REPAIR TYPE | POSTS | TOP RAIL | BOTTOM WIRE | BRACE | FABRIC |
|---|---|---|---|---|---|---|---|
| "CF-1" | WALL "B" | (D) | - | - | DAMAGED 25' | - | - |

### CRACK REPAIR CHART

| MARK | LOCATION | REPAIR TYPE | GENERAL CRACKS (LF) | MAJOR CRACKS WIDTH (IN) | MAJOR CRACKS LENGTH (FT) | MAJOR CRACKS START PNT X | MAJOR CRACKS START PNT Y,Z | MAJOR CRACKS END PNT X | MAJOR CRACKS END PNT Y,Z | RATING |
|---|---|---|---|---|---|---|---|---|---|---|
| "GC-1" | WALL "A" | * | 15 | - | - | - | - | - | - | 8 |
| "GC-2" | FLOOR | * | 30 | - | - | - | - | - | - | 8 |
| "GC-3" | WALL "B" | * | 10 | - | - | - | - | - | - | 8 |

GRAPHIC SCALES:

0 1' 2' 4' 8' 12' 16'

3/16"=1'-0"

| REVISION NO. | DATE | REVISIONS | BY |
|---|---|---|---|

ATHER R. DAR
LICENSED PROFESSIONAL ENGINEER
No. 7808-S
HAWAII U.S.A.
Exp. Date: 4-30-20

THIS WORK WAS PREPARED BY ME OR UNDER MY SUPERVISION AND CONSTRUCTION OF THIS PROJECT WILL BE UNDER MY OBSERVATION

DEPARTMENT OF HAWAIIAN HOMELAND

NANAKULI FLOOD CONTROL
CHANNEL IMPROVEMENTS
NANAKULI VALLEY, OAHU HAWAII

CHANNEL SEGMENT 119 REPAIR DETAILS

| | |
|---|---|
| DESIGNED BY: | TTP |
| DRAWN BY: | AK, AP, DL |
| CHECKED BY: | AD |
| SUPV: | |
| DATE: | 03/05/2019 |

HAWAII ENGINEERING GROUP, Inc.
Civil & Structural Engineers
1088 BISHOP STREET #2506
HONOLULU, HI 96813
Tel: 808-533-2092

JOB NO.

SHEET C119
128 OF 225 SHTS

FILE ___ DRAWER ___ ___ FOLDER ___ ___

Plot date: 15-Apr-2020
Full Size Plot

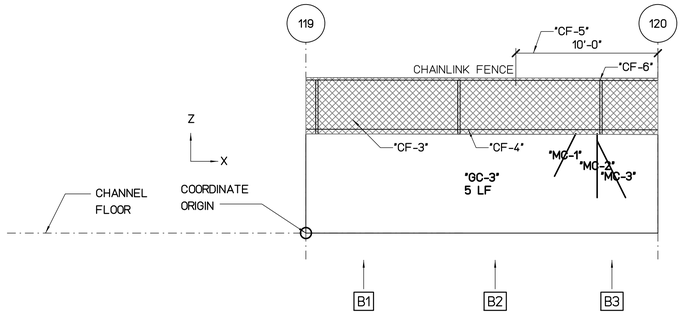


## WALL "B" FLATTEN VIEW

SCALE : 3/16" = 1'-0"

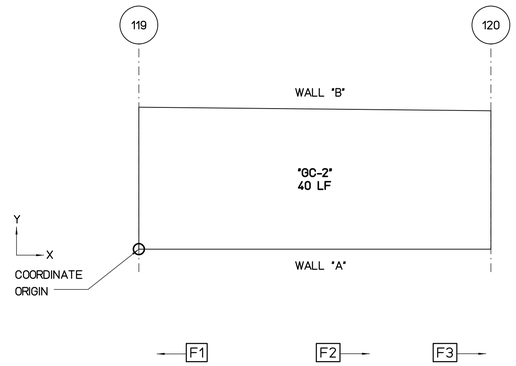


## FLOOR PLAN VIEW

SCALE : 3/16" = 1'-0"

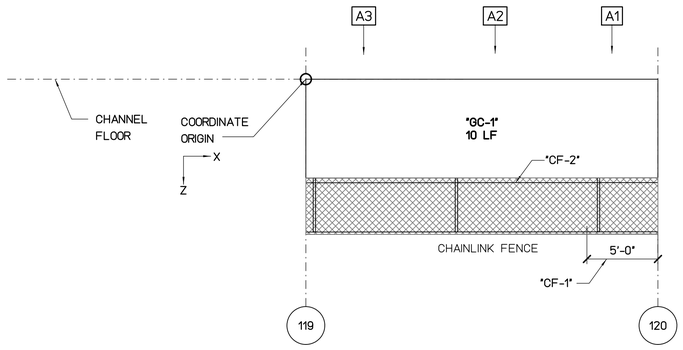


## WALL "A" FLATTEN VIEW

SCALE : 3/16" = 1'-0"

REPAIR LEGEND AND NOTES:

- [2] CRACK AND SPALL REPAIR TYPES, SEE SHEETS SR201 AND SR202 FOR DETAILS. TYPE [*] INDICATES NO-REPAIR
- (A) CHAINLINK FENCE REPAIR TYPES, SEE SHEETS SF201 AND SF202 FOR DETAILS
- 1.0 TOP OF WALL LEANING DISTANCE TOWARD CHANNEL IN INCHES, SEE SHEETS SL101 TO SL207 FOR CONCRETE LINING

PHOTO LEGEND:

- A1 WALL "A" ELEVATION PHOTO IDENTIFICATION SEE FLATTEN VIEW FOR PHOTO LOCATION
- B1 WALL "B" ELEVATION PHOTO IDENTIFICATION SEE FLATTEN VIEW FOR PHOTO LOCATION
- F1 CHANNEL FLOOR PHOTO IDENTIFICATION SEE FLOOR PLAN VIEW FOR PHOTO LOCATION

B1



B2



B3



F1



F2



F3



A1



A2



A3



### SPALL REPAIR CHART

| MARK | LOCATION | REPAIR TYPE | SPALL DIMENSION | | | SPALL VOLUME | SPALL CENTER COORDINATE | | RATING |
|---|---|---|---|---|---|---|---|---|---|
| | | | L | W | D | | X | Y OR Z | |
| | | | | | | | | | |
| | | | | | | | | | |
| | | | | | | | | | |
| | | | | | | | | | |
| | | | | | | | | | |
| | | | | | | | | | |
| | | | | | | | | | |
| | | | | | | | | | |

### CHAINLINK FENCE REPAIR CHART

| MARK | LOCATION | REPAIR TYPE | POSTS | TOP RAIL | BOTTOM WIRE | BRACE | FABRIC |
|---|---|---|---|---|---|---|---|
| "CF-1" | WALL "A" | (E) | - | - | - | - | DAMAGED 5'x4' |
| "CF-2" | WALL "A" | (D) | - | - | DAMAGED 25' | - | - |
| "CF-3" | WALL "B" | (E) | - | - | - | - | DAMAGED 25'x4' |
| "CF-4" | WALL "B" | (D) | - | - | DAMAGED 25' | - | - |
| "CF-5" | WALL "B" | (C) | - | BENT 10' | - | - | - |
| "CF-6" | WALL "B" | (A) | BENT 1 | - | - | - | - |
| | | | | | | | |
| | | | | | | | |
| | | | | | | | |
| | | | | | | | |

### CRACK REPAIR CHART

| MARK | LOCATION | REPAIR TYPE | GENERAL CRACKS (LF) | MAJOR CRACKS | | | | | | RATING |
|---|---|---|---|---|---|---|---|---|---|---|
| | | | | WIDTH (IN) | LENGTH (FT) | START PNT X | START PNT Y,Z | END PNT X | END PNT Y,Z | |
| "MC-1" | WALL "B" | [1] | - | 0.13 | 4 | 17.5 | 4 | 19 | 7 | 7 |
| "MC-2" | WALL "B" | [1] | - | 0.13 | 5 | 20.5 | 2.5 | 20.5 | 7 | 7 |
| "MC-3" | WALL "B" | [1] | - | 0.13 | 5 | 22.5 | 2.5 | 20.5 | 6.5 | 7 |
| "GC-1" | WALL "A" | [*] | 10 | - | - | - | - | - | - | 8 |
| "GC-2" | FLOOR | [*] | 40 | - | - | - | - | - | - | 8 |
| "GC-3" | WALL "B" | [*] | 5 | - | - | - | - | - | - | 9 |
| | | | | | | | | | | |

GRAPHIC SCALES:

0 1' 2' 4' 8' 12' 16'

3/16"=1'-0"

| REVISION NO. | DATE | REVISIONS | BY |
|---|---|---|---|
| | | | |

AETHER R. DAR
LICENSED PROFESSIONAL ENGINEER
No. 7808-S
HAWAII U.S.A.

Exp. Date: 4-30-20

THIS WORK WAS PREPARED BY ME OR UNDER MY SUPERVISION AND CONSTRUCTION OF THIS PROJECT WILL BE UNDER MY OBSERVATION

DEPARTMENT OF HAWAIIAN HOMELAND

# NANAKULI FLOOD CONTROL CHANNEL IMPROVEMENTS NANAKULI VALLEY, OAHU HAWAII

## CHANNEL SEGMENT [120] REPAIR DETAILS

| | |
|---|---|
| DESIGNED BY: | TTP |
| DRAWN BY: | AK, AP, DL |
| CHECKED BY: | AD |
| SUPV: | |
| DATE: | 03/05/2019 |

HAWAII ENGINEERING GROUP, Inc.
Civil & Structural Engineers
1088 BISHOP STREET #2506
HONOLULU, HI 96813
Tel: 808-533-2092

JOB NO.

SHEET C120

129 OF 225 SHTS

FILE ___ DRAWER ___ ___ FOLDER ___ ___

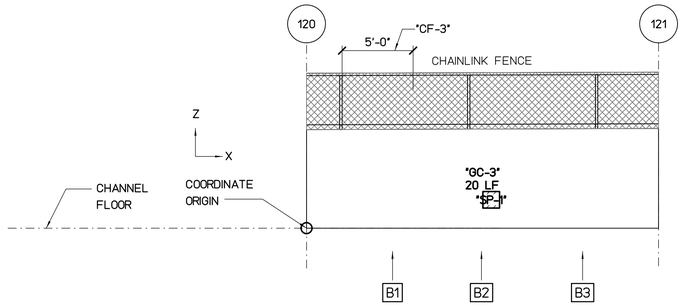


## WALL "B" FLATTEN VIEW

SCALE : 3/16" = 1'-0"

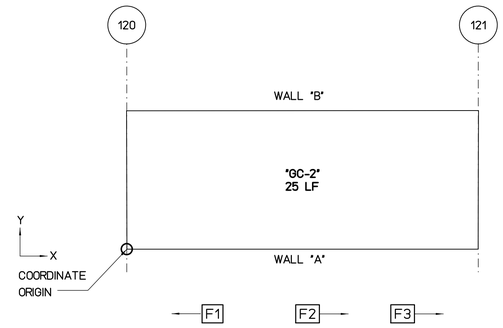


## FLOOR PLAN VIEW

SCALE : 3/16" = 1'-0"

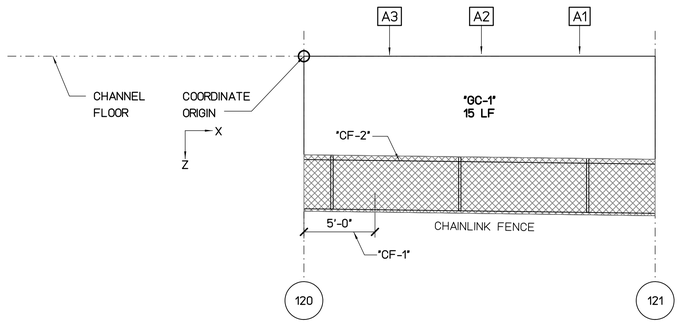


## WALL "A" FLATTEN VIEW

SCALE : 3/16" = 1'-0"

REPAIR LEGEND AND NOTES:

- 2 — CRACK AND SPALL REPAIR TYPES, SEE SHEETS SR201 AND SR202 FOR DETAILS. TYPE [*] INDICATES NO-REPAIR
- (A) — CHAINLINK FENCE REPAIR TYPES, SEE SHEETS SF201 AND SF202 FOR DETAILS
- 1.0 — TOP OF WALL LEANING DISTANCE TOWARD CHANNEL IN INCHES, SEE SHEETS SL101 TO SL207 FOR CONCRETE LINING

PHOTO LEGEND:

- A1 — WALL "A" ELEVATION PHOTO IDENTIFICATION SEE FLATTEN VIEW FOR PHOTO LOCATION
- B1 — WALL "B" ELEVATION PHOTO IDENTIFICATION SEE FLATTEN VIEW FOR PHOTO LOCATION
- F1 — CHANNEL FLOOR PHOTO IDENTIFICATION SEE FLOOR PLAN VIEW FOR PHOTO LOCATION

B1



B2



B3



F1



F2



F3



A1



A2



A3



### SPALL REPAIR CHART

| MARK | LOCATION | REPAIR TYPE | SPALL DIMENSION L | SPALL DIMENSION W | SPALL DIMENSION D | SPALL VOLUME | SPALL CENTER COORDINATE X | SPALL CENTER COORDINATE Y OR Z | RATING |
|---|---|---|---|---|---|---|---|---|---|
| "SP-1" | WALL "B" | 3 | 14 | 14 | 2 | 392 | 13 | 2 | 6 |

### CHAINLINK FENCE REPAIR CHART

| MARK | LOCATION | REPAIR TYPE | POSTS | TOP RAIL | BOTTOM WIRE | BRACE | FABRIC |
|---|---|---|---|---|---|---|---|
| "CF-1" | WALL "A" | (E) | - | - | - | - | DAMAGED 5'x4' |
| "CF-2" | WALL "A" | (D) | - | - | DAMAGED 25' | - | - |
| "CF-3" | WALL "B" | (E) | - | - | - | - | DAMAGED 5'x4' |

### CRACK REPAIR CHART

| MARK | LOCATION | REPAIR TYPE | GENERAL CRACKS (LF) | MAJOR CRACKS WIDTH (IN) | MAJOR CRACKS LENGTH (FT) | MAJOR CRACKS START PNT X | MAJOR CRACKS START PNT Y,Z | MAJOR CRACKS END PNT X | MAJOR CRACKS END PNT Y,Z | RATING |
|---|---|---|---|---|---|---|---|---|---|---|
| "GC-1" | WALL "A" | * | 15 | - | - | - | - | - | - | 8 |
| "GC-2" | FLOOR | * | 25 | - | - | - | - | - | - | 8 |
| "GC-3" | WALL "B" | * | 20 | - | - | - | - | - | - | 8 |

GRAPHIC SCALES:

0 1' 2' 4' 8' 12' 16'

3/16"=1'-0"

| REVISION NO. | DATE | REVISIONS | BY |
|---|---|---|---|

ATHER R. DAR
LICENSED PROFESSIONAL ENGINEER
No. 7808-S
HAWAII U.S.A.

Exp. Date: 4-30-20

THIS WORK WAS PREPARED BY ME OR UNDER MY SUPERVISION AND CONSTRUCTION OF THIS PROJECT WILL BE UNDER MY OBSERVATION

DEPARTMENT OF HAWAIIAN HOMELAND

# NANAKULI FLOOD CONTROL CHANNEL IMPROVEMENTS NANAKULI VALLEY, OAHU HAWAII

## CHANNEL SEGMENT 121 REPAIR DETAILS

| | |
|---|---|
| DESIGNED BY: | TTP |
| DRAWN BY: | AK, AP, DL |
| CHECKED BY: | AD |
| SUPV: | |
| DATE: | 03/05/2019 |


HAWAII ENGINEERING GROUP, Inc.
Civil & Structural Engineers
1088 BISHOP STREET #2506
HONOLULU, HI 96813
Tel: 808-533-2092


JOB NO.

SHEET C121

130 OF 225 SHTS

FILE ___ DRAWER ___ ___ FOLDER ___ ___

Plot date: 15-Apr-2020

Full Size Plot

Plot date: 15-Apr-2020
Full Size Plot

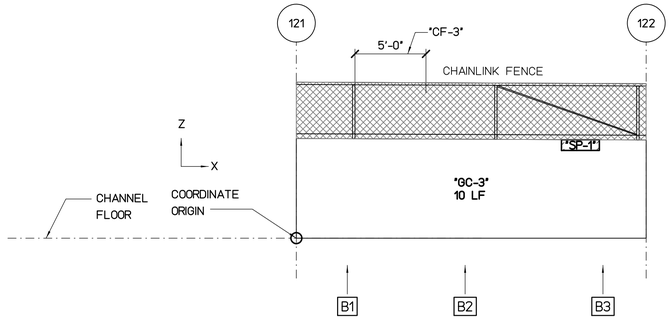


## WALL "B" FLATTEN VIEW

SCALE : 3/16" = 1'-0"

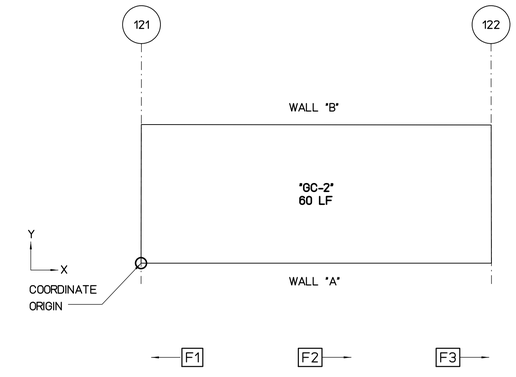


## FLOOR PLAN VIEW

SCALE : 3/16" = 1'-0"

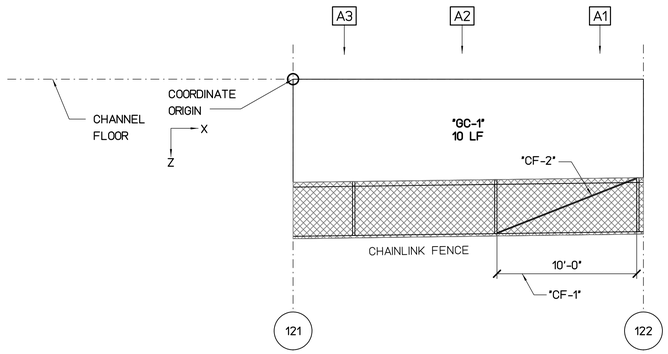


## WALL "A" FLATTEN VIEW

SCALE : 3/16" = 1'-0"

REPAIR LEGEND AND NOTES:

- [2] CRACK AND SPALL REPAIR TYPES, SEE SHEETS SR201 AND SR202 FOR DETAILS. TYPE [*] INDICATES NO-REPAIR
- (A) CHAINLINK FENCE REPAIR TYPES, SEE SHEETS SF201 AND SF202 FOR DETAILS
- 1.0 TOP OF WALL LEANING DISTANCE TOWARD CHANNEL IN INCHES, SEE SHEETS SL101 TO SL207 FOR CONCRETE LINING

PHOTO LEGEND:

- A1 WALL "A" ELEVATION PHOTO IDENTIFICATION SEE FLATTEN VIEW FOR PHOTO LOCATION
- B1 WALL "B" ELEVATION PHOTO IDENTIFICATION SEE FLATTEN VIEW FOR PHOTO LOCATION
- F1 CHANNEL FLOOR PHOTO IDENTIFICATION SEE FLOOR PLAN VIEW FOR PHOTO LOCATION

B1



B2



B3



F1



F2



F3



A1



A2



A3



### SPALL REPAIR CHART

| MARK | LOCATION | REPAIR TYPE | SPALL DIMENSION | | | SPALL VOLUME | SPALL CENTER COORDINATE | | RATING |
|---|---|---|---|---|---|---|---|---|---|
| | | | L | W | D | | X | Y OR Z | |
| "SP-1" | WALL "B" | [3] | 32 | 9 | 2 | 576 | 20 | 6.6 | 7 |

### CHAINLINK FENCE REPAIR CHART

| MARK | LOCATION | REPAIR TYPE | POSTS | TOP RAIL | BOTTOM WIRE | BRACE | FABRIC |
|---|---|---|---|---|---|---|---|
| "CF-1" | WALL "A" | (C) | - | DAMAGED 10' | - | - | - |
| "CF-2" | WALL "A" | (B) | - | - | - | BENT 1 | - |
| "CF-3" | WALL "B" | (E) | - | - | - | - | DAMAGED 5'x4' |

### CRACK REPAIR CHART

| MARK | LOCATION | REPAIR TYPE | GENERAL CRACKS (LF) | MAJOR CRACKS | | | | | | RATING |
|---|---|---|---|---|---|---|---|---|---|---|
| | | | | WIDTH (IN) | LENGTH (FT) | START PNT X | START PNT Y,Z | END PNT X | END PNT Y,Z | |
| "GC-1" | WALL "A" | [*] | 10 | - | - | - | - | - | - | 8 |
| "GC-2" | FLOOR | [*] | 60 | - | - | - | - | - | - | 8 |
| "GC-3" | WALL "B" | [*] | 10 | - | - | - | - | - | - | 8 |

GRAPHIC SCALES:

0 1' 2' 4' 8' 12' 16'

3/16"=1'-0"

| REVISION NO. | DATE | REVISIONS | BY |
|---|---|---|---|

ATHER R. DAR
LICENSED PROFESSIONAL ENGINEER
No. 7808-S
HAWAII U.S.A.
Exp. Date: 4-30-20

THIS WORK WAS PREPARED BY ME OR UNDER MY SUPERVISION AND CONSTRUCTION OF THIS PROJECT WILL BE UNDER MY OBSERVATION

DEPARTMENT OF HAWAIIAN HOMELAND

# NANAKULI FLOOD CONTROL CHANNEL IMPROVEMENTS NANAKULI VALLEY, OAHU HAWAII

## CHANNEL SEGMENT [122] REPAIR DETAILS

| | |
|---|---|
| DESIGNED BY: | TTP |
| DRAWN BY: | AK, AP, DL |
| CHECKED BY: | AD |
| SUPV: | |
| DATE: | 03/05/2019 |

HAWAII ENGINEERING GROUP, Inc.
Civil & Structural Engineers
1088 BISHOP STREET #2506
HONOLULU, HI 96813
Tel: 808-533-2092

JOB NO.

SHEET C122
131 OF 225 SHTS

FILE ___ DRAWER ___ ___ FOLDER ___ ___

Plot date: 15-Apr-2020
Full Size Plot

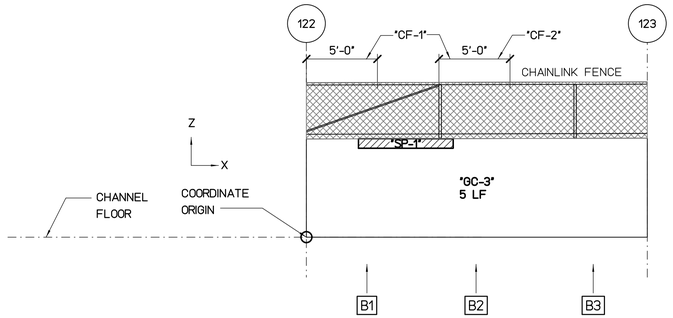


## WALL "B" FLATTEN VIEW

SCALE : 3/16" = 1'-0"

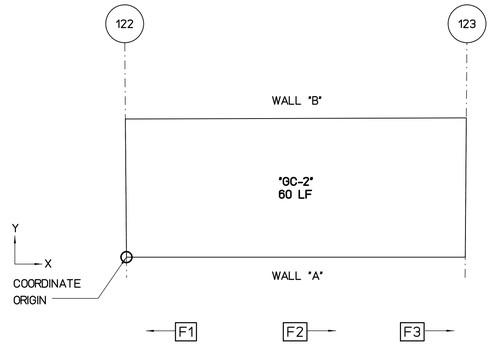


## FLOOR PLAN VIEW

SCALE : 3/16" = 1'-0"

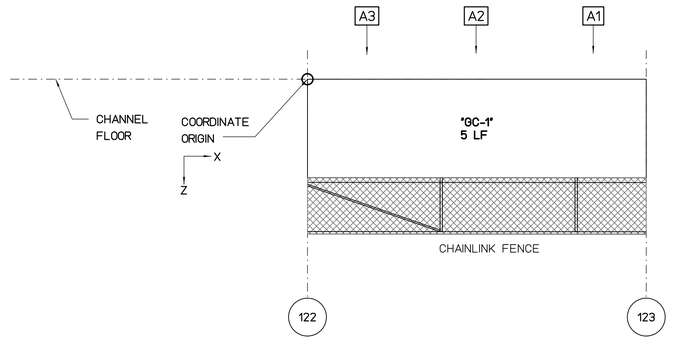


## WALL "A" FLATTEN VIEW

SCALE : 3/16" = 1'-0"

REPAIR LEGEND AND NOTES:

- [2] CRACK AND SPALL REPAIR TYPES, SEE SHEETS SR201 AND SR202 FOR DETAILS. TYPE [*] INDICATES NO-REPAIR
- (A) CHAINLINK FENCE REPAIR TYPES, SEE SHEETS SF201 AND SF202 FOR DETAILS
- 1.0 TOP OF WALL LEANING DISTANCE TOWARD CHANNEL IN INCHES, SEE SHEETS SL101 TO SL207 FOR CONCRETE LINING

PHOTO LEGEND:

- A1 WALL "A" ELEVATION PHOTO IDENTIFICATION SEE FLATTEN VIEW FOR PHOTO LOCATION
- B1 WALL "B" ELEVATION PHOTO IDENTIFICATION SEE FLATTEN VIEW FOR PHOTO LOCATION
- F1 CHANNEL FLOOR PHOTO IDENTIFICATION SEE FLOOR PLAN VIEW FOR PHOTO LOCATION

B1



B2



B3



F1



F2

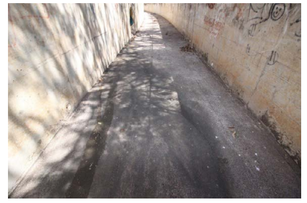

F3



A1



A2



A3



### SPALL REPAIR CHART

| MARK | LOCATION | REPAIR TYPE | SPALL DIMENSION L | SPALL DIMENSION W | SPALL DIMENSION D | SPALL VOLUME | SPALL CENTER COORDINATE X | SPALL CENTER COORDINATE Y OR Z | RATING |
|---|---|---|---|---|---|---|---|---|---|
| "SP-1" | WALL "B" | [3] | 60 | 8 | 2 | 1280 | 7 | 6.6 | 7 |

### CHAINLINK FENCE REPAIR CHART

| MARK | LOCATION | REPAIR TYPE | POSTS | TOP RAIL | BOTTOM WIRE | BRACE | FABRIC |
|---|---|---|---|---|---|---|---|
| "CF-1" | WALL "B" | (C) | - | DAMAGED 10' | - | - | - |
| "CF-2" | WALL "B" | (E) | - | - | - | - | DAMAGED 5'x4' |

### CRACK REPAIR CHART

| MARK | LOCATION | REPAIR TYPE | GENERAL CRACKS (LF) | MAJOR CRACKS WIDTH (IN) | MAJOR CRACKS LENGTH (FT) | MAJOR CRACKS START PNT X | MAJOR CRACKS START PNT Y,Z | MAJOR CRACKS END PNT X | MAJOR CRACKS END PNT Y,Z | RATING |
|---|---|---|---|---|---|---|---|---|---|---|
| "GC-1" | WALL "A" | [*] | 5 | - | - | - | - | - | - | 9 |
| "GC-2" | FLOOR | [*] | 60 | - | - | - | - | - | - | 8 |
| "GC-3" | WALL "B" | [*] | 5 | - | - | - | - | - | - | 9 |

GRAPHIC SCALES:

0 1' 2' 4' 8' 12' 16'

3/16"=1'-0"

| REVISION NO. | DATE | REVISIONS | BY |
|---|---|---|---|

ATHER R. DAR
LICENSED PROFESSIONAL ENGINEER
No. 7808-S
HAWAII U.S.A.
Exp. Date: 4-30-20

THIS WORK WAS PREPARED BY ME OR UNDER MY SUPERVISION AND CONSTRUCTION OF THIS PROJECT WILL BE UNDER MY OBSERVATION

DEPARTMENT OF HAWAIIAN HOMELAND

# NANAKULI FLOOD CONTROL CHANNEL IMPROVEMENTS NANAKULI VALLEY, OAHU HAWAII

CHANNEL SEGMENT [123] REPAIR DETAILS

| | |
|---|---|
| DESIGNED BY: | TTP |
| DRAWN BY: | AK, AP, DL |
| CHECKED BY: | AD |
| SUPV: | |
| DATE: | 03/05/2019 |

HAWAII ENGINEERING GROUP, Inc.
Civil & Structural Engineers
1088 BISHOP STREET #2506
HONOLULU, HI 96813
Tel: 808-533-2092

JOB NO.

SHEET C123

132 OF 225 SHTS

FILE ___ DRAWER ___ ___ FOLDER ___ ___

Plot date: 15-Apr-2020
Full Size Plot

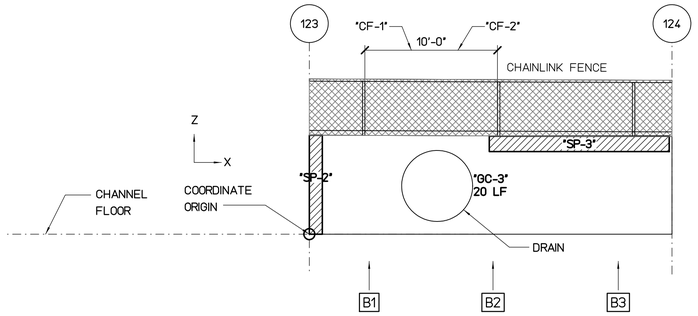


## WALL "B" FLATTEN VIEW

SCALE : 3/16" = 1'-0"

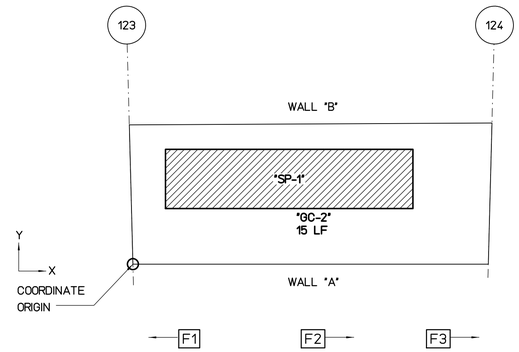


## FLOOR PLAN VIEW

SCALE : 3/16" = 1'-0"

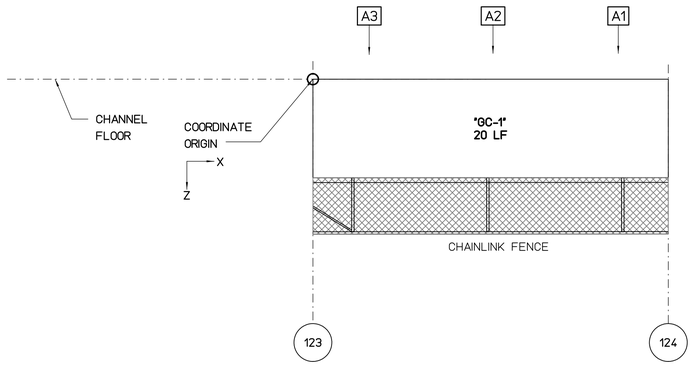


## WALL "A" FLATTEN VIEW

SCALE : 3/16" = 1'-0"

REPAIR LEGEND AND NOTES:

- 2 — CRACK AND SPALL REPAIR TYPES, SEE SHEETS SR201 AND SR202 FOR DETAILS. TYPE [*] INDICATES NO-REPAIR
- (A) — CHAINLINK FENCE REPAIR TYPES, SEE SHEETS SF201 AND SF202 FOR DETAILS
- 1.0 — TOP OF WALL LEANING DISTANCE TOWARD CHANNEL IN INCHES, SEE SHEETS SL101 TO SL207 FOR CONCRETE LINING

PHOTO LEGEND:

- A1 — WALL "A" ELEVATION PHOTO IDENTIFICATION SEE FLATTEN VIEW FOR PHOTO LOCATION
- B1 — WALL "B" ELEVATION PHOTO IDENTIFICATION SEE FLATTEN VIEW FOR PHOTO LOCATION
- F1 — CHANNEL FLOOR PHOTO IDENTIFICATION SEE FLOOR PLAN VIEW FOR PHOTO LOCATION

B1



B2



B3



F1



F2



F3



A1



A2



A3



### SPALL REPAIR CHART

| MARK | LOCATION | REPAIR TYPE | SPALL DIMENSION L | SPALL DIMENSION W | SPALL DIMENSION D | SPALL VOLUME | SPALL CENTER COORDINATE X | SPALL CENTER COORDINATE Y OR Z | RATING |
|---|---|---|---|---|---|---|---|---|---|
| "SP-1" | FLOOR | 3 | 209 | 50 | 2 | 20900 | 11 | 6 | 5 |
| "SP-2" | WALL "B" | 3 | 11 | 84 | 2 | 2112 | 0.5 | 4 | 4 |
| "SP-3" | WALL "B" | 3 | 152 | 13 | 2 | 3952 | 19 | 6.4 | 7 |

### CHAINLINK FENCE REPAIR CHART

| MARK | LOCATION | REPAIR TYPE | POSTS | TOP RAIL | BOTTOM WIRE | BRACE | FABRIC |
|---|---|---|---|---|---|---|---|
| "CF-1" | WALL "B" | (E) | - | - | - | - | DAMAGED 10'x4' |
| "CF-2" | WALL "B" | (C) | - | BENT 10' | - | - | - |

### CRACK REPAIR CHART

| MARK | LOCATION | REPAIR TYPE | GENERAL CRACKS (LF) | MAJOR CRACKS WIDTH (IN) | MAJOR CRACKS LENGTH (FT) | MAJOR CRACKS START PNT X | MAJOR CRACKS START PNT Y,Z | MAJOR CRACKS END PNT X | MAJOR CRACKS END PNT Y,Z | RATING |
|---|---|---|---|---|---|---|---|---|---|---|
| "GC-1" | WALL "A" | * | 20 | - | - | - | - | - | - | 8 |
| "GC-2" | FLOOR | * | 15 | - | - | - | - | - | - | 8 |
| "GC-3" | WALL "B" | * | 20 | - | - | - | - | - | - | 8 |

GRAPHIC SCALES:

0 1' 2' 4' 8' 12' 16'

3/16"=1'-0"

| REVISION NO. | DATE | REVISIONS | BY |
|---|---|---|---|

ATHER R. DAR
LICENSED PROFESSIONAL ENGINEER
No. 7808-S
HAWAII U.S.A.
Exp. Date: 4-30-20

THIS WORK WAS PREPARED BY ME OR UNDER MY SUPERVISION AND CONSTRUCTION OF THIS PROJECT WILL BE UNDER MY OBSERVATION

DEPARTMENT OF HAWAIIAN HOMELAND

# NANAKULI FLOOD CONTROL CHANNEL IMPROVEMENTS NANAKULI VALLEY, OAHU HAWAII

CHANNEL SEGMENT 124 REPAIR DETAILS

| | |
|---|---|
| DESIGNED BY: | TTP |
| DRAWN BY: | AK, AP, DL |
| CHECKED BY: | AD |
| SUPV: | |
| DATE: | 03/05/2019 |

HAWAII ENGINEERING GROUP, Inc.
Civil & Structural Engineers
1088 BISHOP STREET #2506
HONOLULU, HI 96813
Tel: 808-533-2092

JOB NO.

SHEET C124
133 OF 225 SHTS

FILE ___ DRAWER ___ ___ FOLDER ___ ___

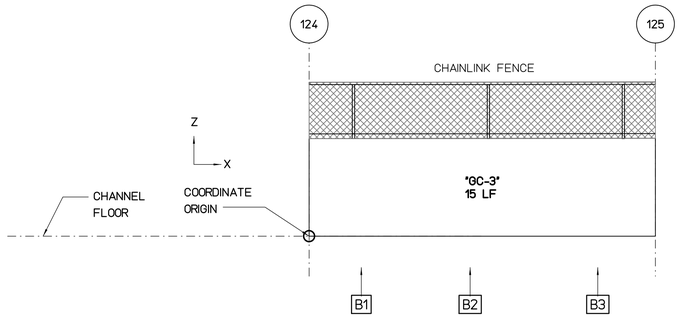


## WALL "B" FLATTEN VIEW

SCALE : 3/16" = 1'-0"

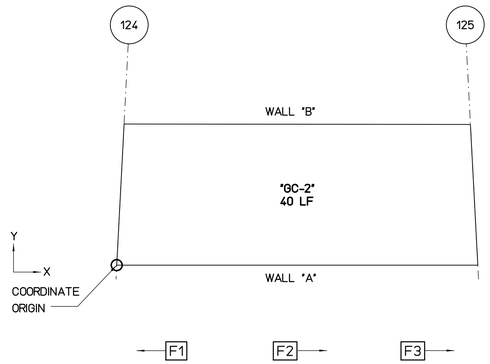


## FLOOR PLAN VIEW

SCALE : 3/16" = 1'-0"

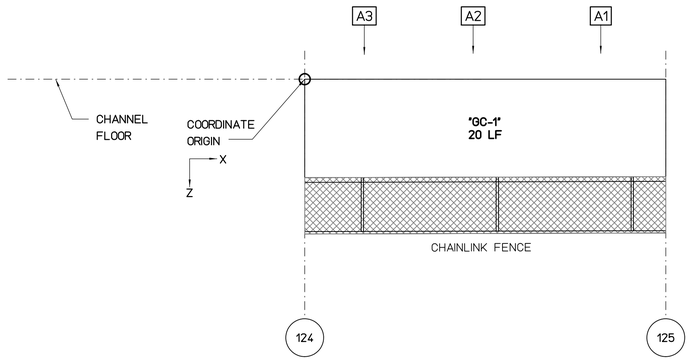


## WALL "A" FLATTEN VIEW

SCALE : 3/16" = 1'-0"

REPAIR LEGEND AND NOTES:

- 2 — CRACK AND SPALL REPAIR TYPES, SEE SHEETS SR201 AND SR202 FOR DETAILS. TYPE [*] INDICATES NO-REPAIR
- (A) — CHAINLINK FENCE REPAIR TYPES, SEE SHEETS SF201 AND SF202 FOR DETAILS
- 1.0 — TOP OF WALL LEANING DISTANCE TOWARD CHANNEL IN INCHES, SEE SHEETS SL101 TO SL207 FOR CONCRETE LINING

PHOTO LEGEND:

- A1 — WALL "A" ELEVATION PHOTO IDENTIFICATION SEE FLATTEN VIEW FOR PHOTO LOCATION
- B1 — WALL "B" ELEVATION PHOTO IDENTIFICATION SEE FLATTEN VIEW FOR PHOTO LOCATION
- F1 — CHANNEL FLOOR PHOTO IDENTIFICATION SEE FLOOR PLAN VIEW FOR PHOTO LOCATION

B1



B2



B3



F1



F2



F3



A1



A2



A3



### SPALL REPAIR CHART

| MARK | LOCATION | REPAIR TYPE | SPALL DIMENSION | | | SPALL VOLUME | SPALL CENTER COORDINATE | | RATING |
|---|---|---|---|---|---|---|---|---|---|
| | | | L | W | D | | X | Y OR Z | |
| | | | | | | | | | |
| | | | | | | | | | |
| | | | | | | | | | |
| | | | | | | | | | |
| | | | | | | | | | |
| | | | | | | | | | |
| | | | | | | | | | |
| | | | | | | | | | |

### CHAINLINK FENCE REPAIR CHART

| MARK | LOCATION | REPAIR TYPE | POSTS | TOP RAIL | BOTTOM WIRE | BRACE | FABRIC |
|---|---|---|---|---|---|---|---|
| | | | | | | | |
| | | | | | | | |
| | | | | | | | |
| | | | | | | | |
| | | | | | | | |
| | | | | | | | |
| | | | | | | | |
| | | | | | | | |
| | | | | | | | |

### CRACK REPAIR CHART

| MARK | LOCATION | REPAIR TYPE | GENERAL CRACKS (LF) | MAJOR CRACKS | | | | | | RATING |
|---|---|---|---|---|---|---|---|---|---|---|
| | | | | WIDTH (IN) | LENGTH (FT) | START PNT X | START PNT Y,Z | END PNT X | END PNT Y,Z | |
| "GC-1" | WALL "A" | [*] | 20 | - | - | - | - | - | - | 8 |
| "GC-2" | FLOOR | [*] | 40 | - | - | - | - | - | - | 8 |
| "GC-3" | WALL "B" | [*] | 15 | - | - | - | - | - | - | 8 |
| | | | | | | | | | | |
| | | | | | | | | | | |
| | | | | | | | | | | |
| | | | | | | | | | | |

GRAPHIC SCALES:

0 1' 2' 4' 8' 12' 16'

3/16"=1'-0"

| REVISION NO. | DATE | REVISIONS | BY |
|---|---|---|---|
| | | | |

ATHER R. DAR
LICENSED PROFESSIONAL ENGINEER
No. 7808-S
HAWAII U.S.A.

Exp. Date: 4-30-20

THIS WORK WAS PREPARED BY ME OR UNDER MY SUPERVISION AND CONSTRUCTION OF THIS PROJECT WILL BE UNDER MY OBSERVATION

DEPARTMENT OF HAWAIIAN HOMELAND

# NANAKULI FLOOD CONTROL CHANNEL IMPROVEMENTS NANAKULI VALLEY, OAHU HAWAII

CHANNEL SEGMENT [125] REPAIR DETAILS

| | |
|---|---|
| DESIGNED BY: | TTP |
| DRAWN BY: | AK, AP, DL |
| CHECKED BY: | AD |
| SUPV: | |
| DATE: | 03/05/2019 |


HAWAII ENGINEERING GROUP, Inc.
Civil & Structural Engineers
1088 BISHOP STREET #2506
HONOLULU, HI 96813
Tel: 808-533-2092


JOB NO.

SHEET C125

134 OF 225 SHTS

FILE ___ DRAWER ___ ___ FOLDER ___ ___

Plot date: 15-Apr-2020

Full Size Plot

Plot date: 15-Apr-2020
Full Size Plot

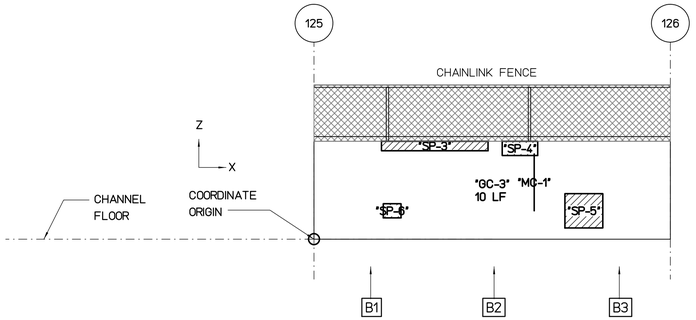


## WALL "B" FLATTEN VIEW

SCALE : 3/16" = 1'-0"

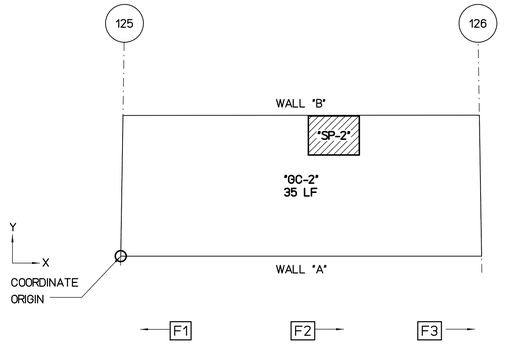


## FLOOR PLAN VIEW

SCALE : 3/16" = 1'-0"

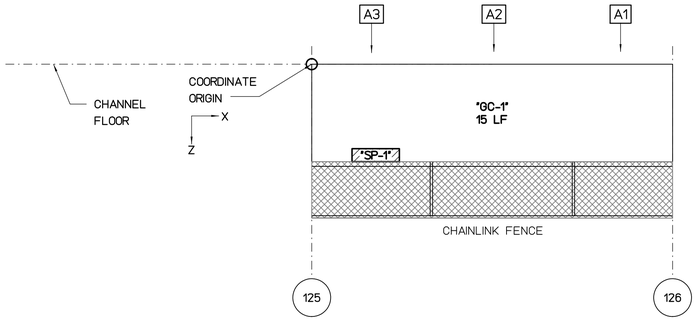


## WALL "A" FLATTEN VIEW

SCALE : 3/16" = 1'-0"

REPAIR LEGEND AND NOTES:

- 2 — CRACK AND SPALL REPAIR TYPES, SEE SHEETS SR201 AND SR202 FOR DETAILS. TYPE [*] INDICATES NO-REPAIR
- (A) — CHAINLINK FENCE REPAIR TYPES, SEE SHEETS SF201 AND SF202 FOR DETAILS
- 1.0 — TOP OF WALL LEANING DISTANCE TOWARD CHANNEL IN INCHES, SEE SHEETS SL101 TO SL207 FOR CONCRETE LINING

PHOTO LEGEND:

- A1 — WALL "A" ELEVATION PHOTO IDENTIFICATION SEE FLATTEN VIEW FOR PHOTO LOCATION
- B1 — WALL "B" ELEVATION PHOTO IDENTIFICATION SEE FLATTEN VIEW FOR PHOTO LOCATION
- F1 — CHANNEL FLOOR PHOTO IDENTIFICATION SEE FLOOR PLAN VIEW FOR PHOTO LOCATION

B1



B2



B3



F1



F2



F3



A1



A2



A3



### SPALL REPAIR CHART

| MARK | LOCATION | REPAIR TYPE | SPALL DIMENSION L | SPALL DIMENSION W | SPALL DIMENSION D | SPALL VOLUME | SPALL CENTER COORDINATE X | SPALL CENTER COORDINATE Y OR Z | RATING |
|---|---|---|---|---|---|---|---|---|---|
| "SP-1" | WALL "A" | 3 | 40 | 11 | 2 | 880 | 4.5 | 6.4 | 7 |
| "SP-2" | FLOOR | 3 | 43 | 33 | 2 | 2838 | 15 | 8.5 | 7 |
| "SP-3" | WALL "B" | 3 | 90 | 8 | 2 | 1440 | 8.5 | 6.6 | 7 |
| "SP-4" | WALL "B" | 3 | 30 | 12 | 2 | 720 | 14.5 | 6.4 | 7 |
| "SP-5" | WALL "B" | 3 | 32 | 29 | 2 | 1856 | 19 | 2 | 5 |
| "SP-6" | WALL "B" | 3 | 15 | 12 | 2 | 360 | 5.5 | 2 | 7 |

### CHAINLINK FENCE REPAIR CHART

| MARK | LOCATION | REPAIR TYPE | POSTS | TOP RAIL | BOTTOM WIRE | BRACE | FABRIC |
|---|---|---|---|---|---|---|---|

### CRACK REPAIR CHART

| MARK | LOCATION | REPAIR TYPE | GENERAL CRACKS (LF) | MAJOR CRACKS WIDTH (IN) | MAJOR CRACKS LENGTH (FT) | MAJOR CRACKS START PNT X | MAJOR CRACKS START PNT Y,Z | MAJOR CRACKS END PNT X | MAJOR CRACKS END PNT Y,Z | RATING |
|---|---|---|---|---|---|---|---|---|---|---|
| "MC-1" | WALL "B" | 1 | - | 0.13 | 4 | 15.5 | 2 | 15.5 | 6 | 7 |
| "GC-1" | WALL "A" | * | 15 | - | - | - | - | - | - | 8 |
| "GC-2" | FLOOR | * | 35 | - | - | - | - | - | - | 8 |
| "GC-3" | WALL "B" | * | 10 | - | - | - | - | - | - | 8 |

GRAPHIC SCALES:

0 1' 2' 4' 8' 12' 16'

3/16"=1'-0"

| REVISION NO. | DATE | REVISIONS | BY |
|---|---|---|---|

ATHER R. DAR
LICENSED PROFESSIONAL ENGINEER
No. 7808-S
HAWAII U.S.A.
Exp. Date: 4-30-20

THIS WORK WAS PREPARED BY ME OR UNDER MY SUPERVISION AND CONSTRUCTION OF THIS PROJECT WILL BE UNDER MY OBSERVATION

DEPARTMENT OF HAWAIIAN HOMELAND

# NANAKULI FLOOD CONTROL CHANNEL IMPROVEMENTS NANAKULI VALLEY, OAHU HAWAII

CHANNEL SEGMENT 126 REPAIR DETAILS

| | |
|---|---|
| DESIGNED BY: | TTP |
| DRAWN BY: | AK, AP, DL |
| CHECKED BY: | AD |
| SUPV: | |
| DATE: | 03/05/2019 |

HAWAII ENGINEERING GROUP, Inc.
Civil & Structural Engineers
1088 BISHOP STREET #2506
HONOLULU, HI 96813
Tel: 808-533-2092

JOB NO.

SHEET C126
135 OF 225 SHTS

FILE ___ DRAWER ___ ___ FOLDER ___ ___

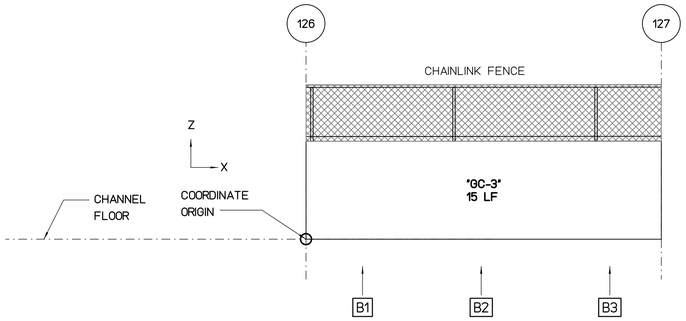


## WALL "B" FLATTEN VIEW

SCALE : 3/16" = 1'-0"

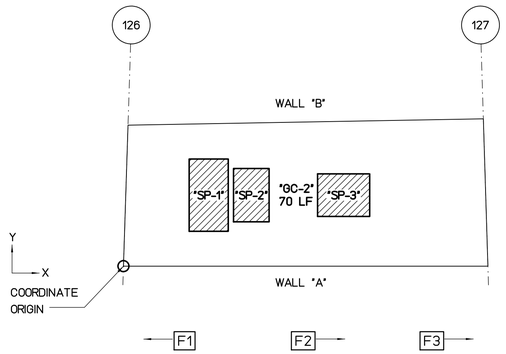


## FLOOR PLAN VIEW

SCALE : 3/16" = 1'-0"

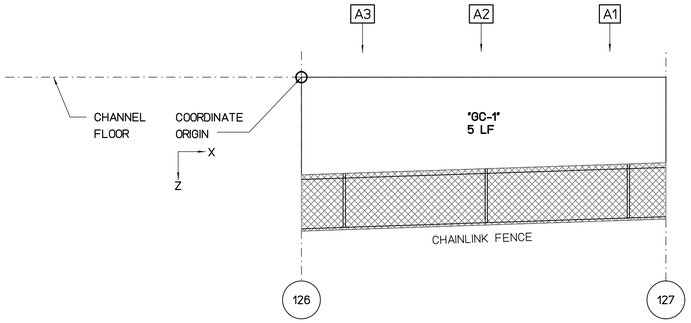


## WALL "A" FLATTEN VIEW

SCALE : 3/16" = 1'-0"

REPAIR LEGEND AND NOTES:

- 2 — CRACK AND SPALL REPAIR TYPES, SEE SHEETS SR201 AND SR202 FOR DETAILS. TYPE * INDICATES NO-REPAIR
- A — CHAINLINK FENCE REPAIR TYPES, SEE SHEETS SF201 AND SF202 FOR DETAILS
- 1.0 — TOP OF WALL LEANING DISTANCE TOWARD CHANNEL IN INCHES, SEE SHEETS SL101 TO SL207 FOR CONCRETE LINING

PHOTO LEGEND:

- A1 — WALL "A" ELEVATION PHOTO IDENTIFICATION SEE FLATTEN VIEW FOR PHOTO LOCATION
- B1 — WALL "B" ELEVATION PHOTO IDENTIFICATION SEE FLATTEN VIEW FOR PHOTO LOCATION
- F1 — CHANNEL FLOOR PHOTO IDENTIFICATION SEE FLOOR PLAN VIEW FOR PHOTO LOCATION

B1



B2



B3



F1



F2

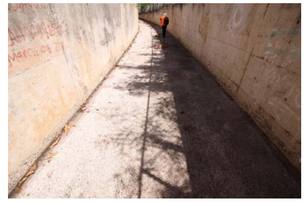

F3



A1



A2



A3



### SPALL REPAIR CHART

| MARK | LOCATION | REPAIR TYPE | SPALL DIMENSION L | SPALL DIMENSION W | SPALL DIMENSION D | SPALL VOLUME | SPALL CENTER COORDINATE X | SPALL CENTER COORDINATE Y OR Z | RATING |
|---|---|---|---|---|---|---|---|---|---|
| "SP-1" | FLOOR | 3 | 33 | 61 | 2 | 4026 | 6 | 5 | 7 |
| "SP-2" | FLOOR | 3 | 30 | 45 | 2 | 2700 | 9 | 5 | 7 |
| "SP-3" | FLOOR | 3 | 44 | 36 | 2 | 3168 | 15.5 | 5 | 7 |

### CHAINLINK FENCE REPAIR CHART

| MARK | LOCATION | REPAIR TYPE | POSTS | TOP RAIL | BOTTOM WIRE | BRACE | FABRIC |
|---|---|---|---|---|---|---|---|

### CRACK REPAIR CHART

| MARK | LOCATION | REPAIR TYPE | GENERAL CRACKS (LF) | MAJOR CRACKS WIDTH (IN) | MAJOR CRACKS LENGTH (FT) | MAJOR CRACKS START PNT X | MAJOR CRACKS START PNT Y,Z | MAJOR CRACKS END PNT X | MAJOR CRACKS END PNT Y,Z | RATING |
|---|---|---|---|---|---|---|---|---|---|---|
| "GC-1" | WALL "A" | * | 5 | - | - | - | - | - | - | 9 |
| "GC-2" | FLOOR | * | 70 | - | - | - | - | - | - | 8 |
| "GC-3" | WALL "B" | * | 15 | - | - | - | - | - | - | 8 |

GRAPHIC SCALES:

0 1' 2' 4' 8' 12' 16'

3/16"=1'-0"

| REVISION NO. | DATE | REVISIONS | BY |
|---|---|---|---|

ATHER R. DAR
LICENSED PROFESSIONAL ENGINEER
No. 7808-S
HAWAII U.S.A.

Exp. Date: 4-30-20

THIS WORK WAS PREPARED BY ME OR UNDER MY SUPERVISION AND CONSTRUCTION OF THIS PROJECT WILL BE UNDER MY OBSERVATION

DEPARTMENT OF HAWAIIAN HOMELAND

# NANAKULI FLOOD CONTROL CHANNEL IMPROVEMENTS NANAKULI VALLEY, OAHU HAWAII

## CHANNEL SEGMENT 127 REPAIR DETAILS

| | |
|---|---|
| DESIGNED BY: | TTP |
| DRAWN BY: | AK, AP, DL |
| CHECKED BY: | AD |
| SUPV: | |
| DATE: | 03/05/2019 |


HAWAII ENGINEERING GROUP, Inc.
Civil & Structural Engineers
1088 BISHOP STREET #2506
HONOLULU, HI 96813
Tel: 808-533-2092


JOB NO.

SHEET C127

136 OF 225 SHTS

FILE ___ DRAWER ___ ___ FOLDER ___ ___

Plot date: 15-Apr-2020

Full Size Plot

Plot date: 15-Apr-2020
Full Size Plot

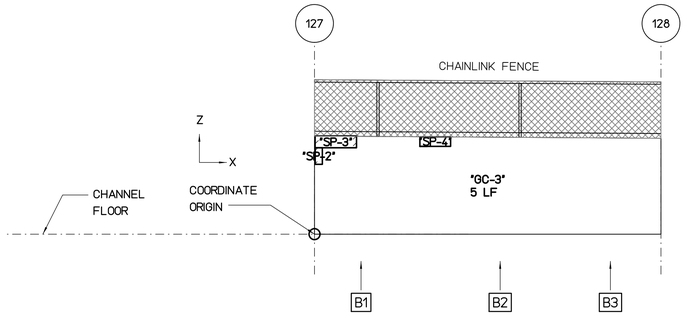


## WALL "B" FLATTEN VIEW

SCALE : 3/16" = 1'-0"

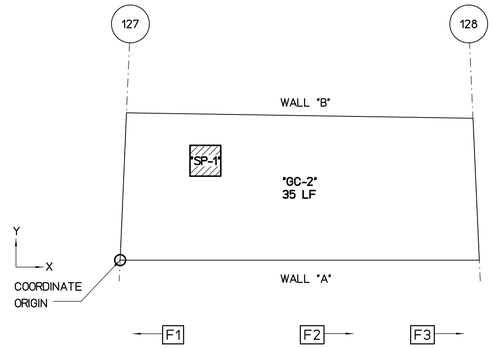


## FLOOR PLAN VIEW

SCALE : 3/16" = 1'-0"

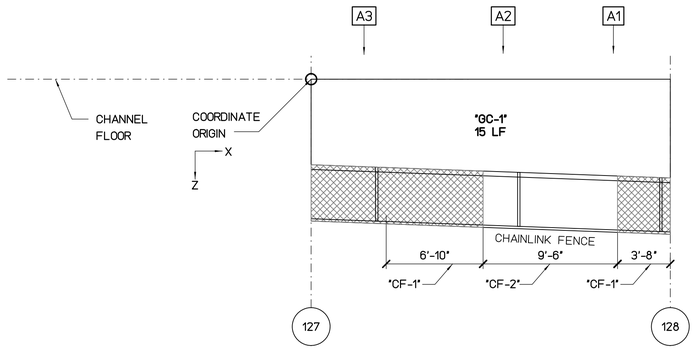


## WALL "A" FLATTEN VIEW

SCALE : 3/16" = 1'-0"

REPAIR LEGEND AND NOTES:

- [2] CRACK AND SPALL REPAIR TYPES, SEE SHEETS SR201 AND SR202 FOR DETAILS. TYPE [*] INDICATES NO-REPAIR
- (A) CHAINLINK FENCE REPAIR TYPES, SEE SHEETS SF201 AND SF202 FOR DETAILS
- 1.0> TOP OF WALL LEANING DISTANCE TOWARD CHANNEL IN INCHES, SEE SHEETS SL101 TO SL207 FOR CONCRETE LINING

PHOTO LEGEND:

- [A1] WALL "A" ELEVATION PHOTO IDENTIFICATION SEE FLATTEN VIEW FOR PHOTO LOCATION
- [B1] WALL "B" ELEVATION PHOTO IDENTIFICATION SEE FLATTEN VIEW FOR PHOTO LOCATION
- [F1] CHANNEL FLOOR PHOTO IDENTIFICATION SEE FLOOR PLAN VIEW FOR PHOTO LOCATION

B1



B2



B3



F1



F2



F3



A1



A2



A3



### SPALL REPAIR CHART

| MARK | LOCATION | REPAIR TYPE | SPALL DIMENSION L | SPALL DIMENSION W | SPALL DIMENSION D | SPALL VOLUME | SPALL CENTER COORDINATE X | SPALL CENTER COORDINATE Y OR Z | RATING |
|---|---|---|---|---|---|---|---|---|---|
| "SP-1" | FLOOR | [3] | 26 | 26 | 2 | 1352 | 6 | 7 | 7 |
| "SP-2" | WALL "B" | [3] | 6 | 14 | 2 | 168 | 0.3 | 5.5 | 7 |
| "SP-3" | WALL "B" | [3] | 35 | 10 | 2 | 700 | 1.5 | 6.5 | 7 |
| "SP-4" | WALL "B" | [3] | 26 | 8 | 2 | 416 | 8.5 | 6.5 | 7 |

### CHAINLINK FENCE REPAIR CHART

| MARK | LOCATION | REPAIR TYPE | POSTS | TOP RAIL | BOTTOM WIRE | BRACE | FABRIC |
|---|---|---|---|---|---|---|---|
| "CF-1" | WALL "A" | (E) | - | - | - | - | DAMAGED 10'-6"x4' |
| "CF-2" | WALL "A" | (E) | - | - | - | - | MISSING 9'-6"x4' |

### CRACK REPAIR CHART

| MARK | LOCATION | REPAIR TYPE | GENERAL CRACKS (LF) | MAJOR CRACKS WIDTH (IN) | MAJOR CRACKS LENGTH (FT) | MAJOR CRACKS START PNT X | MAJOR CRACKS START PNT Y,Z | MAJOR CRACKS END PNT X | MAJOR CRACKS END PNT Y,Z | RATING |
|---|---|---|---|---|---|---|---|---|---|---|
| "GC-1" | WALL "A" | [*] | 15 | - | - | - | - | - | - | 8 |
| "GC-2" | FLOOR | [*] | 35 | - | - | - | - | - | - | 8 |
| "GC-3" | WALL "B" | [*] | 5 | - | - | - | - | - | - | 9 |

GRAPHIC SCALES:

0 1' 2' 4' 8' 12' 16'

3/16"=1'-0"

| REVISION NO. | DATE | REVISIONS | BY |
|---|---|---|---|

ATHER R. DAR
LICENSED PROFESSIONAL ENGINEER
No. 7808-S
HAWAII U.S.A.
Exp. Date: 4-30-20

THIS WORK WAS PREPARED BY ME OR UNDER MY SUPERVISION AND CONSTRUCTION OF THIS PROJECT WILL BE UNDER MY OBSERVATION

DEPARTMENT OF HAWAIIAN HOMELAND

# NANAKULI FLOOD CONTROL CHANNEL IMPROVEMENTS NANAKULI VALLEY, OAHU HAWAII

CHANNEL SEGMENT [128] REPAIR DETAILS

| | |
|---|---|
| DESIGNED BY: | TTP |
| DRAWN BY: | AK, AP, DL |
| CHECKED BY: | AD |
| SUPV: | |
| DATE: | 03/05/2019 |

HAWAII ENGINEERING GROUP, Inc.
Civil & Structural Engineers
1088 BISHOP STREET #2506
HONOLULU, HI 96813
Tel: 808-533-2092

JOB NO.

SHEET C128
137 OF 225 SHTS

FILE ___ DRAWER ___ ___ FOLDER ___ ___

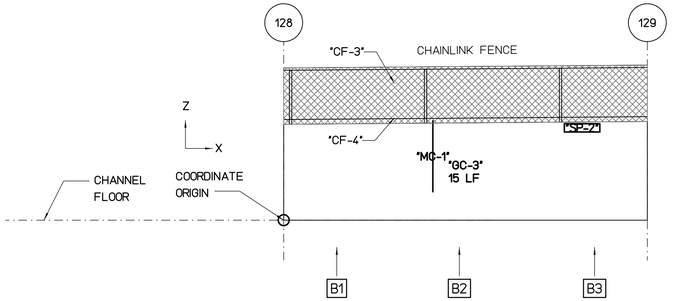


## WALL "B" FLATTEN VIEW

SCALE : 3/16" = 1'-0"

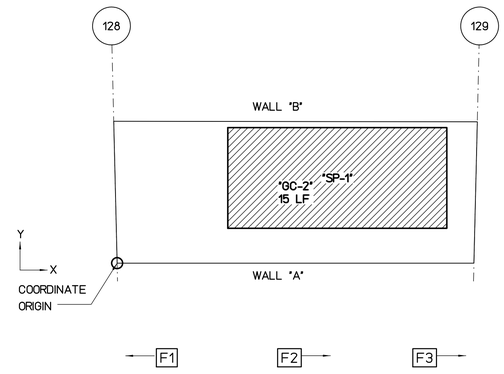


## FLOOR PLAN VIEW

SCALE : 3/16" = 1'-0"

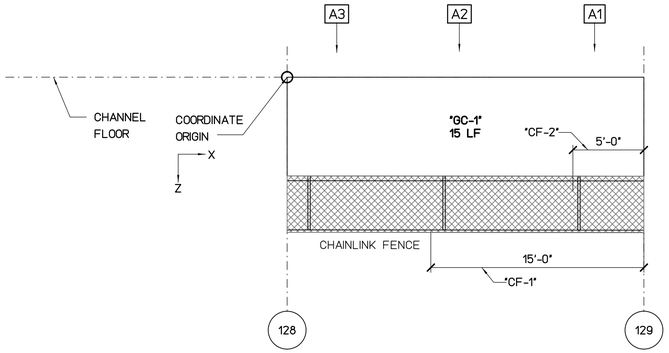


## WALL "A" FLATTEN VIEW

SCALE : 3/16" = 1'-0"

REPAIR LEGEND AND NOTES:

- [2] CRACK AND SPALL REPAIR TYPES, SEE SHEETS SR201 AND SR202 FOR DETAILS. TYPE [*] INDICATES NO-REPAIR
- (A) CHAINLINK FENCE REPAIR TYPES, SEE SHEETS SF201 AND SF202 FOR DETAILS
- [1.0] TOP OF WALL LEANING DISTANCE TOWARD CHANNEL IN INCHES, SEE SHEETS SL101 TO SL207 FOR CONCRETE LINING

PHOTO LEGEND:

- [A1] WALL "A" ELEVATION PHOTO IDENTIFICATION SEE FLATTEN VIEW FOR PHOTO LOCATION
- [B1] WALL "B" ELEVATION PHOTO IDENTIFICATION SEE FLATTEN VIEW FOR PHOTO LOCATION
- [F1] CHANNEL FLOOR PHOTO IDENTIFICATION SEE FLOOR PLAN VIEW FOR PHOTO LOCATION

B1



B2



B3



F1



F2



F3



A1



A2



A3



### SPALL REPAIR CHART

| MARK | LOCATION | REPAIR TYPE | SPALL DIMENSION L | SPALL DIMENSION W | SPALL DIMENSION D | SPALL VOLUME | SPALL CENTER COORDINATE X | SPALL CENTER COORDINATE Y OR Z | RATING |
|---|---|---|---|---|---|---|---|---|---|
| "SP-1" | FLOOR | [3] | 185 | 85 | 2 | 31450 | 15.5 | 6 | 7 |
| "SP-2" | WALL "B" | [3] | 30 | 7 | 2 | 420 | 21 | 6.5 | 7 |

### CHAINLINK FENCE REPAIR CHART

| MARK | LOCATION | REPAIR TYPE | POSTS | TOP RAIL | BOTTOM WIRE | BRACE | FABRIC |
|---|---|---|---|---|---|---|---|
| "CF-1" | WALL "A" | (C) | - | BENT 15' | - | - | - |
| "CF-2" | WALL "A" | (E) | - | - | - | - | DAMAGED 5'x4' |
| "CF-3" | WALL "B" | (E) | - | - | - | - | DAMAGED 25'x4' |
| "CF-4" | WALL "B" | (D) | - | - | DAMAGED 25' | - | - |

### CRACK REPAIR CHART

| MARK | LOCATION | REPAIR TYPE | GENERAL CRACKS (LF) | MAJOR CRACKS WIDTH (IN) | MAJOR CRACKS LENGTH (FT) | MAJOR CRACKS START PNT X | MAJOR CRACKS START PNT Y,Z | MAJOR CRACKS END PNT X | MAJOR CRACKS END PNT Y,Z | RATING |
|---|---|---|---|---|---|---|---|---|---|---|
| "MC-1" | WALL "B" | [1] | - | 0.19 | 5.5 | 10.5 | 2 | 10.5 | 7 | 7 |
| "GC-1" | WALL "A" | [*] | 15 | - | - | - | - | - | - | 8 |
| "GC-2" | FLOOR | [*] | 15 | - | - | - | - | - | - | 8 |
| "GC-3" | WALL "B" | [*] | 15 | - | - | - | - | - | - | 8 |

GRAPHIC SCALES:

0 1' 2' 4' 8' 12' 16'

3/16"=1'-0"

| REVISION NO. | DATE | REVISIONS | BY |
|---|---|---|---|

ATHER R. DAR
LICENSED PROFESSIONAL ENGINEER
No. 7808-S
HAWAII U.S.A.

Exp. Date: 4-30-20

THIS WORK WAS PREPARED BY ME OR UNDER MY SUPERVISION AND CONSTRUCTION OF THIS PROJECT WILL BE UNDER MY OBSERVATION

DEPARTMENT OF HAWAIIAN HOMELAND

# NANAKULI FLOOD CONTROL CHANNEL IMPROVEMENTS NANAKULI VALLEY, OAHU HAWAII

## CHANNEL SEGMENT [129] REPAIR DETAILS

DESIGNED BY: TTP
DRAWN BY: AK, AP, DL
CHECKED BY: AD
SUPV:
DATE: 03/05/2019

HAWAII ENGINEERING GROUP, Inc.
Civil & Structural Engineers
1088 BISHOP STREET #2506
HONOLULU, HI 96813
Tel: 808-533-2092

JOB NO.

SHEET C129
138 OF 225 SHTS

FILE ___ DRAWER ___ ___ FOLDER ___ ___

Plot date: 15-Apr-2020

Full Size Plot

Plot date: 15-Apr-2020
Full Size Plot

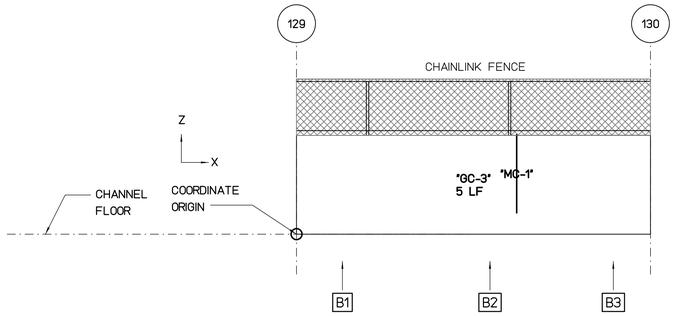


## WALL "B" FLATTEN VIEW

SCALE : 3/16" = 1'-0"

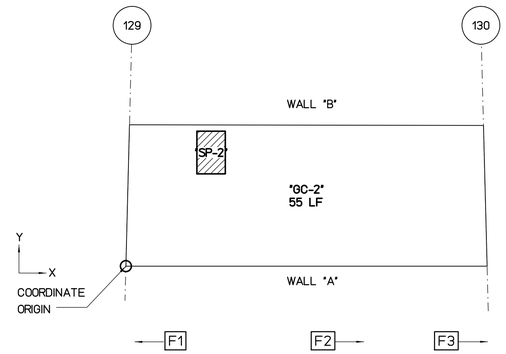


## FLOOR PLAN VIEW

SCALE : 3/16" = 1'-0"

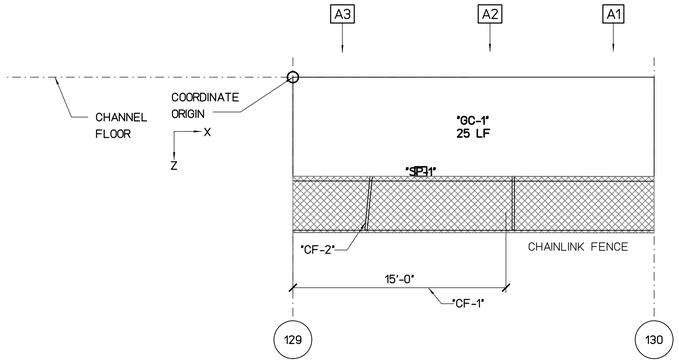


## WALL "A" FLATTEN VIEW

SCALE : 3/16" = 1'-0"

REPAIR LEGEND AND NOTES:

- [2] CRACK AND SPALL REPAIR TYPES, SEE SHEETS SR201 AND SR202 FOR DETAILS. TYPE [*] INDICATES NO-REPAIR
- (A) CHAINLINK FENCE REPAIR TYPES, SEE SHEETS SF201 AND SF202 FOR DETAILS
- 1.0 TOP OF WALL LEANING DISTANCE TOWARD CHANNEL IN INCHES, SEE SHEETS SL101 TO SL207 FOR CONCRETE LINING

PHOTO LEGEND:

- A1 WALL "A" ELEVATION PHOTO IDENTIFICATION SEE FLATTEN VIEW FOR PHOTO LOCATION
- B1 WALL "B" ELEVATION PHOTO IDENTIFICATION SEE FLATTEN VIEW FOR PHOTO LOCATION
- F1 CHANNEL FLOOR PHOTO IDENTIFICATION SEE FLOOR PLAN VIEW FOR PHOTO LOCATION

B1



B2



B3



F1



F2



F3



A1



A2



A3



### SPALL REPAIR CHART

| MARK | LOCATION | REPAIR TYPE | SPALL DIMENSION L | SPALL DIMENSION W | SPALL DIMENSION D | SPALL VOLUME | SPALL CENTER COORDINATE X | SPALL CENTER COORDINATE Y OR Z | RATING |
|---|---|---|---|---|---|---|---|---|---|
| "SP-1" | WALL "A" | 3 | 10 | 8 | 2 | 160 | 9 | 6.6 | 7 |
| "SP-2" | FLOOR | 3 | 24 | 36 | 2 | 1728 | 6 | 8 | 7 |

### CHAINLINK FENCE REPAIR CHART

| MARK | LOCATION | REPAIR TYPE | POSTS | TOP RAIL | BOTTOM WIRE | BRACE | FABRIC |
|---|---|---|---|---|---|---|---|
| "CF-1" | WALL "A" | C | - | BENT 15' | - | - | - |
| "CF-2" | WALL "A" | A | BENT 1 | - | - | - | - |

### CRACK REPAIR CHART

| MARK | LOCATION | REPAIR TYPE | GENERAL CRACKS (LF) | MAJOR CRACKS WIDTH (IN) | MAJOR CRACKS LENGTH (FT) | MAJOR CRACKS START PNT X | MAJOR CRACKS START PNT Y,Z | MAJOR CRACKS END PNT X | MAJOR CRACKS END PNT Y,Z | RATING |
|---|---|---|---|---|---|---|---|---|---|---|
| "MC-1" | WALL "B" | 1 | - | 0.19 | 6 | 15.5 | 1.5 | 15.5 | 7 | 7 |
| "GC-1" | WALL "A" | * | 25 | - | - | - | - | - | - | 8 |
| "GC-2" | FLOOR | * | 55 | - | - | - | - | - | - | 8 |
| "GC-3" | WALL "B" | * | 5 | - | - | - | - | - | - | 9 |

GRAPHIC SCALES:

0 1' 2' 4' 8' 12' 16'

3/16"=1'-0"

| REVISION NO. | DATE | REVISIONS | BY |
|---|---|---|---|

ATHER R. DAR
LICENSED PROFESSIONAL ENGINEER
No. 7808-S
HAWAII U.S.A.
Exp. Date: 4-30-20

THIS WORK WAS PREPARED BY ME OR UNDER MY SUPERVISION AND CONSTRUCTION OF THIS PROJECT WILL BE UNDER MY OBSERVATION

DEPARTMENT OF HAWAIIAN HOMELAND

# NANAKULI FLOOD CONTROL CHANNEL IMPROVEMENTS NANAKULI VALLEY, OAHU HAWAII

CHANNEL SEGMENT 130 REPAIR DETAILS

| | |
|---|---|
| DESIGNED BY: | TTP |
| DRAWN BY: | AK, AP, DL |
| CHECKED BY: | AD |
| SUPV: | |
| DATE: | 03/05/2019 |

HAWAII ENGINEERING GROUP, Inc.
Civil & Structural Engineers
1088 BISHOP STREET #2506
HONOLULU, HI 96813
Tel: 808-533-2092

JOB NO.

SHEET C130
139 OF 225 SHTS

FILE ___ DRAWER ___ ___ FOLDER ___ ___

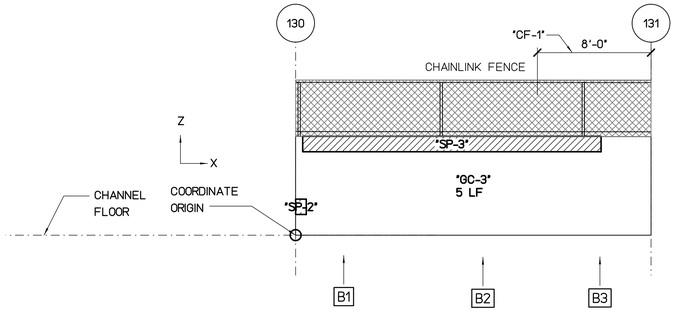


## WALL "B" FLATTEN VIEW

SCALE : 3/16" = 1'-0"

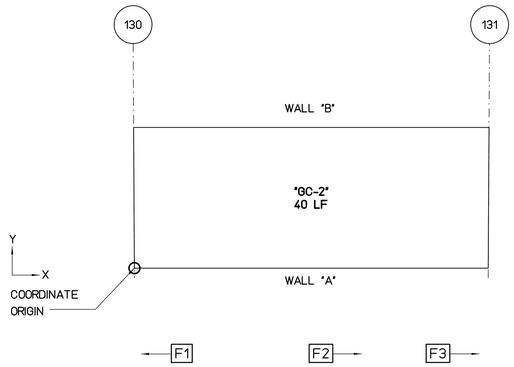


## FLOOR PLAN VIEW

SCALE : 3/16" = 1'-0"

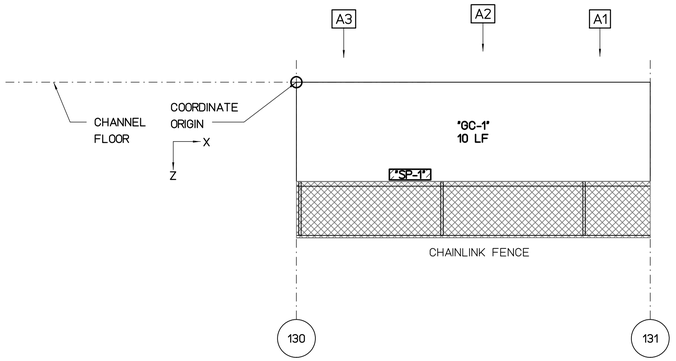


## WALL "A" FLATTEN VIEW

SCALE : 3/16" = 1'-0"

REPAIR LEGEND AND NOTES:

- [2] CRACK AND SPALL REPAIR TYPES, SEE SHEETS SR201 AND SR202 FOR DETAILS. TYPE [*] INDICATES NO-REPAIR
- (A) CHAINLINK FENCE REPAIR TYPES, SEE SHEETS SF201 AND SF202 FOR DETAILS
- 1.0 TOP OF WALL LEANING DISTANCE TOWARD CHANNEL IN INCHES, SEE SHEETS SL101 TO SL207 FOR CONCRETE LINING

PHOTO LEGEND:

- [A1] WALL "A" ELEVATION PHOTO IDENTIFICATION SEE FLATTEN VIEW FOR PHOTO LOCATION
- [B1] WALL "B" ELEVATION PHOTO IDENTIFICATION SEE FLATTEN VIEW FOR PHOTO LOCATION
- [F1] CHANNEL FLOOR PHOTO IDENTIFICATION SEE FLOOR PLAN VIEW FOR PHOTO LOCATION

B1



B2



B3



F1



F2



F3

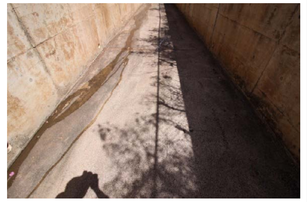

A1



A2



A3



### SPALL REPAIR CHART

| MARK | LOCATION | REPAIR TYPE | SPALL DIMENSION L | SPALL DIMENSION W | SPALL DIMENSION D | SPALL VOLUME | SPALL CENTER COORDINATE X | SPALL CENTER COORDINATE Y OR Z | RATING |
|---|---|---|---|---|---|---|---|---|---|
| "SP-1" | WALL "A" | [3] | 35 | 9 | 2 | 630 | 8 | 6.5 | 7 |
| "SP-2" | WALL "B" | [3] | 9 | 13 | 2 | 234 | 0.4 | 2 | 7 |
| "SP-3" | WALL "B" | [3] | 252 | 13 | 2 | 6552 | 11 | 6.5 | 7 |

### CHAINLINK FENCE REPAIR CHART

| MARK | LOCATION | REPAIR TYPE | POSTS | TOP RAIL | BOTTOM WIRE | BRACE | FABRIC |
|---|---|---|---|---|---|---|---|
| "CF-1" | WALL "B" | (E) | - | - | - | - | DAMAGED 8'x4' |

### CRACK REPAIR CHART

| MARK | LOCATION | REPAIR TYPE | GENERAL CRACKS (LF) | MAJOR CRACKS WIDTH (IN) | MAJOR CRACKS LENGTH (FT) | MAJOR CRACKS START PNT X | MAJOR CRACKS START PNT Y,Z | MAJOR CRACKS END PNT X | MAJOR CRACKS END PNT Y,Z | RATING |
|---|---|---|---|---|---|---|---|---|---|---|
| "GC-1" | WALL "A" | [*] | 10 | - | - | - | - | - | - | 8 |
| "GC-2" | FLOOR | [*] | 40 | - | - | - | - | - | - | 8 |
| "GC-3" | WALL "B" | [*] | 5 | - | - | - | - | - | - | 9 |

GRAPHIC SCALES:

0 1' 2' 4' 8' 12' 16'

3/16"=1'-0"

| REVISION NO. | DATE | REVISIONS | BY |
|---|---|---|---|

ATHER R. DAR
LICENSED PROFESSIONAL ENGINEER
No. 7808-S
HAWAII U.S.A.
Exp. Date: 4-30-20

THIS WORK WAS PREPARED BY ME OR UNDER MY SUPERVISION AND CONSTRUCTION OF THIS PROJECT WILL BE UNDER MY OBSERVATION

DEPARTMENT OF HAWAIIAN HOMELAND

NANAKULI FLOOD CONTROL
CHANNEL IMPROVEMENTS
NANAKULI VALLEY, OAHU HAWAII

CHANNEL SEGMENT [131] REPAIR DETAILS

| | |
|---|---|
| DESIGNED BY: | TTP |
| DRAWN BY: | AK, AP, DL |
| CHECKED BY: | AD |
| SUPV: | |
| DATE: | 03/05/2019 |

HAWAII ENGINEERING GROUP, Inc.
Civil & Structural Engineers
1088 BISHOP STREET #2506
HONOLULU, HI 96813
Tel: 808-533-2092

JOB NO.

SHEET C131

140 OF 225 SHTS

FILE ___ DRAWER ___ ___ FOLDER ___ ___

Plot date: 15-Apr-2020

Full Size Plot

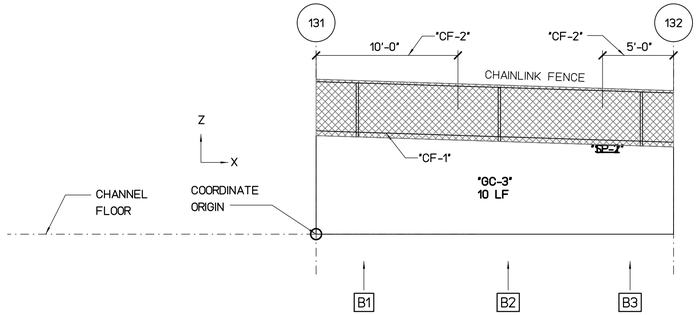


## WALL "B" FLATTEN VIEW

SCALE : 3/16" = 1'-0"

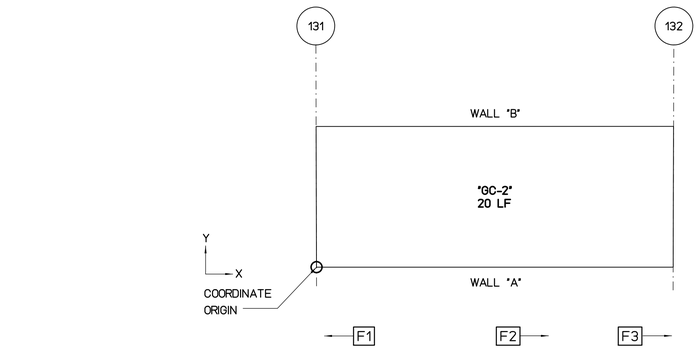


## FLOOR PLAN VIEW

SCALE : 3/16" = 1'-0"

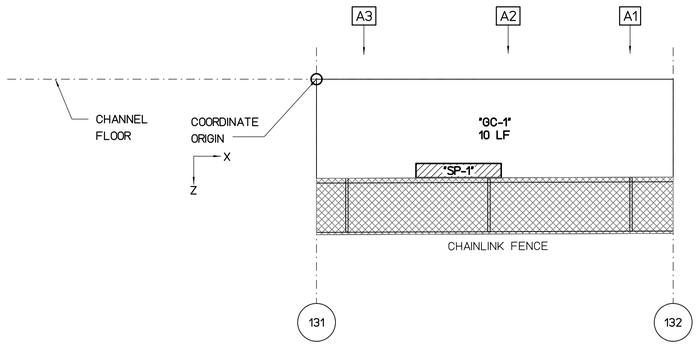


## WALL "A" FLATTEN VIEW

SCALE : 3/16" = 1'-0"

REPAIR LEGEND AND NOTES:

- 2 — CRACK AND SPALL REPAIR TYPES, SEE SHEETS SR201 AND SR202 FOR DETAILS. TYPE ⊠ INDICATES NO-REPAIR
- Ⓐ — CHAINLINK FENCE REPAIR TYPES, SEE SHEETS SF201 AND SF202 FOR DETAILS
- 1.0 — TOP OF WALL LEANING DISTANCE TOWARD CHANNEL IN INCHES, SEE SHEETS SL101 TO SL207 FOR CONCRETE LINING

PHOTO LEGEND:

- A1 — WALL "A" ELEVATION PHOTO IDENTIFICATION SEE FLATTEN VIEW FOR PHOTO LOCATION
- B1 — WALL "B" ELEVATION PHOTO IDENTIFICATION SEE FLATTEN VIEW FOR PHOTO LOCATION
- F1 — CHANNEL FLOOR PHOTO IDENTIFICATION SEE FLOOR PLAN VIEW FOR PHOTO LOCATION

B1



B2



B3



F1



F2



F3



A1



A2



A3



### SPALL REPAIR CHART

| MARK | LOCATION | REPAIR TYPE | SPALL DIMENSION L | SPALL DIMENSION W | SPALL DIMENSION D | SPALL VOLUME | SPALL CENTER COORDINATE X | SPALL CENTER COORDINATE Y OR Z | RATING |
|---|---|---|---|---|---|---|---|---|---|
| "SP-1" | WALL "A" | 3 | 72 | 12 | 2 | 1728 | 10 | 6.5 | 7 |
| "SP-2" | WALL "B" | 3 | 17 | 6 | 2 | 204 | 20.5 | 6 | 7 |

### CHAINLINK FENCE REPAIR CHART

| MARK | LOCATION | REPAIR TYPE | POSTS | TOP RAIL | BOTTOM WIRE | BRACE | FABRIC |
|---|---|---|---|---|---|---|---|
| "CF-1" | WALL "B" | Ⓓ | - | - | DAMAGED 25' | - | - |
| "CF-2" | WALL "B" | Ⓔ | - | - | - | - | DAMAGED 15'x4' |

### CRACK REPAIR CHART

| MARK | LOCATION | REPAIR TYPE | GENERAL CRACKS (LF) | MAJOR CRACKS WIDTH (IN) | MAJOR CRACKS LENGTH (FT) | MAJOR CRACKS START PNT X | MAJOR CRACKS START PNT Y,Z | MAJOR CRACKS END PNT X | MAJOR CRACKS END PNT Y,Z | RATING |
|---|---|---|---|---|---|---|---|---|---|---|
| "GC-1" | WALL "A" | ⊠ | 10 | - | - | - | - | - | - | 8 |
| "GC-2" | FLOOR | ⊠ | 20 | - | - | - | - | - | - | 8 |
| "GC-3" | WALL "B" | ⊠ | 10 | - | - | - | - | - | - | 8 |

GRAPHIC SCALES:

0 1' 2' 4' 8' 12' 16'

3/16"=1'-0"

| REVISION NO. | DATE | REVISIONS | BY |
|---|---|---|---|

ATHER R. DAR
LICENSED PROFESSIONAL ENGINEER
No. 7808-S
HAWAII U.S.A.

Exp. Date: 4-30-20

THIS WORK WAS PREPARED BY ME OR UNDER MY SUPERVISION AND CONSTRUCTION OF THIS PROJECT WILL BE UNDER MY OBSERVATION

DEPARTMENT OF HAWAIIAN HOMELAND

# NANAKULI FLOOD CONTROL CHANNEL IMPROVEMENTS NANAKULI VALLEY, OAHU HAWAII

## CHANNEL SEGMENT 132 REPAIR DETAILS

| | |
|---|---|
| DESIGNED BY: | TTP |
| DRAWN BY: | AK, AP, DL |
| CHECKED BY: | AD |
| SUPV: | |
| DATE: | 03/05/2019 |


HAWAII ENGINEERING GROUP, Inc.
Civil & Structural Engineers
1088 BISHOP STREET #2506
HONOLULU, HI 96813
Tel: 808-533-2092


JOB NO.

SHEET C132

141 OF 225 SHTS

FILE ___ DRAWER ___ ___ FOLDER ___ ___

Plot date: 15-Apr-2020

Full Size Plot

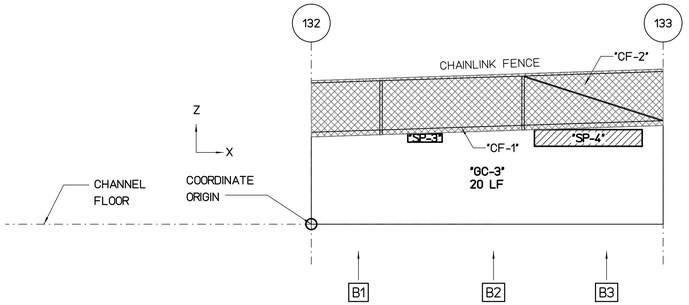


## WALL "B" FLATTEN VIEW

SCALE : 3/16" = 1'-0"

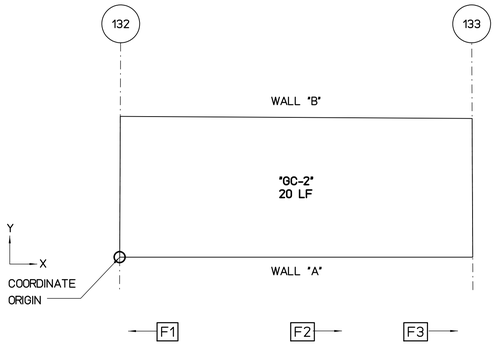


## FLOOR PLAN VIEW

SCALE : 3/16" = 1'-0"

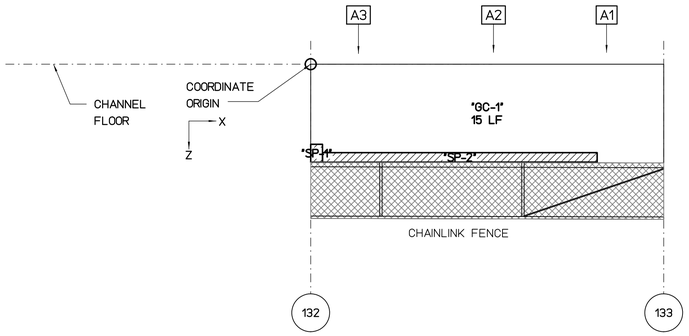


## WALL "A" FLATTEN VIEW

SCALE : 3/16" = 1'-0"

REPAIR LEGEND AND NOTES:

- 2 — CRACK AND SPALL REPAIR TYPES, SEE SHEETS SR201 AND SR202 FOR DETAILS. TYPE [*] INDICATES NO-REPAIR
- (A) — CHAINLINK FENCE REPAIR TYPES, SEE SHEETS SF201 AND SF202 FOR DETAILS
- 1.0 — TOP OF WALL LEANING DISTANCE TOWARD CHANNEL IN INCHES, SEE SHEETS SL101 TO SL207 FOR CONCRETE LINING

PHOTO LEGEND:

- A1 — WALL "A" ELEVATION PHOTO IDENTIFICATION SEE FLATTEN VIEW FOR PHOTO LOCATION
- B1 — WALL "B" ELEVATION PHOTO IDENTIFICATION SEE FLATTEN VIEW FOR PHOTO LOCATION
- F1 — CHANNEL FLOOR PHOTO IDENTIFICATION SEE FLOOR PLAN VIEW FOR PHOTO LOCATION

B1



B2



B3



F1



F2



F3



A1



A2



A3



### SPALL REPAIR CHART

| MARK | LOCATION | REPAIR TYPE | SPALL DIMENSION L | SPALL DIMENSION W | SPALL DIMENSION D | SPALL VOLUME | SPALL CENTER COORDINATE X | SPALL CENTER COORDINATE Y OR Z | RATING |
|---|---|---|---|---|---|---|---|---|---|
| "SP-1" | WALL "A" | 3 | 10 | 15 | 2 | 300 | 0.4 | 6.3 | 7 |
| "SP-2" | WALL "A" | 3 | 232 | 8 | 2 | 3712 | 10.5 | 6.6 | 7 |
| "SP-3" | WALL "B" | 3 | 29 | 7 | 2 | 406 | 8 | 6.1 | 7 |
| "SP-4" | WALL "B" | 3 | 91 | 14 | 2 | 2548 | 19.5 | 6.1 | 7 |

### CHAINLINK FENCE REPAIR CHART

| MARK | LOCATION | REPAIR TYPE | POSTS | TOP RAIL | BOTTOM WIRE | BRACE | FABRIC |
|---|---|---|---|---|---|---|---|
| "CF-1" | WALL "B" | (D) | - | - | DAMAGED 25' | - | - |
| "CF-2" | WALL "B" | (E) | - | - | - | - | DAMAGED 25'x4' |

### CRACK REPAIR CHART

| MARK | LOCATION | REPAIR TYPE | GENERAL CRACKS (LF) | MAJOR CRACKS WIDTH (IN) | MAJOR CRACKS LENGTH (FT) | MAJOR CRACKS START PNT X | MAJOR CRACKS START PNT Y,Z | MAJOR CRACKS END PNT X | MAJOR CRACKS END PNT Y,Z | RATING |
|---|---|---|---|---|---|---|---|---|---|---|
| "GC-1" | WALL "A" | * | 15 | - | - | - | - | - | - | 8 |
| "GC-2" | FLOOR | * | 20 | - | - | - | - | - | - | 8 |
| "GC-3" | WALL "B" | * | 20 | - | - | - | - | - | - | 8 |

GRAPHIC SCALES:

0 1' 2' 4' 8' 12' 16'

3/16"=1'-0"

| REVISION NO. | DATE | REVISIONS | BY |
|---|---|---|---|
| | | | |

ATHER R. DAR
LICENSED PROFESSIONAL ENGINEER
No. 7808-S
HAWAII U.S.A.

Exp. Date: 4-30-20

THIS WORK WAS PREPARED BY ME OR UNDER MY SUPERVISION AND CONSTRUCTION OF THIS PROJECT WILL BE UNDER MY OBSERVATION

DEPARTMENT OF HAWAIIAN HOMELAND

# NANAKULI FLOOD CONTROL CHANNEL IMPROVEMENTS NANAKULI VALLEY, OAHU HAWAII

## CHANNEL SEGMENT 133 REPAIR DETAILS

| | |
|---|---|
| DESIGNED BY: | TTP |
| DRAWN BY: | AK, AP, DL |
| CHECKED BY: | AD |
| SUPV: | |
| DATE: | 03/05/2019 |

HAWAII ENGINEERING GROUP, Inc.
Civil & Structural Engineers
1088 BISHOP STREET #2506
HONOLULU, HI 96813
Tel: 808-533-2092

JOB NO.

SHEET C133

142 OF 225 SHTS

FILE ___ DRAWER ___ ___ FOLDER ___ ___

Plot date: 15-Apr-2020

Full Size Plot

Plot date: 15-Apr-2020
Full Size Plot

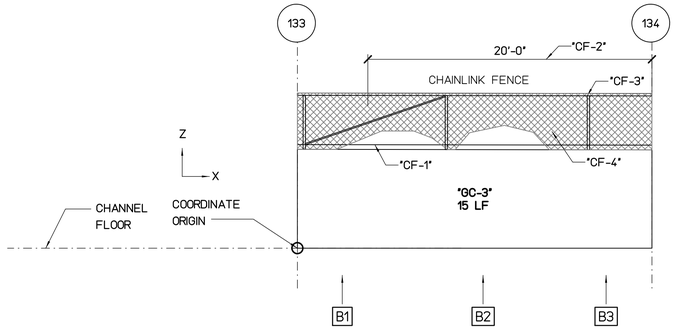


## WALL "B" FLATTEN VIEW

SCALE : 3/16" = 1'-0"

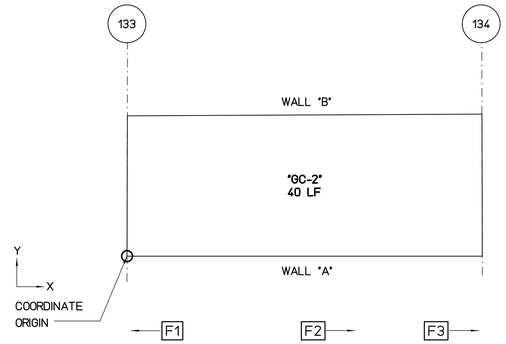


## FLOOR PLAN VIEW

SCALE : 3/16" = 1'-0"

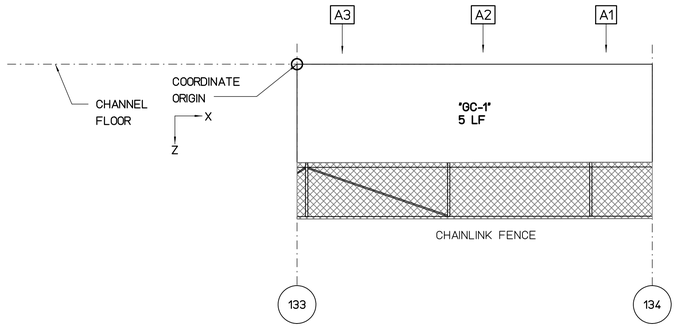


## WALL "A" FLATTEN VIEW

SCALE : 3/16" = 1'-0"

REPAIR LEGEND AND NOTES:

- 2 — CRACK AND SPALL REPAIR TYPES, SEE SHEETS SR201 AND SR202 FOR DETAILS. TYPE [*] INDICATES NO-REPAIR
- (A) — CHAINLINK FENCE REPAIR TYPES, SEE SHEETS SF201 AND SF202 FOR DETAILS
- 1.0 — TOP OF WALL LEANING DISTANCE TOWARD CHANNEL IN INCHES, SEE SHEETS SL101 TO SL207 FOR CONCRETE LINING

PHOTO LEGEND:

- A1 — WALL "A" ELEVATION PHOTO IDENTIFICATION SEE FLATTEN VIEW FOR PHOTO LOCATION
- B1 — WALL "B" ELEVATION PHOTO IDENTIFICATION SEE FLATTEN VIEW FOR PHOTO LOCATION
- F1 — CHANNEL FLOOR PHOTO IDENTIFICATION SEE FLOOR PLAN VIEW FOR PHOTO LOCATION

B1



B2



B3



F1



F2



F3

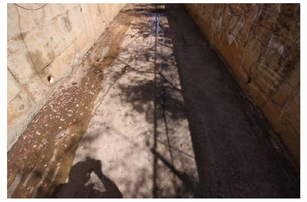

A1



A2



A3



### SPALL REPAIR CHART

| MARK | LOCATION | REPAIR TYPE | SPALL DIMENSION | | | SPALL VOLUME | SPALL CENTER COORDINATE | | RATING |
|---|---|---|---|---|---|---|---|---|---|
| | | | L | W | D | | X | Y OR Z | |
| | | | | | | | | | |
| | | | | | | | | | |
| | | | | | | | | | |
| | | | | | | | | | |
| | | | | | | | | | |
| | | | | | | | | | |
| | | | | | | | | | |
| | | | | | | | | | |

### CHAINLINK FENCE REPAIR CHART

| MARK | LOCATION | REPAIR TYPE | POSTS | TOP RAIL | BOTTOM WIRE | BRACE | FABRIC |
|---|---|---|---|---|---|---|---|
| "CF-1" | WALL "B" | (D) | - | - | DAMAGED 25' | - | - |
| "CF-2" | WALL "B" | (C) | - | BENT 20' | - | - | - |
| "CF-3" | WALL "B" | (A) | DAMAGED 1 | - | - | - | - |
| "CF-4" | WALL "B" | (E) | - | - | - | - | DAMAGED 25'x4' |
| | | | | | | | |
| | | | | | | | |
| | | | | | | | |
| | | | | | | | |
| | | | | | | | |
| | | | | | | | |

### CRACK REPAIR CHART

| MARK | LOCATION | REPAIR TYPE | GENERAL CRACKS (LF) | MAJOR CRACKS | | | | | | RATING |
|---|---|---|---|---|---|---|---|---|---|---|
| | | | | WIDTH (IN) | LENGTH (FT) | START PNT X | START PNT Y,Z | END PNT X | END PNT Y,Z | |
| "GC-1" | WALL "A" | [*] | 5 | - | - | - | - | - | - | 9 |
| "GC-2" | FLOOR | [*] | 40 | - | - | - | - | - | - | 8 |
| "GC-3" | WALL "B" | [*] | 15 | - | - | - | - | - | - | 8 |
| | | | | | | | | | | |
| | | | | | | | | | | |
| | | | | | | | | | | |
| | | | | | | | | | | |

GRAPHIC SCALES:

0 1' 2' 4' 8' 12' 16'

3/16"=1'-0"

| REVISION NO. | DATE | REVISIONS | BY |
|---|---|---|---|
| | | | |

ATHER R. DAR
LICENSED PROFESSIONAL ENGINEER
No. 7808-S
HAWAII U.S.A.
Exp. Date: 4-30-20

THIS WORK WAS PREPARED BY ME OR UNDER MY SUPERVISION AND CONSTRUCTION OF THIS PROJECT WILL BE UNDER MY OBSERVATION

DEPARTMENT OF HAWAIIAN HOMELAND

# NANAKULI FLOOD CONTROL CHANNEL IMPROVEMENTS NANAKULI VALLEY, OAHU HAWAII

## CHANNEL SEGMENT 134 REPAIR DETAILS

| | |
|---|---|
| DESIGNED BY: | TTP |
| DRAWN BY: | AK, AP, DL |
| CHECKED BY: | AD |
| SUPV: | |
| DATE: | 03/05/2019 |

HAWAII ENGINEERING GROUP, Inc.
Civil & Structural Engineers
1088 BISHOP STREET #2506
HONOLULU, HI 96813
Tel: 808-533-2092

JOB NO.

SHEET C134

143 OF 225 SHTS

FILE ___ DRAWER ___ ___ FOLDER ___ ___

Plot date: 15-Apr-2020
Full Size Plot

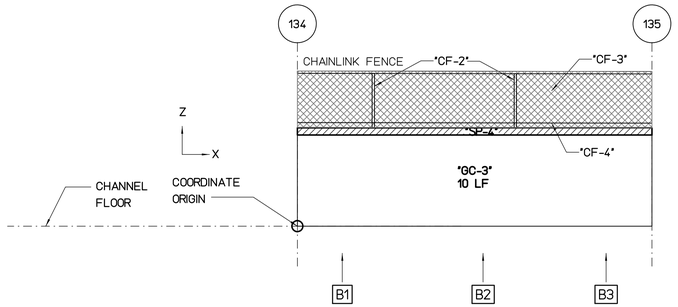


## WALL "B" FLATTEN VIEW

SCALE : 3/16" = 1'-0"

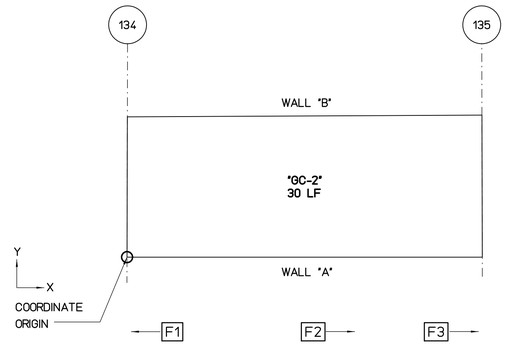


## FLOOR PLAN VIEW

SCALE : 3/16" = 1'-0"

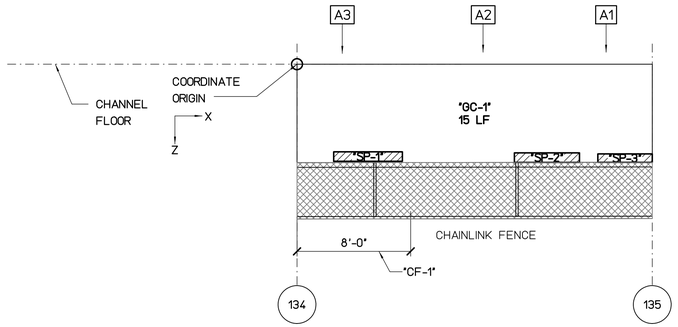


## WALL "A" FLATTEN VIEW

SCALE : 3/16" = 1'-0"

REPAIR LEGEND AND NOTES:

- 2 — CRACK AND SPALL REPAIR TYPES, SEE SHEETS SR201 AND SR202 FOR DETAILS. TYPE ⊠ INDICATES NO-REPAIR
- Ⓐ — CHAINLINK FENCE REPAIR TYPES, SEE SHEETS SF201 AND SF202 FOR DETAILS
- 1.0 — TOP OF WALL LEANING DISTANCE TOWARD CHANNEL IN INCHES, SEE SHEETS SL101 TO SL207 FOR CONCRETE LINING

PHOTO LEGEND:

- A1 — WALL "A" ELEVATION PHOTO IDENTIFICATION SEE FLATTEN VIEW FOR PHOTO LOCATION
- B1 — WALL "B" ELEVATION PHOTO IDENTIFICATION SEE FLATTEN VIEW FOR PHOTO LOCATION
- F1 — CHANNEL FLOOR PHOTO IDENTIFICATION SEE FLOOR PLAN VIEW FOR PHOTO LOCATION

B1



B2



B3



F1



F2



F3

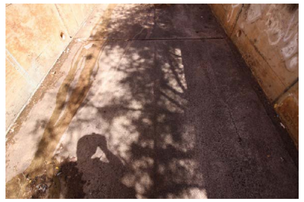

A1



A2



A3



### SPALL REPAIR CHART

| MARK | LOCATION | REPAIR TYPE | SPALL DIMENSION L | SPALL DIMENSION W | SPALL DIMENSION D | SPALL VOLUME | SPALL CENTER COORDINATE X | SPALL CENTER COORDINATE Y OR Z | RATING |
|---|---|---|---|---|---|---|---|---|---|
| "SP-1" | WALL "A" | 3 | 58 | 8 | 2 | 928 | 5 | 6.5 | 7 |
| "SP-2" | WALL "A" | 3 | 55 | 8 | 2 | 880 | 17.6 | 6.6 | 7 |
| "SP-3" | WALL "A" | 3 | 46 | 7 | 2 | 644 | 23.1 | 6.6 | 7 |
| "SP-4" | WALL "B" | 3 | 300 | 6 | 2 | 3600 | 13 | 6.7 | 7 |

### CHAINLINK FENCE REPAIR CHART

| MARK | LOCATION | REPAIR TYPE | POSTS | TOP RAIL | BOTTOM WIRE | BRACE | FABRIC |
|---|---|---|---|---|---|---|---|
| "CF-1" | WALL "A" | Ⓒ | - | BENT 8' | - | - | - |
| "CF-2" | WALL "B" | Ⓐ | BENT 2 | - | - | - | - |
| "CF-3" | WALL "B" | Ⓔ | - | - | - | - | DAMAGED 25'x4' |
| "CF-4" | WALL "B" | Ⓓ | - | - | DAMAGED 25' | - | - |

### CRACK REPAIR CHART

| MARK | LOCATION | REPAIR TYPE | GENERAL CRACKS (LF) | MAJOR CRACKS WIDTH (IN) | MAJOR CRACKS LENGTH (FT) | MAJOR CRACKS START PNT X | MAJOR CRACKS START PNT Y,Z | MAJOR CRACKS END PNT X | MAJOR CRACKS END PNT Y,Z | RATING |
|---|---|---|---|---|---|---|---|---|---|---|
| "GC-1" | WALL "A" | ⊠ | 15 | - | - | - | - | - | - | 8 |
| "GC-2" | FLOOR | ⊠ | 30 | - | - | - | - | - | - | 8 |
| "GC-3" | WALL "B" | ⊠ | 10 | - | - | - | - | - | - | 8 |

GRAPHIC SCALES:

0 1' 2' 4' 8' 12' 16'

3/16"=1'-0"

| REVISION NO. | DATE | REVISIONS | BY |
|---|---|---|---|

ARTHER R. DAR
LICENSED PROFESSIONAL ENGINEER
No. 7808-S
HAWAII U.S.A.
Exp. Date: 4-30-20

THIS WORK WAS PREPARED BY ME OR UNDER MY SUPERVISION AND CONSTRUCTION OF THIS PROJECT WILL BE UNDER MY OBSERVATION

DEPARTMENT OF HAWAIIAN HOMELAND

NANAKULI FLOOD CONTROL
CHANNEL IMPROVEMENTS
NANAKULI VALLEY, OAHU HAWAII

CHANNEL SEGMENT 135 REPAIR DETAILS

| | |
|---|---|
| DESIGNED BY: | TTP |
| DRAWN BY: | AK, AP, DL |
| CHECKED BY: | AD |
| SUPV: | |
| DATE: | 03/05/2019 |

HAWAII ENGINEERING GROUP, Inc.
Civil & Structural Engineers
1088 BISHOP STREET #2506
HONOLULU, HI 96813
Tel: 808-533-2092

JOB NO.

SHEET C135
144 OF 225 SHTS

FILE ___ DRAWER ___ ___ FOLDER ___ ___

Plot date: 15-Apr-2020
Full Size Plot

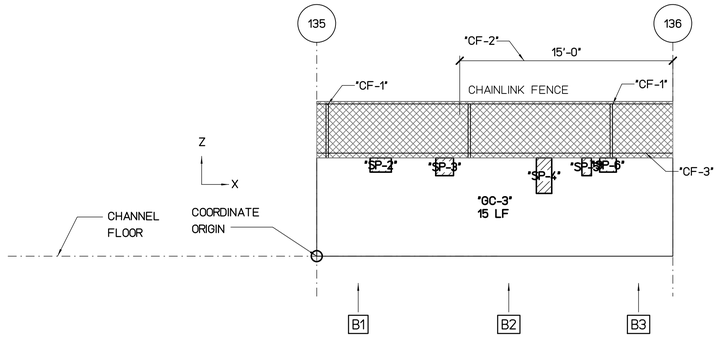


## WALL "B" FLATTEN VIEW

SCALE : 3/16" = 1'-0"

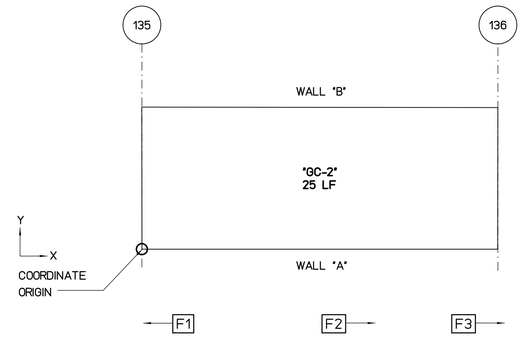


## FLOOR PLAN VIEW

SCALE : 3/16" = 1'-0"

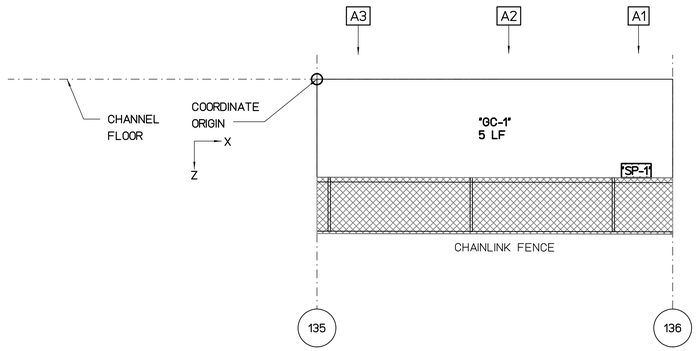


## WALL "A" FLATTEN VIEW

SCALE : 3/16" = 1'-0"

REPAIR LEGEND AND NOTES:

- 2 — CRACK AND SPALL REPAIR TYPES, SEE SHEETS SR201 AND SR202 FOR DETAILS. TYPE [*] INDICATES NO-REPAIR
- (A) — CHAINLINK FENCE REPAIR TYPES, SEE SHEETS SF201 AND SF202 FOR DETAILS
- 1.0 — TOP OF WALL LEANING DISTANCE TOWARD CHANNEL IN INCHES, SEE SHEETS SL101 TO SL207 FOR CONCRETE LINING

PHOTO LEGEND:

- A1 — WALL "A" ELEVATION PHOTO IDENTIFICATION SEE FLATTEN VIEW FOR PHOTO LOCATION
- B1 — WALL "B" ELEVATION PHOTO IDENTIFICATION SEE FLATTEN VIEW FOR PHOTO LOCATION
- F1 — CHANNEL FLOOR PHOTO IDENTIFICATION SEE FLOOR PLAN VIEW FOR PHOTO LOCATION

B1



B2



B3



F1



F2



F3



A1



A2



A3



### SPALL REPAIR CHART

| MARK | LOCATION | REPAIR TYPE | SPALL DIMENSION L | SPALL DIMENSION W | SPALL DIMENSION D | SPALL VOLUME | SPALL CENTER COORDINATE X | SPALL CENTER COORDINATE Y OR Z | RATING |
|---|---|---|---|---|---|---|---|---|---|
| "SP-1" | WALL "A" | 3 | 25 | 12 | 2 | 600 | 22.5 | 6.4 | 7 |
| "SP-2" | WALL "B" | 3 | 18 | 12 | 2 | 432 | 4.5 | 6.4 | 7 |
| "SP-3" | WALL "B" | 3 | 15 | 15 | 2 | 450 | 9 | 6.3 | 7 |
| "SP-4" | WALL "B" | 3 | 13 | 30 | 2 | 780 | 16 | 5.7 | 7 |
| "SP-5" | WALL "B" | 3 | 8 | 15 | 2 | 240 | 19 | 6.3 | 7 |
| "SP-6" | WALL "B" | 3 | 14 | 12 | 2 | 336 | 20.5 | 6.4 | 7 |

### CHAINLINK FENCE REPAIR CHART

| MARK | LOCATION | REPAIR TYPE | POSTS | TOP RAIL | BOTTOM WIRE | BRACE | FABRIC |
|---|---|---|---|---|---|---|---|
| "CF-1" | WALL "B" | (A) | BENT 2 | - | - | - | - |
| "CF-2" | WALL "B" | (C) | - | BENT 15' | - | - | - |
| "CF-3" | WALL "B" | (D) | - | - | DAMAGED 25' | - | - |

### CRACK REPAIR CHART

| MARK | LOCATION | REPAIR TYPE | GENERAL CRACKS (LF) | MAJOR CRACKS WIDTH (IN) | MAJOR CRACKS LENGTH (FT) | MAJOR CRACKS START PNT X | MAJOR CRACKS START PNT Y,Z | MAJOR CRACKS END PNT X | MAJOR CRACKS END PNT Y,Z | RATING |
|---|---|---|---|---|---|---|---|---|---|---|
| "GC-1" | WALL "A" | * | 5 | - | - | - | - | - | - | 9 |
| "GC-2" | FLOOR | * | 25 | - | - | - | - | - | - | 8 |
| "GC-3" | WALL "B" | * | 15 | - | - | - | - | - | - | 8 |

GRAPHIC SCALES:

0 1' 2' 4' 8' 12' 16'

3/16"=1'-0"

| REVISION NO. | DATE | REVISIONS | BY |
|---|---|---|---|

ATHER R. DAR
LICENSED PROFESSIONAL ENGINEER
No. 7808-S
HAWAII U.S.A.
Exp. Date: 4-30-20

THIS WORK WAS PREPARED BY ME OR UNDER MY SUPERVISION AND CONSTRUCTION OF THIS PROJECT WILL BE UNDER MY OBSERVATION

DEPARTMENT OF HAWAIIAN HOMELAND

# NANAKULI FLOOD CONTROL CHANNEL IMPROVEMENTS NANAKULI VALLEY, OAHU HAWAII

## CHANNEL SEGMENT 136 REPAIR DETAILS

| | |
|---|---|
| DESIGNED BY: | TTP |
| DRAWN BY: | AK, AP, DL |
| CHECKED BY: | AD |
| SUPV: | |
| DATE: | 03/05/2019 |

HAWAII ENGINEERING GROUP, Inc.
Civil & Structural Engineers
1088 BISHOP STREET #2506
HONOLULU, HI 96813
Tel: 808-533-2092

JOB NO.

SHEET C136

145 OF 225 SHTS

FILE ___ DRAWER ___ ___ FOLDER ___ ___

Plot date: 15-Apr-2020
Full Size Plot

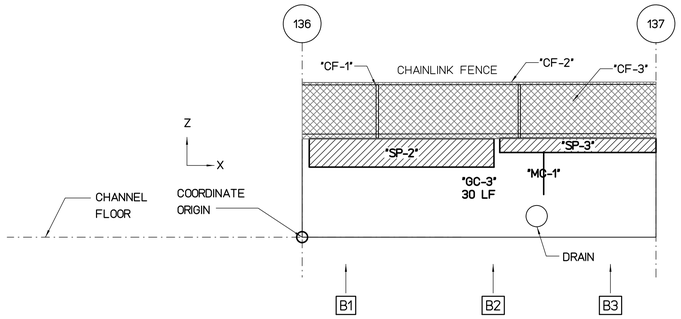


## WALL "B" FLATTEN VIEW

SCALE : 3/16" = 1'-0"

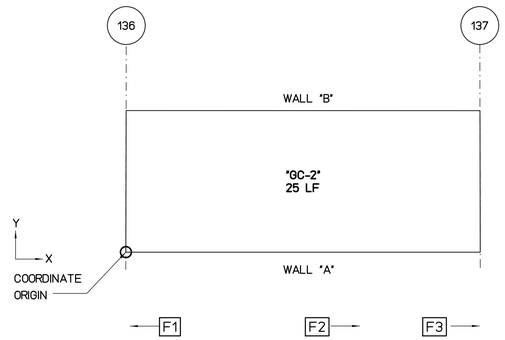


## FLOOR PLAN VIEW

SCALE : 3/16" = 1'-0"

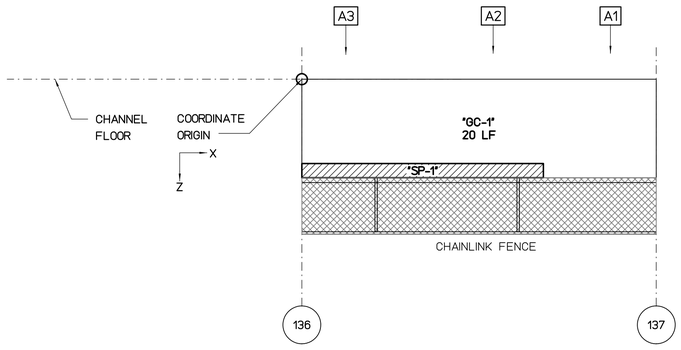


## WALL "A" FLATTEN VIEW

SCALE : 3/16" = 1'-0"

REPAIR LEGEND AND NOTES:

- [2] CRACK AND SPALL REPAIR TYPES, SEE SHEETS SR201 AND SR202 FOR DETAILS. TYPE [*] INDICATES NO-REPAIR
- (A) CHAINLINK FENCE REPAIR TYPES, SEE SHEETS SF201 AND SF202 FOR DETAILS
- 1.0> TOP OF WALL LEANING DISTANCE TOWARD CHANNEL IN INCHES, SEE SHEETS SL101 TO SL207 FOR CONCRETE LINING

PHOTO LEGEND:

- [A1] WALL "A" ELEVATION PHOTO IDENTIFICATION SEE FLATTEN VIEW FOR PHOTO LOCATION
- [B1] WALL "B" ELEVATION PHOTO IDENTIFICATION SEE FLATTEN VIEW FOR PHOTO LOCATION
- [F1] CHANNEL FLOOR PHOTO IDENTIFICATION SEE FLOOR PLAN VIEW FOR PHOTO LOCATION

B1



B2



B3



F1



F2



F3



A1



A2



A3



### SPALL REPAIR CHART

| MARK | LOCATION | REPAIR TYPE | SPALL DIMENSION L | SPALL DIMENSION W | SPALL DIMENSION D | SPALL VOLUME | SPALL CENTER COORDINATE X | SPALL CENTER COORDINATE Y OR Z | RATING |
|---|---|---|---|---|---|---|---|---|---|
| "SP-1" | WALL "A" | 3 | 204 | 12 | 2 | 4896 | 8.5 | 6.4 | 7 |
| "SP-2" | WALL "B" | 3 | 156 | 24 | 3 | 11232 | 7 | 5.9 | 6 |
| "SP-3" | WALL "B" | 3 | 132 | 12 | 3 | 4752 | 19.4 | 6.5 | 6 |

### CHAINLINK FENCE REPAIR CHART

| MARK | LOCATION | REPAIR TYPE | POSTS | TOP RAIL | BOTTOM WIRE | BRACE | FABRIC |
|---|---|---|---|---|---|---|---|
| "CF-1" | WALL "B" | (A) | DAMAGED 1 | - | - | - | - |
| "CF-2" | WALL "B" | (C) | - | DAMAGED 25' | - | - | - |
| "CF-3" | WALL "B" | (E) | - | - | - | - | DAMAGED 25'x4' |

### CRACK REPAIR CHART

| MARK | LOCATION | REPAIR TYPE | GENERAL CRACKS (LF) | MAJOR CRACKS WIDTH (IN) | MAJOR CRACKS LENGTH (FT) | MAJOR CRACKS START PNT X | MAJOR CRACKS START PNT Y,Z | MAJOR CRACKS END PNT X | MAJOR CRACKS END PNT Y,Z | RATING |
|---|---|---|---|---|---|---|---|---|---|---|
| "MC-1" | WALL "B" | 1 | - | 0.19 | 4 | 17 | 3 | 17 | 6 | 7 |
| "GC-1" | WALL "A" | * | 20 | - | - | - | - | - | - | 8 |
| "GC-2" | FLOOR | * | 25 | - | - | - | - | - | - | 8 |
| "GC-3" | WALL "B" | * | 30 | - | - | - | - | - | - | 8 |

GRAPHIC SCALES:

0 1' 2' 4' 8' 12' 16'

3/16"=1'-0"

| REVISION NO. | DATE | REVISIONS | BY |
|---|---|---|---|

ATHER R. DAR
LICENSED PROFESSIONAL ENGINEER
No. 7808-S
HAWAII U.S.A.
Exp. Date: 4-30-20

THIS WORK WAS PREPARED BY ME OR UNDER MY SUPERVISION AND CONSTRUCTION OF THIS PROJECT WILL BE UNDER MY OBSERVATION

DEPARTMENT OF HAWAIIAN HOMELAND

# NANAKULI FLOOD CONTROL CHANNEL IMPROVEMENTS NANAKULI VALLEY, OAHU HAWAII

CHANNEL SEGMENT [137] REPAIR DETAILS

| | |
|---|---|
| DESIGNED BY: | TTP |
| DRAWN BY: | AK, AP, DL |
| CHECKED BY: | AD |
| SUPV: | |
| DATE: | 03/05/2019 |

HAWAII ENGINEERING GROUP, Inc.
Civil & Structural Engineers
1088 BISHOP STREET #2506
HONOLULU, HI 96813
Tel: 808-533-2092

JOB NO.

SHEET C137

146 OF 225 SHTS

FILE ___ DRAWER ___ ___ FOLDER ___ ___

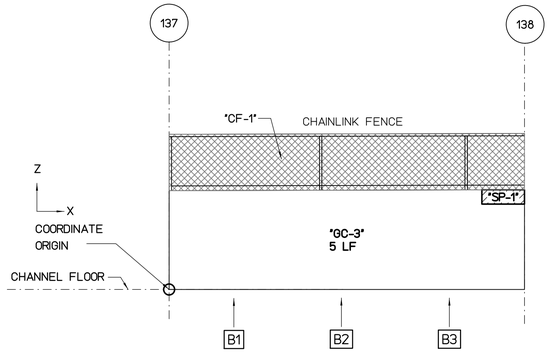


## WALL "B" FLATTEN VIEW

SCALE : 3/16" = 1'-0"

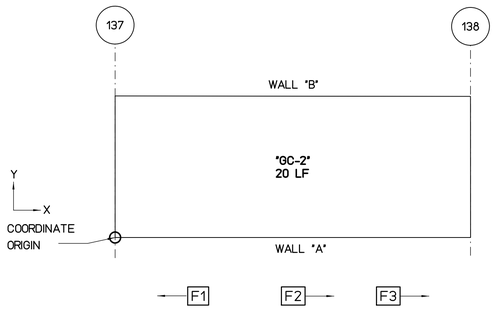


## FLOOR PLAN VIEW

SCALE : 3/16" = 1'-0"

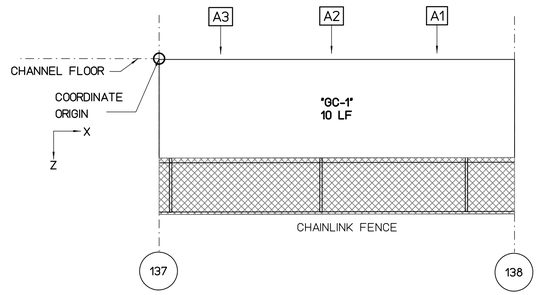


## WALL "A" FLATTEN VIEW

SCALE : 3/16" = 1'-0"

REPAIR LEGEND AND NOTES:

- [2] CRACK AND SPALL REPAIR TYPES, SEE SHEETS SR201 AND SR202 FOR DETAILS. TYPE [*] INDICATES NO-REPAIR
- (A) CHAINLINK FENCE REPAIR TYPES, SEE SHEETS SF201 AND SF202 FOR DETAILS
- 1.0> TOP OF WALL LEANING DISTANCE TOWARD CHANNEL IN INCHES, SEE SHEETS SL101 TO SL207 FOR CONCRETE LINING

PHOTO LEGEND:

- [A1] WALL "A" ELEVATION PHOTO IDENTIFICATION SEE FLATTEN VIEW FOR PHOTO LOCATION
- [B1] WALL "B" ELEVATION PHOTO IDENTIFICATION SEE FLATTEN VIEW FOR PHOTO LOCATION
- [F1] CHANNEL FLOOR PHOTO IDENTIFICATION SEE FLOOR PLAN VIEW FOR PHOTO LOCATION

B1



B2



B3



F1



F2

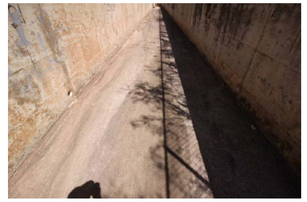

F3

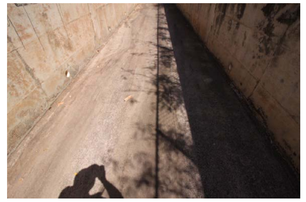

A1



A2



A3



### SPALL REPAIR CHART

| MARK | LOCATION | REPAIR TYPE | SPALL DIMENSION L | SPALL DIMENSION W | SPALL DIMENSION D | SPALL VOLUME | SPALL CENTER COORDINATE X | SPALL CENTER COORDINATE Y OR Z | RATING |
|---|---|---|---|---|---|---|---|---|---|
| "SP-1" | WALL "B" | [3] | 36 | 12 | 2 | 864 | 23.5 | 6 | 7 |

### CHAINLINK FENCE REPAIR CHART

| MARK | LOCATION | REPAIR TYPE | POSTS | TOP RAIL | BOTTOM WIRE | BRACE | FABRIC |
|---|---|---|---|---|---|---|---|
| "CF-1" | WALL "B" | (E) | - | - | - | - | DAMAGED 25'x4' |

### CRACK REPAIR CHART

| MARK | LOCATION | REPAIR TYPE | GENERAL CRACKS (LF) | MAJOR CRACKS WIDTH (IN) | MAJOR CRACKS LENGTH (FT) | MAJOR CRACKS START PNT X | MAJOR CRACKS START PNT Y,Z | MAJOR CRACKS END PNT X | MAJOR CRACKS END PNT Y,Z | RATING |
|---|---|---|---|---|---|---|---|---|---|---|
| "GC-1" | WALL "A" | [*] | 10 | - | - | - | - | - | - | 8 |
| "GC-2" | FLOOR | [*] | 20 | - | - | - | - | - | - | 8 |
| "GC-3" | WALL "B" | [*] | 5 | - | - | - | - | - | - | 9 |

GRAPHIC SCALES:

0 1' 2' 4' 8' 12' 16'

3/16"=1'-0"

| REVISION NO. | DATE | REVISIONS | BY |
|---|---|---|---|

ATHER R. DAR
LICENSED PROFESSIONAL ENGINEER
No. 7808-S
HAWAII U.S.A.
Exp. Date: 4-30-20

THIS WORK WAS PREPARED BY ME OR UNDER MY SUPERVISION AND CONSTRUCTION OF THIS PROJECT WILL BE UNDER MY OBSERVATION

DEPARTMENT OF HAWAIIAN HOMELAND

NANAKULI FLOOD CONTROL
CHANNEL IMPROVEMENTS
NANAKULI VALLEY, OAHU HAWAII

CHANNEL SEGMENT [138] REPAIR DETAILS

| | |
|---|---|
| DESIGNED BY: | TTP |
| DRAWN BY: | AK, AP, DL |
| CHECKED BY: | AD |
| SUPV: | |
| DATE: | 03/05/2019 |


HAWAII ENGINEERING GROUP, Inc.
Civil & Structural Engineers
1088 BISHOP STREET #2506
HONOLULU, HI 96813
Tel: 808-533-2092


JOB NO.

SHEET C138

147 OF 225 SHTS

FILE ___ DRAWER ___ ___ FOLDER ___ ___

Plot date: 15-Apr-2020

Full Size Plot

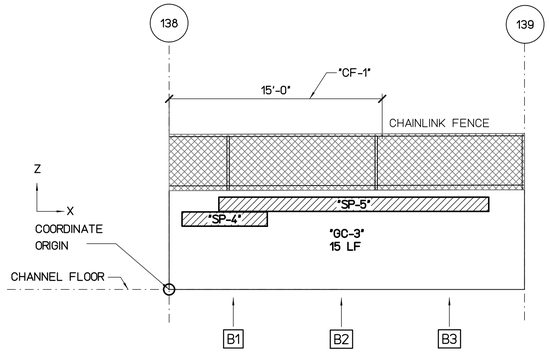


## WALL "B" FLATTEN VIEW

SCALE : 3/16" = 1'-0"

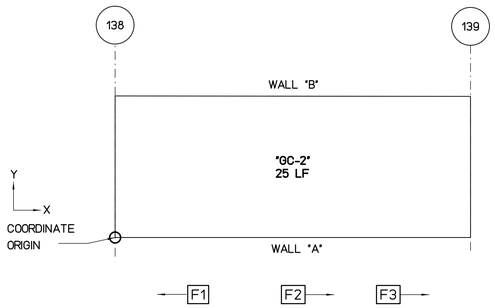


## FLOOR PLAN VIEW

SCALE : 3/16" = 1'-0"

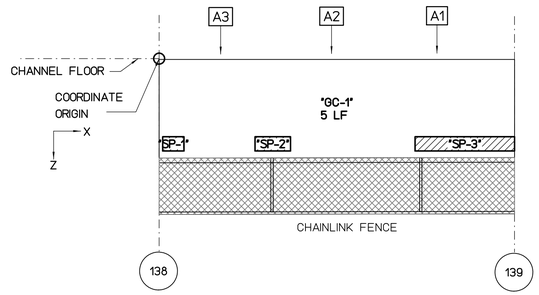


## WALL "A" FLATTEN VIEW

SCALE : 3/16" = 1'-0"

REPAIR LEGEND AND NOTES:

- 2 — CRACK AND SPALL REPAIR TYPES, SEE SHEETS SR201 AND SR202 FOR DETAILS. TYPE * INDICATES NO-REPAIR
- (A) — CHAINLINK FENCE REPAIR TYPES, SEE SHEETS SF201 AND SF202 FOR DETAILS
- 1.0 — TOP OF WALL LEANING DISTANCE TOWARD CHANNEL IN INCHES, SEE SHEETS SL101 TO SL207 FOR CONCRETE LINING

PHOTO LEGEND:

- A1 — WALL "A" ELEVATION PHOTO IDENTIFICATION SEE FLATTEN VIEW FOR PHOTO LOCATION
- B1 — WALL "B" ELEVATION PHOTO IDENTIFICATION SEE FLATTEN VIEW FOR PHOTO LOCATION
- F1 — CHANNEL FLOOR PHOTO IDENTIFICATION SEE FLOOR PLAN VIEW FOR PHOTO LOCATION

B1



B2



B3



F1



F2



F3

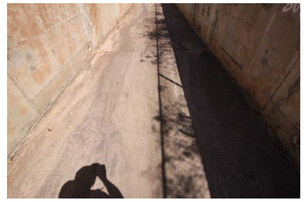

A1



A2



A3



### SPALL REPAIR CHART

| MARK | LOCATION | REPAIR TYPE | SPALL DIMENSION L | SPALL DIMENSION W | SPALL DIMENSION D | SPALL VOLUME | SPALL CENTER COORDINATE X | SPALL CENTER COORDINATE Y OR Z | RATING |
|---|---|---|---|---|---|---|---|---|---|
| "SP-1" | WALL "A" | 3 | 18 | 12 | 2 | 432 | 1 | 6 | 7 |
| "SP-2" | WALL "A" | 3 | 30 | 12 | 2 | 720 | 8 | 6 | 7 |
| "SP-3" | WALL "A" | 3 | 84 | 12 | 2 | 2016 | 22 | 6 | 7 |
| "SP-4" | WALL "B" | 3 | 72 | 12 | 2 | 1728 | 4 | 7 | 6 |
| "SP-5" | WALL "B" | 3 | 228 | 12 | 3 | 8208 | 13 | 6 | 6 |

### CHAINLINK FENCE REPAIR CHART

| MARK | LOCATION | REPAIR TYPE | POSTS | TOP RAIL | BOTTOM WIRE | BRACE | FABRIC |
|---|---|---|---|---|---|---|---|
| "CF-1" | WALL "B" | (E) | - | - | - | - | DAMAGED 15'x4' |

### CRACK REPAIR CHART

| MARK | LOCATION | REPAIR TYPE | GENERAL CRACKS (LF) | MAJOR CRACKS WIDTH (IN) | MAJOR CRACKS LENGTH (FT) | MAJOR CRACKS START PNT X | MAJOR CRACKS START PNT Y,Z | MAJOR CRACKS END PNT X | MAJOR CRACKS END PNT Y,Z | RATING |
|---|---|---|---|---|---|---|---|---|---|---|
| "GC-1" | WALL "A" | * | 5 | - | - | - | - | - | - | 9 |
| "GC-2" | FLOOR | * | 25 | - | - | - | - | - | - | 8 |
| "GC-3" | WALL "B" | * | 15 | - | - | - | - | - | - | 8 |

GRAPHIC SCALES:

0 1' 2' 4' 8' 12' 16'

3/16"=1'-0"

| REVISION NO. | DATE | REVISIONS | BY |
|---|---|---|---|

ATHER R. DAR
LICENSED PROFESSIONAL ENGINEER
No. 7808-S
HAWAII U.S.A.
Exp. Date: 4-30-20

THIS WORK WAS PREPARED BY ME OR UNDER MY SUPERVISION AND CONSTRUCTION OF THIS PROJECT WILL BE UNDER MY OBSERVATION

DEPARTMENT OF HAWAIIAN HOMELAND

# NANAKULI FLOOD CONTROL CHANNEL IMPROVEMENTS NANAKULI VALLEY, OAHU HAWAII

## CHANNEL SEGMENT 139 REPAIR DETAILS

| | |
|---|---|
| DESIGNED BY: | TTP |
| DRAWN BY: | AK, AP, DL |
| CHECKED BY: | AD |
| SUPV: | |
| DATE: | 03/05/2019 |

HAWAII ENGINEERING GROUP, Inc.
Civil & Structural Engineers
1088 BISHOP STREET #2506
HONOLULU, HI 96813
Tel: 808-533-2092

JOB NO.

SHEET C139

148 OF 225 SHTS

FILE ___ DRAWER ___ ___ FOLDER ___ ___

Plot date: 15-Apr-2020

Full Size Plot

Plot date: 15-Apr-2020
Full Size Plot

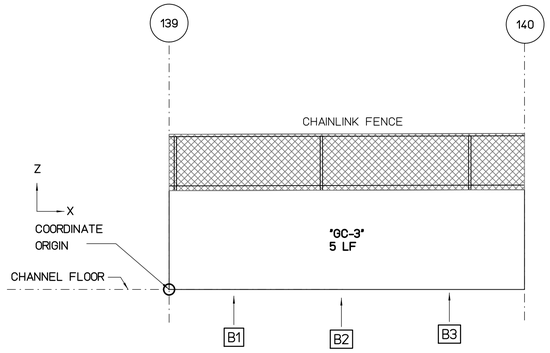


## WALL "B" FLATTEN VIEW

SCALE : 3/16" = 1'-0"

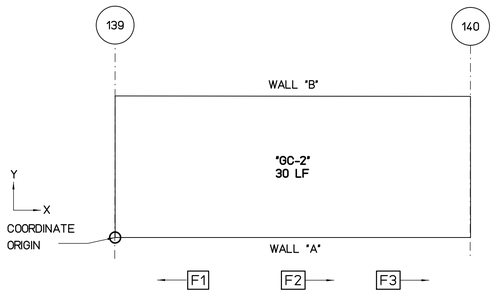


## FLOOR PLAN VIEW

SCALE : 3/16" = 1'-0"

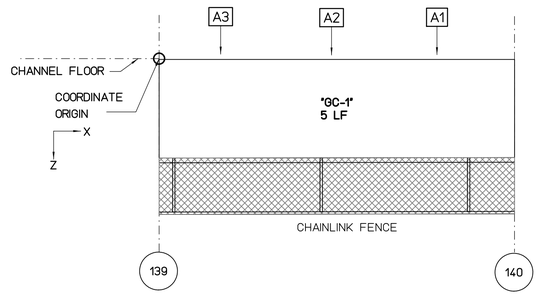


## WALL "A" FLATTEN VIEW

SCALE : 3/16" = 1'-0"

REPAIR LEGEND AND NOTES:

- [2] CRACK AND SPALL REPAIR TYPES, SEE SHEETS SR201 AND SR202 FOR DETAILS. TYPE [*] INDICATES NO-REPAIR
- (A) CHAINLINK FENCE REPAIR TYPES, SEE SHEETS SF201 AND SF202 FOR DETAILS
- [1.0] TOP OF WALL LEANING DISTANCE TOWARD CHANNEL IN INCHES, SEE SHEETS SL101 TO SL207 FOR CONCRETE LINING

PHOTO LEGEND:

- [A1] WALL "A" ELEVATION PHOTO IDENTIFICATION SEE FLATTEN VIEW FOR PHOTO LOCATION
- [B1] WALL "B" ELEVATION PHOTO IDENTIFICATION SEE FLATTEN VIEW FOR PHOTO LOCATION
- [F1] CHANNEL FLOOR PHOTO IDENTIFICATION SEE FLOOR PLAN VIEW FOR PHOTO LOCATION

B1



B2



B3



F1



F2

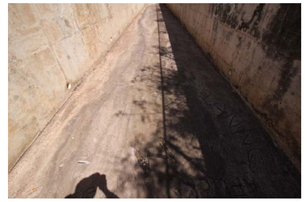

F3



A1



A2



A3



### SPALL REPAIR CHART

| MARK | LOCATION | REPAIR TYPE | SPALL DIMENSION | | | SPALL VOLUME | SPALL CENTER COORDINATE | | RATING |
|---|---|---|---|---|---|---|---|---|---|
| | | | L | W | D | | X | Y OR Z | |
| | | | | | | | | | |
| | | | | | | | | | |
| | | | | | | | | | |
| | | | | | | | | | |
| | | | | | | | | | |
| | | | | | | | | | |
| | | | | | | | | | |
| | | | | | | | | | |

### CHAINLINK FENCE REPAIR CHART

| MARK | LOCATION | REPAIR TYPE | POSTS | TOP RAIL | BOTTOM WIRE | BRACE | FABRIC |
|---|---|---|---|---|---|---|---|
| | | | | | | | |
| | | | | | | | |
| | | | | | | | |
| | | | | | | | |
| | | | | | | | |
| | | | | | | | |
| | | | | | | | |
| | | | | | | | |
| | | | | | | | |
| | | | | | | | |

### CRACK REPAIR CHART

| MARK | LOCATION | REPAIR TYPE | GENERAL CRACKS (LF) | MAJOR CRACKS | | | | | | RATING |
|---|---|---|---|---|---|---|---|---|---|---|
| | | | | WIDTH (IN) | LENGTH (FT) | START PNT X | START PNT Y,Z | END PNT X | END PNT Y,Z | |
| "GC-1" | WALL "A" | [*] | 5 | - | - | - | - | - | - | 9 |
| "GC-2" | FLOOR | [*] | 30 | - | - | - | - | - | - | 8 |
| "GC-3" | WALL "B" | [*] | 5 | - | - | - | - | - | - | 9 |
| | | | | | | | | | | |
| | | | | | | | | | | |
| | | | | | | | | | | |
| | | | | | | | | | | |

GRAPHIC SCALES:

0 1' 2' 4' 8' 12' 16'

3/16"=1'-0"

| REVISION NO. | DATE | REVISIONS | BY |
|---|---|---|---|
| | | | |

ATHER R. DAR
LICENSED PROFESSIONAL ENGINEER
No. 7808-S
HAWAII U.S.A.

Exp. Date: 4-30-20

THIS WORK WAS PREPARED BY ME OR UNDER MY SUPERVISION AND CONSTRUCTION OF THIS PROJECT WILL BE UNDER MY OBSERVATION

DEPARTMENT OF HAWAIIAN HOMELAND

# NANAKULI FLOOD CONTROL CHANNEL IMPROVEMENTS NANAKULI VALLEY, OAHU HAWAII

## CHANNEL SEGMENT [140] REPAIR DETAILS

| | |
|---|---|
| DESIGNED BY: | TTP |
| DRAWN BY: | AK, AP, DL |
| CHECKED BY: | AD |
| SUPV: | |
| DATE: | 03/05/2019 |

HAWAII ENGINEERING GROUP, Inc.
Civil & Structural Engineers
1088 BISHOP STREET #2506
HONOLULU, HI 96813
Tel: 808-533-2092

JOB NO.

SHEET C140

140 OF 225 SHTS

FILE ___ DRAWER ___ ___ FOLDER ___ ___

Plot date: 15-Apr-2020

Full Size Plot

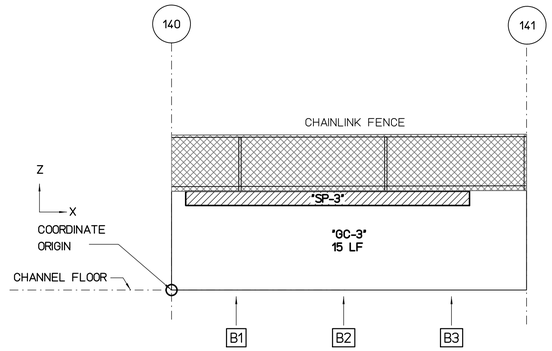


## WALL "B" FLATTEN VIEW

SCALE : 3/16" = 1'-0"

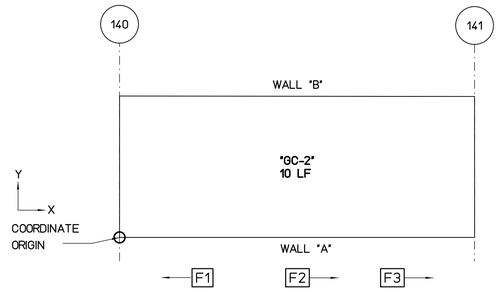


## FLOOR PLAN VIEW

SCALE : 3/16" = 1'-0"

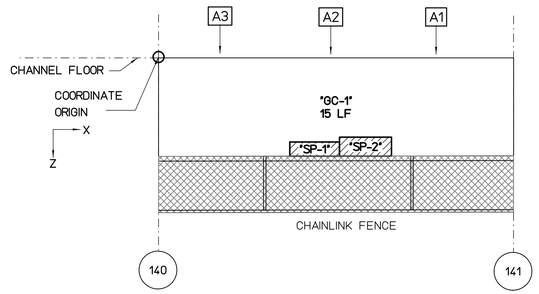


## WALL "A" FLATTEN VIEW

SCALE : 3/16" = 1'-0"

REPAIR LEGEND AND NOTES:

- 2 — CRACK AND SPALL REPAIR TYPES, SEE SHEETS SR201 AND SR202 FOR DETAILS. TYPE ⊠ INDICATES NO-REPAIR
- Ⓐ — CHAINLINK FENCE REPAIR TYPES, SEE SHEETS SF201 AND SF202 FOR DETAILS
- 1.0 — TOP OF WALL LEANING DISTANCE TOWARD CHANNEL IN INCHES, SEE SHEETS SL101 TO SL207 FOR CONCRETE LINING

PHOTO LEGEND:

- A1 — WALL "A" ELEVATION PHOTO IDENTIFICATION SEE FLATTEN VIEW FOR PHOTO LOCATION
- B1 — WALL "B" ELEVATION PHOTO IDENTIFICATION SEE FLATTEN VIEW FOR PHOTO LOCATION
- F1 — CHANNEL FLOOR PHOTO IDENTIFICATION SEE FLOOR PLAN VIEW FOR PHOTO LOCATION

B1



B2



B3



F1



F2



F3

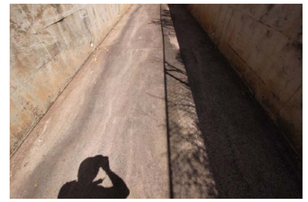

A1



A2



A3



### SPALL REPAIR CHART

| MARK | LOCATION | REPAIR TYPE | SPALL DIMENSION L | SPALL DIMENSION W | SPALL DIMENSION D | SPALL VOLUME | SPALL CENTER COORDINATE X | SPALL CENTER COORDINATE Y OR Z | RATING |
|---|---|---|---|---|---|---|---|---|---|
| "SP-1" | WALL "A" | 3 | 42 | 12 | 2 | 1008 | 11 | 6.5 | 7 |
| "SP-2" | WALL "A" | 3 | 44 | 16 | 2 | 1408 | 14.6 | 6.3 | 7 |
| "SP-3" | WALL "B" | 3 | 240 | 12 | 3 | 8640 | 11 | 6.5 | 6 |

### CHAINLINK FENCE REPAIR CHART

| MARK | LOCATION | REPAIR TYPE | POSTS | TOP RAIL | BOTTOM WIRE | BRACE | FABRIC |
|---|---|---|---|---|---|---|---|

### CRACK REPAIR CHART

| MARK | LOCATION | REPAIR TYPE | GENERAL CRACKS (LF) | MAJOR CRACKS WIDTH (IN) | MAJOR CRACKS LENGTH (FT) | MAJOR CRACKS START PNT X | MAJOR CRACKS START PNT Y,Z | MAJOR CRACKS END PNT X | MAJOR CRACKS END PNT Y,Z | RATING |
|---|---|---|---|---|---|---|---|---|---|---|
| "GC-1" | WALL "A" | ⊠ | 15 | - | - | - | - | - | - | 8 |
| "GC-2" | FLOOR | ⊠ | 10 | - | - | - | - | - | - | 8 |
| "GC-3" | WALL "B" | ⊠ | 15 | - | - | - | - | - | - | 8 |

GRAPHIC SCALES:

0 1' 2' 4' 8' 12' 16'

3/16"=1'-0"

| REVISION NO. | DATE | REVISIONS | BY |
|---|---|---|---|

ATHER R DAR — LICENSED PROFESSIONAL ENGINEER — No. 7808-S — HAWAII U.S.A.

Exp. Date: 4-30-20

THIS WORK WAS PREPARED BY ME OR UNDER MY SUPERVISION AND CONSTRUCTION OF THIS PROJECT WILL BE UNDER MY OBSERVATION

DEPARTMENT OF HAWAIIAN HOMELAND

# NANAKULI FLOOD CONTROL CHANNEL IMPROVEMENTS NANAKULI VALLEY, OAHU HAWAII

CHANNEL SEGMENT 141 REPAIR DETAILS

| | |
|---|---|
| DESIGNED BY: | TTP |
| DRAWN BY: | AK, AP, DL |
| CHECKED BY: | AD |
| SUPV: | |
| DATE: | 03/05/2019 |

HAWAII ENGINEERING GROUP, Inc.
Civil & Structural Engineers
1088 BISHOP STREET #2506
HONOLULU, HI 96813
Tel: 808-533-2092

JOB NO.

SHEET C141

1500F 225 SHTS

FILE ___ DRAWER ___ ___ FOLDER ___ ___

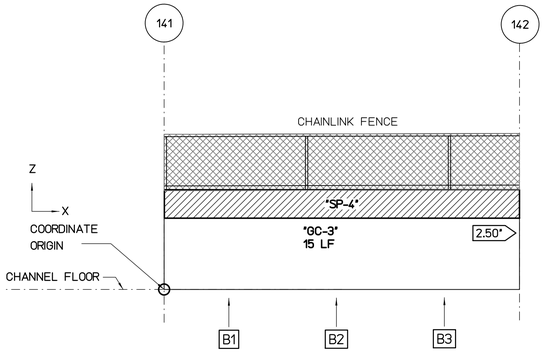


## WALL "B" FLATTEN VIEW

SCALE : 3/16" = 1'-0"

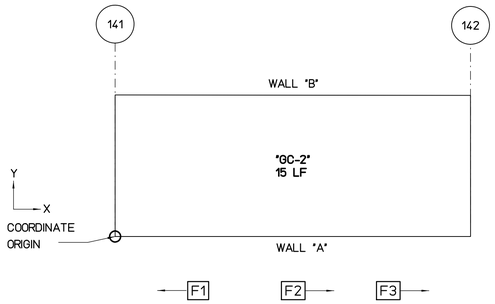


## FLOOR PLAN VIEW

SCALE : 3/16" = 1'-0"

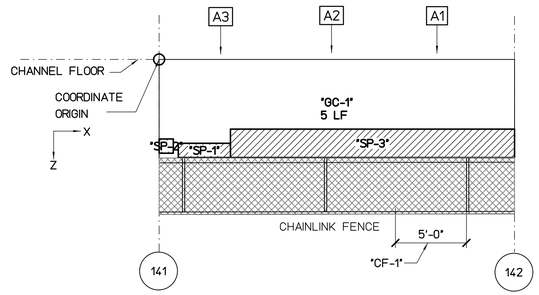


## WALL "A" FLATTEN VIEW

SCALE : 3/16" = 1'-0"

REPAIR LEGEND AND NOTES:

- [2] CRACK AND SPALL REPAIR TYPES, SEE SHEETS SR201 AND SR202 FOR DETAILS. TYPE [*] INDICATES NO-REPAIR
- (A) CHAINLINK FENCE REPAIR TYPES, SEE SHEETS SF201 AND SF202 FOR DETAILS
- 1.0> TOP OF WALL LEANING DISTANCE TOWARD CHANNEL IN INCHES, SEE SHEETS SL101 TO SL207 FOR CONCRETE LINING

PHOTO LEGEND:

- [A1] WALL "A" ELEVATION PHOTO IDENTIFICATION SEE FLATTEN VIEW FOR PHOTO LOCATION
- [B1] WALL "B" ELEVATION PHOTO IDENTIFICATION SEE FLATTEN VIEW FOR PHOTO LOCATION
- [F1] CHANNEL FLOOR PHOTO IDENTIFICATION SEE FLOOR PLAN VIEW FOR PHOTO LOCATION

B1



B2



B3



F1



F2

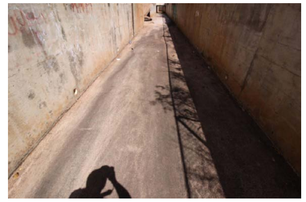

F3



A1



A2



A3



### SPALL REPAIR CHART

| MARK | LOCATION | REPAIR TYPE | SPALL DIMENSION L | SPALL DIMENSION W | SPALL DIMENSION D | SPALL VOLUME | SPALL CENTER COORDINATE X | SPALL CENTER COORDINATE Y OR Z | RATING |
|---|---|---|---|---|---|---|---|---|---|
| "SP-1" | WALL "A" | [*] | 44 | 12 | 2 | 1056 | 3.2 | 6.5 | 7 |
| "SP-2" | WALL "A" | [*] | 12 | 12 | 2 | 288 | 0.5 | 6.2 | 7 |
| "SP-3" | WALL "A" | [*] | 240 | 24 | 3 | 17280 | 15 | 6 | 6 |
| "SP-4" | WALL "B" | [*] | 300 | 24 | 3 | 21600 | 12.5 | 6 | 6 |

### CHAINLINK FENCE REPAIR CHART

| MARK | LOCATION | REPAIR TYPE | POSTS | TOP RAIL | BOTTOM WIRE | BRACE | FABRIC |
|---|---|---|---|---|---|---|---|
| "CF-1" | WALL "A" | (C) | - | DAMAGED 5' | - | - | - |

### CRACK REPAIR CHART

| MARK | LOCATION | REPAIR TYPE | GENERAL CRACKS (LF) | MAJOR CRACKS WIDTH (IN) | MAJOR CRACKS LENGTH (FT) | START PNT X | START PNT Y,Z | END PNT X | END PNT Y,Z | RATING |
|---|---|---|---|---|---|---|---|---|---|---|
| "GC-1" | WALL "A" | [*] | 5 | - | - | - | - | - | - | 9 |
| "GC-2" | FLOOR | [*] | 15 | - | - | - | - | - | - | 8 |
| "GC-3" | WALL "B" | [*] | 15 | - | - | - | - | - | - | 8 |

NOTES:

1- CONCRETE LINING IS PROVIDED IN THIS SEGMENT SEE SHEET SL202

2- THERE IS NO SPALL AND CRACK REPAIRS IN THIS SEGMENT

GRAPHIC SCALES:

0 1' 2' 4' 8' 12' 16'

3/16"=1'-0"

| REVISION NO. | DATE | REVISIONS | BY |
|---|---|---|---|

ATHER R. DAR
LICENSED PROFESSIONAL ENGINEER
No. 7808-S
HAWAII U.S.A.

Exp. Date: 4-30-20

THIS WORK WAS PREPARED BY ME OR UNDER MY SUPERVISION AND CONSTRUCTION OF THIS PROJECT WILL BE UNDER MY OBSERVATION

DEPARTMENT OF HAWAIIAN HOMELAND

# NANAKULI FLOOD CONTROL CHANNEL IMPROVEMENTS NANAKULI VALLEY, OAHU HAWAII

CHANNEL SEGMENT [142] REPAIR DETAILS

| | |
|---|---|
| DESIGNED BY: | TTP |
| DRAWN BY: | AK, AP, DL |
| CHECKED BY: | AD |
| SUPV: | |
| DATE: | 03/05/2019 |


HAWAII ENGINEERING GROUP, Inc.
Civil & Structural Engineers
1088 BISHOP STREET #2506
HONOLULU, HI 96813
Tel: 808-533-2092


JOB NO.

SHEET C142

151 OF 225 SHTS

FILE ___ DRAWER ___ ___ FOLDER ___ ___

Plot date: 15-Apr-2020

Full Size Plot

Plot date: 15-Apr-2020
Full Size Plot

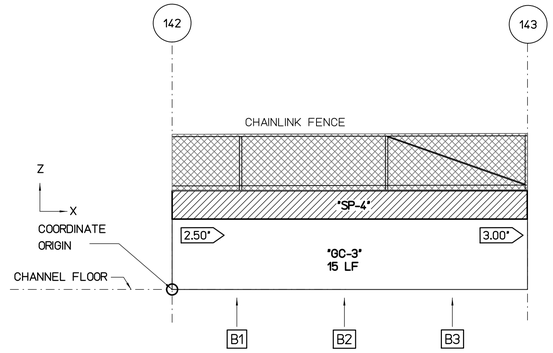


## WALL "B" FLATTEN VIEW

SCALE : 3/16" = 1'-0"

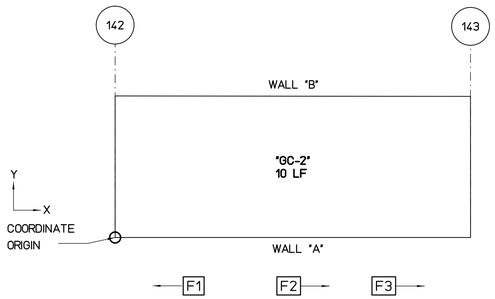


## FLOOR PLAN VIEW

SCALE : 3/16" = 1'-0"

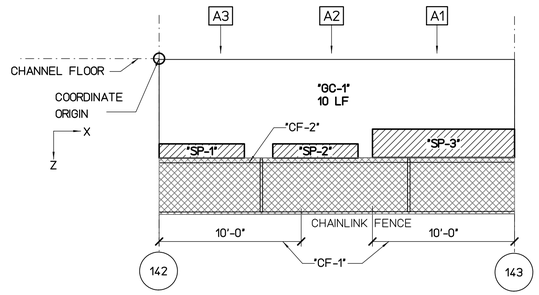


## WALL "A" FLATTEN VIEW

SCALE : 3/16" = 1'-0"

REPAIR LEGEND AND NOTES:

- 2 — CRACK AND SPALL REPAIR TYPES, SEE SHEETS SR201 AND SR202 FOR DETAILS. TYPE [*] INDICATES NO-REPAIR
- (A) — CHAINLINK FENCE REPAIR TYPES, SEE SHEETS SF201 AND SF202 FOR DETAILS
- 1.0 — TOP OF WALL LEANING DISTANCE TOWARD CHANNEL IN INCHES, SEE SHEETS SL101 TO SL207 FOR CONCRETE LINING

PHOTO LEGEND:

- A1 — WALL "A" ELEVATION PHOTO IDENTIFICATION SEE FLATTEN VIEW FOR PHOTO LOCATION
- B1 — WALL "B" ELEVATION PHOTO IDENTIFICATION SEE FLATTEN VIEW FOR PHOTO LOCATION
- F1 — CHANNEL FLOOR PHOTO IDENTIFICATION SEE FLOOR PLAN VIEW FOR PHOTO LOCATION

B1



B2



B3



F1



F2



F3



A1



A2



A3




### SPALL REPAIR CHART

| MARK | LOCATION | REPAIR TYPE | SPALL DIMENSION L | SPALL DIMENSION W | SPALL DIMENSION D | SPALL VOLUME | SPALL CENTER COORDINATE X | SPALL CENTER COORDINATE Y OR Z | RATING |
|---|---|---|---|---|---|---|---|---|---|
| "SP-1" | WALL "A" | [*] | 72 | 12 | 2 | 1728 | 3 | 6 | 7 |
| "SP-2" | WALL "A" | [*] | 72 | 12 | 2 | 1728 | 11 | 6 | 7 |
| "SP-3" | WALL "A" | [*] | 120 | 24 | 2 | 5760 | 20 | 6 | 7 |
| "SP-4" | WALL "B" | [*] | 300 | 24 | 4 | 28800 | 13 | 5 | 6 |

### CHAINLINK FENCE REPAIR CHART

| MARK | LOCATION | REPAIR TYPE | POSTS | TOP RAIL | BOTTOM WIRE | BRACE | FABRIC |
|---|---|---|---|---|---|---|---|
| "CF-1" | WALL "A" | (C) | - | DAMAGED 20' | - | - | - |
| "CF-2" | WALL "A" | (D) | - | - | DAMAGED 25' | - | - |

### CRACK REPAIR CHART

| MARK | LOCATION | REPAIR TYPE | GENERAL CRACKS (LF) | MAJOR CRACKS WIDTH (IN) | MAJOR CRACKS LENGTH (FT) | START PNT X | START PNT Y,Z | END PNT X | END PNT Y,Z | RATING |
|---|---|---|---|---|---|---|---|---|---|---|
| "GC-1" | WALL "A" | [*] | 10 | - | - | - | - | - | - | 8 |
| "GC-2" | FLOOR | [*] | 10 | - | - | - | - | - | - | 8 |
| "GC-3" | WALL "B" | [*] | 15 | - | - | - | - | - | - | 8 |

NOTES:

1- CONCRETE LINING IS PROVIDED IN THIS SEGMENT SEE SHEET SL202

2- THERE IS NO SPALL AND CRACK REPAIRS IN THIS SEGMENT

GRAPHIC SCALES:

0 1' 2' 4' 8' 12' 16'

3/16"=1'-0"

| REVISION NO. | DATE | REVISIONS | BY |
|---|---|---|---|

ATHER R. DAR
LICENSED PROFESSIONAL ENGINEER
No. 7808-S
HAWAII U.S.A.
Exp. Date: 4-30-20

THIS WORK WAS PREPARED BY ME OR UNDER MY SUPERVISION AND CONSTRUCTION OF THIS PROJECT WILL BE UNDER MY OBSERVATION

DEPARTMENT OF HAWAIIAN HOMELAND

# NANAKULI FLOOD CONTROL CHANNEL IMPROVEMENTS NANAKULI VALLEY, OAHU HAWAII

## CHANNEL SEGMENT 143 REPAIR DETAILS

| | |
|---|---|
| DESIGNED BY: | TTP |
| DRAWN BY: | AK, AP, DL |
| CHECKED BY: | AD |
| SUPV: | |
| DATE: | 03/05/2019 |

HAWAII ENGINEERING GROUP, Inc.
Civil & Structural Engineers
1088 BISHOP STREET #2506
HONOLULU, HI 96813
Tel: 808-533-2092

JOB NO.

SHEET C143
152OF 225 SHTS

FILE ___ DRAWER ___ ___ FOLDER ___ ___

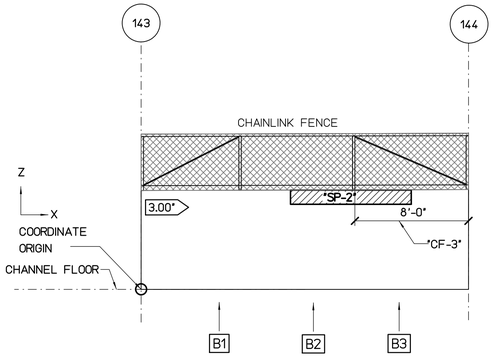


## WALL "B" FLATTEN VIEW

SCALE : 3/16" = 1'-0"

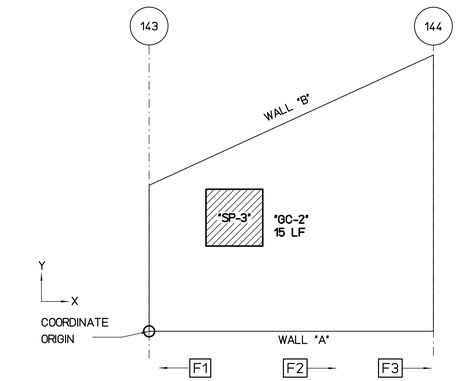


## FLOOR PLAN VIEW

SCALE : 3/16" = 1'-0"

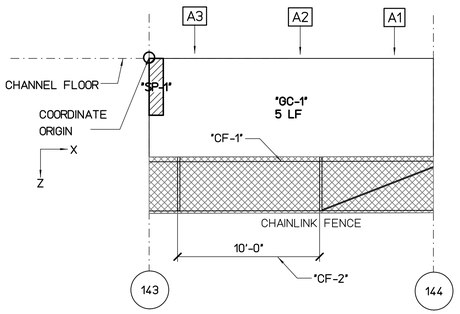


## WALL "A" FLATTEN VIEW

SCALE : 3/16" = 1'-0"

REPAIR LEGEND AND NOTES:

- 2 — CRACK AND SPALL REPAIR TYPES, SEE SHEETS SR201 AND SR202 FOR DETAILS. TYPE [*] INDICATES NO-REPAIR
- (A) — CHAINLINK FENCE REPAIR TYPES, SEE SHEETS SF201 AND SF202 FOR DETAILS
- 1.0 — TOP OF WALL LEANING DISTANCE TOWARD CHANNEL IN INCHES, SEE SHEETS SL101 TO SL207 FOR CONCRETE LINING

PHOTO LEGEND:

- A1 — WALL "A" ELEVATION PHOTO IDENTIFICATION SEE FLATTEN VIEW FOR PHOTO LOCATION
- B1 — WALL "B" ELEVATION PHOTO IDENTIFICATION SEE FLATTEN VIEW FOR PHOTO LOCATION
- F1 — CHANNEL FLOOR PHOTO IDENTIFICATION SEE FLOOR PLAN VIEW FOR PHOTO LOCATION

B1



B2



B3



F1



F2



F3



A1



A2



A3



### SPALL REPAIR CHART

| MARK | LOCATION | REPAIR TYPE | SPALL DIMENSION L | SPALL DIMENSION W | SPALL DIMENSION D | SPALL VOLUME | SPALL CENTER COORDINATE X | SPALL CENTER COORDINATE Y OR Z | RATING |
|---|---|---|---|---|---|---|---|---|---|
| "SP-1" | WALL "A" | [*] | 12 | 48 | 3 | 1728 | 0 | 3 | 6 |
| "SP-2" | WALL "B" | [*] | 102 | 12 | 4 | 4896 | 15 | 6.5 | 6 |
| "SP-3" | FLOOR | [*] | 48 | 48 | 2 | 4608 | 6 | 8 | 7 |

### CHAINLINK FENCE REPAIR CHART

| MARK | LOCATION | REPAIR TYPE | POSTS | TOP RAIL | BOTTOM WIRE | BRACE | FABRIC |
|---|---|---|---|---|---|---|---|
| "CF-1" | WALL "A" | (D) | - | - | DAMAGED 20' | - | - |
| "CF-2" | WALL "A" | (C) | - | DAMAGED 10' | - | - | - |
| "CF-3" | WALL "B" | (D) | | - | DAMAGED 8' | - | - |

### CRACK REPAIR CHART

| MARK | LOCATION | REPAIR TYPE | GENERAL CRACKS (LF) | MAJOR CRACKS WIDTH (IN) | MAJOR CRACKS LENGTH (FT) | MAJOR CRACKS START PNT X | MAJOR CRACKS START PNT Y,Z | MAJOR CRACKS END PNT X | MAJOR CRACKS END PNT Y,Z | RATING |
|---|---|---|---|---|---|---|---|---|---|---|
| "GC-1" | WALL "A" | [*] | 5 | - | - | - | - | - | - | 9 |
| "GC-2" | FLOOR | [*] | 15 | - | - | - | - | - | - | 8 |

NOTES:

1- CONCRETE LINING IS PROVIDED IN THIS SEGMENT SEE SHEET SL202

2- THERE IS NO SPALL AND CRACK REPAIRS IN THIS SEGMENT

GRAPHIC SCALES:

0 1' 2' 4' 8' 12' 16'

3/16"=1'-0"

| REVISION NO. | DATE | REVISIONS | BY |
|---|---|---|---|

ATHER R. DAR
LICENSED PROFESSIONAL ENGINEER
No. 7808-S
HAWAII U.S.A.
Exp. Date: 4-30-20

THIS WORK WAS PREPARED BY ME OR UNDER MY SUPERVISION AND CONSTRUCTION OF THIS PROJECT WILL BE UNDER MY OBSERVATION

DEPARTMENT OF HAWAIIAN HOMELAND

# NANAKULI FLOOD CONTROL CHANNEL IMPROVEMENTS NANAKULI VALLEY, OAHU HAWAII

## CHANNEL SEGMENT 144 REPAIR DETAILS

| | |
|---|---|
| DESIGNED BY: | TTP |
| DRAWN BY: | AK, AP, DL |
| CHECKED BY: | AD |
| SUPV: | |
| DATE: | 03/05/2019 |


HAWAII ENGINEERING GROUP, Inc.
Civil & Structural Engineers
1088 BISHOP STREET #2506
HONOLULU, HI 96813
Tel: 808-533-2092


JOB NO.

SHEET C144

153 OF 225 SHTS

FILE ___ DRAWER ___ ___ FOLDER ___ ___

Plot date: 15-Apr-2020

Full Size Plot

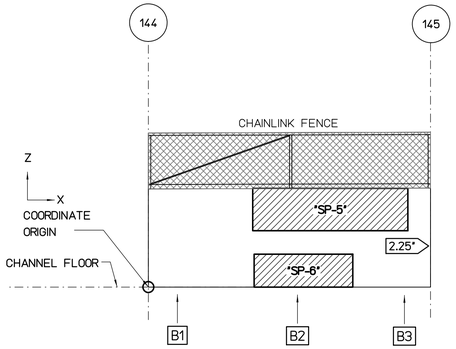


## WALL "B" FLATTEN VIEW

SCALE : 3/16" = 1'-0"

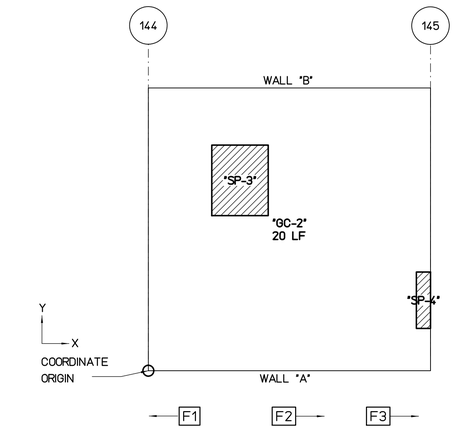


## FLOOR PLAN VIEW

SCALE : 3/16" = 1'-0"

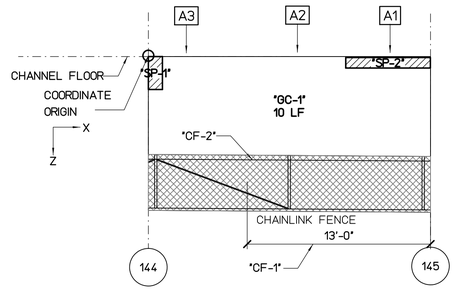


## WALL "A" FLATTEN VIEW

SCALE : 3/16" = 1'-0"

REPAIR LEGEND AND NOTES:

- 2 — CRACK AND SPALL REPAIR TYPES, SEE SHEETS SR201 AND SR202 FOR DETAILS. TYPE ⊠ INDICATES NO-REPAIR
- Ⓐ — CHAINLINK FENCE REPAIR TYPES, SEE SHEETS SF201 AND SF202 FOR DETAILS
- 1.0 — TOP OF WALL LEANING DISTANCE TOWARD CHANNEL IN INCHES, SEE SHEETS SL101 TO SL207 FOR CONCRETE LINING

PHOTO LEGEND:

- A1 — WALL "A" ELEVATION PHOTO IDENTIFICATION SEE FLATTEN VIEW FOR PHOTO LOCATION
- B1 — WALL "B" ELEVATION PHOTO IDENTIFICATION SEE FLATTEN VIEW FOR PHOTO LOCATION
- F1 — CHANNEL FLOOR PHOTO IDENTIFICATION SEE FLOOR PLAN VIEW FOR PHOTO LOCATION

B1



B2



B3



F1



F2



F3



A1



A2



A3



### SPALL REPAIR CHART

| MARK | LOCATION | REPAIR TYPE | SPALL DIMENSION L | W | D | SPALL VOLUME | SPALL CENTER COORDINATE X | Y OR Z | RATING |
|---|---|---|---|---|---|---|---|---|---|
| "SP-1" | WALL "A" | ⊠ | 12 | 28 | 2 | 672 | 0.5 | 6 | 7 |
| "SP-2" | WALL "A" | ⊠ | 72 | 9 | 2 | 1296 | 17 | 0.5 | 7 |
| "SP-3" | FLOOR | ⊠ | 48 | 60 | 2 | 5760 | 6.5 | 13.5 | 7 |
| "SP-4" | FLOOR | ⊠ | 12 | 48 | 2 | 1152 | 25 | 4 | 7 |
| "SP-5" | WALL "B" | ⊠ | 132 | 36 | 4 | 19008 | 13 | 5.5 | 6 |
| "SP-6" | WALL "B" | ⊠ | 84 | 28 | 3 | 7056 | 11 | 1.5 | 6 |
| | | | | | | | | | |
| | | | | | | | | | |

### CHAINLINK FENCE REPAIR CHART

| MARK | LOCATION | REPAIR TYPE | POSTS | TOP RAIL | BOTTOM WIRE | BRACE | FABRIC |
|---|---|---|---|---|---|---|---|
| "CF-1" | WALL "A" | Ⓔ | - | - | - | - | DAMAGED 13'x4' |
| "CF-2" | WALL "A" | Ⓓ | - | - | DAMAGED 20' | - | - |
| | | | | | | | |
| | | | | | | | |
| | | | | | | | |
| | | | | | | | |
| | | | | | | | |
| | | | | | | | |
| | | | | | | | |

### CRACK REPAIR CHART

| MARK | LOCATION | REPAIR TYPE | GENERAL CRACKS (LF) | MAJOR CRACKS WIDTH (IN) | LENGTH (FT) | START PNT X | START PNT Y,Z | END PNT X | END PNT Y,Z | RATING |
|---|---|---|---|---|---|---|---|---|---|---|
| "GC-1" | WALL "A" | ⊠ | 10 | - | - | - | - | - | - | 8 |
| "GC-2" | FLOOR | ⊠ | 20 | - | - | - | - | - | - | 8 |
| | | | | | | | | | | |
| | | | | | | | | | | |
| | | | | | | | | | | |
| | | | | | | | | | | |
| | | | | | | | | | | |

NOTES:

1- CONCRETE LINING IS PROVIDED IN THIS SEGMENT SEE SHEET SL202

2- THERE IS NO SPALL AND CRACK REPAIRS IN THIS SEGMENT

GRAPHIC SCALES:

0 1' 2' 4' 8' 12' 16'

3/16"=1'-0"

| REVISION NO. | DATE | REVISIONS | BY |
|---|---|---|---|
| | | | |

ATHER R DAR
LICENSED PROFESSIONAL ENGINEER
No. 7808-S
HAWAII U.S.A.

Exp. Date: 4-30-20

THIS WORK WAS PREPARED BY ME OR UNDER MY SUPERVISION AND CONSTRUCTION OF THIS PROJECT WILL BE UNDER MY OBSERVATION

DEPARTMENT OF HAWAIIAN HOMELAND

NANAKULI FLOOD CONTROL CHANNEL IMPROVEMENTS NANAKULI VALLEY, OAHU HAWAII

CHANNEL SEGMENT 145 REPAIR DETAILS

| | |
|---|---|
| DESIGNED BY: | TTP |
| DRAWN BY: | AK, AP, DL |
| CHECKED BY: | AD |
| SUPV: | |
| DATE: | 03/05/2019 |

HAWAII ENGINEERING GROUP, Inc.
Civil & Structural Engineers
1088 BISHOP STREET #2506
HONOLULU, HI 96813
Tel: 808-533-2092

JOB NO.

SHEET C145

154 OF 225 SHTS

FILE ___ DRAWER ___ ___ FOLDER ___ ___

Plot date: 15-Apr-2020

Full Size Plot

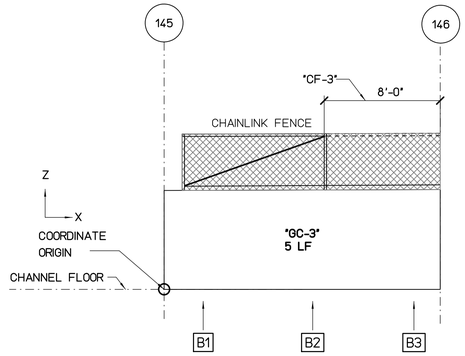


## WALL "B" FLATTEN VIEW

SCALE : 3/16" = 1'-0"

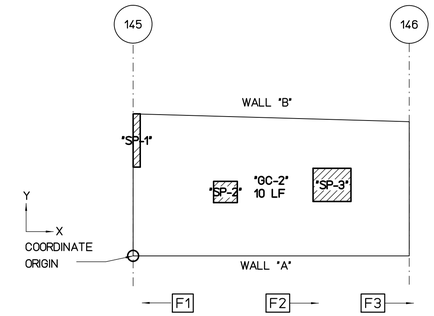


## FLOOR PLAN VIEW

SCALE : 3/16" = 1'-0"

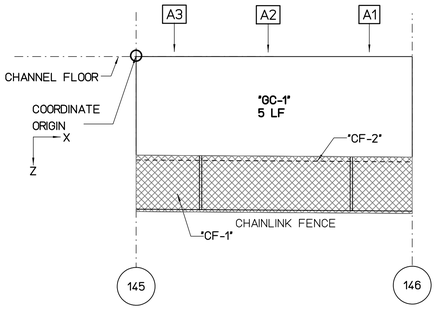


## WALL "A" FLATTEN VIEW

SCALE : 3/16" = 1'-0"

REPAIR LEGEND AND NOTES:

- 2 — CRACK AND SPALL REPAIR TYPES, SEE SHEETS SR201 AND SR202 FOR DETAILS. TYPE [*] INDICATES NO-REPAIR
- (A) — CHAINLINK FENCE REPAIR TYPES, SEE SHEETS SF201 AND SF202 FOR DETAILS
- 1.0 — TOP OF WALL LEANING DISTANCE TOWARD CHANNEL IN INCHES, SEE SHEETS SL101 TO SL207 FOR CONCRETE LINING

PHOTO LEGEND:

- A1 — WALL "A" ELEVATION PHOTO IDENTIFICATION SEE FLATTEN VIEW FOR PHOTO LOCATION
- B1 — WALL "B" ELEVATION PHOTO IDENTIFICATION SEE FLATTEN VIEW FOR PHOTO LOCATION
- F1 — CHANNEL FLOOR PHOTO IDENTIFICATION SEE FLOOR PLAN VIEW FOR PHOTO LOCATION

B1



B2



B3



F1



F2



F3



A1



A2



A3



### SPALL REPAIR CHART

| MARK | LOCATION | REPAIR TYPE | SPALL DIMENSION L | SPALL DIMENSION W | SPALL DIMENSION D | SPALL VOLUME | SPALL CENTER COORDINATE X | SPALL CENTER COORDINATE Y OR Z | RATING |
|---|---|---|---|---|---|---|---|---|---|
| "SP-1" | FLOOR | [*] | 6 | 45 | 2 | 540 | 1.9 | 8 | 7 |
| "SP-2" | FLOOR | [*] | 20 | 18 | 2 | 720 | 6.5 | 4.5 | 7 |
| "SP-3" | FLOOR | [*] | 32 | 28 | 2 | 1792 | 14 | 5 | 7 |

### CHAINLINK FENCE REPAIR CHART

| MARK | LOCATION | REPAIR TYPE | POSTS | TOP RAIL | BOTTOM WIRE | BRACE | FABRIC |
|---|---|---|---|---|---|---|---|
| "CF-1" | WALL "A" | (E) | - | - | - | - | DAMAGED 20'x4' |
| "CF-2" | WALL "A" | (D) | - | - | MISSING 20' | - | - |
| "CF-3" | WALL "B" | (C) | - | MISSING 8' | - | - | - |

### CRACK REPAIR CHART

| MARK | LOCATION | REPAIR TYPE | GENERAL CRACKS (LF) | MAJOR CRACKS WIDTH (IN) | MAJOR CRACKS LENGTH (FT) | MAJOR CRACKS START PNT X | MAJOR CRACKS START PNT Y,Z | MAJOR CRACKS END PNT X | MAJOR CRACKS END PNT Y,Z | RATING |
|---|---|---|---|---|---|---|---|---|---|---|
| "GC-1" | WALL "A" | [*] | 5 | - | - | - | - | - | - | 9 |
| "GC-2" | FLOOR | [*] | 10 | - | - | - | - | - | - | 8 |
| "GC-3" | WALL "B" | [*] | 5 | - | - | - | - | - | - | 9 |

NOTES:

1- CONCRETE LINING IS PROVIDED IN THIS SEGMENT SEE SHEET SL202

2- THERE IS NO SPALL AND CRACK REPAIRS IN THIS SEGMENT

GRAPHIC SCALES:

0 1' 2' 4' 8' 12' 16'

3/16"=1'-0"

| REVISION NO. | DATE | REVISIONS | BY |
|---|---|---|---|

ATHER R. DAR
LICENSED PROFESSIONAL ENGINEER
No. 7808-S
HAWAII U.S.A.

Exp. Date: 4-30-20

THIS WORK WAS PREPARED BY ME OR UNDER MY SUPERVISION AND CONSTRUCTION OF THIS PROJECT WILL BE UNDER MY OBSERVATION

DEPARTMENT OF HAWAIIAN HOMELAND

# NANAKULI FLOOD CONTROL CHANNEL IMPROVEMENTS NANAKULI VALLEY, OAHU HAWAII

## CHANNEL SEGMENT 146 REPAIR DETAILS

| | |
|---|---|
| DESIGNED BY: | TTP |
| DRAWN BY: | AK, AP, DL |
| CHECKED BY: | AD |
| SUPV: | |
| DATE: | 03/05/2019 |


HAWAII ENGINEERING GROUP, Inc.
Civil & Structural Engineers
1088 BISHOP STREET #2506
HONOLULU, HI 96813
Tel: 808-533-2092


JOB NO.

SHEET C146

155 OF 225 SHTS

FILE ___ DRAWER ___ ___ FOLDER ___ ___

Plot date: 15-Apr-2020

Full Size Plot

Plot date: 15-Apr-2020
Full Size Plot

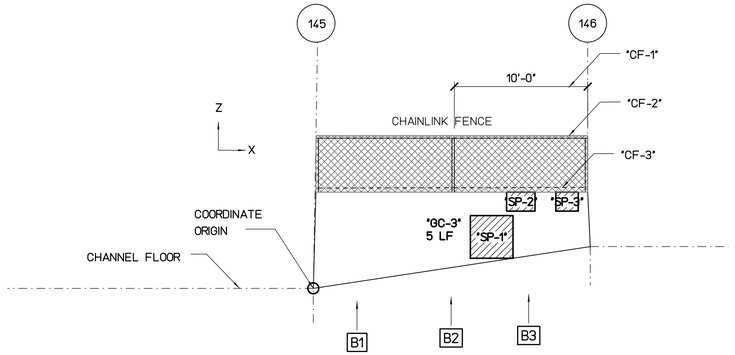


## WALL "B" FLATTEN VIEW

SCALE : 3/16" = 1'-0"

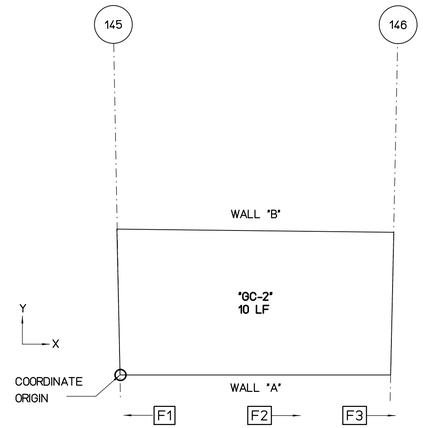


## FLOOR PLAN VIEW

SCALE : 3/16" = 1'-0"

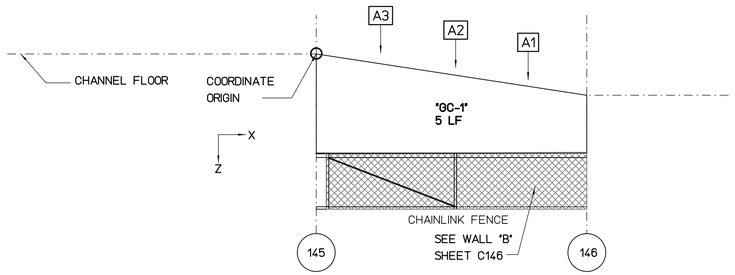


## WALL "A" FLATTEN VIEW

SCALE : 3/16" = 1'-0"

REPAIR LEGEND AND NOTES:

- 2 — CRACK AND SPALL REPAIR TYPES, SEE SHEETS SR201 AND SR202 FOR DETAILS. TYPE [*] INDICATES NO-REPAIR
- (A) — CHAINLINK FENCE REPAIR TYPES, SEE SHEETS SF201 AND SF202 FOR DETAILS
- 1.0 — TOP OF WALL LEANING DISTANCE TOWARD CHANNEL IN INCHES, SEE SHEETS SL101 TO SL207 FOR CONCRETE LINING

PHOTO LEGEND:

- A1 — WALL "A" ELEVATION PHOTO IDENTIFICATION SEE FLATTEN VIEW FOR PHOTO LOCATION
- B1 — WALL "B" ELEVATION PHOTO IDENTIFICATION SEE FLATTEN VIEW FOR PHOTO LOCATION
- F1 — CHANNEL FLOOR PHOTO IDENTIFICATION SEE FLOOR PLAN VIEW FOR PHOTO LOCATION

B1



B2



B3



F1



F2



F3



A1



A2



A3



### SPALL REPAIR CHART

| MARK | LOCATION | REPAIR TYPE | SPALL DIMENSION L | SPALL DIMENSION W | SPALL DIMENSION D | SPALL VOLUME | SPALL CENTER COORDINATE X | SPALL CENTER COORDINATE Y OR Z | RATING |
|---|---|---|---|---|---|---|---|---|---|
| "SP-1" | WALL "B" | 3 | 36 | 36 | 2 | 2592 | 13 | 1.5 | 7 |
| "SP-2" | WALL "B" | 3 | 24 | 16 | 2 | 768 | 15 | 4.5 | 7 |
| "SP-3" | WALL "B" | 3 | 19 | 16 | 3 | 912 | 21 | 3 | 7 |

### CHAINLINK FENCE REPAIR CHART

| MARK | LOCATION | REPAIR TYPE | POSTS | TOP RAIL | BOTTOM WIRE | BRACE | FABRIC |
|---|---|---|---|---|---|---|---|
| "CF-1" | WALL "B" | (E) | - | - | - | - | DAMAGED 10'x4' |
| "CF-2" | WALL "B" | (C) | - | DAMAGED 20' | - | - | - |
| "CF-3" | WALL "B" | (D) | - | - | DAMAGED 20' | - | - |

### CRACK REPAIR CHART

| MARK | LOCATION | REPAIR TYPE | GENERAL CRACKS (LF) | MAJOR CRACKS WIDTH (IN) | MAJOR CRACKS LENGTH (FT) | MAJOR CRACKS START PNT X | MAJOR CRACKS START PNT Y,Z | MAJOR CRACKS END PNT X | MAJOR CRACKS END PNT Y,Z | RATING |
|---|---|---|---|---|---|---|---|---|---|---|
| "GC-1" | WALL "A" | * | 5 | - | - | - | - | - | - | 9 |
| "GC-2" | FLOOR | * | 10 | - | - | - | - | - | - | 8 |
| "GC-3" | WALL "B" | * | 5 | - | - | - | - | - | - | 9 |

GRAPHIC SCALES:

0 1' 2' 4' 8' 12' 16'

3/16"=1'-0"

| REVISION NO. | DATE | REVISIONS | BY |
|---|---|---|---|

ARTHER R DAR
LICENSED PROFESSIONAL ENGINEER
No. 7808-S
HAWAII U.S.A.

Exp. Date: 4-30-20

THIS WORK WAS PREPARED BY ME OR UNDER MY SUPERVISION AND CONSTRUCTION OF THIS PROJECT WILL BE UNDER MY OBSERVATION

DEPARTMENT OF HAWAIIAN HOMELAND

# NANAKULI FLOOD CONTROL CHANNEL IMPROVEMENTS NANAKULI VALLEY, OAHU HAWAII

## CHANNEL SEGMENT 146R REPAIR DETAILS

| | |
|---|---|
| DESIGNED BY: | TTP |
| DRAWN BY: | AK, AP, DL |
| CHECKED BY: | AD |
| SUPV: | |
| DATE: | 03/05/2019 |

HAWAII ENGINEERING GROUP, Inc.
Civil & Structural Engineers
1088 BISHOP STREET #2506
HONOLULU, HI 96813
Tel: 808-533-2092

JOB NO.

SHEET C146R

156 OF 225 SHTS

FILE ___ DRAWER ___ ___ FOLDER ___ ___

Plot date: 15-Apr-2020
Full Size Plot

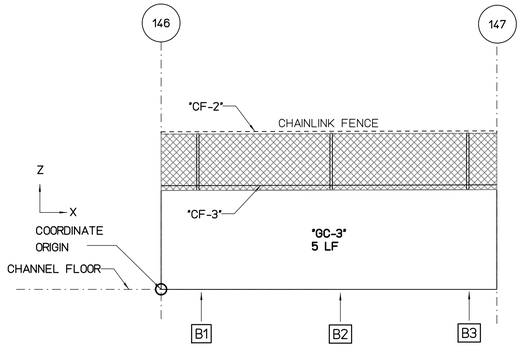


## WALL "B" FLATTEN VIEW

SCALE : 3/16" = 1'-0"

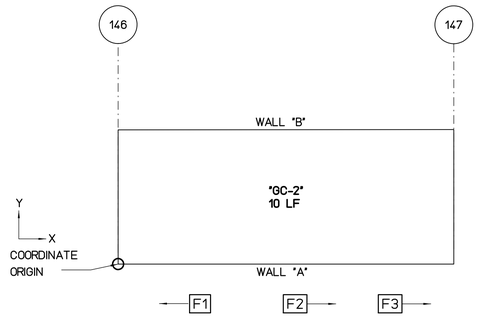


## FLOOR PLAN VIEW

SCALE : 3/16" = 1'-0"

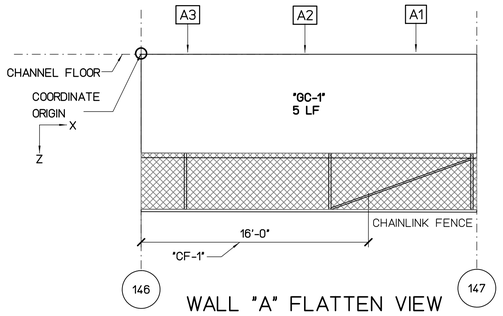


## WALL "A" FLATTEN VIEW

SCALE : 3/16" = 1'-0"

REPAIR LEGEND AND NOTES:

- 2 — CRACK AND SPALL REPAIR TYPES, SEE SHEETS SR201 AND SR202 FOR DETAILS. TYPE [*] INDICATES NO-REPAIR
- (A) — CHAINLINK FENCE REPAIR TYPES, SEE SHEETS SF201 AND SF202 FOR DETAILS
- 1.0 — TOP OF WALL LEANING DISTANCE TOWARD CHANNEL IN INCHES, SEE SHEETS SL101 TO SL207 FOR CONCRETE LINING

PHOTO LEGEND:

- A1 — WALL "A" ELEVATION PHOTO IDENTIFICATION SEE FLATTEN VIEW FOR PHOTO LOCATION
- B1 — WALL "B" ELEVATION PHOTO IDENTIFICATION SEE FLATTEN VIEW FOR PHOTO LOCATION
- F1 — CHANNEL FLOOR PHOTO IDENTIFICATION SEE FLOOR PLAN VIEW FOR PHOTO LOCATION

B1



B2



B3



F1



F2

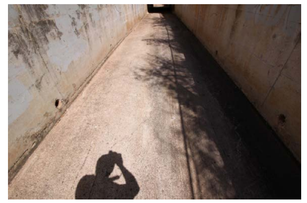

F3



A1



A2



A3



### SPALL REPAIR CHART

| MARK | LOCATION | REPAIR TYPE | SPALL DIMENSION | | | SPALL VOLUME | SPALL CENTER COORDINATE | | RATING |
|---|---|---|---|---|---|---|---|---|---|
| | | | L | W | D | | X | Y OR Z | |
| | | | | | | | | | |
| | | | | | | | | | |
| | | | | | | | | | |
| | | | | | | | | | |
| | | | | | | | | | |
| | | | | | | | | | |
| | | | | | | | | | |
| | | | | | | | | | |

### CHAINLINK FENCE REPAIR CHART

| MARK | LOCATION | REPAIR TYPE | POSTS | TOP RAIL | BOTTOM WIRE | BRACE | FABRIC |
|---|---|---|---|---|---|---|---|
| "CF-1" | WALL "A" | (E) | - | - | - | - | DAMAGED 16'x4' |
| "CF-2" | WALL "B" | (C) | - | MISSING 24' | - | - | - |
| "CF-3" | WALL "B" | (D) | - | - | DAMAGED 24' | - | - |
| | | | | | | | |
| | | | | | | | |
| | | | | | | | |
| | | | | | | | |
| | | | | | | | |
| | | | | | | | |
| | | | | | | | |

### CRACK REPAIR CHART

| MARK | LOCATION | REPAIR TYPE | GENERAL CRACKS (LF) | MAJOR CRACKS | | | | | | RATING |
|---|---|---|---|---|---|---|---|---|---|---|
| | | | | WIDTH (IN) | LENGTH (FT) | START PNT X | START PNT Y,Z | END PNT X | END PNT Y,Z | |
| "GC-1" | WALL "A" | [*] | 5 | - | - | - | - | - | - | 9 |
| "GC-2" | FLOOR | [*] | 10 | - | - | - | - | - | - | 8 |
| "GC-3" | WALL "B" | [*] | 5 | - | - | - | - | - | - | 9 |
| | | | | | | | | | | |
| | | | | | | | | | | |
| | | | | | | | | | | |
| | | | | | | | | | | |

GRAPHIC SCALES:

0 1' 2' 4' 8' 12' 16'

3/16"=1'-0"

| REVISION NO. | DATE | REVISIONS | BY |
|---|---|---|---|
| | | | |

ARTHER R. DAR
LICENSED PROFESSIONAL ENGINEER
No. 7808-S
HAWAII U.S.A.

Exp. Date: 4-30-20

THIS WORK WAS PREPARED BY ME OR UNDER MY SUPERVISION AND CONSTRUCTION OF THIS PROJECT WILL BE UNDER MY OBSERVATION

DEPARTMENT OF HAWAIIAN HOMELAND

# NANAKULI FLOOD CONTROL CHANNEL IMPROVEMENTS NANAKULI VALLEY, OAHU HAWAII

## CHANNEL SEGMENT 147 REPAIR DETAILS

| | |
|---|---|
| DESIGNED BY: | TTP |
| DRAWN BY: | AK, AP, DL |
| CHECKED BY: | AD |
| SUPV: | |
| DATE: | 03/05/2019 |

HAWAII ENGINEERING GROUP, Inc.
Civil & Structural Engineers
1088 BISHOP STREET #2506
HONOLULU, HI 96813
Tel: 808-533-2092

JOB NO.

SHEET C147

157 OF 225 SHTS

FILE ___ DRAWER ___ ___ FOLDER ___ ___

Plot date: 15-Apr-2020
Full Size Plot

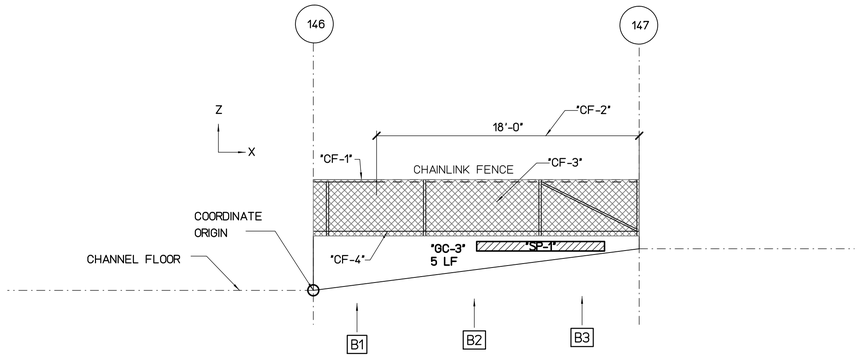


## WALL "B" FLATTEN VIEW

SCALE : 3/16" = 1'-0"

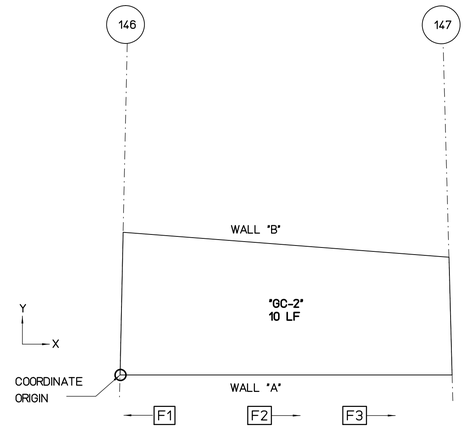


## FLOOR PLAN VIEW

SCALE : 3/16" = 1'-0"

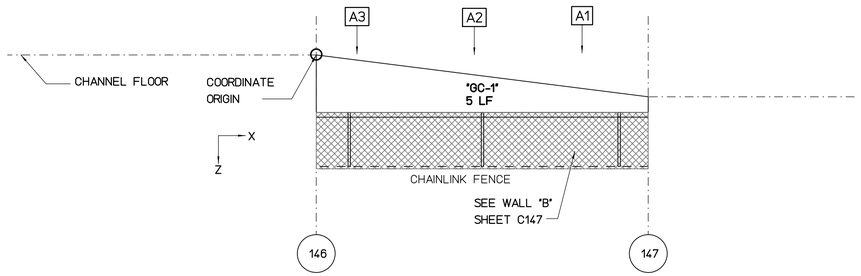


## WALL "A" FLATTEN VIEW

SCALE : 3/16" = 1'-0"

REPAIR LEGEND AND NOTES:

- [2] CRACK AND SPALL REPAIR TYPES, SEE SHEETS SR201 AND SR202 FOR DETAILS. TYPE [*] INDICATES NO-REPAIR
- (A) CHAINLINK FENCE REPAIR TYPES, SEE SHEETS SF201 AND SF202 FOR DETAILS
- 1.0 TOP OF WALL LEANING DISTANCE TOWARD CHANNEL IN INCHES, SEE SHEETS SL101 TO SL207 FOR CONCRETE LINING

PHOTO LEGEND:

- A1 WALL "A" ELEVATION PHOTO IDENTIFICATION SEE FLATTEN VIEW FOR PHOTO LOCATION
- B1 WALL "B" ELEVATION PHOTO IDENTIFICATION SEE FLATTEN VIEW FOR PHOTO LOCATION
- F1 CHANNEL FLOOR PHOTO IDENTIFICATION SEE FLOOR PLAN VIEW FOR PHOTO LOCATION

B1



B2



B3



F1



F2



F3



A1



A2



A3



### SPALL REPAIR CHART

| MARK | LOCATION | REPAIR TYPE | SPALL DIMENSION L | SPALL DIMENSION W | SPALL DIMENSION D | SPALL VOLUME | SPALL CENTER COORDINATE X | SPALL CENTER COORDINATE Y OR Z | RATING |
|---|---|---|---|---|---|---|---|---|---|
| "SP-1" | WALL "B" | [3] | 108 | 8 | 4 | 3456 | 16 | 0.5 | 6 |

### CHAINLINK FENCE REPAIR CHART

| MARK | LOCATION | REPAIR TYPE | POSTS | TOP RAIL | BOTTOM WIRE | BRACE | FABRIC |
|---|---|---|---|---|---|---|---|
| "CF-1" | WALL "B" | (C) | - | DAMAGED 5' | - | - | - |
| "CF-2" | WALL "B" | (C) | - | MISSING 18' | - | - | - |
| "CF-3" | WALL "B" | (E) | - | - | - | - | DAMAGED 23'x4' |
| "CF-4" | WALL "B" | (D) | - | - | DAMAGED 23' | - | - |

### CRACK REPAIR CHART

| MARK | LOCATION | REPAIR TYPE | GENERAL CRACKS (LF) | MAJOR CRACKS WIDTH (IN) | MAJOR CRACKS LENGTH (FT) | MAJOR CRACKS START PNT X | MAJOR CRACKS START PNT Y,Z | MAJOR CRACKS END PNT X | MAJOR CRACKS END PNT Y,Z | RATING |
|---|---|---|---|---|---|---|---|---|---|---|
| "GC-1" | WALL "A" | [*] | 5 | - | - | - | - | - | - | 9 |
| "GC-2" | FLOOR | [*] | 10 | - | - | - | - | - | - | 8 |
| "GC-3" | WALL "B" | [*] | 5 | - | - | - | - | - | - | 9 |

GRAPHIC SCALES:

0 1' 2' 4' 8' 12' 16'

3/16"=1'-0"

| REVISION NO. | DATE | REVISIONS | BY |
|---|---|---|---|

ARTHER R DAR
LICENSED PROFESSIONAL ENGINEER
No. 7808-S
HAWAII U.S.A.

Exp. Date: 4-30-20

THIS WORK WAS PREPARED BY ME OR UNDER MY SUPERVISION AND CONSTRUCTION OF THIS PROJECT WILL BE UNDER MY OBSERVATION

DEPARTMENT OF HAWAIIAN HOMELAND

# NANAKULI FLOOD CONTROL CHANNEL IMPROVEMENTS NANAKULI VALLEY, OAHU HAWAII

## CHANNEL SEGMENT [147R] REPAIR DETAILS

| | |
|---|---|
| DESIGNED BY: | TTP |
| DRAWN BY: | AK, AP, DL |
| CHECKED BY: | AD |
| SUPV: | |
| DATE: | 03/05/2019 |

HAWAII ENGINEERING GROUP, Inc.
Civil & Structural Engineers
1088 BISHOP STREET #2506
HONOLULU, HI 96813
Tel: 808-533-2092

JOB NO.

SHEET C147R
158OF 225 SHTS

FILE ___ DRAWER ___ ___ FOLDER ___ ___

Plot date: 15-Apr-2020
Full Size Plot

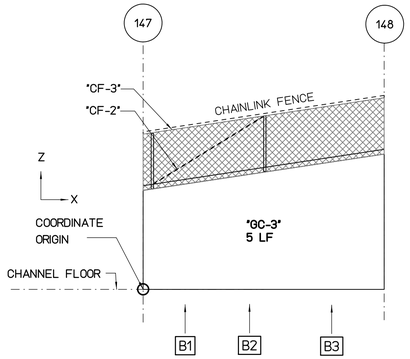


## WALL "B" FLATTEN VIEW

SCALE : 3/16" = 1'-0"

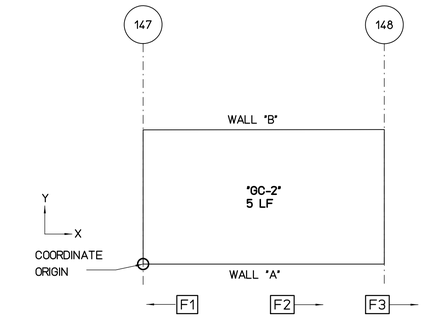


## FLOOR PLAN VIEW

SCALE : 3/16" = 1'-0"

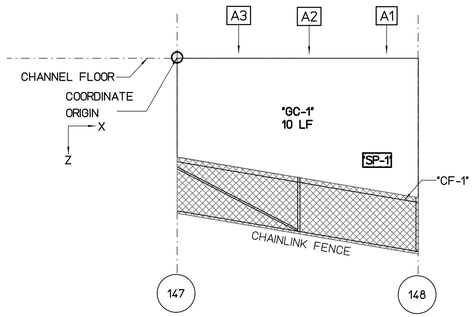


## WALL "A" FLATTEN VIEW

SCALE : 3/16" = 1'-0"

REPAIR LEGEND AND NOTES:

- 2 — CRACK AND SPALL REPAIR TYPES, SEE SHEETS SR201 AND SR202 FOR DETAILS. TYPE * INDICATES NO-REPAIR
- (A) — CHAINLINK FENCE REPAIR TYPES, SEE SHEETS SF201 AND SF202 FOR DETAILS
- 1.0 — TOP OF WALL LEANING DISTANCE TOWARD CHANNEL IN INCHES, SEE SHEETS SL101 TO SL207 FOR CONCRETE LINING

PHOTO LEGEND:

- A1 — WALL "A" ELEVATION PHOTO IDENTIFICATION SEE FLATTEN VIEW FOR PHOTO LOCATION
- B1 — WALL "B" ELEVATION PHOTO IDENTIFICATION SEE FLATTEN VIEW FOR PHOTO LOCATION
- F1 — CHANNEL FLOOR PHOTO IDENTIFICATION SEE FLOOR PLAN VIEW FOR PHOTO LOCATION

B1



B2



B3



F1



F2



F3



A1



A2



A3



### SPALL REPAIR CHART

| MARK | LOCATION | REPAIR TYPE | SPALL DIMENSION L | SPALL DIMENSION W | SPALL DIMENSION D | SPALL VOLUME | SPALL CENTER COORDINATE X | SPALL CENTER COORDINATE Y OR Z | RATING |
|---|---|---|---|---|---|---|---|---|---|
| "SP-1" | WALL "A" | 3 | 24 | 12 | 2 | 576 | 14 | 7 | 7 |

### CHAINLINK FENCE REPAIR CHART

| MARK | LOCATION | REPAIR TYPE | POSTS | TOP RAIL | BOTTOM WIRE | BRACE | FABRIC |
|---|---|---|---|---|---|---|---|
| "CF-1" | WALL "A" | (D) | - | - | DAMAGE 17' | - | - |
| "CF-2" | WALL "B" | (B) | - | - | - | MISSING 1 | - |
| "CF-3" | WALL "B" | (C) | - | MISSING 17' | - | - | - |

### CRACK REPAIR CHART

| MARK | LOCATION | REPAIR TYPE | GENERAL CRACKS (LF) | MAJOR CRACKS WIDTH (IN) | MAJOR CRACKS LENGTH (FT) | MAJOR CRACKS START PNT X | MAJOR CRACKS START PNT Y,Z | MAJOR CRACKS END PNT X | MAJOR CRACKS END PNT Y,Z | RATING |
|---|---|---|---|---|---|---|---|---|---|---|
| "GC-1" | WALL "A" | * | 10 | - | - | - | - | - | - | 8 |
| "GC-2" | FLOOR | * | 5 | - | - | - | - | - | - | 9 |
| "GC-3" | WALL "B" | * | 5 | - | - | - | - | - | - | 9 |

GRAPHIC SCALES:

0 1' 2' 4' 8' 12' 16'

3/16"=1'-0"

| REVISION NO. | DATE | REVISIONS | BY |
|---|---|---|---|

ATHER R. DAR
LICENSED PROFESSIONAL ENGINEER
No. 7808-S
HAWAII U.S.A.
Exp. Date: 4-30-20

THIS WORK WAS PREPARED BY ME OR UNDER MY SUPERVISION AND CONSTRUCTION OF THIS PROJECT WILL BE UNDER MY OBSERVATION

DEPARTMENT OF HAWAIIAN HOMELAND

# NANAKULI FLOOD CONTROL CHANNEL IMPROVEMENTS NANAKULI VALLEY, OAHU HAWAII

## CHANNEL SEGMENT 148 REPAIR DETAILS

DESIGNED BY: TTP
DRAWN BY: AK, AP, DL
CHECKED BY: AD
SUPV:
DATE: 03/05/2019

HAWAII ENGINEERING GROUP, Inc.
Civil & Structural Engineers
1088 BISHOP STREET #2506
HONOLULU, HI 96813
Tel: 808-533-2092

JOB NO.

SHEET C148
159 OF 225 SHTS

FILE ___ DRAWER ___ ___ ___ FOLDER ___ ___

Plot date: 15-Apr-2020
Full Size Plot

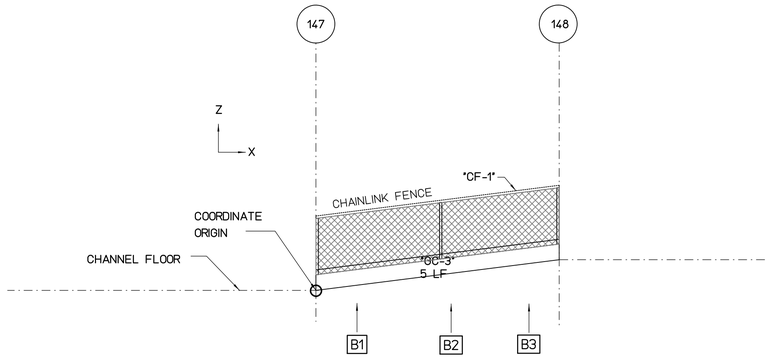


## WALL "B" FLATTEN VIEW

SCALE : 3/16" = 1'-0"

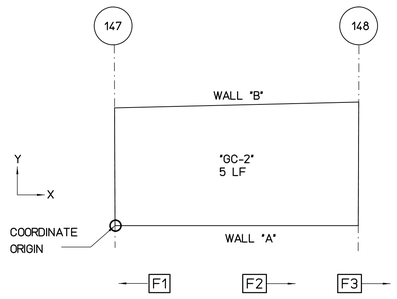


## FLOOR PLAN VIEW

SCALE : 3/16" = 1'-0"

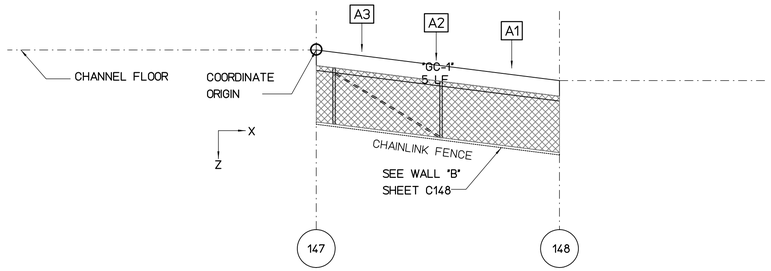


## WALL "A" FLATTEN VIEW

SCALE : 3/16" = 1'-0"

REPAIR LEGEND AND NOTES:

- 2 — CRACK AND SPALL REPAIR TYPES, SEE SHEETS SR201 AND SR202 FOR DETAILS. TYPE [*] INDICATES NO-REPAIR
- (A) — CHAINLINK FENCE REPAIR TYPES, SEE SHEETS SF201 AND SF202 FOR DETAILS
- 1.0 — TOP OF WALL LEANING DISTANCE TOWARD CHANNEL IN INCHES, SEE SHEETS SL101 TO SL207 FOR CONCRETE LINING

PHOTO LEGEND:

- A1 — WALL "A" ELEVATION PHOTO IDENTIFICATION SEE FLATTEN VIEW FOR PHOTO LOCATION
- B1 — WALL "B" ELEVATION PHOTO IDENTIFICATION SEE FLATTEN VIEW FOR PHOTO LOCATION
- F1 — CHANNEL FLOOR PHOTO IDENTIFICATION SEE FLOOR PLAN VIEW FOR PHOTO LOCATION

B1



B2



B3



F1



F2



F3



A1



A2



A3



### SPALL REPAIR CHART

| MARK | LOCATION | REPAIR TYPE | SPALL DIMENSION | | | SPALL VOLUME | SPALL CENTER COORDINATE | | RATING |
|---|---|---|---|---|---|---|---|---|---|
| | | | L | W | D | | X | Y OR Z | |
| | | | | | | | | | |
| | | | | | | | | | |
| | | | | | | | | | |
| | | | | | | | | | |
| | | | | | | | | | |
| | | | | | | | | | |
| | | | | | | | | | |
| | | | | | | | | | |

### CHAINLINK FENCE REPAIR CHART

| MARK | LOCATION | REPAIR TYPE | POSTS | TOP RAIL | BOTTOM WIRE | BRACE | FABRIC |
|---|---|---|---|---|---|---|---|
| "CF-1" | WALL "B" | (C) | - | MISSING 17' | - | - | - |
| | | | | | | | |
| | | | | | | | |
| | | | | | | | |
| | | | | | | | |
| | | | | | | | |
| | | | | | | | |
| | | | | | | | |
| | | | | | | | |

### CRACK REPAIR CHART

| MARK | LOCATION | REPAIR TYPE | GENERAL CRACKS (LF) | MAJOR CRACKS | | | | | | | RATING |
|---|---|---|---|---|---|---|---|---|---|---|---|
| | | | | WIDTH (IN) | LENGTH (FT) | START PNT | | END PNT | | |
| | | | | | | X | Y,Z | X | Y,Z | |
| "GC-1" | WALL "A" | [*] | 5 | - | - | - | - | - | - | 9 |
| "GC-2" | FLOOR | [*] | 5 | - | - | - | - | - | - | 9 |
| "GC-3" | WALL "B" | [*] | 5 | - | - | - | - | - | - | 9 |
| | | | | | | | | | | |
| | | | | | | | | | | |
| | | | | | | | | | | |
| | | | | | | | | | | |

GRAPHIC SCALES:

0 1' 2' 4' 8' 12' 16'

3/16"=1'-0"

| REVISION NO. | DATE | REVISIONS | BY |
|---|---|---|---|
| | | | |

ARTHER R DAR
LICENSED PROFESSIONAL ENGINEER
No. 7808-S
HAWAII U.S.A.

Exp. Date: 4-30-20

THIS WORK WAS PREPARED BY ME OR UNDER MY SUPERVISION AND CONSTRUCTION OF THIS PROJECT WILL BE UNDER MY OBSERVATION

DEPARTMENT OF HAWAIIAN HOMELAND

# NANAKULI FLOOD CONTROL CHANNEL IMPROVEMENTS NANAKULI VALLEY, OAHU HAWAII

## CHANNEL SEGMENT 148R REPAIR DETAILS

| | |
|---|---|
| DESIGNED BY: | TTP |
| DRAWN BY: | AK, AP, DL |
| CHECKED BY: | AD |
| SUPV: | |
| DATE: | 03/05/2019 |

HAWAII ENGINEERING GROUP, Inc.
Civil & Structural Engineers
1088 BISHOP STREET #2506
HONOLULU, HI 96813
Tel: 808-533-2092

JOB NO.

SHEET C148R

160OF 225 SHTS

FILE ___ DRAWER ___ ___ FOLDER ___ ___

Plot date: 15-Apr-2020
Full Size Plot

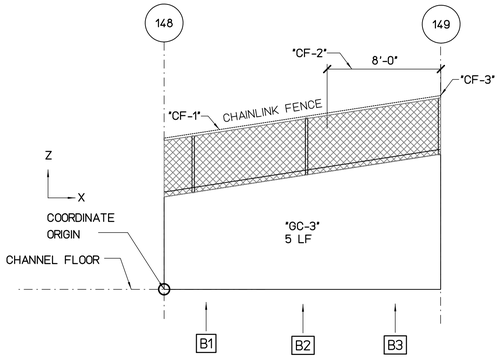


## WALL "B" FLATTEN VIEW

SCALE : 3/16" = 1'-0"

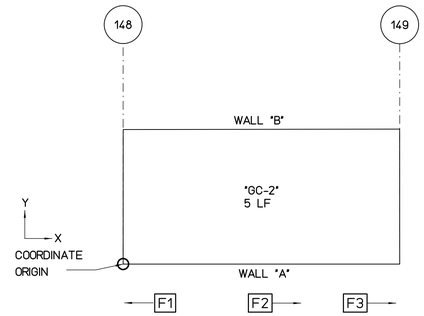


## FLOOR PLAN VIEW

SCALE : 3/16" = 1'-0"

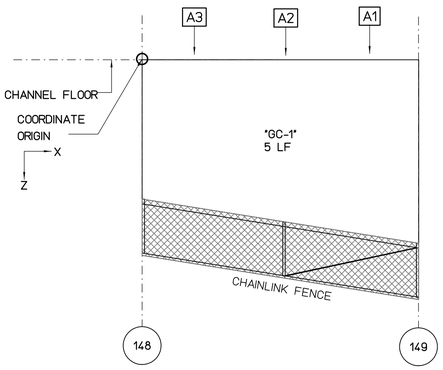


## WALL "A" FLATTEN VIEW

SCALE : 3/16" = 1'-0"

REPAIR LEGEND AND NOTES:

- [2] CRACK AND SPALL REPAIR TYPES, SEE SHEETS SR201 AND SR202 FOR DETAILS. TYPE [*] INDICATES NO-REPAIR
- (A) CHAINLINK FENCE REPAIR TYPES, SEE SHEETS SF201 AND SF202 FOR DETAILS
- [1.0] TOP OF WALL LEANING DISTANCE TOWARD CHANNEL IN INCHES, SEE SHEETS SL101 TO SL207 FOR CONCRETE LINING

PHOTO LEGEND:

- [A1] WALL "A" ELEVATION PHOTO IDENTIFICATION SEE FLATTEN VIEW FOR PHOTO LOCATION
- [B1] WALL "B" ELEVATION PHOTO IDENTIFICATION SEE FLATTEN VIEW FOR PHOTO LOCATION
- [F1] CHANNEL FLOOR PHOTO IDENTIFICATION SEE FLOOR PLAN VIEW FOR PHOTO LOCATION

B1



B2



B3



F1



F2



F3

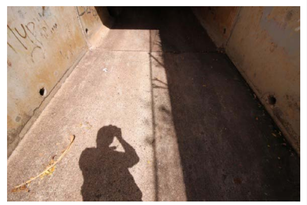

A1



A2



A3



### SPALL REPAIR CHART

| MARK | LOCATION | REPAIR TYPE | SPALL DIMENSION | | | SPALL VOLUME | SPALL CENTER COORDINATE | | RATING |
|---|---|---|---|---|---|---|---|---|---|
| | | | L | W | D | | X | Y OR Z | |
| | | | | | | | | | |
| | | | | | | | | | |
| | | | | | | | | | |
| | | | | | | | | | |
| | | | | | | | | | |
| | | | | | | | | | |
| | | | | | | | | | |

### CHAINLINK FENCE REPAIR CHART

| MARK | LOCATION | REPAIR TYPE | POSTS | TOP RAIL | BOTTOM WIRE | BRACE | FABRIC |
|---|---|---|---|---|---|---|---|
| "CF-1" | WALL "B" | (C) | - | MISSING 20' | - | - | - |
| "CF-2" | WALL "B" | (E) | - | - | - | - | DAMAGED 8'x4' |
| "CF-3" | WALL "B" | (A) | BENT 1 | - | - | - | - |
| | | | | | | | |
| | | | | | | | |
| | | | | | | | |
| | | | | | | | |
| | | | | | | | |
| | | | | | | | |
| | | | | | | | |

### CRACK REPAIR CHART

| MARK | LOCATION | REPAIR TYPE | GENERAL CRACKS (LF) | MAJOR CRACKS | | | | | | RATING |
|---|---|---|---|---|---|---|---|---|---|---|
| | | | | WIDTH (IN) | LENGTH (FT) | START PNT X | START PNT Y,Z | END PNT X | END PNT Y,Z | |
| "GC-1" | WALL "A" | [*] | 5 | - | - | - | - | - | - | 9 |
| "GC-2" | FLOOR | [*] | 5 | - | - | - | - | - | - | 9 |
| "GC-3" | WALL "B" | [*] | 5 | - | - | - | - | - | - | 9 |
| | | | | | | | | | | |
| | | | | | | | | | | |
| | | | | | | | | | | |
| | | | | | | | | | | |

GRAPHIC SCALES:

0 1' 2' 4' 8' 12' 16'

3/16"=1'-0"

| REVISION NO. | DATE | REVISIONS | BY |
|---|---|---|---|
| | | | |

ATHER R. DAR
LICENSED PROFESSIONAL ENGINEER
No. 7808-S
HAWAII U.S.A.

Exp. Date: 4-30-20

THIS WORK WAS PREPARED BY ME OR UNDER MY SUPERVISION AND CONSTRUCTION OF THIS PROJECT WILL BE UNDER MY OBSERVATION

DEPARTMENT OF HAWAIIAN HOMELAND

# NANAKULI FLOOD CONTROL CHANNEL IMPROVEMENTS NANAKULI VALLEY, OAHU HAWAII

## CHANNEL SEGMENT [149] REPAIR DETAILS

| | |
|---|---|
| DESIGNED BY: | TTP |
| DRAWN BY: | AK, AP, DL |
| CHECKED BY: | AD |
| SUPV: | |
| DATE: | 03/05/2019 |

HAWAII ENGINEERING GROUP, Inc.
Civil & Structural Engineers
1088 BISHOP STREET #2506
HONOLULU, HI 96813
Tel: 808-533-2092

JOB NO.

SHEET C149
161 OF 225 SHTS

FILE ___ DRAWER ___ ___ FOLDER ___ ___

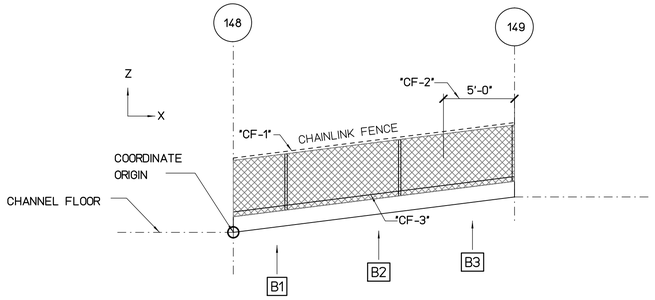


## WALL "B" FLATTEN VIEW

SCALE : 3/16" = 1'-0"

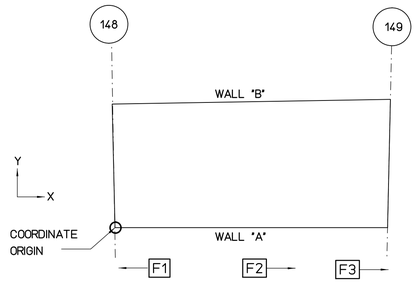


## FLOOR PLAN VIEW

SCALE : 3/16" = 1'-0"

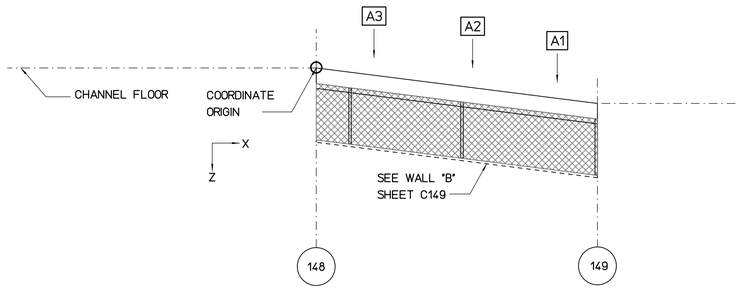


## WALL "A" FLATTEN VIEW

SCALE : 3/16" = 1'-0"

NOTE:

FOR CATTLE GATE PLAN AND DETAILS, SEE SHEET SF203.

REPAIR LEGEND AND NOTES:

- [2] CRACK AND SPALL REPAIR TYPES, SEE SHEETS SR201 AND SR202 FOR DETAILS. TYPE [*] INDICATES NO-REPAIR
- (A) CHAINLINK FENCE REPAIR TYPES, SEE SHEETS SF201 AND SF202 FOR DETAILS
- [1.0] TOP OF WALL LEANING DISTANCE TOWARD CHANNEL IN INCHES, SEE SHEETS SL101 TO SL207 FOR CONCRETE LINING

PHOTO LEGEND:

- [A1] WALL "A" ELEVATION PHOTO IDENTIFICATION SEE FLATTEN VIEW FOR PHOTO LOCATION
- [B1] WALL "B" ELEVATION PHOTO IDENTIFICATION SEE FLATTEN VIEW FOR PHOTO LOCATION
- [F1] CHANNEL FLOOR PHOTO IDENTIFICATION SEE FLOOR PLAN VIEW FOR PHOTO LOCATION

B1



B2



B3



F1



F2



F3



A1



A2



A3



### SPALL REPAIR CHART

| MARK | LOCATION | REPAIR TYPE | SPALL DIMENSION | | | SPALL VOLUME | SPALL CENTER COORDINATE | | RATING |
|---|---|---|---|---|---|---|---|---|---|
| | | | H | W | D | | X | Y OR Z | |
| | | | | | | | | | |
| | | | | | | | | | |
| | | | | | | | | | |
| | | | | | | | | | |
| | | | | | | | | | |
| | | | | | | | | | |
| | | | | | | | | | |

### CHAINLINK FENCE REPAIR CHART

| MARK | LOCATION | REPAIR TYPE | POSTS | TOP RAIL | BOTTOM WIRE | BRACE | FABRIC |
|---|---|---|---|---|---|---|---|
| "CF-1" | WALL "B" | (C) | - | MISSING 20' | - | - | - |
| "CF-2" | WALL "B" | (E) | - | - | - | - | DAMAGED 5'x4' |
| "CF-3" | WALL "B" | (D) | - | - | DAMAGED 20' | - | - |
| | | | | | | | |
| | | | | | | | |
| | | | | | | | |
| | | | | | | | |
| | | | | | | | |
| | | | | | | | |
| | | | | | | | |

### CRACK REPAIR CHART

| MARK | LOCATION | REPAIR TYPE | GENERAL CRACKS (LF) | MAJOR CRACKS | | | | | | RATING |
|---|---|---|---|---|---|---|---|---|---|---|
| | | | | WIDTH (IN) | LENGTH (FT) | START PNT | | END PNT | | |
| | | | | | | X | Y,Z | X | Y,Z | |
| | | | | | | | | | | |
| | | | | | | | | | | |
| | | | | | | | | | | |
| | | | | | | | | | | |
| | | | | | | | | | | |
| | | | | | | | | | | |
| | | | | | | | | | | |

GRAPHIC SCALES:

0 1' 2' 4' 8' 12' 16'

3/16"=1'-0"

| REVISION NO. | DATE | REVISIONS | BY |
|---|---|---|---|
| | | | |

ATHER R. DAR
LICENSED PROFESSIONAL ENGINEER
No. 7808-S
HAWAII U.S.A.

Exp. Date: 4-30-20

THIS WORK WAS PREPARED BY ME OR UNDER MY SUPERVISION AND CONSTRUCTION OF THIS PROJECT WILL BE UNDER MY OBSERVATION

DEPARTMENT OF HAWAIIAN HOMELAND

NANAKULI FLOOD CONTROL
CHANNEL IMPROVEMENTS
NANAKULI VALLEY, OAHU HAWAII

CHANNEL SEGMENT [149R] REPAIR DETAILS

| | |
|---|---|
| DESIGNED BY: | TTP |
| DRAWN BY: | AK, AP, DL |
| CHECKED BY: | AD |
| SUPV: | |
| DATE: | 03/05/2019 |

HAWAII ENGINEERING GROUP, Inc.
Civil & Structural Engineers
1088 BISHOP STREET #2506
HONOLULU, HI 96813
Tel: 808-533-2092

JOB NO.

SHEET C149R

162 OF 225 SHTS

FILE __ DRAWER __ FOLDER __

Plot date: 15-Apr-2020

Full Size Plot

Plot date: 15-Apr-2020
Full Size Plot

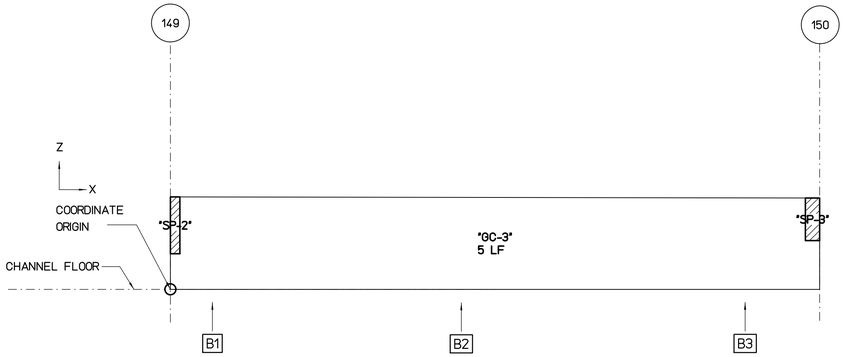


## WALL "B" FLATTEN VIEW (NIC)

SCALE : 3/16" = 1'-0"

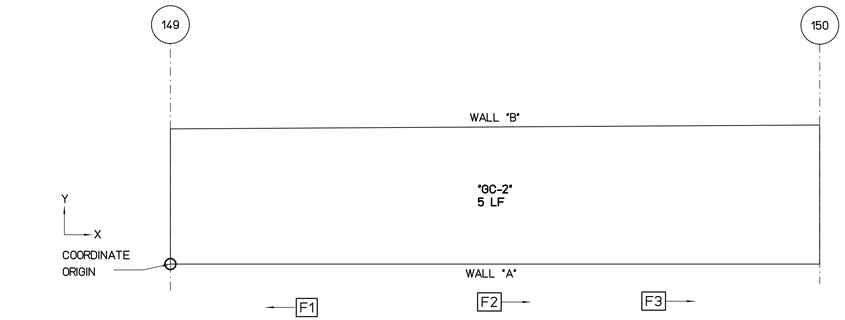


## FLOOR PLAN VIEW

SCALE : 3/16" = 1'-0"

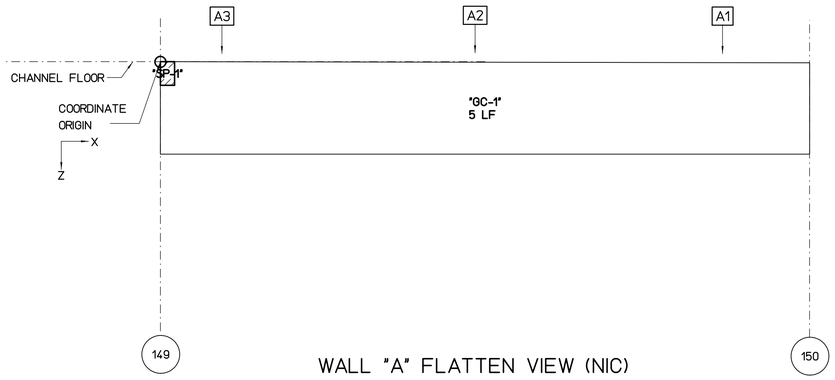


## WALL "A" FLATTEN VIEW (NIC)

SCALE : 3/16" = 1'-0"

REPAIR LEGEND AND NOTES:

- 2 — CRACK AND SPALL REPAIR TYPES, SEE SHEETS SR201 AND SR202 FOR DETAILS. TYPE * INDICATES NO-REPAIR
- A — CHAINLINK FENCE REPAIR TYPES, SEE SHEETS SF201 AND SF202 FOR DETAILS
- 1.0 — TOP OF WALL LEANING DISTANCE TOWARD CHANNEL IN INCHES, SEE SHEETS SL101 TO SL207 FOR CONCRETE LINING

PHOTO LEGEND:

- A1 — WALL "A" ELEVATION PHOTO IDENTIFICATION SEE FLATTEN VIEW FOR PHOTO LOCATION
- B1 — WALL "B" ELEVATION PHOTO IDENTIFICATION SEE FLATTEN VIEW FOR PHOTO LOCATION
- F1 — CHANNEL FLOOR PHOTO IDENTIFICATION SEE FLOOR PLAN VIEW FOR PHOTO LOCATION

B1



B2



B3



F1



F2



F3



A1



A2




A3



### SPALL REPAIR CHART

| MARK | LOCATION | REPAIR TYPE | SPALL DIMENSION L | SPALL DIMENSION W | SPALL DIMENSION D | SPALL VOLUME | SPALL CENTER COORDINATE X | SPALL CENTER COORDINATE Y OR Z | RATING |
|---|---|---|---|---|---|---|---|---|---|
| "SP-1" | WALL "A" | 3 | 12 | 20 | 3 | 720 | 0 | 1 | 7 |
| "SP-2" | WALL "B" | 3 | 8 | 48 | 2 | 768 | 0 | 4 | 7 |
| "SP-3" | WALL "B" | 3 | 12 | 36 | 2 | 864 | 45 | 5 | 7 |

### CHAINLINK FENCE REPAIR CHART

| MARK | LOCATION | REPAIR TYPE | POSTS | TOP RAIL | BOTTOM WIRE | BRACE | FABRIC |
|---|---|---|---|---|---|---|---|

### CRACK REPAIR CHART

| MARK | LOCATION | REPAIR TYPE | GENERAL CRACKS (LF) | MAJOR CRACKS WIDTH (IN) | MAJOR CRACKS LENGTH (FT) | MAJOR CRACKS START PNT X | MAJOR CRACKS START PNT Y,Z | MAJOR CRACKS END PNT X | MAJOR CRACKS END PNT Y,Z | RATING |
|---|---|---|---|---|---|---|---|---|---|---|
| "GC-1" | WALL "A" | * | 5 | - | - | - | - | - | - | 9 |
| "GC-2" | FLOOR | * | 5 | - | - | - | - | - | - | 9 |
| "GC-3" | WALL "B" | * | 5 | - | - | - | - | - | - | 9 |

GRAPHIC SCALES:

0 1' 2' 4' 8' 12' 16'

3/16"=1'-0"

| REVISION NO. | DATE | REVISIONS | BY |
|---|---|---|---|

ATHER R. DAR
LICENSED PROFESSIONAL ENGINEER
No. 7808-S
HAWAII U.S.A.
Exp. Date: 4-30-20

THIS WORK WAS PREPARED BY ME OR UNDER MY SUPERVISION AND CONSTRUCTION OF THIS PROJECT WILL BE UNDER MY OBSERVATION

DEPARTMENT OF HAWAIIAN HOMELAND

NANAKULI FLOOD CONTROL
CHANNEL IMPROVEMENTS
NANAKULI VALLEY, OAHU HAWAII

CHANNEL SEGMENT 150 REPAIR DETAILS

| | |
|---|---|
| DESIGNED BY: | TTP |
| DRAWN BY: | AK, AP, DL |
| CHECKED BY: | AD |
| SUPV: | |
| DATE: | 03/05/2019 |

HAWAII ENGINEERING GROUP, Inc.
Civil & Structural Engineers
1088 BISHOP STREET #2506
HONOLULU, HI 96813
Tel: 808-533-2092

JOB NO.

SHEET C150
163OF 225 SHTS

FILE ___ DRAWER ___ ___ FOLDER ___ ___

Plot date: 15-Apr-2020
Full Size Plot

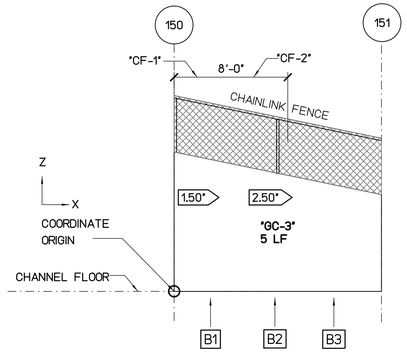


## WALL "B" FLATTEN VIEW

SCALE : 3/16" = 1'-0"

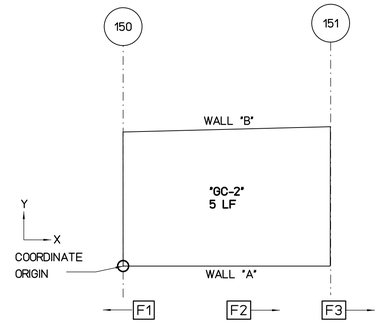


## FLOOR PLAN VIEW

SCALE : 3/16" = 1'-0"

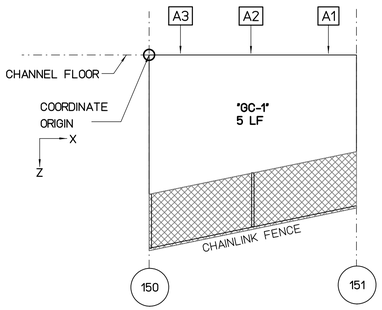


## WALL "A" FLATTEN VIEW

SCALE : 3/16" = 1'-0"

REPAIR LEGEND AND NOTES:

- [2] CRACK AND SPALL REPAIR TYPES, SEE SHEETS SR201 AND SR202 FOR DETAILS. TYPE [*] INDICATES NO-REPAIR
- (A) CHAINLINK FENCE REPAIR TYPES, SEE SHEETS SF201 AND SF202 FOR DETAILS
- 1.0> TOP OF WALL LEANING DISTANCE TOWARD CHANNEL IN INCHES, SEE SHEETS SL101 TO SL207 FOR CONCRETE LINING

PHOTO LEGEND:

- [A1] WALL "A" ELEVATION PHOTO IDENTIFICATION SEE FLATTEN VIEW FOR PHOTO LOCATION
- [B1] WALL "B" ELEVATION PHOTO IDENTIFICATION SEE FLATTEN VIEW FOR PHOTO LOCATION
- [F1] CHANNEL FLOOR PHOTO IDENTIFICATION SEE FLOOR PLAN VIEW FOR PHOTO LOCATION

B1



B2



B3



F1



F2



F3



A1



A2



A3



### SPALL REPAIR CHART

| MARK | LOCATION | REPAIR TYPE | SPALL DIMENSION L | SPALL DIMENSION W | SPALL DIMENSION D | SPALL VOLUME | SPALL CENTER COORDINATE X | SPALL CENTER COORDINATE Y OR Z | RATING |
|---|---|---|---|---|---|---|---|---|---|
| | | | | | | | | | |
| | | | | | | | | | |
| | | | | | | | | | |
| | | | | | | | | | |
| | | | | | | | | | |
| | | | | | | | | | |
| | | | | | | | | | |
| | | | | | | | | | |

### CHAINLINK FENCE REPAIR CHART

| MARK | LOCATION | REPAIR TYPE | POSTS | TOP RAIL | BOTTOM WIRE | BRACE | FABRIC |
|---|---|---|---|---|---|---|---|
| "CF-1" | WALL "B" | (C) | - | DAMAGED 8' | - | - | - |
| "CF-2" | WALL "B" | (E) | - | | - | - | DAMAGED 8'x4' |
| | | | | | | | |
| | | | | | | | |
| | | | | | | | |
| | | | | | | | |
| | | | | | | | |
| | | | | | | | |
| | | | | | | | |

### CRACK REPAIR CHART

| MARK | LOCATION | REPAIR TYPE | GENERAL CRACKS (LF) | MAJOR CRACKS WIDTH (IN) | MAJOR CRACKS LENGTH (FT) | MAJOR CRACKS START PNT X | MAJOR CRACKS START PNT Y,Z | MAJOR CRACKS END PNT X | MAJOR CRACKS END PNT Y,Z | RATING |
|---|---|---|---|---|---|---|---|---|---|---|
| "GC-1" | WALL "A" | [*] | 5 | - | - | - | - | - | - | 9 |
| "GC-2" | FLOOR | [*] | 5 | - | - | - | - | - | - | 9 |
| "GC-3" | WALL "B" | [*] | 5 | - | - | - | - | - | - | 9 |
| | | | | | | | | | | |
| | | | | | | | | | | |
| | | | | | | | | | | |
| | | | | | | | | | | |

NOTES:

1- CONCRETE LINING IS PROVIDED IN THIS SEGMENT SEE SHEET SL203

2- THERE IS NO SPALL AND CRACK REPAIRS IN THIS SEGMENT

GRAPHIC SCALES:

0 1' 2' 4' 8' 12' 16'

3/16"=1'-0"

| REVISION NO. | DATE | REVISIONS | BY |
|---|---|---|---|
| | | | |

ATHER R. DAR
LICENSED PROFESSIONAL ENGINEER
No. 7808-S
HAWAII U.S.A.

Exp. Date: 4-30-20

THIS WORK WAS PREPARED BY ME OR UNDER MY SUPERVISION AND CONSTRUCTION OF THIS PROJECT WILL BE UNDER MY OBSERVATION

DEPARTMENT OF HAWAIIAN HOMELAND

# NANAKULI FLOOD CONTROL CHANNEL IMPROVEMENTS NANAKULI VALLEY, OAHU HAWAII

## CHANNEL SEGMENT [151] REPAIR DETAILS

| | |
|---|---|
| DESIGNED BY: | TTP |
| DRAWN BY: | AK, AP, DL |
| CHECKED BY: | AD |
| SUPV: | |
| DATE: | 03/05/2019 |

HAWAII ENGINEERING GROUP, Inc.
Civil & Structural Engineers
1088 BISHOP STREET #2506
HONOLULU, HI 96813
Tel: 808-533-2092

JOB NO.

SHEET C151

164 OF 225 SHTS

FILE ___ DRAWER ___ ___ FOLDER ___ ___

Plot date: 15-Apr-2020
Full Size Plot

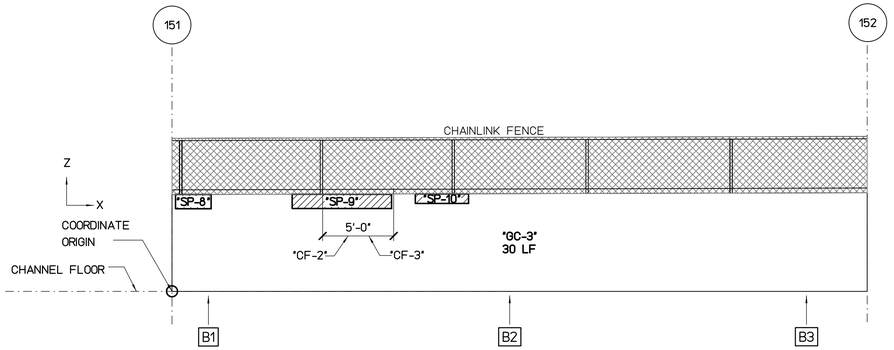


## WALL "B" FLATTEN VIEW

SCALE : 3/16" = 1'-0"

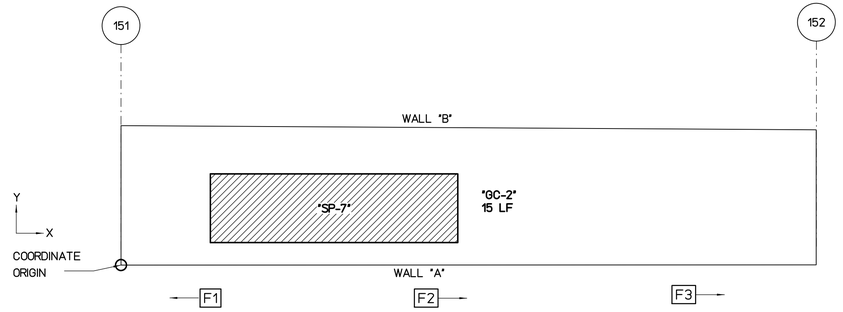


## FLOOR PLAN VIEW

SCALE : 3/16" = 1'-0"

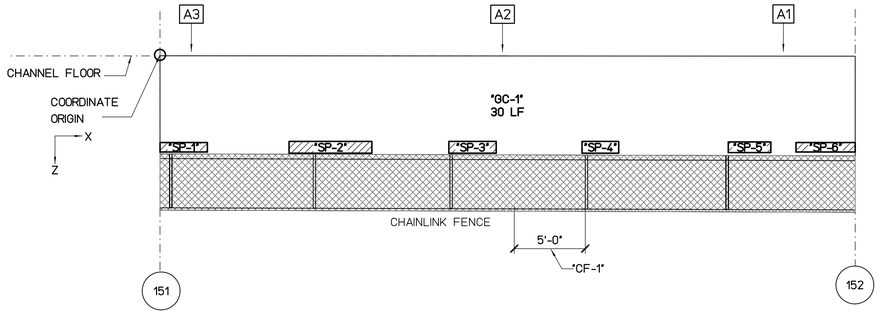


## WALL "A" FLATTEN VIEW

SCALE : 3/16" = 1'-0"

REPAIR LEGEND AND NOTES:

- [2] CRACK AND SPALL REPAIR TYPES, SEE SHEETS SR201 AND SR202 FOR DETAILS. TYPE [*] INDICATES NO-REPAIR
- (A) CHAINLINK FENCE REPAIR TYPES, SEE SHEETS SF201 AND SF202 FOR DETAILS
- 1.0> TOP OF WALL LEANING DISTANCE TOWARD CHANNEL IN INCHES, SEE SHEETS SL101 TO SL207 FOR CONCRETE LINING

PHOTO LEGEND:

- [A1] WALL "A" ELEVATION PHOTO IDENTIFICATION SEE FLATTEN VIEW FOR PHOTO LOCATION
- [B1] WALL "B" ELEVATION PHOTO IDENTIFICATION SEE FLATTEN VIEW FOR PHOTO LOCATION
- [F1] CHANNEL FLOOR PHOTO IDENTIFICATION SEE FLOOR PLAN VIEW FOR PHOTO LOCATION

B1



B2



B3



F1



F2



F3



A1



A2



A3



### SPALL REPAIR CHART

| MARK | LOCATION | REPAIR TYPE | SPALL DIMENSION L | SPALL DIMENSION W | SPALL DIMENSION D | SPALL VOLUME | SPALL CENTER COORDINATE X | SPALL CENTER COORDINATE Y OR Z | RATING |
|---|---|---|---|---|---|---|---|---|---|
| "SP-1" | WALL "A" | [3] | 40 | 8 | 2 | 640 | 1.5 | 6.5 | 7 |
| "SP-2" | WALL "A" | [3] | 70 | 10 | 2 | 1400 | 12 | 6.5 | 7 |
| "SP-3" | WALL "A" | [3] | 40 | 10 | 2 | 800 | 22 | 6.5 | 7 |
| "SP-4" | WALL "A" | [3] | 31 | 10 | 2 | 620 | 31 | 6.5 | 7 |
| "SP-5" | WALL "A" | [3] | 36 | 9 | 2 | 648 | 41.5 | 6.5 | 7 |
| "SP-6" | WALL "A" | [3] | 50 | 8 | 2 | 800 | 47 | 6.5 | 7 |
| "SP-7" | FLOOR | [3] | 209 | 58 | 3 | 36366 | 15 | 4 | 6 |
| "SP-8" | WALL "B" | [3] | 30 | 12 | 3 | 1080 | 1.5 | 6.5 | 7 |
| "SP-9" | WALL "B" | [3] | 84 | 12 | 3 | 3024 | 12 | 6.5 | 6 |
| "SP-10" | WALL "B" | [3] | 45 | 8 | 2 | 720 | 19 | 6.5 | 7 |

### CHAINLINK FENCE REPAIR CHART

| MARK | LOCATION | REPAIR TYPE | POSTS | TOP RAIL | BOTTOM WIRE | BRACE | FABRIC |
|---|---|---|---|---|---|---|---|
| "CF-1" | WALL "A" | (C) | - | BENT 5' | - | - | - |
| "CF-2" | WALL "B" | (C) | - | DAMAGED 5' | - | - | - |
| "CF-3" | WALL "B" | (E) | - | - | - | - | DAMAGED 5'x4' |

### CRACK REPAIR CHART

| MARK | LOCATION | REPAIR TYPE | GENERAL CRACKS (LF) | MAJOR CRACKS WIDTH (IN) | MAJOR CRACKS LENGTH (FT) | MAJOR CRACKS START PNT X | MAJOR CRACKS START PNT Y,Z | MAJOR CRACKS END PNT X | MAJOR CRACKS END PNT Y,Z | RATING |
|---|---|---|---|---|---|---|---|---|---|---|
| "GC-1" | WALL "A" | [*] | 30 | - | - | - | - | - | - | 8 |
| "GC-2" | FLOOR | [*] | 15 | - | - | - | - | - | - | 8 |
| "GC-3" | WALL "B" | [*] | 30 | - | - | - | - | - | - | 8 |

GRAPHIC SCALES:

0 1' 2' 4' 8' 12' 16'

3/16"=1'-0"

| REVISION NO. | DATE | REVISIONS | BY |
|---|---|---|---|

ARTHER R. DAR
LICENSED PROFESSIONAL ENGINEER
No. 7808-S
HAWAII U.S.A.
Exp. Date: 4-30-20

THIS WORK WAS PREPARED BY ME OR UNDER MY SUPERVISION AND CONSTRUCTION OF THIS PROJECT WILL BE UNDER MY OBSERVATION

DEPARTMENT OF HAWAIIAN HOMELAND

# NANAKULI FLOOD CONTROL CHANNEL IMPROVEMENTS NANAKULI VALLEY, OAHU HAWAII

CHANNEL SEGMENT [152] REPAIR DETAILS

DESIGNED BY: TTP
DRAWN BY: AK, AP, DL
CHECKED BY: AD
SUPV:
DATE: 03/05/2019

HAWAII ENGINEERING GROUP, Inc.
Civil & Structural Engineers
1088 BISHOP STREET #2506
HONOLULU, HI 96813
Tel: 808-533-2092

JOB NO.

SHEET C152
165 OF 225 SHTS

FILE ___ DRAWER ___ ___ FOLDER ___ ___

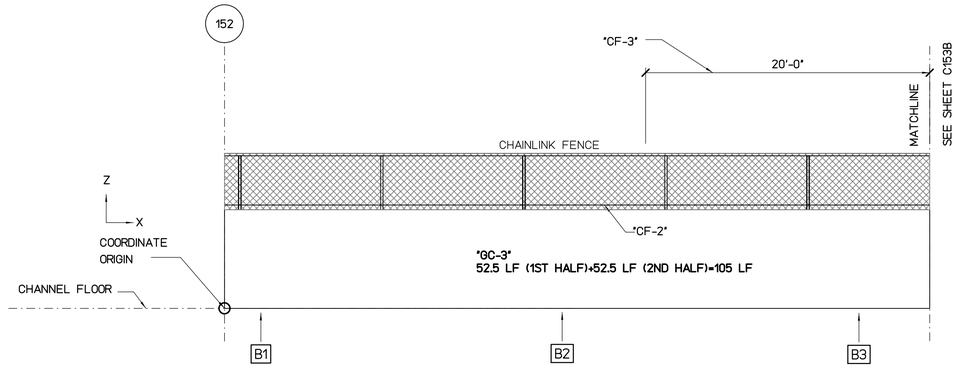


## WALL "B" FLATTEN VIEW

SCALE : 3/16" = 1'-0"

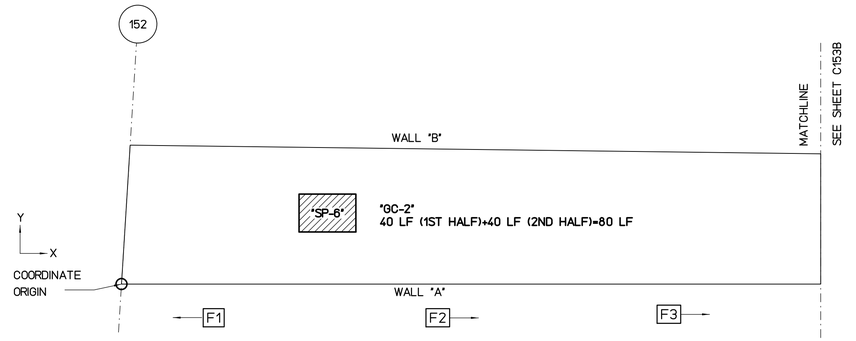


## FLOOR PLAN VIEW

SCALE : 3/16" = 1'-0"

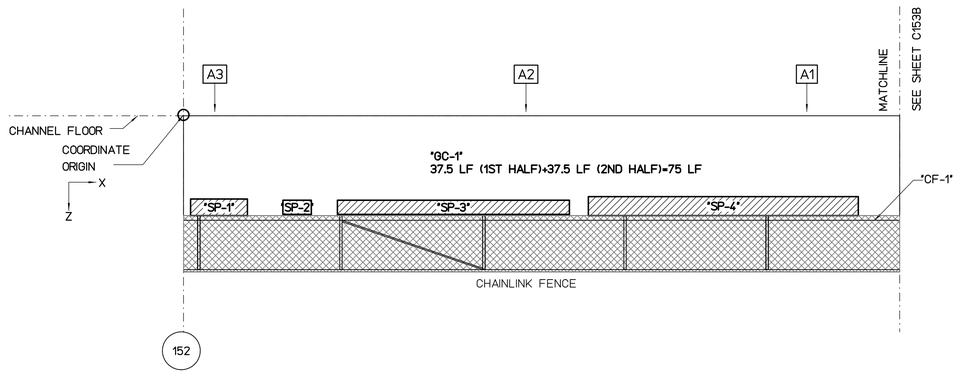


## WALL "A" FLATTEN VIEW

SCALE : 3/16" = 1'-0"

REPAIR LEGEND AND NOTES:

- 2 — CRACK AND SPALL REPAIR TYPES, SEE SHEETS SR201 AND SR202 FOR DETAILS. TYPE [*] INDICATES NO-REPAIR
- (A) — CHAINLINK FENCE REPAIR TYPES, SEE SHEETS SF201 AND SF202 FOR DETAILS
- 1.0 — TOP OF WALL LEANING DISTANCE TOWARD CHANNEL IN INCHES, SEE SHEETS SL101 TO SL207 FOR CONCRETE LINING

PHOTO LEGEND:

- A1 — WALL "A" ELEVATION PHOTO IDENTIFICATION SEE FLATTEN VIEW FOR PHOTO LOCATION
- B1 — WALL "B" ELEVATION PHOTO IDENTIFICATION SEE FLATTEN VIEW FOR PHOTO LOCATION
- F1 — CHANNEL FLOOR PHOTO IDENTIFICATION SEE FLOOR PLAN VIEW FOR PHOTO LOCATION

B1



B2



B3



F1



F2



F3



A1



A2



A3



### SPALL REPAIR CHART

| MARK | LOCATION | REPAIR TYPE | SPALL DIMENSION L | SPALL DIMENSION W | SPALL DIMENSION D | SPALL VOLUME | SPALL CENTER COORDINATE X | SPALL CENTER COORDINATE Y OR Z | RATING |
|---|---|---|---|---|---|---|---|---|---|
| "SP-1" | WALL "A" | 3 | 48 | 14 | 3 | 2016 | 2.5 | 6.5 | 7 |
| "SP-2" | WALL "A" | 3 | 24 | 12 | 2 | 576 | 8 | 6.5 | 7 |
| "SP-3" | WALL "A" | 3 | 196 | 12 | 4 | 9408 | 19 | 6.5 | 6 |
| "SP-4" | WALL "A" | 3 | 228 | 16 | 4 | 14592 | 38 | 6.5 | 6 |
| "SP-5" | WALL "A" | 3 | 36 | 10 | 2 | 720 | 63 | 6.5 | 7 |
| "SP-6" | FLOOR | 3 | 48 | 32 | 3 | 4608 | 14.5 | 5 | 7 |
| "SP-7" | WALL "B" | 3 | 192 | 10 | 3 | 5760 | 55 | 6.5 | 6 |

### CHAINLINK FENCE REPAIR CHART

| MARK | LOCATION | REPAIR TYPE | POSTS | TOP RAIL | BOTTOM WIRE | BRACE | FABRIC |
|---|---|---|---|---|---|---|---|
| "CF-1" | WALL "A" | (D) | - | - | DAMAGED 50' | - | - |
| "CF-2" | WALL "B" | (D) | - | - | DAMAGED 50' | - | - |
| "CF-3" | WALL "B" | (E) | - | - | - | - | DAMAGED 20' |

### CRACK REPAIR CHART

| MARK | LOCATION | REPAIR TYPE | GENERAL CRACKS (LF) | MAJOR CRACKS WIDTH (IN) | MAJOR CRACKS LENGTH (FT) | MAJOR CRACKS START PNT X | MAJOR CRACKS START PNT Y,Z | MAJOR CRACKS END PNT X | MAJOR CRACKS END PNT Y,Z | RATING |
|---|---|---|---|---|---|---|---|---|---|---|
| "MC-1" | WALL "B" | 1 | - | 0.19 | 4 | 62 | 2.5 | 62 | 6.5 | 7 |
| "GC-1" | WALL "A" | * | 75 | - | - | - | - | - | - | 8 |
| "GC-2" | FLOOR | * | 80 | - | - | - | - | - | - | 8 |
| "GC-3" | WALL "B" | * | 105 | - | - | - | - | - | - | 8 |

GRAPHIC SCALES:

0 1' 2' 4' 8' 12' 16'

3/16"=1'-0"

| REVISION NO. | DATE | REVISIONS | BY |
|---|---|---|---|

ATHER R. DAR
LICENSED PROFESSIONAL ENGINEER
No. 7808-S
HAWAII U.S.A.

Exp. Date: 4-30-20

THIS WORK WAS PREPARED BY ME OR UNDER MY SUPERVISION AND CONSTRUCTION OF THIS PROJECT WILL BE UNDER MY OBSERVATION

DEPARTMENT OF HAWAIIAN HOMELAND

# NANAKULI FLOOD CONTROL CHANNEL IMPROVEMENTS NANAKULI VALLEY, OAHU HAWAII

CHANNEL SEGMENT 153 REPAIR DETAILS - 1ST HALF

| | |
|---|---|
| DESIGNED BY: | TTP |
| DRAWN BY: | AK, AP, DL |
| CHECKED BY: | AD |
| SUPV: | |
| DATE: | 03/05/2019 |


HAWAII ENGINEERING GROUP, Inc.
Civil & Structural Engineers
1088 BISHOP STREET #2506
HONOLULU, HI 96813
Tel: 808-533-2092


JOB NO.

SHEET C153A

166 OF 225 SHTS

FILE ___ DRAWER ___ ___ FOLDER ___ ___

Plot date: 15-Apr-2020

Full Size Plot

Plot date: 15-Apr-2020
Full Size Plot

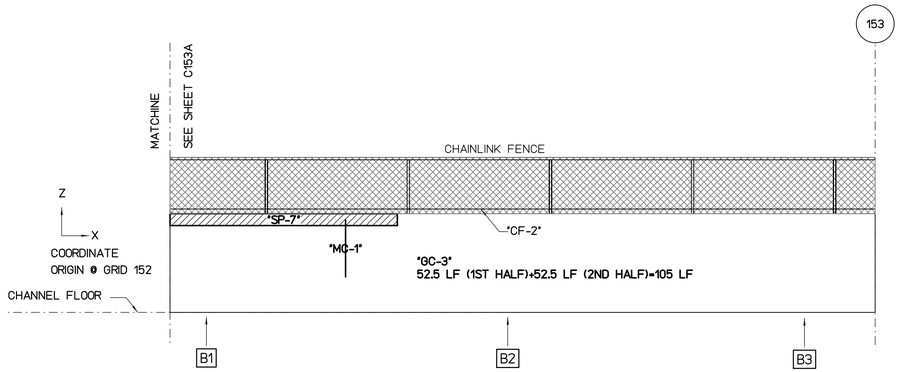


## WALL "B" FLATTEN VIEW

SCALE : 3/16" = 1'-0"

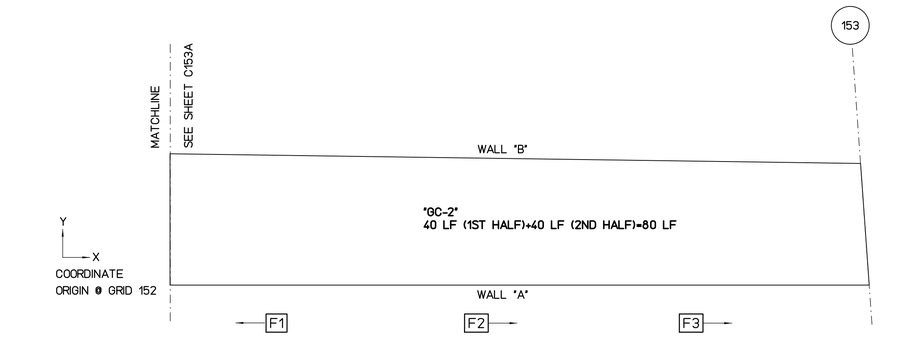


## FLOOR PLAN VIEW

SCALE : 3/16" = 1'-0"

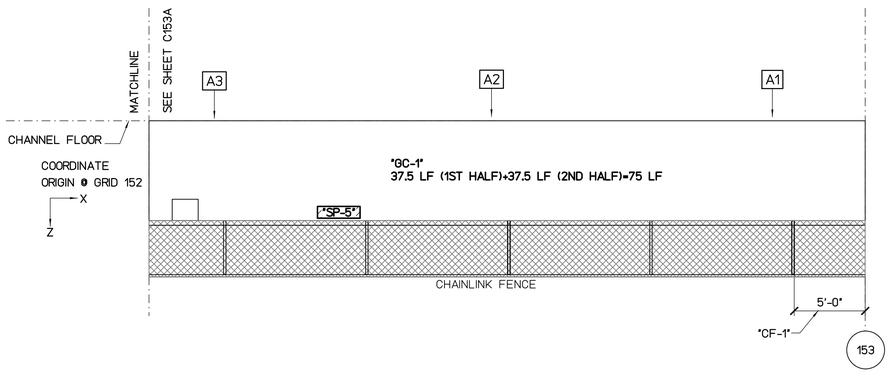


## WALL "A" FLATTEN VIEW

SCALE : 3/16" = 1'-0"

REPAIR LEGEND AND NOTES:

- [2] CRACK AND SPALL REPAIR TYPES, SEE SHEETS SR201 AND SR202 FOR DETAILS. TYPE [*] INDICATES NO-REPAIR
- (A) CHAINLINK FENCE REPAIR TYPES, SEE SHEETS SF201 AND SF202 FOR DETAILS
- [1.0] TOP OF WALL LEANING DISTANCE TOWARD CHANNEL IN INCHES, SEE SHEETS SL101 TO SL207 FOR CONCRETE LINING

PHOTO LEGEND:

- [A1] WALL "A" ELEVATION PHOTO IDENTIFICATION SEE FLATTEN VIEW FOR PHOTO LOCATION
- [B1] WALL "B" ELEVATION PHOTO IDENTIFICATION SEE FLATTEN VIEW FOR PHOTO LOCATION
- [F1] CHANNEL FLOOR PHOTO IDENTIFICATION SEE FLOOR PLAN VIEW FOR PHOTO LOCATION

B1



B2



B3



F1



F2



F3



A1



A2



A3



### SPALL REPAIR CHART

| MARK | LOCATION | REPAIR TYPE | SPALL DIMENSION L | SPALL DIMENSION W | SPALL DIMENSION D | SPALL VOLUME | SPALL CENTER COORDINATE X | SPALL CENTER COORDINATE Y OR Z | RATING |
|---|---|---|---|---|---|---|---|---|---|
| "SP-1" | WALL "A" | 3 | 48 | 14 | 3 | 2016 | 2.5 | 6.5 | 7 |
| "SP-2" | WALL "A" | 3 | 24 | 12 | 2 | 576 | 8 | 6.5 | 7 |
| "SP-3" | WALL "A" | 3 | 196 | 12 | 4 | 9408 | 19 | 6.5 | 6 |
| "SP-4" | WALL "A" | 3 | 228 | 16 | 4 | 14592 | 38 | 6.5 | 6 |
| "SP-5" | WALL "A" | 3 | 36 | 10 | 2 | 720 | 63 | 6.5 | 7 |
| "SP-6" | FLOOR | 3 | 48 | 32 | 3 | 4608 | 14.5 | 5 | 7 |
| "SP-7" | WALL "B" | 3 | 192 | 10 | 3 | 5760 | 55 | 6.5 | 6 |

### CHAINLINK FENCE REPAIR CHART

| MARK | LOCATION | REPAIR TYPE | POSTS | TOP RAIL | BOTTOM WIRE | BRACE | FABRIC |
|---|---|---|---|---|---|---|---|
| "CF-1" | WALL "A" | (E) | - | - | - | - | DAMAGED 5'x4' |
| "CF-2" | WALL "B" | (D) | - | - | DAMAGED 50' | - | - |

### CRACK REPAIR CHART

| MARK | LOCATION | REPAIR TYPE | GENERAL CRACKS (LF) | MAJOR CRACKS WIDTH (IN) | MAJOR CRACKS LENGTH (FT) | MAJOR CRACKS START PNT X | MAJOR CRACKS START PNT Y,Z | MAJOR CRACKS END PNT X | MAJOR CRACKS END PNT Y,Z | RATING |
|---|---|---|---|---|---|---|---|---|---|---|
| "MC-1" | WALL "B" | 1 | - | 0.19 | 4 | 62 | 2.5 | 62 | 6.5 | 7 |
| "GC-1" | WALL "A" | * | 75 | - | - | - | - | - | - | 8 |
| "GC-2" | FLOOR | * | 80 | - | - | - | - | - | - | 8 |
| "GC-3" | WALL "B" | * | 105 | - | - | - | - | - | - | 8 |

GRAPHIC SCALES:

0 1' 2' 4' 8' 12' 16'

3/16"=1'-0"

| REVISION NO. | DATE | REVISIONS | BY |
|---|---|---|---|

ATHER R. DAR
LICENSED PROFESSIONAL ENGINEER
No. 7808-S
HAWAII U.S.A.
Exp. Date: 4-30-20

THIS WORK WAS PREPARED BY ME OR UNDER MY SUPERVISION AND CONSTRUCTION OF THIS PROJECT WILL BE UNDER MY OBSERVATION

DEPARTMENT OF HAWAIIAN HOMELAND

# NANAKULI FLOOD CONTROL CHANNEL IMPROVEMENTS NANAKULI VALLEY, OAHU HAWAII

CHANNEL SEGMENT [153] REPAIR DETAILS - 2ND HALF

| | |
|---|---|
| DESIGNED BY: | TTP |
| DRAWN BY: | AK, AP, DL |
| CHECKED BY: | AD |
| SUPV: | |
| DATE: | 03/05/2019 |

HAWAII ENGINEERING GROUP, Inc.
Civil & Structural Engineers
1088 BISHOP STREET #2506
HONOLULU, HI 96813
Tel: 808-533-2092

JOB NO.

SHEET C153B

167 OF 225 SHTS

FILE ___ DRAWER ___ ___ FOLDER ___ ___

Plot date: 15-Apr-2020
Full Size Plot

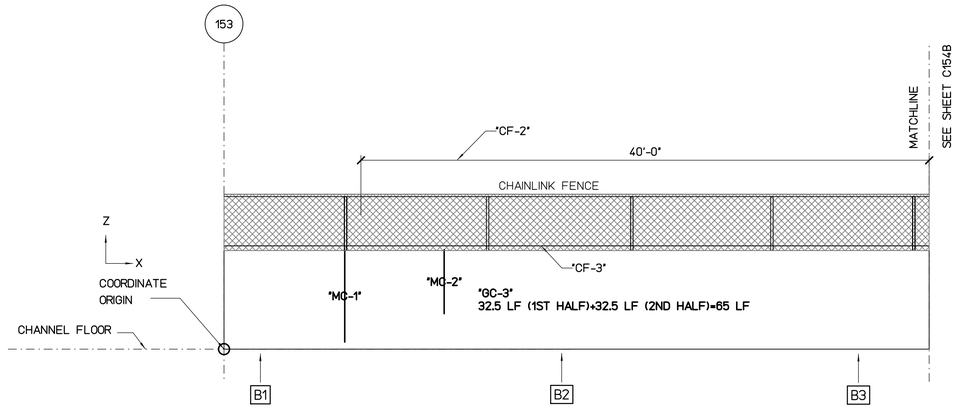


## WALL "B" FLATTEN VIEW

SCALE : 3/16" = 1'-0"

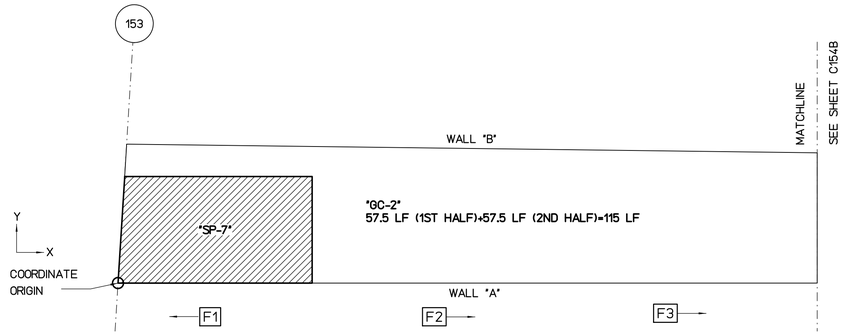


## FLOOR PLAN VIEW

SCALE : 3/16" = 1'-0"

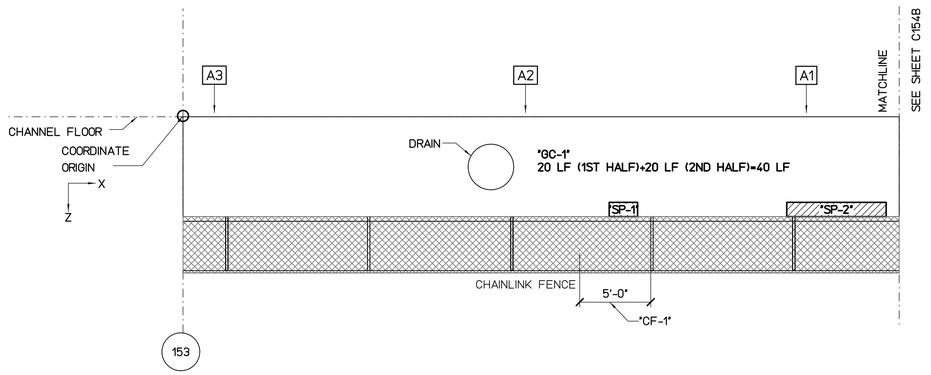


## WALL "A" FLATTEN VIEW

SCALE : 3/16" = 1'-0"

REPAIR LEGEND AND NOTES:

- 2 — CRACK AND SPALL REPAIR TYPES, SEE SHEETS SR201 AND SR202 FOR DETAILS. TYPE [*] INDICATES NO-REPAIR
- (A) — CHAINLINK FENCE REPAIR TYPES, SEE SHEETS SF201 AND SF202 FOR DETAILS
- 1.0 — TOP OF WALL LEANING DISTANCE TOWARD CHANNEL IN INCHES, SEE SHEETS SL101 TO SL207 FOR CONCRETE LINING

PHOTO LEGEND:

- A1 — WALL "A" ELEVATION PHOTO IDENTIFICATION SEE FLATTEN VIEW FOR PHOTO LOCATION
- B1 — WALL "B" ELEVATION PHOTO IDENTIFICATION SEE FLATTEN VIEW FOR PHOTO LOCATION
- F1 — CHANNEL FLOOR PHOTO IDENTIFICATION SEE FLOOR PLAN VIEW FOR PHOTO LOCATION

B1



B2



B3



F1



F2



F3



A1



A2



A3



### SPALL REPAIR CHART

| MARK | LOCATION | REPAIR TYPE | SPALL DIMENSION L | SPALL DIMENSION W | SPALL DIMENSION D | SPALL VOLUME | SPALL CENTER COORDINATE X | SPALL CENTER COORDINATE Y OR Z | RATING |
|---|---|---|---|---|---|---|---|---|---|
| *SP-1* | WALL *A* | [*] | 24 | 12 | 2 | 576 | 31 | 6 | 7 |
| *SP-2* | WALL *A* | [*] | 84 | 12 | 3 | 3024 | 46 | 6 | 6 |
| *SP-3* | WALL *A* | [*] | 60 | 12 | 2 | 1440 | 57 | 6 | 7 |
| *SP-4* | WALL *A* | [*] | 36 | 24 | 2 | 1728 | 83 | 6 | 7 |
| *SP-5* | WALL *A* | [*] | 48 | 12 | 2 | 1152 | 90 | 6 | 7 |
| *SP-6* | WALL *A* | [*] | 48 | 24 | 4 | 4608 | 98 | 6 | 6 |
| *SP-7* | FLOOR | [*] | 164 | 90 | 2 | 29520 | 7 | 4 | 7 |
| *SP-8* | WALL *B* | [*] | 36 | 6 | 2 | 432 | 71 | 6.5 | 7 |
| *SP-9* | WALL *B* | [*] | 12 | 12 | 3 | 432 | 100 | 7 | 6 |

### CHAINLINK FENCE REPAIR CHART

| MARK | LOCATION | REPAIR TYPE | POSTS | TOP RAIL | BOTTOM WIRE | BRACE | FABRIC |
|---|---|---|---|---|---|---|---|
| *CF-1* | WALL *A* | (E) | - | - | - | - | DAMAGED 5'x4' |
| *CF-2* | WALL *B* | (E) | - | - | - | - | DAMAGED 40'x4' |
| *CF-3* | WALL *B* | (D) | - | - | DAMAGED 50' | - | - |

### CRACK REPAIR CHART

| MARK | LOCATION | REPAIR TYPE | GENERAL CRACKS (LF) | MAJOR CRACKS WIDTH (IN) | MAJOR CRACKS LENGTH (FT) | MAJOR CRACKS START PNT X | MAJOR CRACKS START PNT Y,Z | MAJOR CRACKS END PNT X | MAJOR CRACKS END PNT Y,Z | RATING |
|---|---|---|---|---|---|---|---|---|---|---|
| *MC-1* | WALL *B* | [*] | - | 0.25 | 7 | 8.5 | 0.5 | 8.5 | 7 | 7 |
| *MC-2* | WALL *B* | [*] | - | 0.25 | 5 | 15.5 | 2.5 | 15.5 | 7 | 7 |
| *GC-1* | WALL *A* | [*] | 40 | - | - | - | - | - | - | 8 |
| *GC-2* | FLOOR | [*] | 115 | - | - | - | - | - | - | 8 |
| *GC-3* | WALL *B* | [*] | 65 | - | - | - | - | - | - | 8 |
| | | | | | | | | | | |
| | | | | | | | | | | |

NOTES:

1- CONCRETE LINING IS PROVIDED IN THIS SEGMENT SEE SHEET SL204

2- THERE IS NO SPALL AND CRACK REPAIRS IN THIS SEGMENT

GRAPHIC SCALES:

0 1' 2' 4' 8' 12' 16'

3/16"=1'-0"

| REVISION NO. | DATE | REVISIONS | BY |
|---|---|---|---|

ATHER R DAR
LICENSED PROFESSIONAL ENGINEER
No. 7808-S
HAWAII U.S.A.

Exp. Date: 4-30-20

THIS WORK WAS PREPARED BY ME OR UNDER MY SUPERVISION AND CONSTRUCTION OF THIS PROJECT WILL BE UNDER MY OBSERVATION

DEPARTMENT OF HAWAIIAN HOMELAND

# NANAKULI FLOOD CONTROL CHANNEL IMPROVEMENTS NANAKULI VALLEY, OAHU HAWAII

CHANNEL SEGMENT 154 REPAIR DETAILS - 1ST HALF

| | |
|---|---|
| DESIGNED BY: | TTP |
| DRAWN BY: | AK, AP, DL |
| CHECKED BY: | AD |
| SUPV: | |
| DATE: | 03/05/2019 |

HAWAII ENGINEERING GROUP, Inc.
Civil & Structural Engineers
1088 BISHOP STREET #2506
HONOLULU, HI 96813
Tel: 808-533-2092

JOB NO.

SHEET C154A

168OF 225 SHTS

FILE ___ DRAWER ___ ___ FOLDER ___ ___

Plot date: 15-Apr-2020
Full Size Plot

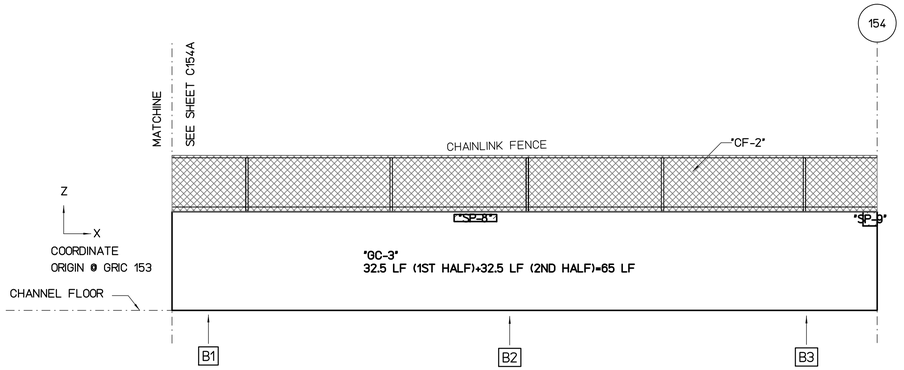


## WALL "B" FLATTEN VIEW

SCALE : 3/16" = 1'-0"

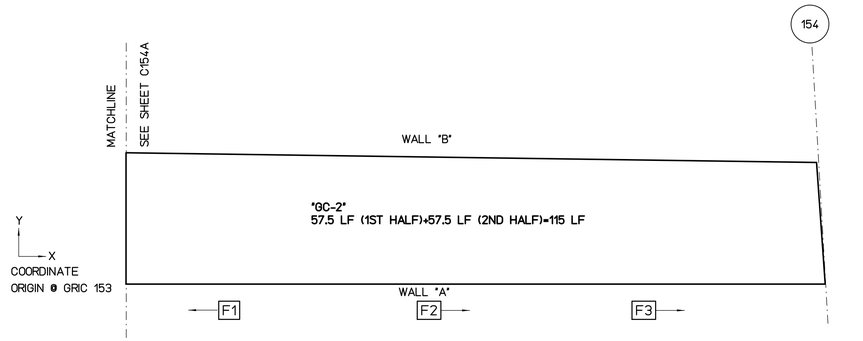


## FLOOR PLAN VIEW

SCALE : 3/16" = 1'-0"

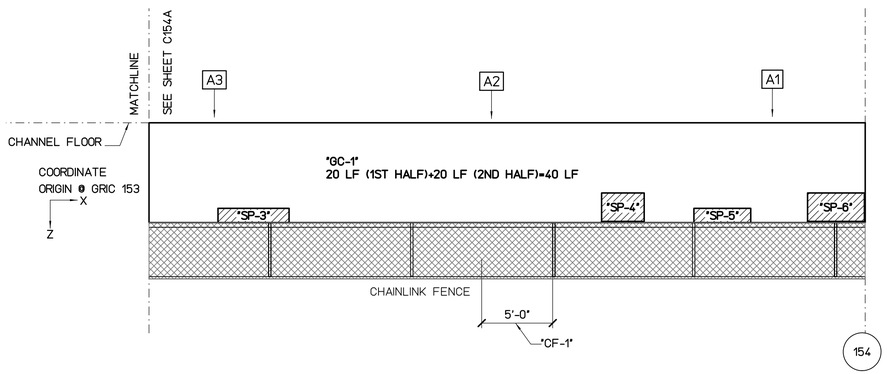


## WALL "A" FLATTEN VIEW

SCALE : 3/16" = 1'-0"

REPAIR LEGEND AND NOTES:

- 2 — CRACK AND SPALL REPAIR TYPES, SEE SHEETS SR201 AND SR202 FOR DETAILS. TYPE [*] INDICATES NO-REPAIR
- (A) — CHAINLINK FENCE REPAIR TYPES, SEE SHEETS SF201 AND SF202 FOR DETAILS
- 1.0 — TOP OF WALL LEANING DISTANCE TOWARD CHANNEL IN INCHES, SEE SHEETS SL101 TO SL207 FOR CONCRETE LINING

PHOTO LEGEND:

- A1 — WALL "A" ELEVATION PHOTO IDENTIFICATION SEE FLATTEN VIEW FOR PHOTO LOCATION
- B1 — WALL "B" ELEVATION PHOTO IDENTIFICATION SEE FLATTEN VIEW FOR PHOTO LOCATION
- F1 — CHANNEL FLOOR PHOTO IDENTIFICATION SEE FLOOR PLAN VIEW FOR PHOTO LOCATION

B1



B2



B3



F1



F2



F3



A1



A2



A3



### SPALL REPAIR CHART

| MARK | LOCATION | REPAIR TYPE | SPALL DIMENSION L | SPALL DIMENSION W | SPALL DIMENSION D | SPALL VOLUME | SPALL CENTER COORDINATE X | SPALL CENTER COORDINATE Y OR Z | RATING |
|---|---|---|---|---|---|---|---|---|---|
| "SP-1" | WALL "A" | [*] | 24 | 12 | 2 | 576 | 31 | 6 | 7 |
| "SP-2" | WALL "A" | [*] | 84 | 12 | 3 | 3024 | 46 | 6 | 6 |
| "SP-3" | WALL "A" | [*] | 60 | 12 | 2 | 1440 | 57 | 6 | 7 |
| "SP-4" | WALL "A" | [*] | 36 | 24 | 2 | 1728 | 83 | 6 | 7 |
| "SP-5" | WALL "A" | [*] | 48 | 12 | 2 | 1152 | 90 | 6 | 7 |
| "SP-6" | WALL "A" | [*] | 48 | 24 | 4 | 4608 | 98 | 6 | 6 |
| "SP-7" | FLOOR | [*] | 164 | 90 | 2 | 29520 | 7 | 4 | 7 |
| "SP-8" | WALL "B" | [*] | 36 | 6 | 2 | 432 | 71 | 6.5 | 7 |
| "SP-9" | WALL "B" | [*] | 12 | 12 | 3 | 432 | 100 | 7 | 6 |

### CHAINLINK FENCE REPAIR CHART

| MARK | LOCATION | REPAIR TYPE | POSTS | TOP RAIL | BOTTOM WIRE | BRACE | FABRIC |
|---|---|---|---|---|---|---|---|
| "CF-1" | WALL "A" | (E) | - | - | - | - | DAMAGED 5'x4' |
| "CF-2" | WALL "B" | (E) | - | - | - | - | DAMAGED 50'x4' |

### CRACK REPAIR CHART

| MARK | LOCATION | REPAIR TYPE | GENERAL CRACKS (LF) | MAJOR CRACKS WIDTH (IN) | MAJOR CRACKS LENGTH (FT) | MAJOR CRACKS START PNT X | MAJOR CRACKS START PNT Y,Z | MAJOR CRACKS END PNT X | MAJOR CRACKS END PNT Y,Z | RATING |
|---|---|---|---|---|---|---|---|---|---|---|
| "MC-1" | WALL "B" | [*] | - | 0.25 | 7 | 8.5 | 0.5 | 8.5 | 7 | 7 |
| "MC-2" | WALL "B" | [*] | - | 0.25 | 5 | 15.5 | 2.5 | 15.5 | 7 | 7 |
| "GC-1" | WALL "A" | [*] | 40 | - | - | - | - | - | - | 8 |
| "GC-2" | FLOOR | [*] | 115 | - | - | - | - | - | - | 8 |
| "GC-3" | WALL "B" | [*] | 65 | - | - | - | - | - | - | 8 |

NOTES:

1- CONCRETE LINING IS PROVIDED IN THIS SEGMENT SEE SHEET SL204

2- THERE IS NO SPALL AND CRACK REPAIRS IN THIS SEGMENT

GRAPHIC SCALES:

0 1' 2' 4' 8' 12' 16'

3/16"=1'-0"

| REVISION NO. | DATE | REVISIONS | BY |
|---|---|---|---|

ATHER R. DAR
LICENSED PROFESSIONAL ENGINEER
No. 7808-S
HAWAII U.S.A.
Exp. Date: 4-30-20

THIS WORK WAS PREPARED BY ME OR UNDER MY SUPERVISION AND CONSTRUCTION OF THIS PROJECT WILL BE UNDER MY OBSERVATION

DEPARTMENT OF HAWAIIAN HOMELAND

# NANAKULI FLOOD CONTROL CHANNEL IMPROVEMENTS NANAKULI VALLEY, OAHU HAWAII

CHANNEL SEGMENT 154 REPAIR DETAILS - 2ND HALF

DESIGNED BY: TTP
DRAWN BY: AK, AP, DL
CHECKED BY: AD
SUPV:
DATE: 03/05/2019

HAWAII ENGINEERING GROUP, Inc.
Civil & Structural Engineers
1088 BISHOP STREET #2506
HONOLULU, HI 96813
Tel: 808-533-2092

JOB NO.

SHEET C154B
169OF 225 SHTS

FILE ___ DRAWER ___ ___ FOLDER ___ ___

Plot date: 15-Apr-2020
Full Size Plot

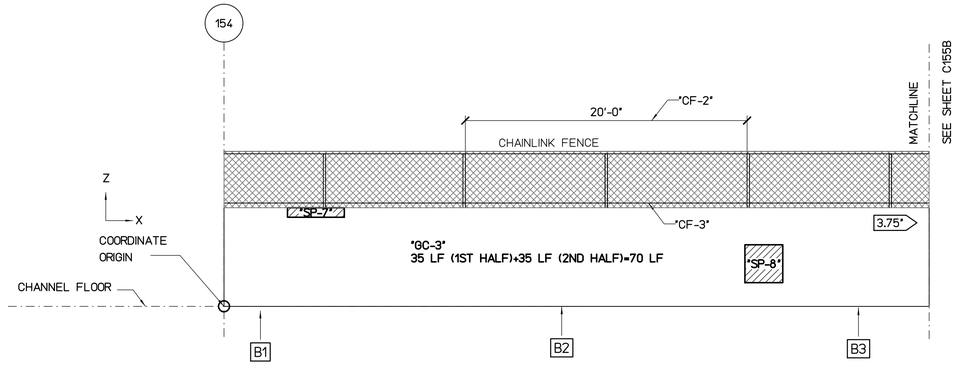


## WALL "B" FLATTEN VIEW

SCALE : 3/16" = 1'-0"

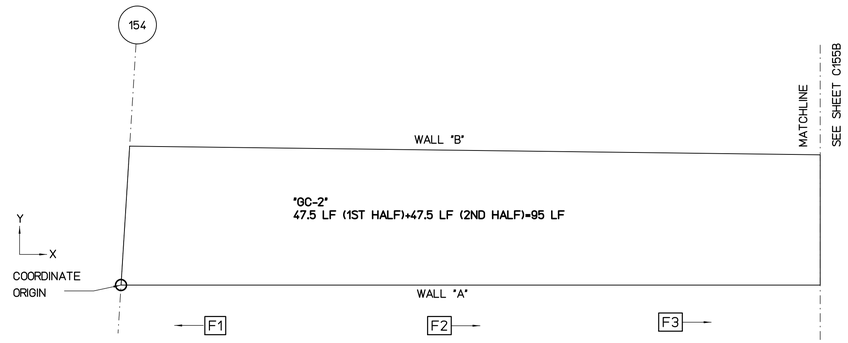


## FLOOR PLAN VIEW

SCALE : 3/16" = 1'-0"

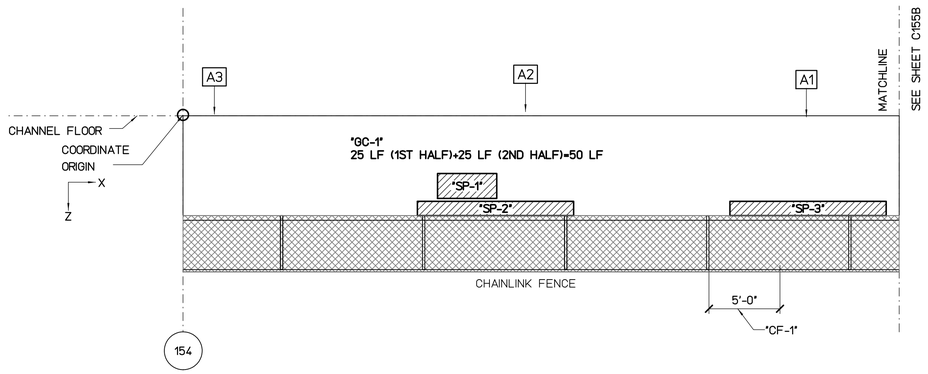


## WALL "A" FLATTEN VIEW

SCALE : 3/16" = 1'-0"

REPAIR LEGEND AND NOTES:

- [2] CRACK AND SPALL REPAIR TYPES, SEE SHEETS SR201 AND SR202 FOR DETAILS. TYPE [*] INDICATES NO-REPAIR
- (A) CHAINLINK FENCE REPAIR TYPES, SEE SHEETS SF201 AND SF202 FOR DETAILS
- 1.0> TOP OF WALL LEANING DISTANCE TOWARD CHANNEL IN INCHES, SEE SHEETS SL101 TO SL207 FOR CONCRETE LINING

PHOTO LEGEND:

- [A1] WALL "A" ELEVATION PHOTO IDENTIFICATION SEE FLATTEN VIEW FOR PHOTO LOCATION
- [B1] WALL "B" ELEVATION PHOTO IDENTIFICATION SEE FLATTEN VIEW FOR PHOTO LOCATION
- [F1] CHANNEL FLOOR PHOTO IDENTIFICATION SEE FLOOR PLAN VIEW FOR PHOTO LOCATION

B1



B2

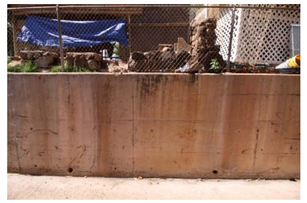

B3



F1



F2



F3



A1



A2



A3



### SPALL REPAIR CHART

| MARK | LOCATION | REPAIR TYPE | SPALL DIMENSION L | W | D | SPALL VOLUME | SPALL CENTER COORDINATE X | Y OR Z | RATING |
|---|---|---|---|---|---|---|---|---|---|
| "SP-1" | WALL "A" | [*] | 50 | 21 | 3 | 3150 | 20 | 5 | 7 |
| "SP-2" | WALL "A" | [*] | 132 | 12 | 4 | 6336 | 22 | 6.5 | 6 |
| "SP-3" | WALL "A" | [*] | 132 | 12 | 3 | 4752 | 44 | 6.5 | 6 |
| "SP-4" | WALL "A" | [*] | 24 | 12 | 2 | 576 | 58 | 6.5 | 7 |
| "SP-5" | WALL "A" | [*] | 18 | 43 | 2 | 1548 | 60.5 | 2.5 | 7 |
| "SP-6" | WALL "A" | [*] | 32 | 24 | 2 | 1536 | 69 | 2 | 7 |
| "SP-7" | WALL "B" | [*] | 48 | 8 | 3 | 1152 | 6.5 | 6.5 | 7 |
| "SP-8" | WALL "B" | [*] | 32 | 32 | 2 | 2048 | 38 | 3 | 7 |
| "SP-9" | WALL "B" | [*] | 51 | 54 | 2 | 5508 | 69 | 3 | 7 |
| "SP-10" | WALL "B" | [*] | 132 | 12 | 3 | 4752 | 69 | 6.5 | 7 |
| "SP-11" | WALL "B" | [*] | 30 | 8 | 2 | 480 | 86 | 6.5 | 7 |
| "SP-12" | WALL "B" | [*] | 24 | 36 | 2 | 1728 | 88 | 2 | 7 |
| "SP-13" | WALL "B" | [*] | 12 | 36 | 6 | 2592 | 98.5 | 4 | 6 |

### CHAINLINK FENCE REPAIR CHART

| MARK | LOCATION | REPAIR TYPE | POSTS | TOP RAIL | BOTTOM WIRE | BRACE | FABRIC |
|---|---|---|---|---|---|---|---|
| "CF-1" | WALL "A" | (E) | - | - | | - | DAMAGED 5'x4' |
| "CF-2" | WALL "B" | (E) | - | - | | - | DAMAGED 20'x4' |
| "CF-3" | WALL "B" | (D) | - | - | DAMAGED 50' | - | - |

### CRACK REPAIR CHART

| MARK | LOCATION | REPAIR TYPE | GENERAL CRACKS (LF) | MAJOR CRACKS WIDTH (IN) | LENGTH (FT) | START PNT X | START PNT Y,Z | END PNT X | END PNT Y,Z | RATING |
|---|---|---|---|---|---|---|---|---|---|---|
| "GC-1" | WALL "A" | [*] | 50 | - | - | - | - | - | - | 8 |
| "GC-2" | FLOOR | [*] | 95 | - | - | - | - | - | - | 8 |
| "GC-3" | WALL "B" | [*] | 70 | - | - | - | - | - | - | 8 |

NOTES:

1- CONCRETE LINING IS PROVIDED IN THIS SEGMENT SEE SHEET SL204

2- THERE IS NO SPALL AND CRACK REPAIRS IN THIS SEGMENT

GRAPHIC SCALES:

0 1' 2' 4' 8' 12' 16'

3/16"=1'-0"

| REVISION NO. | DATE | REVISIONS | BY |
|---|---|---|---|

ATHER R. DAR
LICENSED PROFESSIONAL ENGINEER
No. 7808-S
HAWAII U.S.A.
Exp. Date: 4-30-20

THIS WORK WAS PREPARED BY ME OR UNDER MY SUPERVISION AND CONSTRUCTION OF THIS PROJECT WILL BE UNDER MY OBSERVATION

DEPARTMENT OF HAWAIIAN HOMELAND

# NANAKULI FLOOD CONTROL CHANNEL IMPROVEMENTS NANAKULI VALLEY, OAHU HAWAII

CHANNEL SEGMENT [155] REPAIR DETAILS - 1ST HALF

| | |
|---|---|
| DESIGNED BY: | TTP |
| DRAWN BY: | AK, AP, DL |
| CHECKED BY: | AD |
| SUPV: | |
| DATE: | 03/05/2019 |

HAWAII ENGINEERING GROUP, Inc.
Civil & Structural Engineers
1088 BISHOP STREET #2506
HONOLULU, HI 96813
Tel: 808-533-2092

JOB NO.

SHEET C155A
170OF 225 SHTS

FILE ___ DRAWER ___ ___ FOLDER ___ ___

Plot date: 15-Apr-2020
Full Size Plot

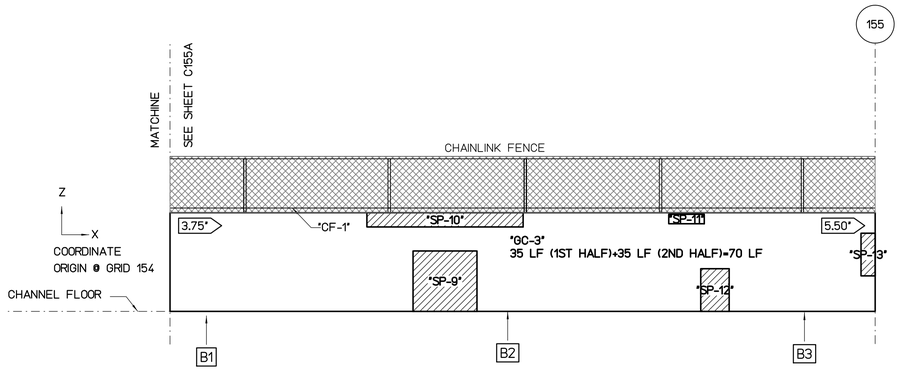


## WALL "B" FLATTEN VIEW

SCALE : 3/16" = 1'-0"

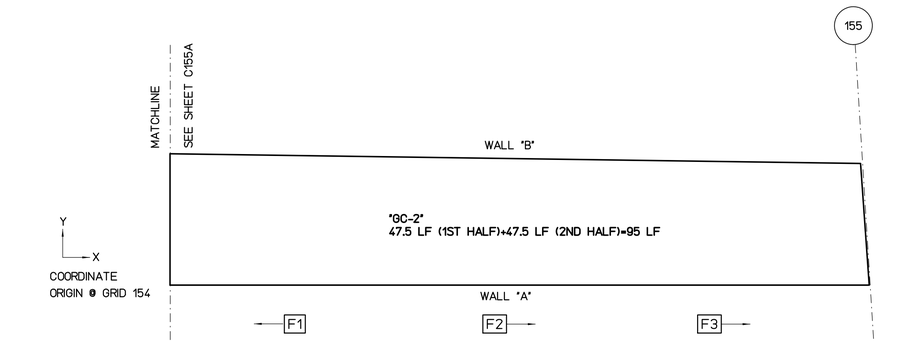


## FLOOR PLAN VIEW

SCALE : 3/16" = 1'-0"

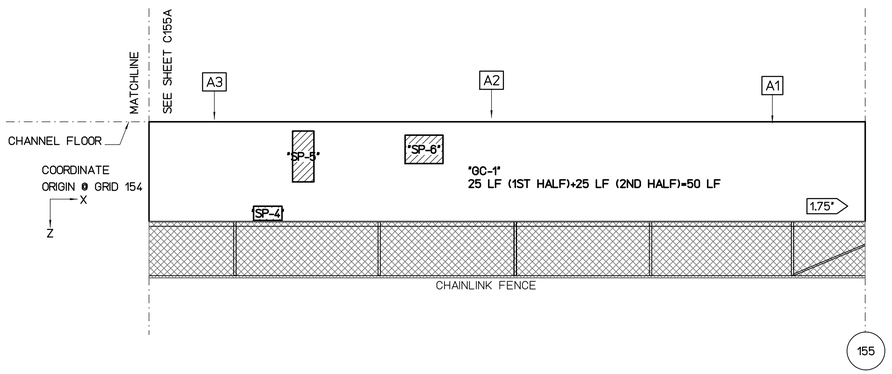


## WALL "A" FLATTEN VIEW

SCALE : 3/16" = 1'-0"

REPAIR LEGEND AND NOTES:

- 2 — CRACK AND SPALL REPAIR TYPES, SEE SHEETS SR201 AND SR202 FOR DETAILS. TYPE [*] INDICATES NO-REPAIR
- (A) — CHAINLINK FENCE REPAIR TYPES, SEE SHEETS SF201 AND SF202 FOR DETAILS
- 1.0 — TOP OF WALL LEANING DISTANCE TOWARD CHANNEL IN INCHES, SEE SHEETS SL101 TO SL207 FOR CONCRETE LINING

PHOTO LEGEND:

- A1 — WALL "A" ELEVATION PHOTO IDENTIFICATION SEE FLATTEN VIEW FOR PHOTO LOCATION
- B1 — WALL "B" ELEVATION PHOTO IDENTIFICATION SEE FLATTEN VIEW FOR PHOTO LOCATION
- F1 — CHANNEL FLOOR PHOTO IDENTIFICATION SEE FLOOR PLAN VIEW FOR PHOTO LOCATION

B1



B2



B3



F1



F2



F3



A1



A2



A3



### SPALL REPAIR CHART

| MARK | LOCATION | REPAIR TYPE | SPALL DIMENSION L | SPALL DIMENSION W | SPALL DIMENSION D | SPALL VOLUME | SPALL CENTER COORDINATE X | SPALL CENTER COORDINATE Y OR Z | RATING |
|---|---|---|---|---|---|---|---|---|---|
| "SP-1" | WALL "A" | [*] | 50 | 21 | 3 | 3150 | 20 | 5 | 7 |
| "SP-2" | WALL "A" | [*] | 132 | 12 | 4 | 6336 | 22 | 6.5 | 6 |
| "SP-3" | WALL "A" | [*] | 132 | 12 | 3 | 4752 | 44 | 6.5 | 6 |
| "SP-4" | WALL "A" | [*] | 24 | 12 | 2 | 576 | 58 | 6.5 | 7 |
| "SP-5" | WALL "A" | [*] | 18 | 43 | 2 | 1548 | 60.5 | 2.5 | 7 |
| "SP-6" | WALL "A" | [*] | 32 | 24 | 2 | 1536 | 69 | 2 | 7 |
| "SP-7" | WALL "B" | [*] | 48 | 8 | 3 | 1152 | 6.5 | 6.5 | 7 |
| "SP-8" | WALL "B" | [*] | 32 | 32 | 2 | 2048 | 38 | 3 | 7 |
| "SP-9" | WALL "B" | [*] | 54 | 51 | 2 | 5508 | 69 | 3 | 7 |
| "SP-10" | WALL "B" | [*] | 132 | 12 | 3 | 4752 | 69 | 6.5 | 7 |
| "SP-11" | WALL "B" | [*] | 30 | 8 | 2 | 480 | 86 | 6.5 | 7 |
| "SP-12" | WALL "B" | [*] | 24 | 36 | 2 | 1728 | 88 | 2 | 7 |
| "SP-13" | WALL "B" | [*] | 12 | 36 | 6 | 2592 | 98.5 | 4 | 6 |

### CHAINLINK FENCE REPAIR CHART

| MARK | LOCATION | REPAIR TYPE | POSTS | TOP RAIL | BOTTOM WIRE | BRACE | FABRIC |
|---|---|---|---|---|---|---|---|
| "CF-1" | WALL "B" | (D) | - | - | DAMAGED 50' | - | - |

### CRACK REPAIR CHART

| MARK | LOCATION | REPAIR TYPE | GENERAL CRACKS (LF) | MAJOR CRACKS WIDTH (IN) | MAJOR CRACKS LENGTH (FT) | MAJOR CRACKS START PNT X | MAJOR CRACKS START PNT Y,Z | MAJOR CRACKS END PNT X | MAJOR CRACKS END PNT Y,Z | RATING |
|---|---|---|---|---|---|---|---|---|---|---|
| "GC-1" | WALL "A" | [*] | 50 | - | - | - | - | - | - | 8 |
| "GC-2" | FLOOR | [*] | 95 | - | - | - | - | - | - | 8 |
| "GC-3" | WALL "B" | [*] | 70 | - | - | - | - | - | - | 8 |

NOTES:

1- CONCRETE LINING IS PROVIDED IN THIS SEGMENT SEE SHEET SL204

2- THERE IS NO SPALL AND CRACK REPAIRS IN THIS SEGMENT

GRAPHIC SCALES:

0 1' 2' 4' 8' 12' 16'

3/16"=1'-0"

| REVISION NO. | DATE | REVISIONS | BY |
|---|---|---|---|

ARTHER R DAR
LICENSED PROFESSIONAL ENGINEER
No. 7808-S
HAWAII U.S.A.

Exp. Date: 4-30-20

THIS WORK WAS PREPARED BY ME OR UNDER MY SUPERVISION AND CONSTRUCTION OF THIS PROJECT WILL BE UNDER MY OBSERVATION

DEPARTMENT OF HAWAIIAN HOMELAND

# NANAKULI FLOOD CONTROL CHANNEL IMPROVEMENTS NANAKULI VALLEY, OAHU HAWAII

CHANNEL SEGMENT 155 REPAIR DETAILS - 2ND HALF

DESIGNED BY: TTP
DRAWN BY: AK, AP, DL
CHECKED BY: AD
SUPV:
DATE: 03/05/2019

HAWAII ENGINEERING GROUP, Inc.
Civil & Structural Engineers
1088 BISHOP STREET #2506
HONOLULU, HI 96813
Tel: 808-533-2092

JOB NO.

SHEET C155B
171 OF 225 SHTS

FILE ___ DRAWER ___ ___ FOLDER ___ ___

Plot date: 15-Apr-2020
Full Size Plot

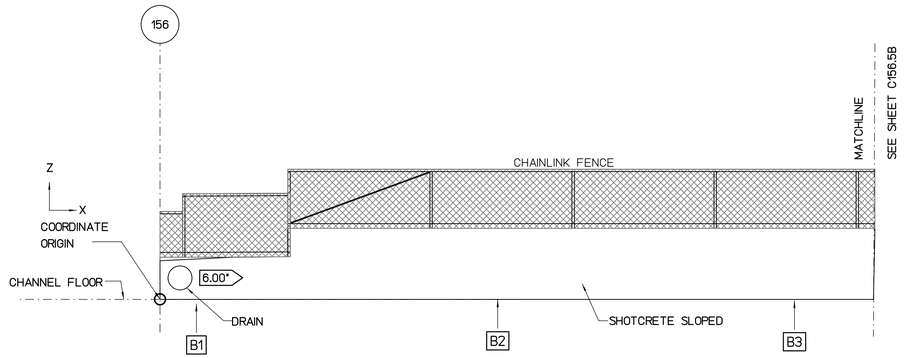


## WALL "B" FLATTEN VIEW

SCALE : 3/16" = 1'-0"

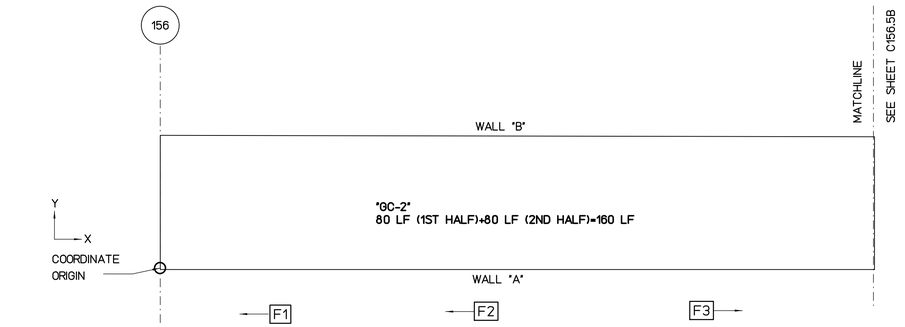


## FLOOR PLAN VIEW

SCALE : 3/16" = 1'-0"

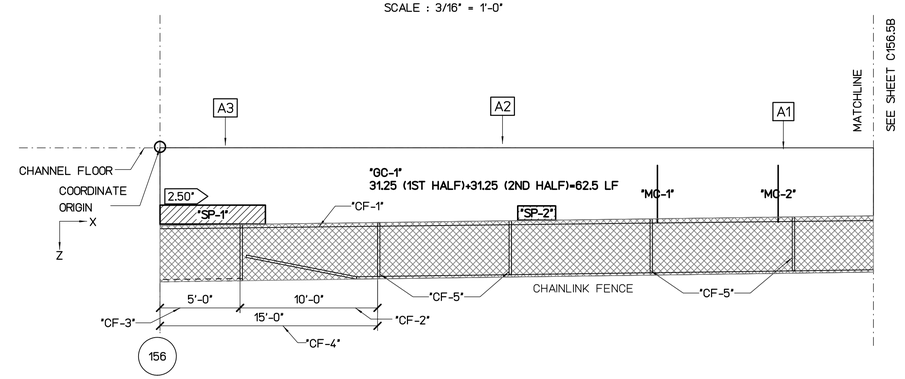


## WALL "A" FLATTEN VIEW

SCALE : 3/16" = 1'-0"

REPAIR LEGEND AND NOTES:

- [2] CRACK AND SPALL REPAIR TYPES, SEE SHEETS SR201 AND SR202 FOR DETAILS. TYPE [*] INDICATES NO-REPAIR
- (A) CHAINLINK FENCE REPAIR TYPES, SEE SHEETS SF201 AND SF202 FOR DETAILS
- 1.0> TOP OF WALL LEANING DISTANCE TOWARD CHANNEL IN INCHES, SEE SHEETS SL101 TO SL207 FOR CONCRETE LINING

PHOTO LEGEND:

- [A1] WALL "A" ELEVATION PHOTO IDENTIFICATION SEE FLATTEN VIEW FOR PHOTO LOCATION
- [B1] WALL "B" ELEVATION PHOTO IDENTIFICATION SEE FLATTEN VIEW FOR PHOTO LOCATION
- [F1] CHANNEL FLOOR PHOTO IDENTIFICATION SEE FLOOR PLAN VIEW FOR PHOTO LOCATION

B1



B2



B3



F1



F2



F3



A1



A2



A3



### SPALL REPAIR CHART

| MARK | LOCATION | REPAIR TYPE | SPALL DIMENSION L | SPALL DIMENSION W | SPALL DIMENSION D | SPALL VOLUME | SPALL CENTER COORDINATE X | SPALL CENTER COORDINATE Y OR Z | RATING |
|---|---|---|---|---|---|---|---|---|---|
| "SP-1" | WALL "A" | [*] | 89 | 16 | 3 | 4272 | 3.5 | 5 | 7 |
| "SP-2" | WALL "A" | [*] | 32 | 12 | 3 | 1152 | 26.5 | 5 | 7 |
| "SP-3" | WALL "A" | [*] | 14 | 9 | 2 | 252 | 52 | 5 | 7 |
| "SP-4" | WALL "A" | [*] | 10 | 14 | 2 | 280 | 55 | 5 | 7 |
| "SP-5" | WALL "A" | [*] | 10 | 14 | 2 | 280 | 56.5 | 5 | 7 |
| "SP-6" | WALL "A" | [*] | 28 | 10 | 2 | 560 | 62.5 | 5 | 7 |
| "SP-7" | WALL "A" | [*] | 16 | 11 | 2 | 352 | 83.5 | 5 | 7 |
| "SP-8" | WALL "A" | [*] | 40 | 36 | 3 | 1560 | 89 | 4.5 | 7 |
| "SP-9" | WALL "A" | [*] | 40 | 36 | 3 | 1080 | 90.5 | 3.5 | 7 |
| "SP-10" | WALL "A" | [*] | 13 | 7 | 3 | 273 | 92.5 | 5 | 7 |
| "SP-11" | WALL "A" | [*] | 14 | 9 | 2 | 252 | 95.5 | 5 | 7 |

### CHAINLINK FENCE REPAIR CHART

| MARK | LOCATION | REPAIR TYPE | POSTS | TOP RAIL | BOTTOM WIRE | BRACE | FABRIC |
|---|---|---|---|---|---|---|---|
| "CF-1" | WALL "A" | (D) | - | - | DAMAGED 50' | - | - |
| "CF-2" | WALL "A" | (C) | - | DAMAGED 10' | - | - | - |
| "CF-3" | WALL "A" | (C) | - | MISSING 5' | - | - | - |
| "CF-4" | WALL "A" | (E) | - | - | - | - | DAMAGED 15'x4' |
| "CF-5" | WALL "A" | (A) | BENT 4 | - | - | - | - |

### CRACK REPAIR CHART

| MARK | LOCATION | REPAIR TYPE | GENERAL CRACKS (LF) | MAJOR CRACKS WIDTH (IN) | MAJOR CRACKS LENGTH (FT) | MAJOR CRACKS START PNT X | MAJOR CRACKS START PNT Y,Z | MAJOR CRACKS END PNT X | MAJOR CRACKS END PNT Y,Z | RATING |
|---|---|---|---|---|---|---|---|---|---|---|
| "MC-1" | WALL "A" | [*] | - | 0.06 | 5 | 35 | 1.5 | 35 | 5.5 | 7 |
| "MC-2" | WALL "A" | [*] | - | 0.06 | 5 | 43.5 | 1.5 | 43.5 | 5.5 | 7 |
| "MC-3" | WALL "A" | [*] | - | 0.06 | 5 | 75 | 1.5 | 75 | 5.5 | 7 |
| "GC-1" | WALL "A" | [*] | 62.5 | - | - | - | - | - | - | 8 |
| "GC-2" | FLOOR | [*] | 160 | - | - | - | - | - | - | 8 |

NOTES:

1- CONCRETE LINING IS PROVIDED IN THIS SEGMENT SEE SHEET SL204

2- THERE IS NO SPALL AND CRACK REPAIRS IN THIS SEGMENT

GRAPHIC SCALES:

0 1' 2' 4' 8' 12' 16'

3/16"=1'-0"

| REVISION NO. | DATE | REVISIONS | BY |
|---|---|---|---|

ARTHER R. DAR
LICENSED PROFESSIONAL ENGINEER
No. 7808-S
HAWAII U.S.A.
Exp. Date: 4-30-20

THIS WORK WAS PREPARED BY ME OR UNDER MY SUPERVISION AND CONSTRUCTION OF THIS PROJECT WILL BE UNDER MY OBSERVATION

DEPARTMENT OF HAWAIIAN HOMELAND

# NANAKULI FLOOD CONTROL CHANNEL IMPROVEMENTS NANAKULI VALLEY, OAHU HAWAII

CHANNEL SEGMENT 156.5 REPAIR DETAILS - 1ST HALF

| | |
|---|---|
| DESIGNED BY: | TTP |
| DRAWN BY: | AK, AP, DL |
| CHECKED BY: | AD |
| SUPV: | |
| DATE: | 03/05/2019 |

HAWAII ENGINEERING GROUP, Inc.
Civil & Structural Engineers
1088 BISHOP STREET #2506
HONOLULU, HI 96813
Tel: 808-533-2092

JOB NO.

SHEET C156.5A

174 OF 225 SHTS

FILE ___ DRAWER ___ ___ FOLDER ___ ___

Plot date: 15-Apr-2020
Full Size Plot

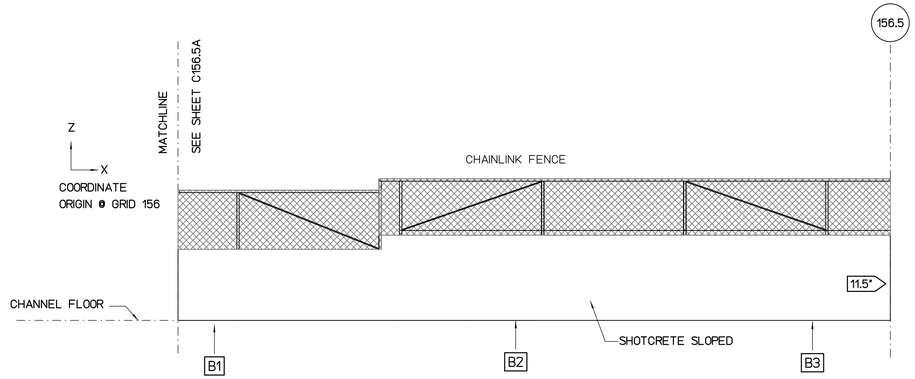


## WALL "B" FLATTEN VIEW

SCALE : 3/16" = 1'-0"

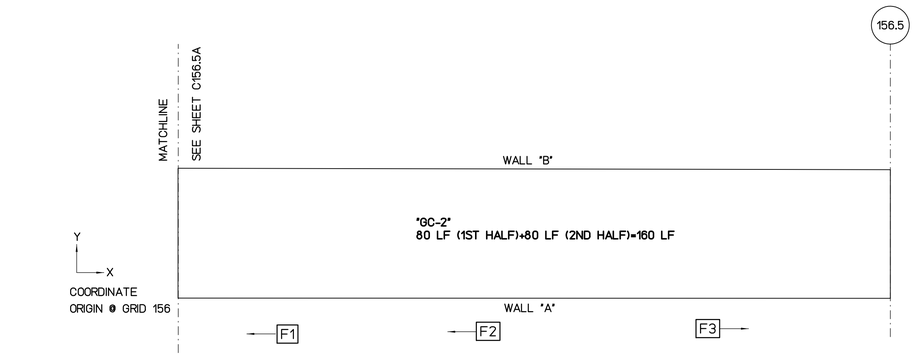


## FLOOR PLAN VIEW

SCALE : 3/16" = 1'-0"

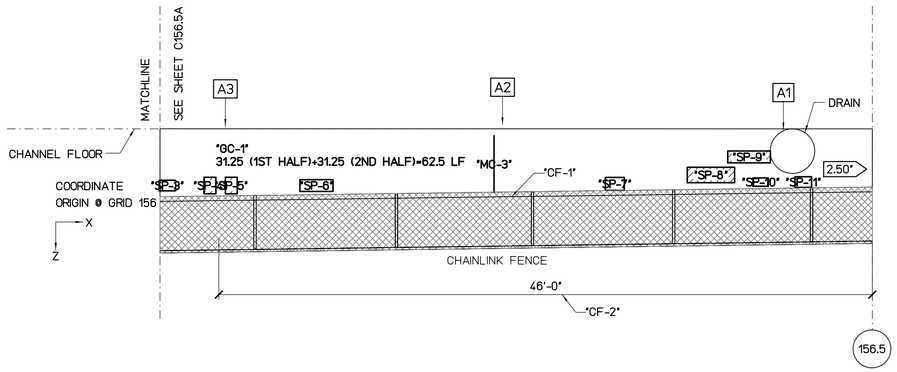


## WALL "A" FLATTEN VIEW

SCALE : 3/16" = 1'-0"

REPAIR LEGEND AND NOTES:

- 2 — CRACK AND SPALL REPAIR TYPES, SEE SHEETS SR201 AND SR202 FOR DETAILS. TYPE [*] INDICATES NO-REPAIR
- (A) — CHAINLINK FENCE REPAIR TYPES, SEE SHEETS SF201 AND SF202 FOR DETAILS
- 1.0 — TOP OF WALL LEANING DISTANCE TOWARD CHANNEL IN INCHES, SEE SHEETS SL101 TO SL207 FOR CONCRETE LINING

PHOTO LEGEND:

- A1 — WALL "A" ELEVATION PHOTO IDENTIFICATION SEE FLATTEN VIEW FOR PHOTO LOCATION
- B1 — WALL "B" ELEVATION PHOTO IDENTIFICATION SEE FLATTEN VIEW FOR PHOTO LOCATION
- F1 — CHANNEL FLOOR PHOTO IDENTIFICATION SEE FLOOR PLAN VIEW FOR PHOTO LOCATION

B1



B2



B3



F1



F2



F3



A1



A2



A3



### SPALL REPAIR CHART

| MARK | LOCATION | REPAIR TYPE | SPALL DIMENSION L | SPALL DIMENSION W | SPALL DIMENSION D | SPALL VOLUME | SPALL CENTER COORDINATE X | SPALL CENTER COORDINATE Y OR Z | RATING |
|---|---|---|---|---|---|---|---|---|---|
| "SP-1" | WALL "A" | [*] | 89 | 16 | 3 | 4272 | 3.5 | 5 | 7 |
| "SP-2" | WALL "A" | [*] | 32 | 12 | 3 | 1152 | 26.5 | 5 | 7 |
| "SP-3" | WALL "A" | [*] | 14 | 9 | 2 | 252 | 52 | 5 | 7 |
| "SP-4" | WALL "A" | [*] | 10 | 14 | 2 | 280 | 55 | 5 | 7 |
| "SP-5" | WALL "A" | [*] | 10 | 14 | 2 | 280 | 56.5 | 5 | 7 |
| "SP-6" | WALL "A" | [*] | 28 | 10 | 2 | 560 | 62.5 | 5 | 7 |
| "SP-7" | WALL "A" | [*] | 16 | 11 | 2 | 352 | 83.5 | 5 | 7 |
| "SP-8" | WALL "A" | [*] | 40 | 13 | 3 | 1560 | 89 | 4.5 | 7 |
| "SP-9" | WALL "A" | [*] | 36 | 10 | 3 | 1080 | 90.5 | 3.5 | 7 |
| "SP-10" | WALL "A" | [*] | 13 | 7 | 3 | 273 | 92.5 | 5 | 7 |
| "SP-11" | WALL "A" | [*] | 14 | 9 | 2 | 252 | 95.5 | 5 | 7 |

### CHAINLINK FENCE REPAIR CHART

| MARK | LOCATION | REPAIR TYPE | POSTS | TOP RAIL | BOTTOM WIRE | BRACE | FABRIC |
|---|---|---|---|---|---|---|---|
| "CF-1" | WALL "A" | (D) | - | - | DAMAGED 50' | - | - |
| "CF-2" | WALL "A" | (E) | - | - | - | - | DAMAGED 46'x4' |

### CRACK REPAIR CHART

| MARK | LOCATION | REPAIR TYPE | GENERAL CRACKS (LF) | MAJOR CRACKS WIDTH (IN) | MAJOR CRACKS LENGTH (FT) | MAJOR CRACKS START PNT X | MAJOR CRACKS START PNT Y,Z | MAJOR CRACKS END PNT X | MAJOR CRACKS END PNT Y,Z | RATING |
|---|---|---|---|---|---|---|---|---|---|---|
| "MC-1" | WALL "A" | [*] | - | 0.06 | 5 | 35 | 1.5 | 35 | 5.5 | 7 |
| "MC-2" | WALL "A" | [*] | - | 0.06 | 5 | 43.5 | 1.5 | 43.5 | 5.5 | 7 |
| "MC-3" | WALL "A" | [*] | - | 0.06 | 5 | 75 | 1.5 | 75 | 5.5 | 7 |
| "GC-1" | WALL "A" | [*] | 62.5 | - | - | - | - | - | - | 8 |
| "GC-2" | FLOOR | [*] | 160 | - | - | - | - | - | - | 8 |

NOTES:

1- CONCRETE LINING IS PROVIDED IN THIS SEGMENT SEE SHEET SL204

2- THERE IS NO SPALL AND CRACK REPAIRS IN THIS SEGMENT

GRAPHIC SCALES:

0 1' 2' 4' 8' 12' 16'

3/16"=1'-0"

| REVISION NO. | DATE | REVISIONS | BY |
|---|---|---|---|

ATHER R. DAR
LICENSED PROFESSIONAL ENGINEER
No. 7808-S
HAWAII U.S.A.

Exp. Date: 4-30-20

THIS WORK WAS PREPARED BY ME OR UNDER MY SUPERVISION AND CONSTRUCTION OF THIS PROJECT WILL BE UNDER MY OBSERVATION

DEPARTMENT OF HAWAIIAN HOMELAND

# NANAKULI FLOOD CONTROL CHANNEL IMPROVEMENTS NANAKULI VALLEY, OAHU HAWAII

CHANNEL SEGMENT 156.5 REPAIR DETAILS - 2ND HALF

| | |
|---|---|
| DESIGNED BY: | TTP |
| DRAWN BY: | AK, AP, DL |
| CHECKED BY: | AD |
| SUPV: | |
| DATE: | 03/05/2019 |

HAWAII ENGINEERING GROUP, Inc.
Civil & Structural Engineers
1088 BISHOP STREET #2506
HONOLULU, HI 96813
Tel: 808-533-2092

JOB NO.

SHEET C156.5B

175 OF 225 SHTS

FILE ___ DRAWER ___ ___ FOLDER ___ ___

Plot date: 15-Apr-2020
Full Size Plot

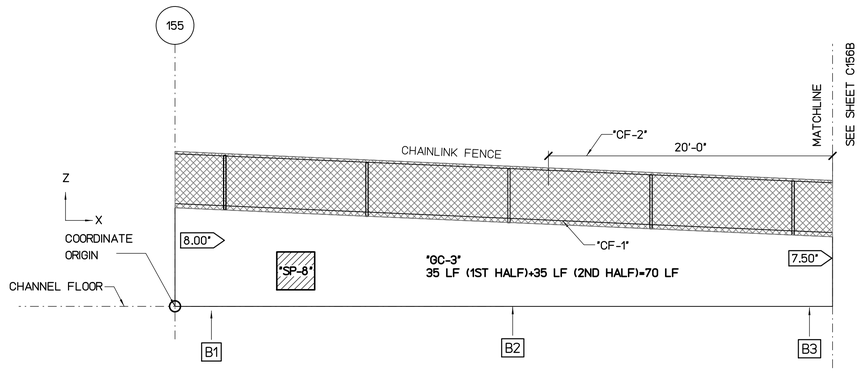


## WALL "B" FLATTEN VIEW

SCALE : 3/16" = 1'-0"

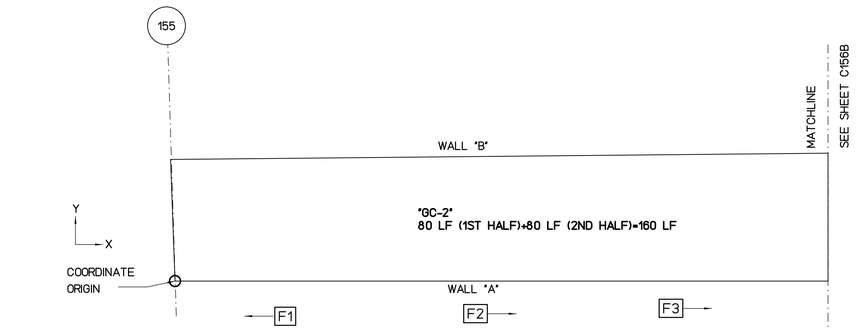


## FLOOR PLAN VIEW

SCALE : 3/16" = 1'-0"

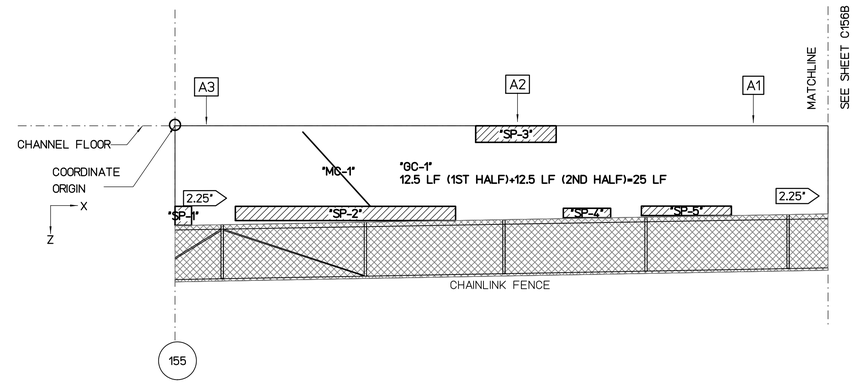


## WALL "A" FLATTEN VIEW

SCALE : 3/16" = 1'-0"

REPAIR LEGEND AND NOTES:

- [2] CRACK AND SPALL REPAIR TYPES, SEE SHEETS SR201 AND SR202 FOR DETAILS. TYPE [*] INDICATES NO-REPAIR
- (A) CHAINLINK FENCE REPAIR TYPES, SEE SHEETS SF201 AND SF202 FOR DETAILS
- <1.0> TOP OF WALL LEANING DISTANCE TOWARD CHANNEL IN INCHES, SEE SHEETS SL101 TO SL207 FOR CONCRETE LINING

PHOTO LEGEND:

- [A1] WALL "A" ELEVATION PHOTO IDENTIFICATION SEE FLATTEN VIEW FOR PHOTO LOCATION
- [B1] WALL "B" ELEVATION PHOTO IDENTIFICATION SEE FLATTEN VIEW FOR PHOTO LOCATION
- [F1] CHANNEL FLOOR PHOTO IDENTIFICATION SEE FLOOR PLAN VIEW FOR PHOTO LOCATION

B1



B2



B3



F1



F2



F3



A1



A2



A3



### SPALL REPAIR CHART

| MARK | LOCATION | REPAIR TYPE | SPALL DIMENSION L | SPALL DIMENSION W | SPALL DIMENSION D | SPALL VOLUME | SPALL CENTER COORDINATE X | SPALL CENTER COORDINATE Y OR Z | RATING |
|---|---|---|---|---|---|---|---|---|---|
| "SP-1" | WALL "A" | [*] | 14 | 16 | 2 | 448 | 0.6 | 6.4 | 7 |
| "SP-2" | WALL "A" | [*] | 186 | 12 | 4 | 8928 | 12 | 6.2 | 6 |
| "SP-3" | WALL "A" | [*] | 68 | 14 | 4 | 3808 | 24 | 0.6 | 6 |
| "SP-4" | WALL "A" | [*] | 40 | 8 | 3 | 960 | 29 | 6.2 | 7 |
| "SP-5" | WALL "A" | [*] | 76 | 8 | 3 | 1824 | 36 | 6 | 7 |
| "SP-6" | WALL "A" | [*] | 34 | 9 | 3 | 918 | 47 | 6.5 | 7 |
| "SP-7" | WALL "A" | [*] | 312 | 12 | 4 | 14976 | 77 | 5.5 | 6 |
| "SP-8" | WALL "B" | [*] | 32 | 32 | 3 | 3072 | 8.5 | 2.5 | 7 |
| "SP-9" | WALL "B" | [*] | 336 | 24 | 4 | 32256 | 65 | 6.5 | 6 |
| "SP-10" | WALL "B" | [*] | 43 | 10 | 3 | 1290 | 79.5 | 0.5 | 7 |
| "SP-11" | WALL "B" | [*] | 26 | 9 | 3 | 702 | 88 | 0.5 | 7 |
| "SP-12" | WALL "B" | [*] | 48 | 36 | 6 | 10368 | 92 | 4.5 | 5 |

### CHAINLINK FENCE REPAIR CHART

| MARK | LOCATION | REPAIR TYPE | POSTS | TOP RAIL | BOTTOM WIRE | BRACE | FABRIC |
|---|---|---|---|---|---|---|---|
| "CF-1" | WALL "B" | (D) | - | - | DAMAGED 46' | - | - |
| "CF-2" | WALL "B" | (E) | - | - | - | - | DAMAGED 20'x4' |

### CRACK REPAIR CHART

| MARK | LOCATION | REPAIR TYPE | GENERAL CRACKS (LF) | MAJOR CRACKS WIDTH (IN) | MAJOR CRACKS LENGTH (FT) | MAJOR CRACKS START PNT X | MAJOR CRACKS START PNT Y,Z | MAJOR CRACKS END PNT X | MAJOR CRACKS END PNT Y,Z | RATING |
|---|---|---|---|---|---|---|---|---|---|---|
| "MC-1" | WALL "A" | [*] | - | 0.19 | 7 | 9 | 0.5 | 14 | 6 | 7 |
| "GC-1" | WALL "A" | [*] | 25 | - | - | - | - | - | - | 8 |
| "GC-2" | FLOOR | [*] | 160 | - | - | - | - | - | - | 8 |
| "GC-3" | WALL "B" | [*] | 70 | - | - | - | - | - | - | 8 |

NOTES:

1- CONCRETE LINING IS PROVIDED IN THIS SEGMENT SEE SHEET SL204

2- THERE IS NO SPALL AND CRACK REPAIRS IN THIS SEGMENT

GRAPHIC SCALES:

0 1' 2' 4' 8' 12' 16'

3/16"=1'-0"

| REVISION NO. | DATE | REVISIONS | BY |
|---|---|---|---|

ATHER R. DAR
LICENSED PROFESSIONAL ENGINEER
No. 7808-S
HAWAII U.S.A.

Exp. Date: 4-30-20

THIS WORK WAS PREPARED BY ME OR UNDER MY SUPERVISION AND CONSTRUCTION OF THIS PROJECT WILL BE UNDER MY OBSERVATION

DEPARTMENT OF HAWAIIAN HOMELAND

# NANAKULI FLOOD CONTROL CHANNEL IMPROVEMENTS NANAKULI VALLEY, OAHU HAWAII

## CHANNEL SEGMENT [156] REPAIR DETAILS - 1ST HALF

| | |
|---|---|
| DESIGNED BY: | TTP |
| DRAWN BY: | AK, AP, DL |
| CHECKED BY: | AD |
| SUPV: | |
| DATE: | 03/05/2019 |

HAWAII ENGINEERING GROUP, Inc.
Civil & Structural Engineers
1088 BISHOP STREET #2506
HONOLULU, HI 96813
Tel: 808-533-2092

JOB NO.

SHEET C156A

172 OF 225 SHTS

FILE ___ DRAWER ___ ___ FOLDER ___ ___

Plot date: 15-Apr-2020
Full Size Plot

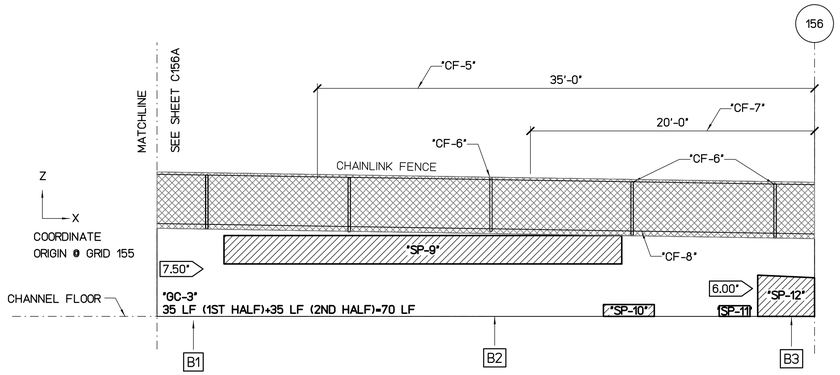


## WALL "B" FLATTEN VIEW

SCALE : 3/16" = 1'-0"

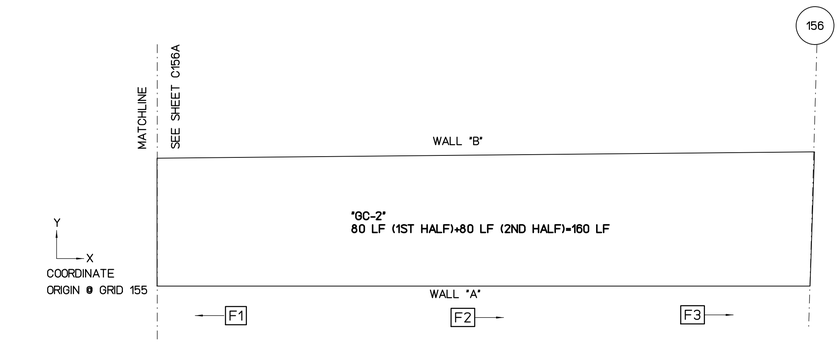


## FLOOR PLAN VIEW

SCALE : 3/16" = 1'-0"

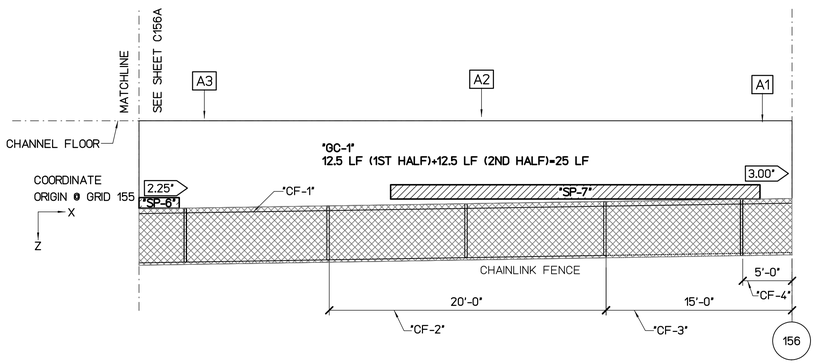


## WALL "A" FLATTEN VIEW

SCALE : 3/16" = 1'-0"

REPAIR LEGEND AND NOTES:

- 2 — CRACK AND SPALL REPAIR TYPES, SEE SHEETS SR201 AND SR202 FOR DETAILS. TYPE ⊠ INDICATES NO-REPAIR
- Ⓐ — CHAINLINK FENCE REPAIR TYPES, SEE SHEETS SF201 AND SF202 FOR DETAILS
- 1.0 — TOP OF WALL LEANING DISTANCE TOWARD CHANNEL IN INCHES, SEE SHEETS SL101 TO SL207 FOR CONCRETE LINING

PHOTO LEGEND:

- A1 — WALL "A" ELEVATION PHOTO IDENTIFICATION SEE FLATTEN VIEW FOR PHOTO LOCATION
- B1 — WALL "B" ELEVATION PHOTO IDENTIFICATION SEE FLATTEN VIEW FOR PHOTO LOCATION
- F1 — CHANNEL FLOOR PHOTO IDENTIFICATION SEE FLOOR PLAN VIEW FOR PHOTO LOCATION

B1



B2



B3



F1



F2



F3



A1



A2



A3



### SPALL REPAIR CHART

| MARK | LOCATION | REPAIR TYPE | SPALL DIMENSION L | SPALL DIMENSION W | SPALL DIMENSION D | SPALL VOLUME | SPALL CENTER COORDINATE X | SPALL CENTER COORDINATE Y OR Z | RATING |
|---|---|---|---|---|---|---|---|---|---|
| "SP-1" | WALL "A" | ⊠ | 14 | 16 | 2 | 448 | 0.6 | 6.4 | 7 |
| "SP-2" | WALL "A" | ⊠ | 186 | 12 | 4 | 8928 | 12 | 6.2 | 6 |
| "SP-3" | WALL "A" | ⊠ | 68 | 14 | 4 | 3808 | 24 | 0.6 | 6 |
| "SP-4" | WALL "A" | ⊠ | 40 | 8 | 3 | 960 | 29 | 6.2 | 7 |
| "SP-5" | WALL "A" | ⊠ | 76 | 8 | 3 | 1824 | 36 | 6 | 7 |
| "SP-6" | WALL "A" | ⊠ | 34 | 9 | 3 | 918 | 47 | 6.5 | 7 |
| "SP-7" | WALL "A" | ⊠ | 312 | 12 | 4 | 14976 | 77 | 5.5 | 6 |
| "SP-8" | WALL "B" | ⊠ | 32 | 32 | 3 | 3072 | 8.5 | 2.5 | 7 |
| "SP-9" | WALL "B" | ⊠ | 336 | 24 | 4 | 32256 | 65 | 6.5 | 6 |
| "SP-10" | WALL "B" | ⊠ | 43 | 10 | 3 | 1290 | 79.5 | 0.5 | 7 |
| "SP-11" | WALL "B" | ⊠ | 26 | 9 | 3 | 702 | 88 | 0.5 | 7 |
| "SP-12" | WALL "B" | ⊠ | 48 | 36 | 6 | 10368 | 92 | 4.5 | 5 |

### CHAINLINK FENCE REPAIR CHART

| MARK | LOCATION | REPAIR TYPE | POSTS | TOP RAIL | BOTTOM WIRE | BRACE | FABRIC |
|---|---|---|---|---|---|---|---|
| "CF-1" | WALL "A" | Ⓓ | - | - | DAMAGED 46' | - | - |
| "CF-2" | WALL "A" | Ⓔ | - | - | - | - | DAMAGED 20'x4' |
| "CF-3" | WALL "A" | Ⓒ | - | MISSING 15' | - | - | - |
| "CF-4" | WALL "A" | Ⓔ | - | - | - | - | DAMAGED 5'x4' |
| "CF-5" | WALL "B" | Ⓔ | - | - | - | - | DAMAGED 35'x4' |
| "CF-6" | WALL "B" | Ⓐ | DAMAGED 3 | - | - | - | - |
| "CF-7" | WALL "B" | Ⓒ | - | DAMAGED 20' | - | - | - |
| "CF-8" | WALL "B" | Ⓓ | - | - | DAMAGED 46' | - | - |

### CRACK REPAIR CHART

| MARK | LOCATION | REPAIR TYPE | GENERAL CRACKS (LF) | MAJOR CRACKS WIDTH (IN) | MAJOR CRACKS LENGTH (FT) | MAJOR CRACKS START PNT X | MAJOR CRACKS START PNT Y,Z | MAJOR CRACKS END PNT X | MAJOR CRACKS END PNT Y,Z | RATING |
|---|---|---|---|---|---|---|---|---|---|---|
| "MC-1" | WALL "A" | ⊠ | - | 0.19 | 7 | 9 | 0.5 | 14 | 6 | 7 |
| "GC-1" | WALL "A" | ⊠ | 25 | - | - | - | - | - | - | 8 |
| "GC-2" | FLOOR | ⊠ | 160 | - | - | - | - | - | - | 8 |
| "GC-3" | WALL "B" | ⊠ | 70 | - | - | - | - | - | - | 8 |

NOTES:

1- CONCRETE LINING IS PROVIDED IN THIS SEGMENT SEE SHEET SL204

2- THERE IS NO SPALL AND CRACK REPAIR IN THIS SEGMENT

GRAPHIC SCALES:

0 1' 2' 4' 8' 12' 16'

3/16"=1'-0"

| REVISION NO. | DATE | REVISIONS | BY |
|---|---|---|---|

ATHER R. DAR
LICENSED PROFESSIONAL ENGINEER
No. 7808-S
HAWAII U.S.A.
Exp. Date: 4-30-20

THIS WORK WAS PREPARED BY ME OR UNDER MY SUPERVISION AND CONSTRUCTION OF THIS PROJECT WILL BE UNDER MY OBSERVATION

DEPARTMENT OF HAWAIIAN HOMELAND

# NANAKULI FLOOD CONTROL CHANNEL IMPROVEMENTS NANAKULI VALLEY, OAHU HAWAII

CHANNEL SEGMENT 156 REPAIR DETAILS - 2ND HALF

| | |
|---|---|
| DESIGNED BY: | TTP |
| DRAWN BY: | AK, AP, DL |
| CHECKED BY: | AD |
| SUPV: | |
| DATE: | 03/05/2019 |

HAWAII ENGINEERING GROUP, Inc.
Civil & Structural Engineers
1088 BISHOP STREET #2506
HONOLULU, HI 96813
Tel: 808-533-2092

JOB NO.

SHEET C156B

173OF 225 SHTS

FILE ___ ___ DRAWER ___ ___ ___ FOLDER ___ ___

Plot date: 15-Apr-2020
Full Size Plot

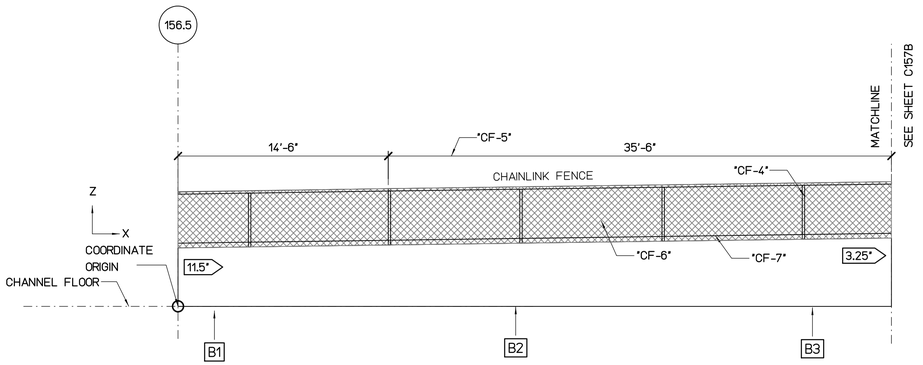


## WALL "B" FLATTEN VIEW

SCALE : 3/16" = 1'-0"

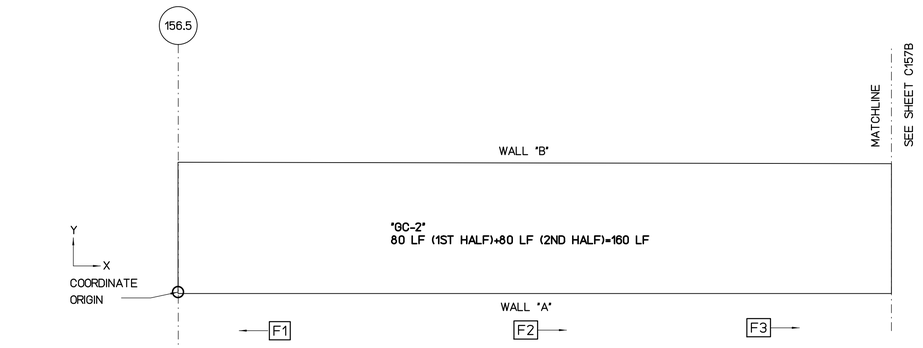


## FLOOR PLAN VIEW

SCALE : 3/16" = 1'-0"

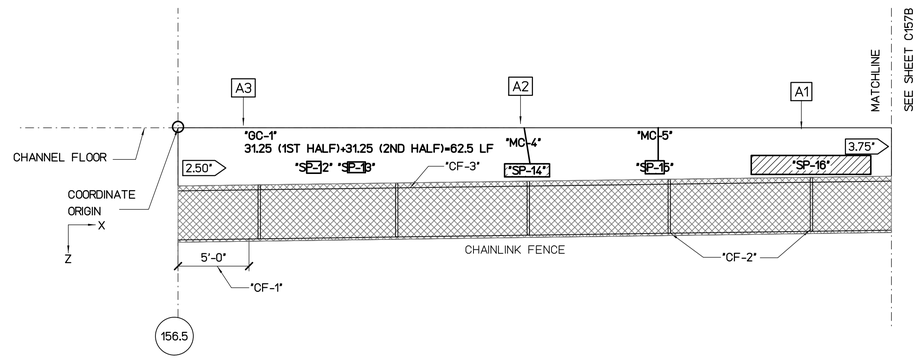


## WALL "A" FLATTEN VIEW

SCALE : 3/16" = 1'-0"

REPAIR LEGEND AND NOTES:

- 2 — CRACK AND SPALL REPAIR TYPES, SEE SHEETS SR201 AND SR202 FOR DETAILS. TYPE ⊠ INDICATES NO-REPAIR
- Ⓐ — CHAINLINK FENCE REPAIR TYPES, SEE SHEETS SF201 AND SF202 FOR DETAILS
- 1.0 — TOP OF WALL LEANING DISTANCE TOWARD CHANNEL IN INCHES, SEE SHEETS SL101 TO SL207 FOR CONCRETE LINING

PHOTO LEGEND:

- A1 — WALL "A" ELEVATION PHOTO IDENTIFICATION SEE FLATTEN VIEW FOR PHOTO LOCATION
- B1 — WALL "B" ELEVATION PHOTO IDENTIFICATION SEE FLATTEN VIEW FOR PHOTO LOCATION
- F1 — CHANNEL FLOOR PHOTO IDENTIFICATION SEE FLOOR PLAN VIEW FOR PHOTO LOCATION

ALL PARTS HAVE BEEN REPLACED AFTER THE PHOTOS

B1



B2



B3



F1



F2



F3



A1



A2



A3



### SPALL REPAIR CHART

| MARK | LOCATION | REPAIR TYPE | SPALL DIMENSION L | SPALL DIMENSION W | SPALL DIMENSION D | SPALL VOLUME | SPALL CENTER COORDINATE X | SPALL CENTER COORDINATE Y OR Z | RATING |
|---|---|---|---|---|---|---|---|---|---|
| "SP-12" | WALL "A" | ⊠ | 12 | 10 | 2 | 240 | 110 | 5 | 7 |
| "SP-13" | WALL "A" | ⊠ | 15 | 9 | 2 | 270 | 113 | 5 | 7 |
| "SP-14" | WALL "A" | ⊠ | 38 | 11 | 3 | 1254 | 125 | 5 | 7 |
| "SP-15" | WALL "A" | ⊠ | 16 | 11 | 3 | 528 | 134 | 5 | 7 |
| "SP-16" | WALL "A" | ⊠ | 101 | 16 | 4 | 6464 | 145 | 5 | 7 |
| "SP-17" | WALL "A" | ⊠ | 32 | 11 | 3 | 1056 | 166 | 5 | 7 |
| "SP-18" | WALL "A" | ⊠ | 159 | 13 | 4 | 8268 | 181 | 5 | 7 |
| "SP-19" | WALL "A" | ⊠ | 24 | 11 | 2 | 528 | 194.5 | 5 | 7 |
| "SP-20" | WALL "A" | ⊠ | 57 | 11 | 2 | 1254 | 199 | 5 | 7 |
| "SP-21" | WALL "B" | ⊠ | 17 | 10 | 2 | 340 | 187 | 5 | 7 |
| "SP-22" | WALL "B" | ⊠ | 58 | 11 | 3 | 1914 | 199 | 5 | 7 |

### CHAINLINK FENCE REPAIR CHART

| MARK | LOCATION | REPAIR TYPE | POSTS | TOP RAIL | BOTTOM WIRE | BRACE | FABRIC |
|---|---|---|---|---|---|---|---|
| "CF-1" | WALL "A" | Ⓒ | - | DAMAGED 5' | - | - | - |
| "CF-2" | WALL "A" | Ⓐ | DAMAGED 2 | - | - | - | - |
| "CF-3" | WALL "A" | Ⓓ | - | - | DAMAGED 50' | - | - |
| "CF-4" | WALL "B" | Ⓐ | DAMAGED 4 | - | - | - | - |
| "CF-5" | WALL "B" | Ⓒ | - | DAMAGED 35'-6" | - | - | - |
| "CF-6" | WALL "B" | Ⓔ | - | - | - | - | DAMAGED 25'x4' |
| "CF-7" | WALL "B" | Ⓓ | - | - | DAMAGED 35'-6" | - | - |

### CRACK REPAIR CHART

| MARK | LOCATION | REPAIR TYPE | GENERAL CRACKS (LF) | MAJOR CRACKS WIDTH (IN) | MAJOR CRACKS LENGTH (FT) | MAJOR CRACKS START PNT X | MAJOR CRACKS START PNT Y,Z | MAJOR CRACKS END PNT X | MAJOR CRACKS END PNT Y,Z | RATING |
|---|---|---|---|---|---|---|---|---|---|---|
| "MC-4" | WALL "A" | ⊠ | - | 0.06 | 5 | 124.5 | 1.5 | 125 | 5 | 7 |
| "MC-5" | WALL "A" | ⊠ | - | 0.06 | 4 | 134 | 1 | 134 | 4.5 | 7 |
| "GC-1" | WALL "A" | ⊠ | 62.5 | - | - | - | - | - | - | 8 |
| "GC-2" | FLOOR | ⊠ | 160 | - | - | - | - | - | - | 8 |

NOTES:

1- CONCRETE LINING IS PROVIDED IN THIS SEGMENT SEE SHEET SL205

2- THERE IS NO SPALL AND CRACK REPAIRS IN THIS SEGMENT

GRAPHIC SCALES:

0 1' 2' 4' 8' 12' 16'

3/16"=1'-0"

| REVISION NO. | DATE | REVISIONS | BY |
|---|---|---|---|

ATHER R. DAR
LICENSED PROFESSIONAL ENGINEER
No. 7808-S
HAWAII U.S.A.
Exp. Date: 4-30-20

THIS WORK WAS PREPARED BY ME OR UNDER MY SUPERVISION AND CONSTRUCTION OF THIS PROJECT WILL BE UNDER MY OBSERVATION

DEPARTMENT OF HAWAIIAN HOMELAND

# NANAKULI FLOOD CONTROL CHANNEL IMPROVEMENTS NANAKULI VALLEY, OAHU HAWAII

CHANNEL SEGMENT 157 REPAIR DETAILS - 1ST HALF

| | |
|---|---|
| DESIGNED BY: | TTP |
| DRAWN BY: | AK, AP, DL |
| CHECKED BY: | AD |
| SUPV: | |
| DATE: | 03/05/2019 |

HAWAII ENGINEERING GROUP, Inc.
Civil & Structural Engineers
1088 BISHOP STREET #2506
HONOLULU, HI 96813
Tel: 808-533-2092

JOB NO.

SHEET C157A

176OF 225 SHTS

FILE ___ DRAWER ___ ___ FOLDER ___ ___

Plot date: 15-Apr-2020
Full Size Plot

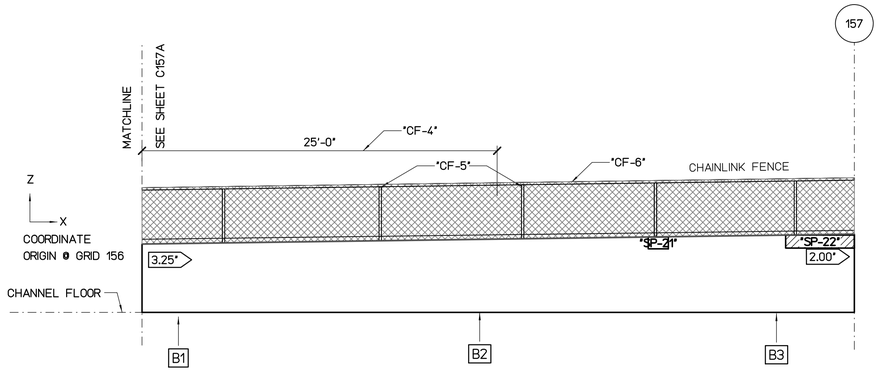


## WALL "B" FLATTEN VIEW

SCALE : 3/16" = 1'-0"

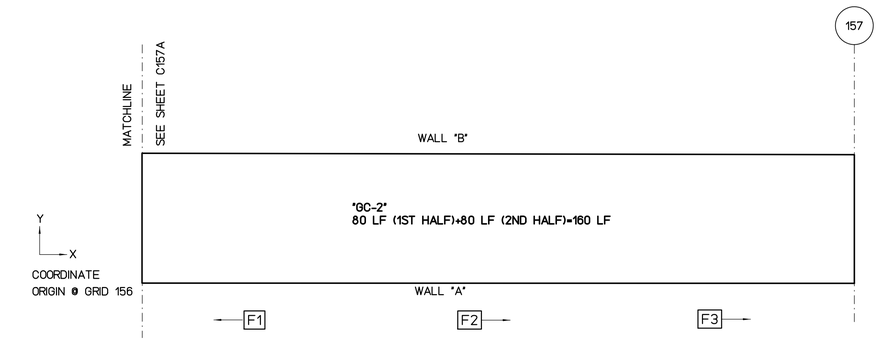


## FLOOR PLAN VIEW

SCALE : 3/16" = 1'-0"

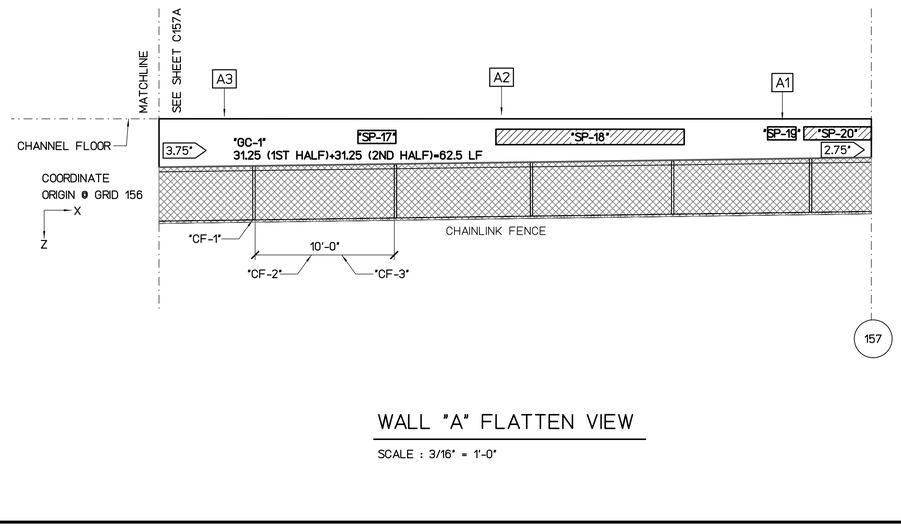


## WALL "A" FLATTEN VIEW

SCALE : 3/16" = 1'-0"

REPAIR LEGEND AND NOTES:

- 2 — CRACK AND SPALL REPAIR TYPES, SEE SHEETS SR201 AND SR202 FOR DETAILS. TYPE [*] INDICATES NO-REPAIR
- (A) — CHAINLINK FENCE REPAIR TYPES, SEE SHEETS SF201 AND SF202 FOR DETAILS
- 1.0 — TOP OF WALL LEANING DISTANCE TOWARD CHANNEL IN INCHES, SEE SHEETS SL101 TO SL207 FOR CONCRETE LINING

PHOTO LEGEND:

- A1 — WALL "A" ELEVATION PHOTO IDENTIFICATION SEE FLATTEN VIEW FOR PHOTO LOCATION
- B1 — WALL "B" ELEVATION PHOTO IDENTIFICATION SEE FLATTEN VIEW FOR PHOTO LOCATION
- F1 — CHANNEL FLOOR PHOTO IDENTIFICATION SEE FLOOR PLAN VIEW FOR PHOTO LOCATION

B1



B2



B3



F1

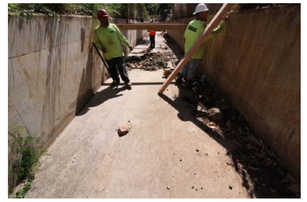

F2

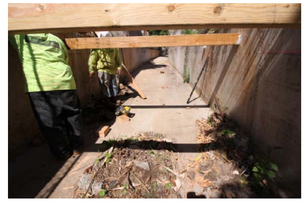

F3



A1



A2



A3



### SPALL REPAIR CHART

| MARK | LOCATION | REPAIR TYPE | SPALL DIMENSION L | SPALL DIMENSION W | SPALL DIMENSION D | SPALL VOLUME | SPALL CENTER COORDINATE X | SPALL CENTER COORDINATE Y OR Z | RATING |
|---|---|---|---|---|---|---|---|---|---|
| "SP-12" | WALL "A" | [*] | 12 | 10 | 2 | 240 | 110 | 5 | 7 |
| "SP-13" | WALL "A" | [*] | 15 | 9 | 2 | 270 | 113 | 5 | 7 |
| "SP-14" | WALL "A" | [*] | 38 | 11 | 3 | 1254 | 125 | 5 | 7 |
| "SP-15" | WALL "A" | [*] | 16 | 11 | 3 | 528 | 134 | 5 | 7 |
| "SP-16" | WALL "A" | [*] | 101 | 16 | 4 | 6464 | 145 | 5 | 7 |
| "SP-17" | WALL "A" | [*] | 32 | 11 | 3 | 1056 | 166 | 5 | 7 |
| "SP-18" | WALL "A" | [*] | 159 | 13 | 4 | 8268 | 181 | 5 | 7 |
| "SP-19" | WALL "A" | [*] | 24 | 11 | 2 | 528 | 194.5 | 5 | 7 |
| "SP-20" | WALL "A" | [*] | 57 | 11 | 2 | 1254 | 199 | 5 | 7 |
| "SP-21" | WALL "B" | [*] | 17 | 10 | 2 | 340 | 187 | 5 | 7 |
| "SP-22" | WALL "B" | [*] | 58 | 11 | 3 | 1914 | 199 | 5 | 7 |

### CHAINLINK FENCE REPAIR CHART

| MARK | LOCATION | REPAIR TYPE | POSTS | TOP RAIL | BOTTOM WIRE | BRACE | FABRIC |
|---|---|---|---|---|---|---|---|
| "CF-1" | WALL "A" | (A) | DAMAGED 1 | - | - | - | - |
| "CF-2" | WALL "A" | (E) | - | - | - | - | DAMAGED 10'x4' |
| "CF-3" | WALL "A" | (C) | - | DAMAGED 10' | - | - | - |
| "CF-4" | WALL "B" | (E) | - | - | - | - | DAMAGED 25'x4' |
| "CF-5" | WALL "B" | (A) | BENT 2 | - | - | - | - |
| "CF-6" | WALL "B" | (C) | - | DAMAGED 50' | - | - | - |

### CRACK REPAIR CHART

| MARK | LOCATION | REPAIR TYPE | GENERAL CRACKS (LF) | MAJOR CRACKS WIDTH (IN) | MAJOR CRACKS LENGTH (FT) | START PNT X | START PNT Y,Z | END PNT X | END PNT Y,Z | RATING |
|---|---|---|---|---|---|---|---|---|---|---|
| "MC-4" | WALL "A" | [*] | - | 0.06 | 5 | 124.5 | 1.5 | 125 | 5 | 7 |
| "MC-5" | WALL "A" | [*] | - | 0.06 | 4 | 134 | 1 | 134 | 4.5 | 7 |
| "GC-1" | WALL "A" | [*] | 62.5 | - | - | - | - | - | - | 8 |
| "GC-2" | FLOOR | [*] | 160 | - | - | - | - | - | - | 8 |

NOTES:

1- CONCRETE LINING IS PROVIDED IN THIS SEGMENT SEE SHEET SL205

2- THERE IS NO SPALL AND CRACK REPAIRS IN THIS SEGMENT

GRAPHIC SCALES:

0 1' 2' 4' 8' 12' 16'

3/16"=1'-0"

| REVISION NO. | DATE | REVISIONS | BY |
|---|---|---|---|

ATHER R. DAR
LICENSED PROFESSIONAL ENGINEER
No. 7808-S
HAWAII U.S.A.
Exp. Date: 4-30-20

THIS WORK WAS PREPARED BY ME OR UNDER MY SUPERVISION AND CONSTRUCTION OF THIS PROJECT WILL BE UNDER MY OBSERVATION

DEPARTMENT OF HAWAIIAN HOMELAND

# NANAKULI FLOOD CONTROL CHANNEL IMPROVEMENTS NANAKULI VALLEY, OAHU HAWAII

CHANNEL SEGMENT 157 REPAIR DETAILS - 2ND HALF

| | |
|---|---|
| DESIGNED BY: | TTP |
| DRAWN BY: | AK, AP, DL |
| CHECKED BY: | AD |
| SUPV: | |
| DATE: | 03/05/2019 |

HAWAII ENGINEERING GROUP, Inc.
Civil & Structural Engineers
1088 BISHOP STREET #2506
HONOLULU, HI 96813
Tel: 808-533-2092

JOB NO.

SHEET C157B

177 OF 225 SHTS

FILE ___ DRAWER ___ ___ FOLDER ___ ___

Plot date: 15-Apr-2020
Full Size Plot

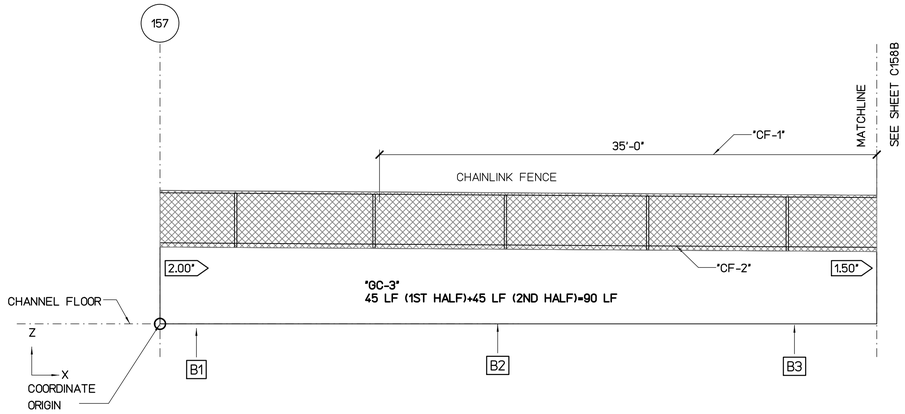


## WALL "B" FLATTEN VIEW

SCALE : 3/16" = 1'-0"

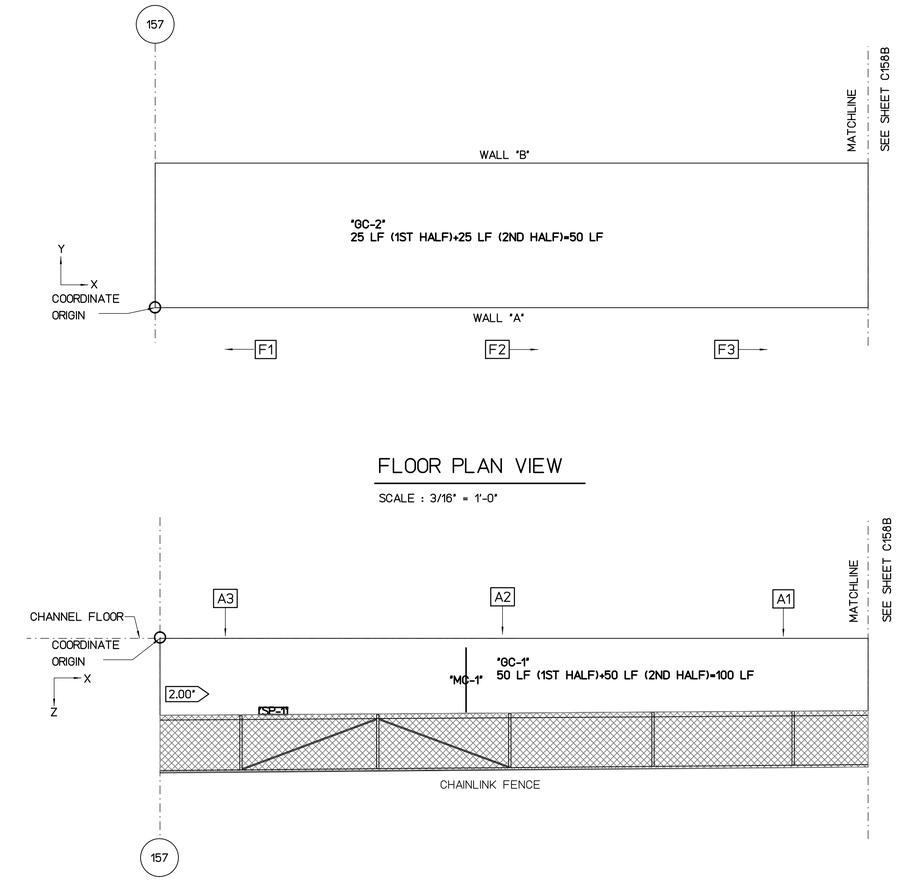


## FLOOR PLAN VIEW

SCALE : 3/16" = 1'-0"




## WALL "A" FLATTEN VIEW

SCALE : 3/16" = 1'-0"

REPAIR LEGEND AND NOTES:

- [2] CRACK AND SPALL REPAIR TYPES, SEE SHEETS SR201 AND SR202 FOR DETAILS. TYPE [*] INDICATES NO-REPAIR
- (A) CHAINLINK FENCE REPAIR TYPES, SEE SHEETS SF201 AND SF202 FOR DETAILS
- 1.0> TOP OF WALL LEANING DISTANCE TOWARD CHANNEL IN INCHES, SEE SHEETS SL101 TO SL207 FOR CONCRETE LINING

PHOTO LEGEND:

- [A1] WALL "A" ELEVATION PHOTO IDENTIFICATION SEE FLATTEN VIEW FOR PHOTO LOCATION
- [B1] WALL "B" ELEVATION PHOTO IDENTIFICATION SEE FLATTEN VIEW FOR PHOTO LOCATION
- [F1] CHANNEL FLOOR PHOTO IDENTIFICATION SEE FLOOR PLAN VIEW FOR PHOTO LOCATION

B1



B2



B3



F1



F2



F3



A1



A2



A3



### SPALL REPAIR CHART

| MARK | LOCATION | REPAIR TYPE | SPALL DIMENSION L | SPALL DIMENSION W | SPALL DIMENSION D | SPALL VOLUME | SPALL CENTER COORDINATE X | SPALL CENTER COORDINATE Y OR Z | RATING |
|---|---|---|---|---|---|---|---|---|---|
| "SP-1" | WALL "A" | [*] | 24 | 6 | 3 | 432 | 8 | 5.5 | 7 |
| "SP-2" | WALL "A" | [*] | 92 | 12 | 3 | 3312 | 51 | 5 | 7 |
| "SP-3" | WALL "A" | [*] | 138 | 14 | 3 | 5796 | 79 | 5 | 7 |
| "SP-4" | WALL "A" | [*] | 92 | 14 | 3 | 3864 | 92 | 5 | 7 |
| "SP-5" | WALL "B" | [*] | 44 | 30 | 3 | 3960 | 85 | 4.5 | 7 |

### CHAINLINK FENCE REPAIR CHART

| MARK | LOCATION | REPAIR TYPE | POSTS | TOP RAIL | BOTTOM WIRE | BRACE | FABRIC |
|---|---|---|---|---|---|---|---|
| "CF-1" | WALL "B" | (E) | - | - | - | - | DAMAGED 35'x4' |
| "CF-2" | WALL "B" | (D) | - | - | DAMAGED 50' | - | - |

### CRACK REPAIR CHART

| MARK | LOCATION | REPAIR TYPE | GENERAL CRACKS (LF) | MAJOR CRACKS WIDTH (IN) | MAJOR CRACKS LENGTH (FT) | MAJOR CRACKS START PNT X | MAJOR CRACKS START PNT Y,Z | MAJOR CRACKS END PNT X | MAJOR CRACKS END PNT Y,Z | RATING |
|---|---|---|---|---|---|---|---|---|---|---|
| "MC-1" | WALL "A" | [*] | - | 0.19 | 5 | 23 | 1 | 23 | 5.5 | 7 |
| "GC-1" | WALL "B" | [*] | 90 | - | - | - | - | - | - | 8 |
| "GC-2" | FLOOR | [*] | 50 | - | - | - | - | - | - | 8 |
| "GC-3" | WALL "A" | [*] | 100 | - | - | - | - | - | - | 8 |

NOTES:

1- CONCRETE LINING IS PROVIDED IN THIS SEGMENT SEE SHEET SL205

2- THERE IS NO SPALL AND CRACK REPAIRS IN THIS SEGMENT

GRAPHIC SCALES:

0 1' 2' 4' 8' 12' 16'

3/16"=1'-0"

| REVISION NO. | DATE | REVISIONS | BY |
|---|---|---|---|

ARTHER R DAR
LICENSED PROFESSIONAL ENGINEER
No. 7808-S
HAWAII U.S.A.

Exp. Date: 4-30-20

THIS WORK WAS PREPARED BY ME OR UNDER MY SUPERVISION AND CONSTRUCTION OF THIS PROJECT WILL BE UNDER MY OBSERVATION

DEPARTMENT OF HAWAIIAN HOMELAND

# NANAKULI FLOOD CONTROL CHANNEL IMPROVEMENTS NANAKULI VALLEY, OAHU HAWAII

CHANNEL SEGMENT [158] REPAIR DETAILS - 1ST HALF

| | |
|---|---|
| DESIGNED BY: | TTP |
| DRAWN BY: | AK, AP, DL |
| CHECKED BY: | AD |
| SUPV: | |
| DATE: | 03/05/2019 |

HAWAII ENGINEERING GROUP, Inc.
Civil & Structural Engineers
1088 BISHOP STREET #2506
HONOLULU, HI 96813
Tel: 808-533-2092

JOB NO.

SHEET C158A

178OF 225 SHTS

FILE ___ DRAWER ___ ___ FOLDER ___ ___

Plot date: 15-Apr-2020
Full Size Plot

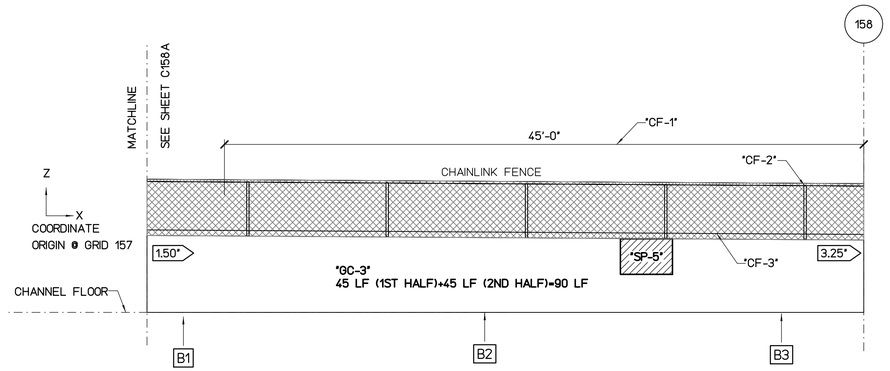


## WALL "B" FLATTEN VIEW

SCALE : 3/16" = 1'-0"

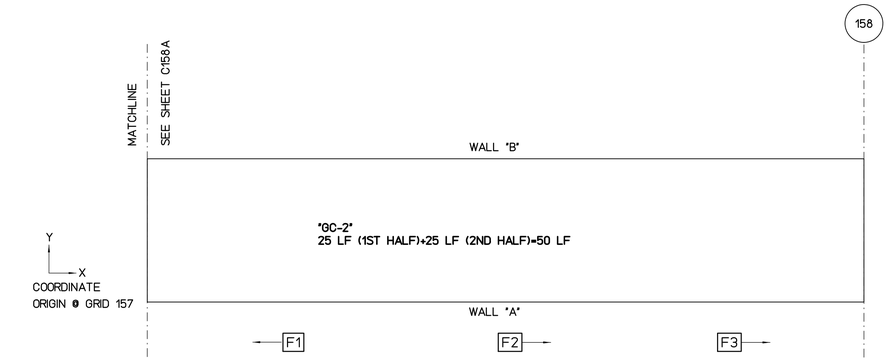


## FLOOR PLAN VIEW

SCALE : 3/16" = 1'-0"

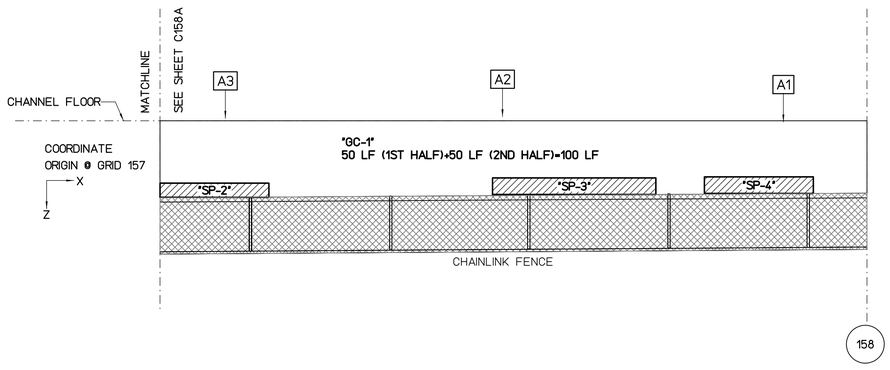


## WALL "A" FLATTEN VIEW

SCALE : 3/16" = 1'-0"

REPAIR LEGEND AND NOTES:

- 2 — CRACK AND SPALL REPAIR TYPES, SEE SHEETS SR201 AND SR202 FOR DETAILS. TYPE [*] INDICATES NO-REPAIR
- (A) — CHAINLINK FENCE REPAIR TYPES, SEE SHEETS SF201 AND SF202 FOR DETAILS
- 1.0 — TOP OF WALL LEANING DISTANCE TOWARD CHANNEL IN INCHES, SEE SHEETS SL101 TO SL207 FOR CONCRETE LINING

PHOTO LEGEND:

- A1 — WALL "A" ELEVATION PHOTO IDENTIFICATION SEE FLATTEN VIEW FOR PHOTO LOCATION
- B1 — WALL "B" ELEVATION PHOTO IDENTIFICATION SEE FLATTEN VIEW FOR PHOTO LOCATION
- F1 — CHANNEL FLOOR PHOTO IDENTIFICATION SEE FLOOR PLAN VIEW FOR PHOTO LOCATION

B1



B2



B3



F1



F2



F3



A1



A2



A3



### SPALL REPAIR CHART

| MARK | LOCATION | REPAIR TYPE | SPALL DIMENSION L | SPALL DIMENSION W | SPALL DIMENSION D | SPALL VOLUME | SPALL CENTER COORDINATE X | SPALL CENTER COORDINATE Y OR Z | RATING |
|---|---|---|---|---|---|---|---|---|---|
| "SP-1" | WALL "A" | [*] | 24 | 6 | 3 | 432 | 8 | 5.5 | 7 |
| "SP-2" | WALL "A" | [*] | 92 | 12 | 3 | 3312 | 51 | 5 | 7 |
| "SP-3" | WALL "A" | [*] | 138 | 14 | 3 | 5796 | 79 | 5 | 7 |
| "SP-4" | WALL "A" | [*] | 92 | 14 | 3 | 3864 | 92 | 5 | 7 |
| "SP-5" | WALL "B" | [*] | 44 | 30 | 3 | 3960 | 85 | 4.5 | 7 |

### CHAINLINK FENCE REPAIR CHART

| MARK | LOCATION | REPAIR TYPE | POSTS | TOP RAIL | BOTTOM WIRE | BRACE | FABRIC |
|---|---|---|---|---|---|---|---|
| "CF-1" | WALL "B" | (E) | - | - | - | - | DAMAGED 45'x4' |
| "CF-2" | WALL "B" | (A) | BENT 1 | - | - | - | - |
| "CF-3" | WALL "B" | (D) | - | - | DAMAGED 50' | - | - |

### CRACK REPAIR CHART

| MARK | LOCATION | REPAIR TYPE | GENERAL CRACKS (LF) | MAJOR CRACKS WIDTH (IN) | MAJOR CRACKS LENGTH (FT) | MAJOR CRACKS START PNT X | MAJOR CRACKS START PNT Y,Z | MAJOR CRACKS END PNT X | MAJOR CRACKS END PNT Y,Z | RATING |
|---|---|---|---|---|---|---|---|---|---|---|
| "MC-1" | WALL "A" | [*] | - | 0.19 | 5 | 23 | 1 | 23 | 5.5 | 7 |
| "GC-1" | WALL "B" | [*] | 90 | - | - | - | - | - | - | 8 |
| "GC-2" | FLOOR | [*] | 50 | - | - | - | - | - | - | 8 |
| "GC-3" | WALL "A" | [*] | 100 | - | - | - | - | - | - | 8 |

NOTES:

1- CONCRETE LINING IS PROVIDED IN THIS SEGMENT SEE SHEET SL205

2- THERE IS NO SPALL AND CRACK REPAIRS IN THIS SEGMENT

GRAPHIC SCALES:

0 1' 2' 4' 8' 12' 16'

3/16"=1'-0"

| REVISION NO. | DATE | REVISIONS | BY |
|---|---|---|---|

ATHER R. DAR
LICENSED PROFESSIONAL ENGINEER
No. 7808-S
HAWAII U.S.A.
Exp. Date: 4-30-20

THIS WORK WAS PREPARED BY ME OR UNDER MY SUPERVISION AND CONSTRUCTION OF THIS PROJECT WILL BE UNDER MY OBSERVATION

DEPARTMENT OF HAWAIIAN HOMELAND

# NANAKULI FLOOD CONTROL CHANNEL IMPROVEMENTS NANAKULI VALLEY, OAHU HAWAII

CHANNEL SEGMENT 158 REPAIR DETAILS - 2ND HALF

| | |
|---|---|
| DESIGNED BY: | TTP |
| DRAWN BY: | AK, AP, DL |
| CHECKED BY: | AD |
| SUPV: | |
| DATE: | 03/05/2019 |

HAWAII ENGINEERING GROUP, Inc.
Civil & Structural Engineers
1088 BISHOP STREET #2506
HONOLULU, HI 96813
Tel: 808-533-2092

JOB NO.

SHEET C158B

179 OF 225 SHTS

FILE ___ DRAWER ___ ___ FOLDER ___ ___

Plot date: 15-Apr-2020
Full Size Plot

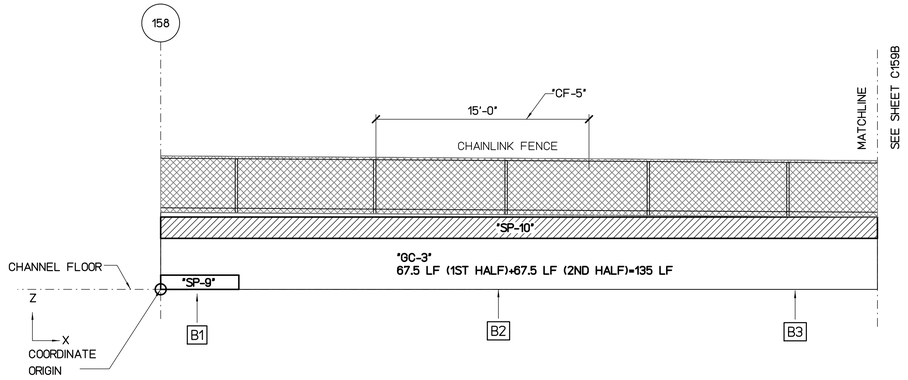


## WALL "B" FLATTEN VIEW

SCALE : 3/16" = 1'-0"

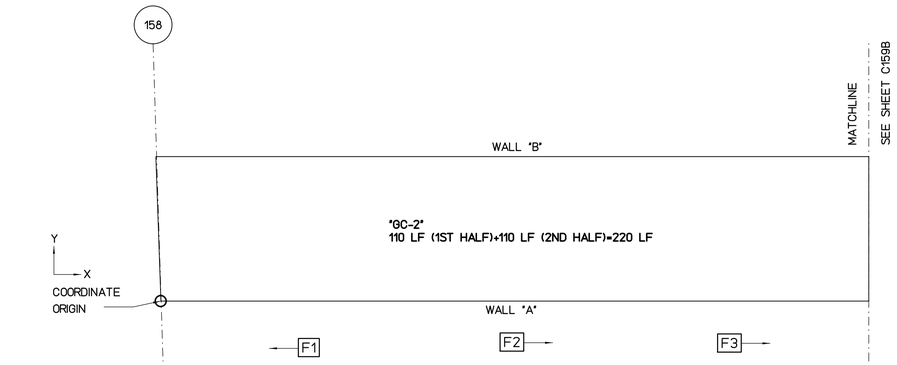


## FLOOR PLAN VIEW

SCALE : 3/16" = 1'-0"

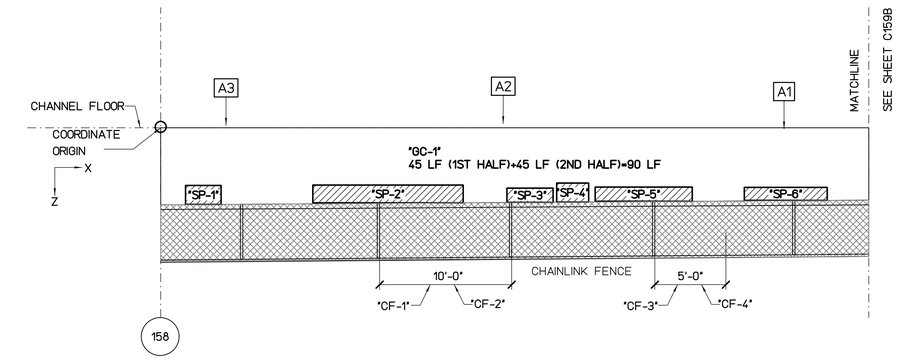


## WALL "A" FLATTEN VIEW

SCALE : 3/16" = 1'-0"

REPAIR LEGEND AND NOTES:

- 2 — CRACK AND SPALL REPAIR TYPES, SEE SHEETS SR201 AND SR202 FOR DETAILS. TYPE [*] INDICATES NO-REPAIR
- (A) — CHAINLINK FENCE REPAIR TYPES, SEE SHEETS SF201 AND SF202 FOR DETAILS
- 1.0 — TOP OF WALL LEANING DISTANCE TOWARD CHANNEL IN INCHES, SEE SHEETS SL101 TO SL207 FOR CONCRETE LINING

PHOTO LEGEND:

- A1 — WALL "A" ELEVATION PHOTO IDENTIFICATION SEE FLATTEN VIEW FOR PHOTO LOCATION
- B1 — WALL "B" ELEVATION PHOTO IDENTIFICATION SEE FLATTEN VIEW FOR PHOTO LOCATION
- F1 — CHANNEL FLOOR PHOTO IDENTIFICATION SEE FLOOR PLAN VIEW FOR PHOTO LOCATION

B1



B2



B3



F1



F2



F3



A1



A2



A3



### SPALL REPAIR CHART

| MARK | LOCATION | REPAIR TYPE | SPALL DIMENSION L | W | D | SPALL VOLUME | SPALL CENTER COORDINATE X | Y OR Z | RATING |
|---|---|---|---|---|---|---|---|---|---|
| "SP-1" | WALL "A" | [*] | 30 | 16 | 3 | 1440 | 3 | 5 | 7 |
| "SP-2" | WALL "A" | [*] | 127 | 15 | 3 | 5715 | 16 | 5 | 7 |
| "SP-3" | WALL "A" | [*] | 39 | 12 | 3 | 1404 | 26 | 5 | 7 |
| "SP-4" | WALL "A" | [*] | 27 | 16 | 3 | 1296 | 29 | 5 | 7 |
| "SP-5" | WALL "A" | [*] | 82 | 12 | 3 | 2952 | 34 | 5 | 7 |
| "SP-6" | WALL "A" | [*] | 70 | 11 | 3 | 2310 | 44 | 5 | 7 |
| "SP-7" | WALL "A" | [*] | 71 | 12 | 3 | 2556 | 83 | 5 | 7 |
| "SP-8" | FLOOR | [*] | 69 | 19 | 3 | 3933 | 67 | 1 | 7 |
| "SP-9" | WALL "B" | [*] | 66 | 12 | 4 | 3168 | 0.5 | 2.5 | 6 |
| "SP-10" | WALL "B" | [*] | 612 | 18 | 4 | 44064 | 26 | 5 | 7 |
| "SP-11" | WALL "B" | [*] | 92 | 65 | 4 | 23920 | 57 | 2.5 | 7 |

### CHAINLINK FENCE REPAIR CHART

| MARK | LOCATION | REPAIR TYPE | POSTS | TOP RAIL | BOTTOM WIRE | BRACE | FABRIC |
|---|---|---|---|---|---|---|---|
| "CF-1" | WALL "A" | (E) | - | - | - | - | DAMAGED 10'x4' |
| "CF-2" | WALL "A" | (C) | - | BENT 10' | - | - | - |
| "CF-3" | WALL "A" | (E) | - | - | - | - | DAMAGED 5'x4' |
| "CF-4" | WALL "A" | (C) | - | BENT 5' | - | - | - |
| "CF-5" | WALL "B" | (E) | - | - | - | - | DAMAGED 15'x4' |

### CRACK REPAIR CHART

| MARK | LOCATION | REPAIR TYPE | GENERAL CRACKS (LF) | MAJOR CRACKS WIDTH (IN) | LENGTH (FT) | START PNT X | START PNT Y,Z | END PNT X | END PNT Y,Z | RATING |
|---|---|---|---|---|---|---|---|---|---|---|
| "MC-1" | WALL "B" | [*] | - | 0.19 | 2 | 75.5 | 4 | 75.5 | 5.5 | 7 |
| "GC-1" | WALL "A" | [*] | 90 | - | - | - | - | - | - | 8 |
| "GC-2" | FLOOR | [*] | 220 | - | - | - | - | - | - | 8 |
| "GC-3" | WALL "B" | [*] | 135 | - | - | - | - | - | - | 8 |

NOTES:

1- CONCRETE LINING IS PROVIDED IN THIS SEGMENT SEE SHEET SL205

2- THERE IS NO SPALL AND CRACK REPAIRS IN THIS SEGMENT

GRAPHIC SCALES:

0 1' 2' 4' 8' 12' 16'

3/16"=1'-0"

| REVISION NO. | DATE | REVISIONS | BY |
|---|---|---|---|

ATHER R. DAR
LICENSED PROFESSIONAL ENGINEER
No. 7808-S
HAWAII U.S.A.
Exp. Date: 4-30-20

THIS WORK WAS PREPARED BY ME OR UNDER MY SUPERVISION AND CONSTRUCTION OF THIS PROJECT WILL BE UNDER MY OBSERVATION

DEPARTMENT OF HAWAIIAN HOMELAND

# NANAKULI FLOOD CONTROL CHANNEL IMPROVEMENTS NANAKULI VALLEY, OAHU HAWAII

CHANNEL SEGMENT 159 REPAIR DETAILS - 1ST HALF

| | |
|---|---|
| DESIGNED BY: | TTP |
| DRAWN BY: | AK, AP, DL |
| CHECKED BY: | AD |
| SUPV: | |
| DATE: | 03/05/2019 |

HAWAII ENGINEERING GROUP, Inc.
Civil & Structural Engineers
1088 BISHOP STREET #2506
HONOLULU, HI 96813
Tel: 808-533-2092

JOB NO.

SHEET C159A

180OF 225 SHTS

FILE ___ DRAWER ___ ___ FOLDER ___ ___

Plot date: 15-Apr-2020
Full Size Plot

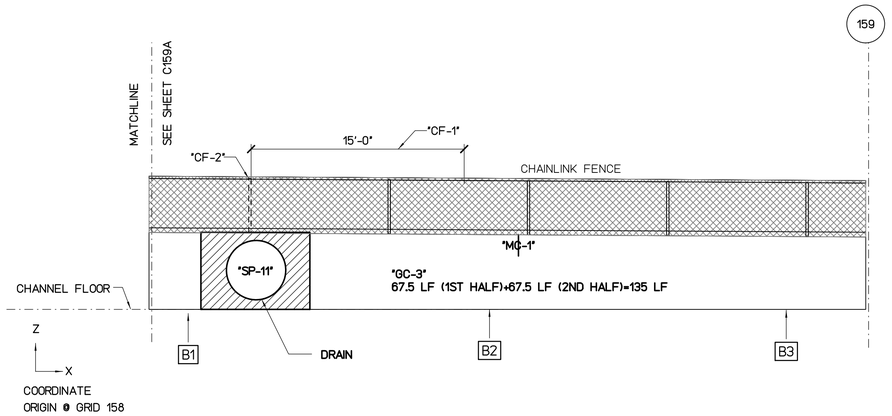


## WALL "B" FLATTEN VIEW

SCALE : 3/16" = 1'-0"

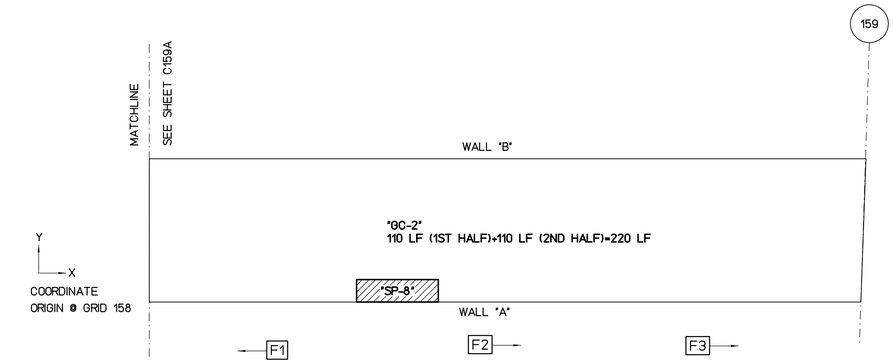


## FLOOR PLAN VIEW

SCALE : 3/16" = 1'-0"

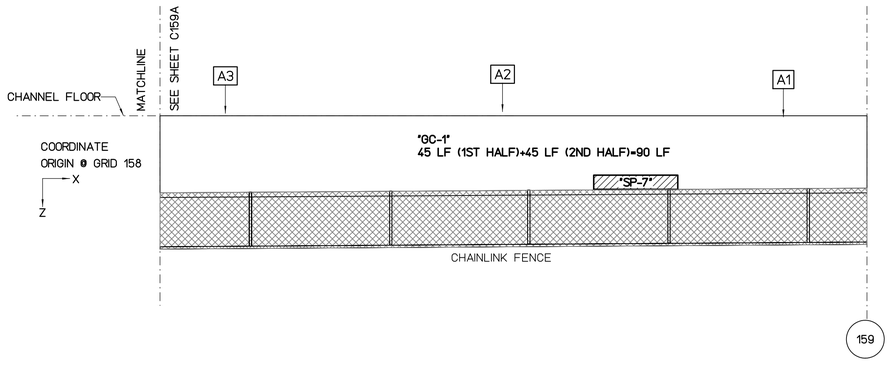


## WALL "A" FLATTEN VIEW

SCALE : 3/16" = 1'-0"

REPAIR LEGEND AND NOTES:

- [2] CRACK AND SPALL REPAIR TYPES, SEE SHEETS SR201 AND SR202 FOR DETAILS. TYPE [*] INDICATES NO-REPAIR
- (A) CHAINLINK FENCE REPAIR TYPES, SEE SHEETS SF201 AND SF202 FOR DETAILS
- 1.0> TOP OF WALL LEANING DISTANCE TOWARD CHANNEL IN INCHES, SEE SHEETS SL101 TO SL207 FOR CONCRETE LINING

PHOTO LEGEND:

- [A1] WALL "A" ELEVATION PHOTO IDENTIFICATION SEE FLATTEN VIEW FOR PHOTO LOCATION
- [B1] WALL "B" ELEVATION PHOTO IDENTIFICATION SEE FLATTEN VIEW FOR PHOTO LOCATION
- [F1] CHANNEL FLOOR PHOTO IDENTIFICATION SEE FLOOR PLAN VIEW FOR PHOTO LOCATION

B1



B2



B3



F1



F2



F3



A1



A2



A3



### SPALL REPAIR CHART

| MARK | LOCATION | REPAIR TYPE | SPALL DIMENSION L | W | D | SPALL VOLUME | SPALL CENTER COORDINATE X | Y OR Z | RATING |
|---|---|---|---|---|---|---|---|---|---|
| "SP-1" | WALL "A" | [*] | 30 | 16 | 3 | 1440 | 3 | 5 | 7 |
| "SP-2" | WALL "A" | [*] | 127 | 15 | 3 | 5715 | 16 | 5 | 7 |
| "SP-3" | WALL "A" | [*] | 39 | 12 | 3 | 1404 | 26 | 5 | 7 |
| "SP-4" | WALL "A" | [*] | 27 | 16 | 3 | 1296 | 29 | 5 | 7 |
| "SP-5" | WALL "A" | [*] | 82 | 12 | 3 | 2952 | 34 | 5 | 7 |
| "SP-6" | WALL "A" | [*] | 70 | 11 | 3 | 2310 | 44 | 5 | 7 |
| "SP-7" | WALL "A" | [*] | 71 | 12 | 3 | 2556 | 83 | 5 | 7 |
| "SP-8" | FLOOR | [*] | 69 | 19 | 3 | 3933 | 67 | 1 | 7 |
| "SP-9" | WALL "B" | [*] | 66 | 12 | 4 | 3168 | 0.5 | 2.5 | 6 |
| "SP-10" | WALL "B" | [*] | 612 | 18 | 4 | 44064 | 26 | 5 | 7 |
| "SP-11" | WALL "B" | [*] | 92 | 65 | 4 | 23920 | 57 | 2.5 | 7 |

### CHAINLINK FENCE REPAIR CHART

| MARK | LOCATION | REPAIR TYPE | POSTS | TOP RAIL | BOTTOM WIRE | BRACE | FABRIC |
|---|---|---|---|---|---|---|---|
| "CF-1" | WALL "B" | (E) | - | - | - | - | DAMAGED 15'x4" |
| "CF-2" | WALL "B" | (A) | MISSING 1 | - | - | - | - |

### CRACK REPAIR CHART

| MARK | LOCATION | REPAIR TYPE | GENERAL CRACKS (LF) | MAJOR CRACKS WIDTH (IN) | LENGTH (FT) | START PNT X | START PNT Y,Z | END PNT X | END PNT Y,Z | RATING |
|---|---|---|---|---|---|---|---|---|---|---|
| "MC-1" | WALL "B" | [*] | - | 0.19 | 2 | 75.5 | 4 | 75.5 | 5.5 | 7 |
| "GC-1" | WALL "A" | [*] | 90 | - | - | - | - | - | - | 8 |
| "GC-2" | FLOOR | [*] | 220 | - | - | - | - | - | - | 8 |
| "GC-3" | WALL "B" | [*] | 135 | - | - | - | - | - | - | 8 |

NOTES:

1- CONCRETE LINING IS PROVIDED IN THIS SEGMENT SEE SHEET SL205

2- THERE IS NO SPALL AND CRACK REPAIRS IN THIS SEGMENT

GRAPHIC SCALES:

0 1' 2' 4' 8' 12' 16'

3/16"=1'-0"

| REVISION NO. | DATE | REVISIONS | BY |
|---|---|---|---|

ATHER R. DAR
LICENSED PROFESSIONAL ENGINEER
No. 7808-S
HAWAII U.S.A.

Exp. Date: 4-30-20

THIS WORK WAS PREPARED BY ME OR UNDER MY SUPERVISION AND CONSTRUCTION OF THIS PROJECT WILL BE UNDER MY OBSERVATION

DEPARTMENT OF HAWAIIAN HOMELAND

# NANAKULI FLOOD CONTROL CHANNEL IMPROVEMENTS NANAKULI VALLEY, OAHU HAWAII

CHANNEL SEGMENT [159] REPAIR DETAILS - 2ND HALF

| | |
|---|---|
| DESIGNED BY: | TTP |
| DRAWN BY: | AK, AP, DL |
| CHECKED BY: | AD |
| SUPV: | |
| DATE: | 03/05/2019 |

HAWAII ENGINEERING GROUP, Inc.
Civil & Structural Engineers
1088 BISHOP STREET #2506
HONOLULU, HI 96813
Tel: 808-533-2092

JOB NO.

SHEET C159B
181 OF 225 SHTS

FILE ___ DRAWER ___ ___ FOLDER ___ ___

Plot date: 15-Apr-2020
Full Size Plot

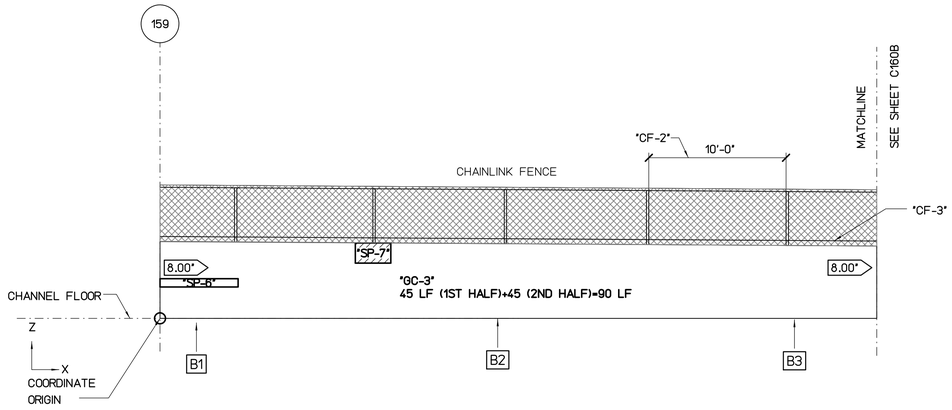


## WALL "B" FLATTEN VIEW

SCALE : 3/16" = 1'-0"

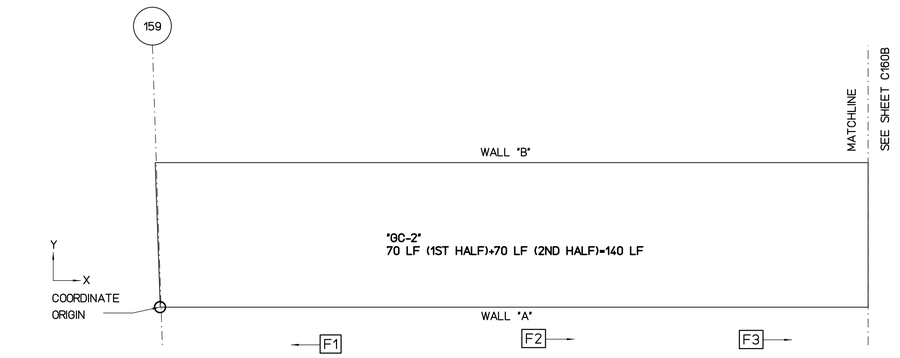


## FLOOR PLAN VIEW

SCALE : 3/16" = 1'-0"

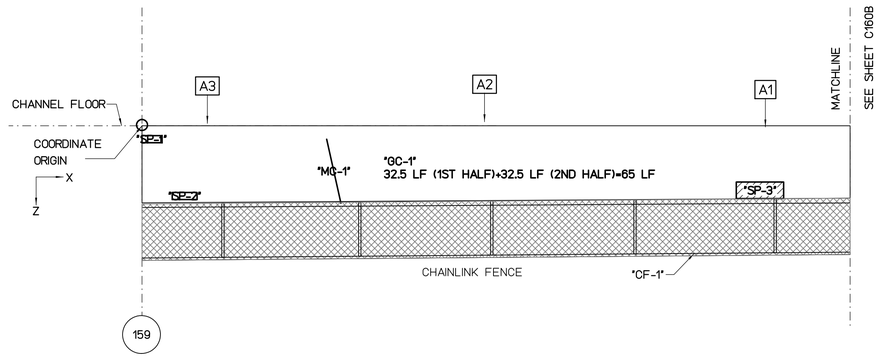


## WALL "A" FLATTEN VIEW

SCALE : 3/16" = 1'-0"

REPAIR LEGEND AND NOTES:

- [2] CRACK AND SPALL REPAIR TYPES, SEE SHEETS SR201 AND SR202 FOR DETAILS. TYPE [*] INDICATES NO-REPAIR
- (A) CHAINLINK FENCE REPAIR TYPES, SEE SHEETS SF201 AND SF202 FOR DETAILS
- 1.0> TOP OF WALL LEANING DISTANCE TOWARD CHANNEL IN INCHES, SEE SHEETS SL101 TO SL207 FOR CONCRETE LINING

PHOTO LEGEND:

- [A1] WALL "A" ELEVATION PHOTO IDENTIFICATION SEE FLATTEN VIEW FOR PHOTO LOCATION
- [B1] WALL "B" ELEVATION PHOTO IDENTIFICATION SEE FLATTEN VIEW FOR PHOTO LOCATION
- [F1] CHANNEL FLOOR PHOTO IDENTIFICATION SEE FLOOR PLAN VIEW FOR PHOTO LOCATION

B1



B2



B3



F1



F2



F3

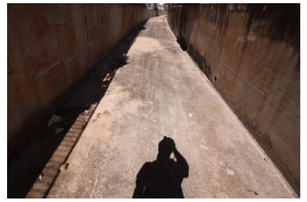

A1



A2



A3



### SPALL REPAIR CHART

| MARK | LOCATION | REPAIR TYPE | SPALL DIMENSION L | SPALL DIMENSION W | SPALL DIMENSION D | SPALL VOLUME | SPALL CENTER COORDINATE X | SPALL CENTER COORDINATE Y OR Z | RATING |
|---|---|---|---|---|---|---|---|---|---|
| "SP-1" | WALL "A" | [*] | 16 | 6 | 3 | 288 | 0.7 | 1 | 7 |
| "SP-2" | WALL "A" | [*] | 21 | 6 | 2 | 252 | 3 | 5 | 7 |
| "SP-3" | WALL "A" | [*] | 40 | 14 | 2 | 1120 | 43.5 | 4.6 | 7 |
| "SP-4" | WALL "A" | [*] | 44 | 10 | 2 | 880 | 84 | 5 | 7 |
| "SP-5" | FLOOR | [*] | 322 | 25 | 3 | 24150 | 77 | 1 | 7 |
| "SP-6" | WALL "B" | [*] | 66 | 7 | 8 | 3696 | 2.8 | 2.5 | 5 |
| "SP-7" | WALL "B" | [*] | 30 | 17 | 4 | 2040 | 15 | 4.6 | 6 |
| "SP-8" | WALL "B" | [*] | 80 | 12 | 4 | 3840 | 93 | 0.5 | 6 |

### CHAINLINK FENCE REPAIR CHART

| MARK | LOCATION | REPAIR TYPE | POSTS | TOP RAIL | BOTTOM WIRE | BRACE | FABRIC |
|---|---|---|---|---|---|---|---|
| "CF-1" | WALL "A" | (D) | - | - | DAMAGED 50' | - | - |
| "CF-2" | WALL "B" | (E) | - | - | - | - | DAMAGED 10'x4' |
| "CF-3" | WALL "B" | (D) | - | - | DAMAGED 50' | - | - |

### CRACK REPAIR CHART

| MARK | LOCATION | REPAIR TYPE | GENERAL CRACKS (LF) | MAJOR CRACKS WIDTH (IN) | MAJOR CRACKS LENGTH (FT) | MAJOR CRACKS START PNT X | MAJOR CRACKS START PNT Y,Z | MAJOR CRACKS END PNT X | MAJOR CRACKS END PNT Y,Z | RATING |
|---|---|---|---|---|---|---|---|---|---|---|
| "MC-1" | WALL "A" | [*] | - | 0.19 | 4 | 13 | 1 | 14 | 5.5 | 7 |
| "GC-1" | WALL "A" | [*] | 65 | - | - | - | - | - | - | 8 |
| "GC-2" | FLOOR | [*] | 140 | - | - | - | - | - | - | 8 |
| "GC-3" | WALL "B" | [*] | 90 | - | - | - | - | - | - | 8 |

NOTES:

1- CONCRETE LINING IS PROVIDED IN THIS SEGMENT SEE SHEET SL206

2- THERE IS NO SPALL AND CRACK REPAIRS IN THIS SEGMENT

GRAPHIC SCALES:

0 1' 2' 4' 8' 12' 16'

3/16"=1'-0"

| REVISION NO. | DATE | REVISIONS | BY |
|---|---|---|---|

ATHER R. DAR
LICENSED PROFESSIONAL ENGINEER
No. 7808-S
HAWAII U.S.A.
Exp. Date: 4-30-20

THIS WORK WAS PREPARED BY ME OR UNDER MY SUPERVISION AND CONSTRUCTION OF THIS PROJECT WILL BE UNDER MY OBSERVATION

DEPARTMENT OF HAWAIIAN HOMELAND

# NANAKULI FLOOD CONTROL CHANNEL IMPROVEMENTS NANAKULI VALLEY, OAHU HAWAII

## CHANNEL SEGMENT 160 REPAIR DETAILS - 1ST HALF

| | |
|---|---|
| DESIGNED BY: | TTP |
| DRAWN BY: | AK, AP, DL |
| CHECKED BY: | AD |
| SUPV: | |
| DATE: | 03/05/2019 |

HAWAII ENGINEERING GROUP, Inc.
Civil & Structural Engineers
1088 BISHOP STREET #2506
HONOLULU, HI 96813
Tel: 808-533-2092

JOB NO.

SHEET C160A

182OF 225 SHTS

FILE ___ DRAWER ___ ___ FOLDER ___ ___

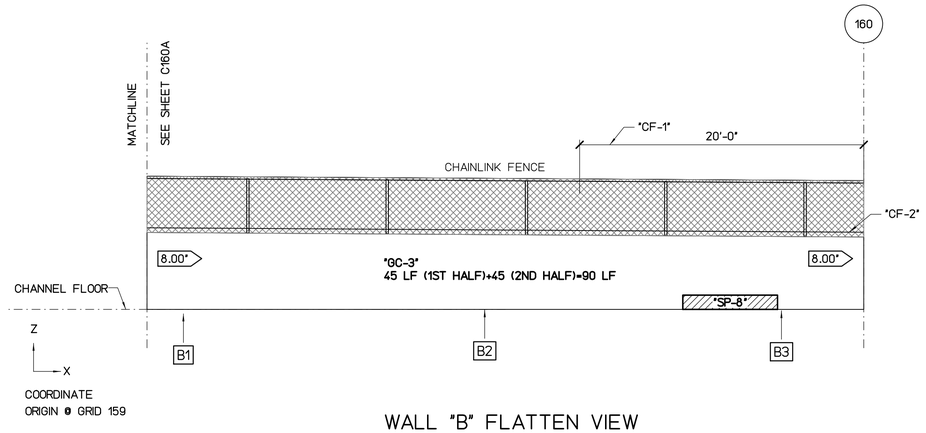


## WALL "B" FLATTEN VIEW

SCALE : 3/16" = 1'-0"

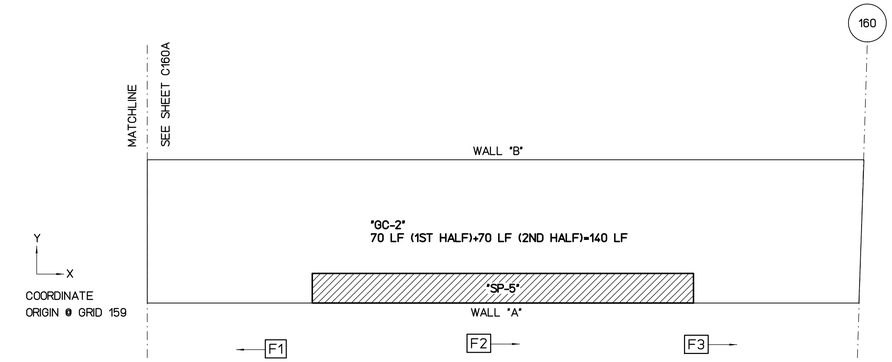


## FLOOR PLAN VIEW

SCALE : 3/16" = 1'-0"

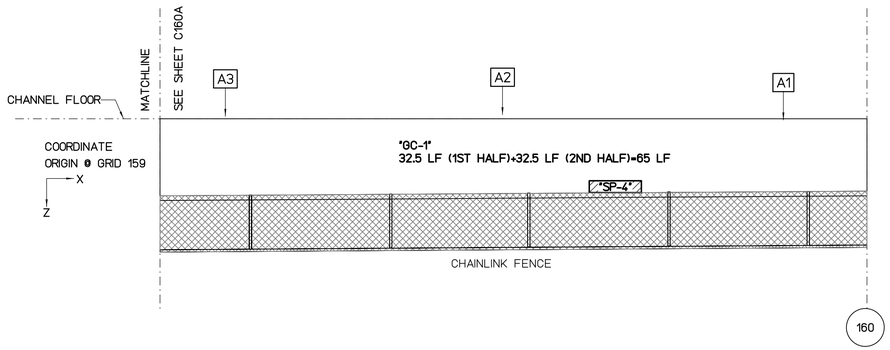


## WALL "A" FLATTEN VIEW

SCALE : 3/16" = 1'-0"

REPAIR LEGEND AND NOTES:

- 2 — CRACK AND SPALL REPAIR TYPES, SEE SHEETS SR201 AND SR202 FOR DETAILS. TYPE [*] INDICATES NO-REPAIR
- (A) — CHAINLINK FENCE REPAIR TYPES, SEE SHEETS SF201 AND SF202 FOR DETAILS
- 1.0 — TOP OF WALL LEANING DISTANCE TOWARD CHANNEL IN INCHES, SEE SHEETS SL101 TO SL207 FOR CONCRETE LINING

PHOTO LEGEND:

- A1 — WALL "A" ELEVATION PHOTO IDENTIFICATION SEE FLATTEN VIEW FOR PHOTO LOCATION
- B1 — WALL "B" ELEVATION PHOTO IDENTIFICATION SEE FLATTEN VIEW FOR PHOTO LOCATION
- F1 — CHANNEL FLOOR PHOTO IDENTIFICATION SEE FLOOR PLAN VIEW FOR PHOTO LOCATION

B1



B2



B3



F1



F2



F3



A1



A2



A3



### SPALL REPAIR CHART

| MARK | LOCATION | REPAIR TYPE | SPALL DIMENSION L | SPALL DIMENSION W | SPALL DIMENSION D | SPALL VOLUME | SPALL CENTER COORDINATE X | SPALL CENTER COORDINATE Y OR Z | RATING |
|---|---|---|---|---|---|---|---|---|---|
| "SP-1" | WALL "A" | [*] | 16 | 6 | 3 | 288 | 0.7 | 1 | 7 |
| "SP-2" | WALL "A" | [*] | 21 | 6 | 2 | 252 | 3 | 5 | 7 |
| "SP-3" | WALL "A" | [*] | 40 | 14 | 2 | 1120 | 43.5 | 4.6 | 7 |
| "SP-4" | WALL "A" | [*] | 44 | 10 | 2 | 880 | 84 | 5 | 7 |
| "SP-5" | FLOOR | [*] | 322 | 25 | 3 | 24150 | 77 | 1 | 7 |
| "SP-6" | WALL "B" | [*] | 66 | 7 | 8 | 3696 | 2.8 | 2.5 | 5 |
| "SP-7" | WALL "B" | [*] | 30 | 17 | 4 | 2040 | 15 | 4.6 | 6 |
| "SP-8" | WALL "B" | [*] | 80 | 12 | 4 | 3840 | 93 | 0.5 | 6 |

### CHAINLINK FENCE REPAIR CHART

| MARK | LOCATION | REPAIR TYPE | POSTS | TOP RAIL | BOTTOM WIRE | BRACE | FABRIC |
|---|---|---|---|---|---|---|---|
| "CF-1" | WALL "B" | (C) | - | DAMAGED 20' | - | - | - |
| "CF-2" | WALL "B" | (D) | - | - | DAMAGED 50' | - | - |
| | | | | | | | |
| | | | | | | | |
| | | | | | | | |
| | | | | | | | |
| | | | | | | | |
| | | | | | | | |
| | | | | | | | |

### CRACK REPAIR CHART

| MARK | LOCATION | REPAIR TYPE | GENERAL CRACKS (LF) | MAJOR CRACKS WIDTH (IN) | MAJOR CRACKS LENGTH (FT) | MAJOR CRACKS START PNT X | MAJOR CRACKS START PNT Y,Z | MAJOR CRACKS END PNT X | MAJOR CRACKS END PNT Y,Z | RATING |
|---|---|---|---|---|---|---|---|---|---|---|
| "MC-1" | WALL "A" | [*] | - | 0.19 | 4 | 13 | 1 | 14 | 5.5 | 7 |
| "GC-1" | WALL "A" | [*] | 65 | - | - | - | - | - | - | 8 |
| "GC-2" | FLOOR | [*] | 140 | - | - | - | - | - | - | 8 |
| "GC-3" | WALL "B" | [*] | 90 | - | - | - | - | - | - | 8 |
| | | | | | | | | | | |
| | | | | | | | | | | |
| | | | | | | | | | | |

NOTES:

1- CONCRETE LINING IS PROVIDED IN THIS SEGMENT SEE SHEET SL206

2- THERE IS NO SPALL AND CRACK REPAIRS IN THIS SEGMENT

GRAPHIC SCALES:

0 1' 2' 4' 8' 12' 16'

3/16"=1'-0"

| REVISION NO. | DATE | REVISIONS | BY |
|---|---|---|---|

ATHER R. DAR
LICENSED PROFESSIONAL ENGINEER
No. 7808-S
HAWAII U.S.A.

Exp. Date: 4-30-20

THIS WORK WAS PREPARED BY ME OR UNDER MY SUPERVISION AND CONSTRUCTION OF THIS PROJECT WILL BE UNDER MY OBSERVATION

DEPARTMENT OF HAWAIIAN HOMELAND

# NANAKULI FLOOD CONTROL CHANNEL IMPROVEMENTS NANAKULI VALLEY, OAHU HAWAII

CHANNEL SEGMENT 160 REPAIR DETAILS - 2ND HALF

DESIGNED BY: TTP
DRAWN BY: AK, AP, DL
CHECKED BY: AD
SUPV:
DATE: 03/05/2019

HAWAII ENGINEERING GROUP, Inc.
Civil & Structural Engineers
1088 BISHOP STREET #2506
HONOLULU, HI 96813
Tel: 808-533-2092

JOB NO.

SHEET C160B

183OF 225 SHTS

FILE ___ DRAWER ___ ___ FOLDER ___ ___

Plot date: 15-Apr-2020

Full Size Plot

Plot date: 15-Apr-2020
Full Size Plot

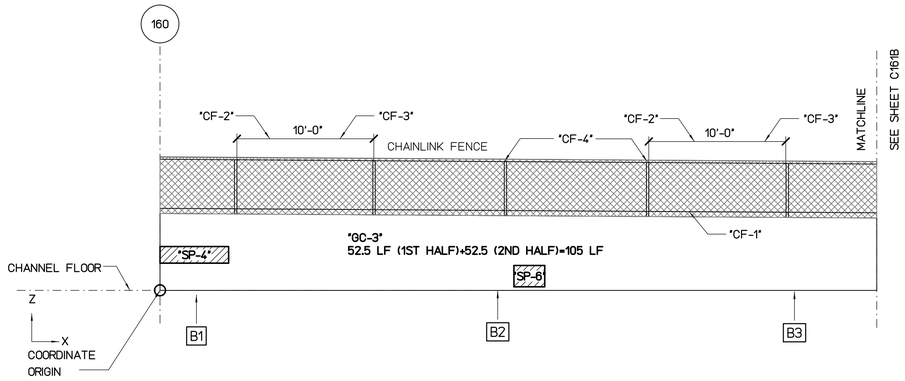


## WALL "B" FLATTEN VIEW

SCALE : 3/16" = 1'-0"

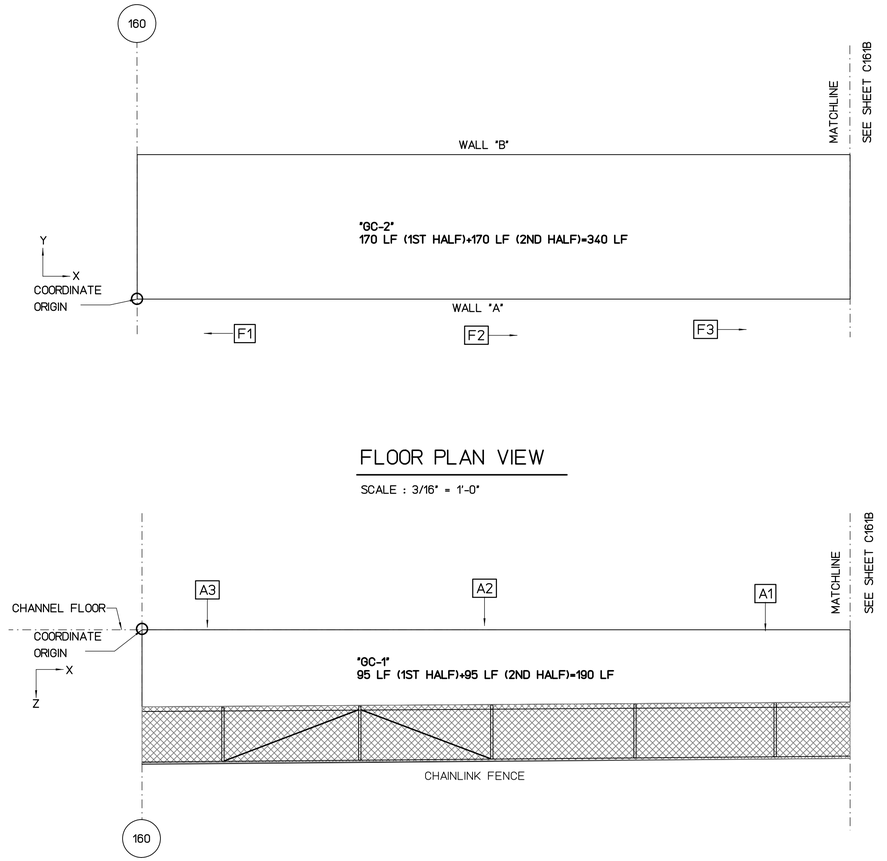


## FLOOR PLAN VIEW

SCALE : 3/16" = 1'-0"




## WALL "A" FLATTEN VIEW

SCALE : 3/16" = 1'-0"

REPAIR LEGEND AND NOTES:

- 2 — CRACK AND SPALL REPAIR TYPES, SEE SHEETS SR201 AND SR202 FOR DETAILS. TYPE ⊠ INDICATES NO-REPAIR
- Ⓐ — CHAINLINK FENCE REPAIR TYPES, SEE SHEETS SF201 AND SF202 FOR DETAILS
- 1.0 — TOP OF WALL LEANING DISTANCE TOWARD CHANNEL IN INCHES, SEE SHEETS SL101 TO SL207 FOR CONCRETE LINING

PHOTO LEGEND:

- A1 — WALL "A" ELEVATION PHOTO IDENTIFICATION SEE FLATTEN VIEW FOR PHOTO LOCATION
- B1 — WALL "B" ELEVATION PHOTO IDENTIFICATION SEE FLATTEN VIEW FOR PHOTO LOCATION
- F1 — CHANNEL FLOOR PHOTO IDENTIFICATION SEE FLOOR PLAN VIEW FOR PHOTO LOCATION

B1



B2



B3



F1



F2



F3



A1



A2



A3



### SPALL REPAIR CHART

| MARK | LOCATION | REPAIR TYPE | SPALL DIMENSION L | SPALL DIMENSION W | SPALL DIMENSION D | SPALL VOLUME | SPALL CENTER COORDINATE X | SPALL CENTER COORDINATE Y OR Z | RATING |
|---|---|---|---|---|---|---|---|---|---|
| "SP-1" | WALL "A" | ⊠ | 32 | 10 | 3 | 960 | 74 | 4 | 7 |
| "SP-2" | FLOOR | ⊠ | 48 | 42 | 3 | 6048 | 62 | 4 | 7 |
| "SP-3" | FLOOR | ⊠ | 114 | 66 | 3 | 22572 | 70 | 4 | 7 |
| "SP-4" | WALL "B" | ⊠ | 58 | 14 | 8 | 6496 | 0 | 2.5 | 5 |
| "SP-5" | WALL "B" | ⊠ | 22 | 22 | 3 | 1452 | 66 | 1 | 7 |
| "SP-6" | WALL "B" | ⊠ | 26 | 18 | 3 | 1404 | 26 | 1 | 7 |

### CHAINLINK FENCE REPAIR CHART

| MARK | LOCATION | REPAIR TYPE | POSTS | TOP RAIL | BOTTOM WIRE | BRACE | FABRIC |
|---|---|---|---|---|---|---|---|
| "CF-1" | WALL "B" | Ⓓ | - | - | DAMAGED 50' | - | - |
| "CF-2" | WALL "B" | Ⓒ | - | DAMAGED 20' | - | - | - |
| "CF-3" | WALL "B" | Ⓔ | - | - | - | - | DAMAGED 20'x4' |
| "CF-4" | WALL "B" | Ⓐ | DAMAGED 2 | - | - | - | - |

### CRACK REPAIR CHART

| MARK | LOCATION | REPAIR TYPE | GENERAL CRACKS (LF) | MAJOR CRACKS WIDTH (IN) | MAJOR CRACKS LENGTH (FT) | MAJOR CRACKS START PNT X | MAJOR CRACKS START PNT Y,Z | MAJOR CRACKS END PNT X | MAJOR CRACKS END PNT Y,Z | RATING |
|---|---|---|---|---|---|---|---|---|---|---|
| "GC-1" | WALL "A" | ⊠ | 190 | - | - | - | - | - | - | 8 |
| "GC-2" | FLOOR | ⊠ | 340 | - | - | - | - | - | - | 8 |
| "GC-3" | WALL "B" | ⊠ | 105 | - | - | - | - | - | - | 8 |

NOTES:

1- CONCRETE LINING IS PROVIDED IN THIS SEGMENT SEE SHEET SL206

2- THERE IS NO SPALL AND CRACK REPAIRS IN THIS SEGMENT

GRAPHIC SCALES:

0 1' 2' 4' 8' 12' 16'

3/16"=1'-0"

| REVISION NO. | DATE | REVISIONS | BY |
|---|---|---|---|

ATHER R. DAR
LICENSED PROFESSIONAL ENGINEER
No. 7808-S
HAWAII U.S.A.
Exp. Date: 4-30-20

THIS WORK WAS PREPARED BY ME OR UNDER MY SUPERVISION AND CONSTRUCTION OF THIS PROJECT WILL BE UNDER MY OBSERVATION

DEPARTMENT OF HAWAIIAN HOMELAND

# NANAKULI FLOOD CONTROL CHANNEL IMPROVEMENTS NANAKULI VALLEY, OAHU HAWAII

CHANNEL SEGMENT 161 REPAIR DETAILS - 1ST HALF

| | |
|---|---|
| DESIGNED BY: | TTP |
| DRAWN BY: | AK, AP, DL |
| CHECKED BY: | AD |
| SUPV: | |
| DATE: | 03/05/2019 |

HAWAII ENGINEERING GROUP, Inc.
Civil & Structural Engineers
1088 BISHOP STREET #2506
HONOLULU, HI 96813
Tel: 808-533-2092

JOB NO.

SHEET C161A

184 OF 225 SHTS

FILE ___ DRAWER ___ ___ FOLDER ___ ___

Plot date: 15-Apr-2020
Full Size Plot

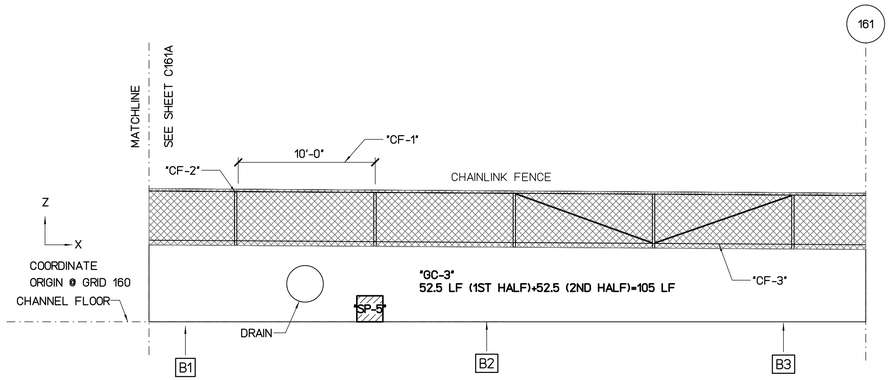


## WALL "B" FLATTEN VIEW

SCALE : 3/16" = 1'-0"

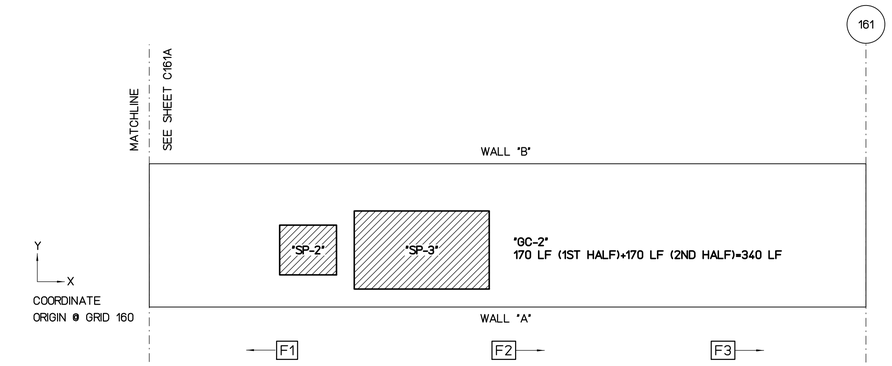


## FLOOR PLAN VIEW

SCALE : 3/16" = 1'-0"

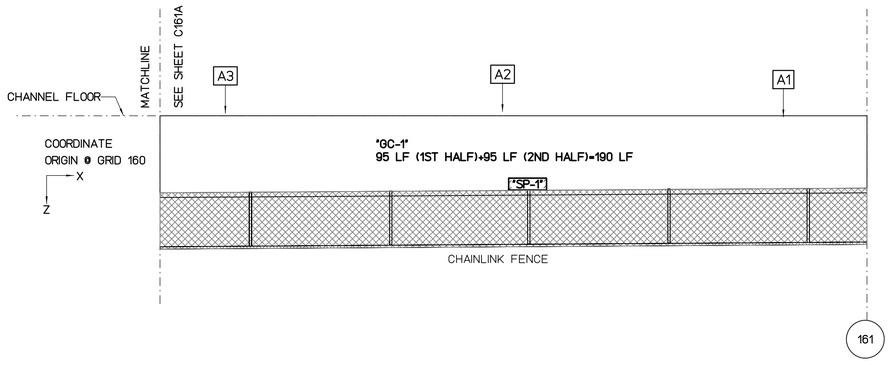


## WALL "A" FLATTEN VIEW

SCALE : 3/16" = 1'-0"

REPAIR LEGEND AND NOTES:

- 2 — CRACK AND SPALL REPAIR TYPES, SEE SHEETS SR201 AND SR202 FOR DETAILS. TYPE [*] INDICATES NO-REPAIR
- (A) — CHAINLINK FENCE REPAIR TYPES, SEE SHEETS SF201 AND SF202 FOR DETAILS
- 1.0 — TOP OF WALL LEANING DISTANCE TOWARD CHANNEL IN INCHES, SEE SHEETS SL101 TO SL207 FOR CONCRETE LINING

PHOTO LEGEND:

- A1 — WALL "A" ELEVATION PHOTO IDENTIFICATION SEE FLATTEN VIEW FOR PHOTO LOCATION
- B1 — WALL "B" ELEVATION PHOTO IDENTIFICATION SEE FLATTEN VIEW FOR PHOTO LOCATION
- F1 — CHANNEL FLOOR PHOTO IDENTIFICATION SEE FLOOR PLAN VIEW FOR PHOTO LOCATION

B1



B2



B3



F1



F2



F3



A1



A2



A3



### SPALL REPAIR CHART

| MARK | LOCATION | REPAIR TYPE | SPALL DIMENSION L | SPALL DIMENSION W | SPALL DIMENSION D | SPALL VOLUME | SPALL CENTER COORDINATE X | SPALL CENTER COORDINATE Y OR Z | RATING |
|---|---|---|---|---|---|---|---|---|---|
| "SP-1" | WALL "A" | [*] | 32 | 10 | 3 | 960 | 74 | 4 | 7 |
| "SP-2" | FLOOR | [*] | 48 | 42 | 3 | 6048 | 62 | 4 | 7 |
| "SP-3" | FLOOR | [*] | 114 | 66 | 3 | 22572 | 70 | 4 | 7 |
| "SP-4" | WALL "B" | [*] | 58 | 14 | 8 | 6496 | 0 | 2.5 | 5 |
| "SP-5" | WALL "B" | [*] | 22 | 22 | 3 | 1452 | 66 | 1 | 7 |
| "SP-6" | WALL "B" | [*] | 26 | 18 | 3 | 1404 | 26 | 1 | 7 |

### CHAINLINK FENCE REPAIR CHART

| MARK | LOCATION | REPAIR TYPE | POSTS | TOP RAIL | BOTTOM WIRE | BRACE | FABRIC |
|---|---|---|---|---|---|---|---|
| "CF-1" | WALL "B" | (E) | - | - | - | - | DAMAGED 10'x4' |
| "CF-2" | WALL "B" | (A) | DAMAGED 1 | - | - | - | - |
| "CF-3" | WALL "B" | (D) | - | - | DAMAGED 50' | - | - |

### CRACK REPAIR CHART

| MARK | LOCATION | REPAIR TYPE | GENERAL CRACKS (LF) | MAJOR CRACKS WIDTH (IN) | MAJOR CRACKS LENGTH (FT) | MAJOR CRACKS START PNT X | MAJOR CRACKS START PNT Y,Z | MAJOR CRACKS END PNT X | MAJOR CRACKS END PNT Y,Z | RATING |
|---|---|---|---|---|---|---|---|---|---|---|
| "GC-1" | WALL "A" | [*] | 190 | - | - | - | - | - | - | 8 |
| "GC-2" | FLOOR | [*] | 340 | - | - | - | - | - | - | 8 |
| "GC-3" | WALL "B" | [*] | 105 | - | - | - | - | - | - | 8 |

NOTES:

1- CONCRETE LINING IS PROVIDED IN THIS SEGMENT SEE SHEET SL206

2- THERE IS NO SPALL AND CRACK REPAIRS IN THIS SEGMENT

GRAPHIC SCALES:

0 1' 2' 4' 8' 12' 16'

3/16"=1'-0"

| REVISION NO. | DATE | REVISIONS | BY |
|---|---|---|---|

ATHER R. DAR
LICENSED PROFESSIONAL ENGINEER
No. 7808-S
HAWAII U.S.A.

Exp. Date: 4-30-20

THIS WORK WAS PREPARED BY ME OR UNDER MY SUPERVISION AND CONSTRUCTION OF THIS PROJECT WILL BE UNDER MY OBSERVATION

DEPARTMENT OF HAWAIIAN HOMELAND

# NANAKULI FLOOD CONTROL CHANNEL IMPROVEMENTS NANAKULI VALLEY, OAHU HAWAII

CHANNEL SEGMENT 161 REPAIR DETAILS - 2ND HALF

DESIGNED BY: TTP
DRAWN BY: AK, AP, DL
CHECKED BY: AD
SUPV:
DATE: 03/05/2019

HAWAII ENGINEERING GROUP, Inc.
Civil & Structural Engineers
1088 BISHOP STREET #2506
HONOLULU, HI 96813
Tel: 808-533-2092

JOB NO.

SHEET C161B

185 OF 225 SHTS

FILE ___ DRAWER ___ ___ FOLDER ___ ___

Plot date: 15-Apr-2020
Full Size Plot

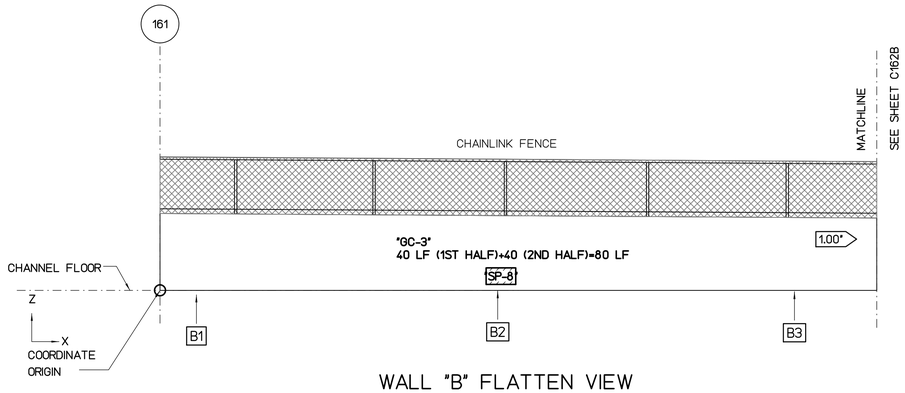


## WALL "B" FLATTEN VIEW

SCALE : 3/16" = 1'-0"

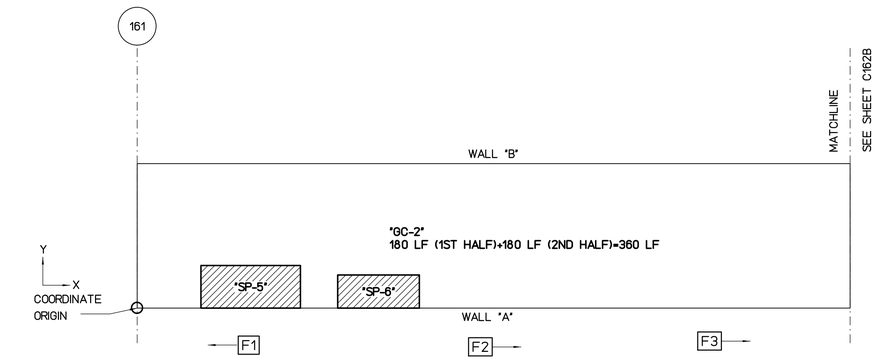


## FLOOR PLAN VIEW

SCALE : 3/16" = 1'-0"

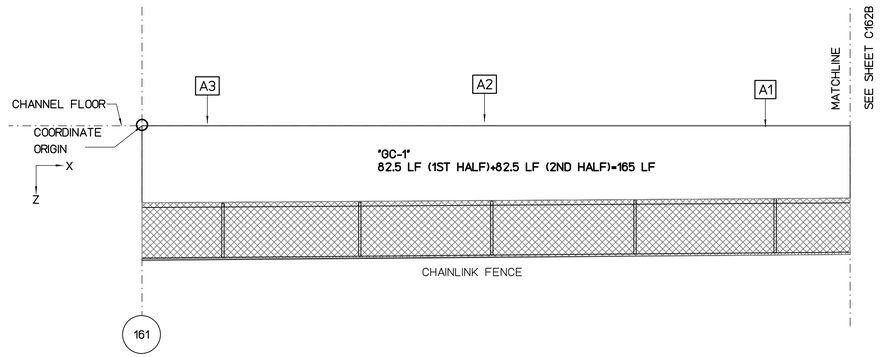


## WALL "A" FLATTEN VIEW

SCALE : 3/16" = 1'-0"

REPAIR LEGEND AND NOTES:

- [2] CRACK AND SPALL REPAIR TYPES, SEE SHEETS SR201 AND SR202 FOR DETAILS. TYPE [*] INDICATES NO-REPAIR
- (A) CHAINLINK FENCE REPAIR TYPES, SEE SHEETS SF201 AND SF202 FOR DETAILS
- 1.0> TOP OF WALL LEANING DISTANCE TOWARD CHANNEL IN INCHES, SEE SHEETS SL101 TO SL207 FOR CONCRETE LINING

PHOTO LEGEND:

- [A1] WALL "A" ELEVATION PHOTO IDENTIFICATION SEE FLATTEN VIEW FOR PHOTO LOCATION
- [B1] WALL "B" ELEVATION PHOTO IDENTIFICATION SEE FLATTEN VIEW FOR PHOTO LOCATION
- [F1] CHANNEL FLOOR PHOTO IDENTIFICATION SEE FLOOR PLAN VIEW FOR PHOTO LOCATION

B1



B2



B3



F1



F2



F3



A1



A2



A3



### SPALL REPAIR CHART

| MARK | LOCATION | REPAIR TYPE | SPALL DIMENSION L | W | D | SPALL VOLUME | SPALL CENTER COORDINATE X | Y OR Z | RATING |
|---|---|---|---|---|---|---|---|---|---|
| "SP-1" | WALL "A" | [*] | 28 | 6 | 3 | 504 | 53 | 4 | 7 |
| "SP-2" | WALL "A" | [*] | 162 | 9 | 3 | 4374 | 80 | 4 | 7 |
| "SP-3" | WALL "A" | [*] | 24 | 7 | 3 | 504 | 90 | 4 | 7 |
| "SP-4" | WALL "A" | [*] | 44 | 9 | 3 | 1188 | 93 | 4 | 7 |
| "SP-5" | FLOOR | [*] | 84 | 36 | 3 | 9072 | 8 | 1 | 7 |
| "SP-6" | FLOOR | [*] | 69 | 28 | 3 | 5796 | 17 | 1 | 7 |
| "SP-7" | FLOOR | [*] | 150 | 98 | 3 | 44100 | 62 | 4 | 7 |
| "SP-8" | WALL "B" | [*] | 25 | 14 | 3 | 1050 | 24 | 1 | 7 |
| "SP-9" | WALL "B" | [*] | 54 | 10 | 3 | 1620 | 82 | 4 | 7 |

### CHAINLINK FENCE REPAIR CHART

| MARK | LOCATION | REPAIR TYPE | POSTS | TOP RAIL | BOTTOM WIRE | BRACE | FABRIC |
|---|---|---|---|---|---|---|---|
| | | | | | | | |
| | | | | | | | |
| | | | | | | | |
| | | | | | | | |
| | | | | | | | |
| | | | | | | | |
| | | | | | | | |
| | | | | | | | |
| | | | | | | | |
| | | | | | | | |

### CRACK REPAIR CHART

| MARK | LOCATION | REPAIR TYPE | GENERAL CRACKS (LF) | MAJOR CRACKS WIDTH (IN) | LENGTH (FT) | START PNT X | START PNT Y,Z | END PNT X | END PNT Y,Z | RATING |
|---|---|---|---|---|---|---|---|---|---|---|
| "GC-1" | WALL "A" | [*] | 165 | - | - | - | - | - | - | 8 |
| "GC-2" | FLOOR | [*] | 360 | - | - | - | - | - | - | 8 |
| "GC-3" | WALL "B" | [*] | 80 | - | - | - | - | - | - | 8 |
| | | | | | | | | | | |
| | | | | | | | | | | |
| | | | | | | | | | | |
| | | | | | | | | | | |

NOTES:

1- CONCRETE LINING IS PROVIDED IN THIS SEGMENT SEE SHEET SL206

2- THERE IS NO SPALL AND CRACK REPAIRS IN THIS SEGMENT

GRAPHIC SCALES:

0 1' 2' 4' 8' 12' 16'

3/16"=1'-0"

| REVISION NO. | DATE | REVISIONS | BY |
|---|---|---|---|
| | | | |

ATHER R. DAR
LICENSED PROFESSIONAL ENGINEER
No. 7808-S
HAWAII U.S.A.

Exp. Date: 4-30-20

THIS WORK WAS PREPARED BY ME OR UNDER MY SUPERVISION AND CONSTRUCTION OF THIS PROJECT WILL BE UNDER MY OBSERVATION

DEPARTMENT OF HAWAIIAN HOMELAND

# NANAKULI FLOOD CONTROL CHANNEL IMPROVEMENTS NANAKULI VALLEY, OAHU HAWAII

CHANNEL SEGMENT [162] REPAIR DETAILS - 1ST HALF

| | |
|---|---|
| DESIGNED BY: | TTP |
| DRAWN BY: | AK, AP, DL |
| CHECKED BY: | AD |
| SUPV: | |
| DATE: | 03/05/2019 |

HAWAII ENGINEERING GROUP, Inc.
Civil & Structural Engineers
1088 BISHOP STREET #2506
HONOLULU, HI 96813
Tel: 808-533-2092

JOB NO.

SHEET C162A

186OF 225 SHTS

FILE ___ DRAWER ___ ___ FOLDER ___ ___

Plot date: 15-Apr-2020
Full Size Plot

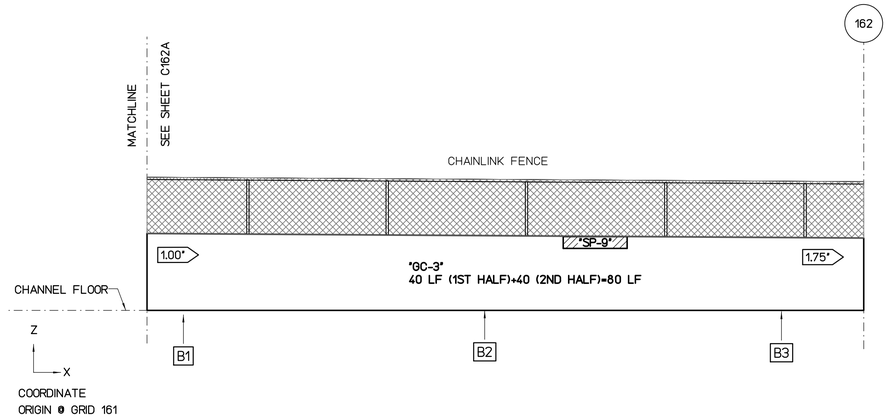


## WALL "B" FLATTEN VIEW

SCALE : 3/16" = 1'-0"

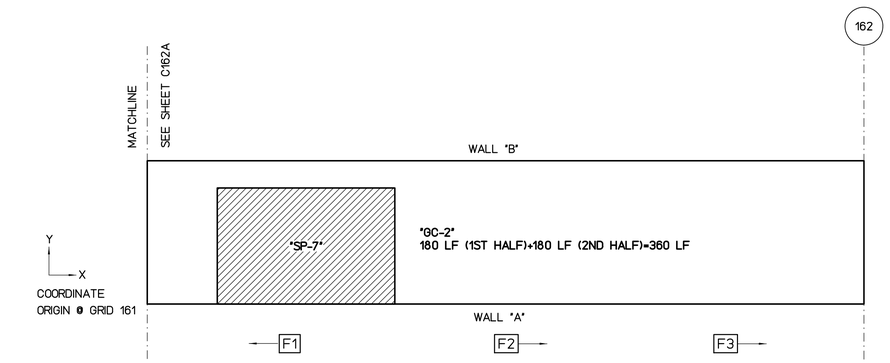


## FLOOR PLAN VIEW

SCALE : 3/16" = 1'-0"

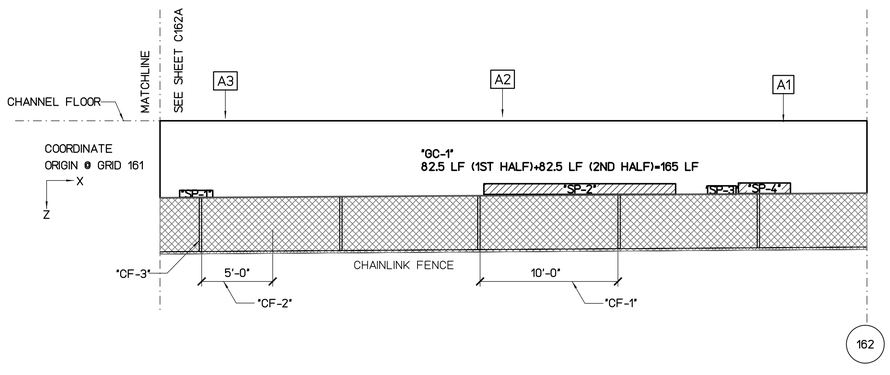


## WALL "A" FLATTEN VIEW

SCALE : 3/16" = 1'-0"

REPAIR LEGEND AND NOTES:

- [2] CRACK AND SPALL REPAIR TYPES, SEE SHEETS SR201 AND SR202 FOR DETAILS. TYPE [*] INDICATES NO-REPAIR
- (A) CHAINLINK FENCE REPAIR TYPES, SEE SHEETS SF201 AND SF202 FOR DETAILS
- [1.0>] TOP OF WALL LEANING DISTANCE TOWARD CHANNEL IN INCHES, SEE SHEETS SL101 TO SL207 FOR CONCRETE LINING

PHOTO LEGEND:

- [A1] WALL "A" ELEVATION PHOTO IDENTIFICATION SEE FLATTEN VIEW FOR PHOTO LOCATION
- [B1] WALL "B" ELEVATION PHOTO IDENTIFICATION SEE FLATTEN VIEW FOR PHOTO LOCATION
- [F1] CHANNEL FLOOR PHOTO IDENTIFICATION SEE FLOOR PLAN VIEW FOR PHOTO LOCATION

B1



B2



B3



F1



F2



F3



A1



A2



A3



### SPALL REPAIR CHART

| MARK | LOCATION | REPAIR TYPE | SPALL DIMENSION L | SPALL DIMENSION W | SPALL DIMENSION D | SPALL VOLUME | SPALL CENTER COORDINATE X | SPALL CENTER COORDINATE Y OR Z | RATING |
|---|---|---|---|---|---|---|---|---|---|
| "SP-1" | WALL "A" | [*] | 28 | 6 | 3 | 504 | 53 | 4 | 7 |
| "SP-2" | WALL "A" | [*] | 162 | 9 | 3 | 4374 | 80 | 4 | 7 |
| "SP-3" | WALL "A" | [*] | 24 | 7 | 3 | 504 | 90 | 4 | 7 |
| "SP-4" | WALL "A" | [*] | 44 | 9 | 3 | 1188 | 93 | 4 | 7 |
| "SP-5" | FLOOR | [*] | 84 | 36 | 3 | 9072 | 8 | 1 | 7 |
| "SP-6" | FLOOR | [*] | 69 | 28 | 3 | 5796 | 17 | 1 | 7 |
| "SP-7" | FLOOR | [*] | 150 | 98 | 3 | 44100 | 62 | 4 | 7 |
| "SP-8" | WALL "B" | [*] | 25 | 14 | 3 | 1050 | 24 | 1 | 7 |
| "SP-9" | WALL "B" | [*] | 54 | 10 | 3 | 1620 | 82 | 4 | 7 |

### CHAINLINK FENCE REPAIR CHART

| MARK | LOCATION | REPAIR TYPE | POSTS | TOP RAIL | BOTTOM WIRE | BRACE | FABRIC |
|---|---|---|---|---|---|---|---|
| "CF-1" | WALL "A" | (E) | - | - | - | - | DAMAGED 10'x4' |
| "CF-2" | WALL "A" | (E) | - | - | - | - | DAMAGED 5'x4' |
| "CF-3" | WALL "A" | (A) | BENT 1 | - | - | - | - |

### CRACK REPAIR CHART

| MARK | LOCATION | REPAIR TYPE | GENERAL CRACKS (LF) | MAJOR CRACKS WIDTH (IN) | MAJOR CRACKS LENGTH (FT) | MAJOR CRACKS START PNT X | MAJOR CRACKS START PNT Y,Z | MAJOR CRACKS END PNT X | MAJOR CRACKS END PNT Y,Z | RATING |
|---|---|---|---|---|---|---|---|---|---|---|
| "GC-1" | WALL "A" | [*] | 165 | - | - | - | - | - | - | 8 |
| "GC-2" | FLOOR | [*] | 360 | - | - | - | - | - | - | 8 |
| "GC-3" | WALL "B" | [*] | 80 | - | - | - | - | - | - | 8 |

NOTES:

1- CONCRETE LINING IS PROVIDED IN THIS SEGMENT SEE SHEET SL206

2- THERE IS NO SPALL AND CRACK REPAIRS IN THIS SEGMENT

GRAPHIC SCALES:

0 1' 2' 4' 8' 12' 16'

3/16"=1'-0"

| REVISION NO. | DATE | REVISIONS | BY |
|---|---|---|---|

ATHER R. DAR
LICENSED PROFESSIONAL ENGINEER
No. 7808-S
HAWAII U.S.A.
Exp. Date: 4-30-20

THIS WORK WAS PREPARED BY ME OR UNDER MY SUPERVISION AND CONSTRUCTION OF THIS PROJECT WILL BE UNDER MY OBSERVATION

DEPARTMENT OF HAWAIIAN HOMELAND

# NANAKULI FLOOD CONTROL CHANNEL IMPROVEMENTS NANAKULI VALLEY, OAHU HAWAII

CHANNEL SEGMENT [162] REPAIR DETAILS - 2ND HALF

| | |
|---|---|
| DESIGNED BY: | TTP |
| DRAWN BY: | AK, AP, DL |
| CHECKED BY: | AD |
| SUPV: | |
| DATE: | 03/05/2019 |

HAWAII ENGINEERING GROUP, Inc.
Civil & Structural Engineers
1088 BISHOP STREET #2506
HONOLULU, HI 96813
Tel: 808-533-2092

JOB NO.

SHEET C162B

187 OF 225 SHTS

FILE ___ ___ DRAWER ___ ___ ___ FOLDER ___ ___

Plot date: 15-Apr-2020
Full Size Plot

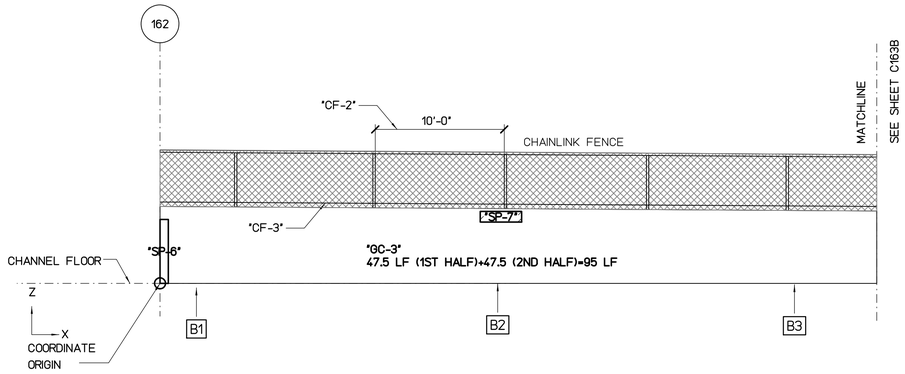


## WALL "B" FLATTEN VIEW

SCALE : 3/16" = 1'-0"

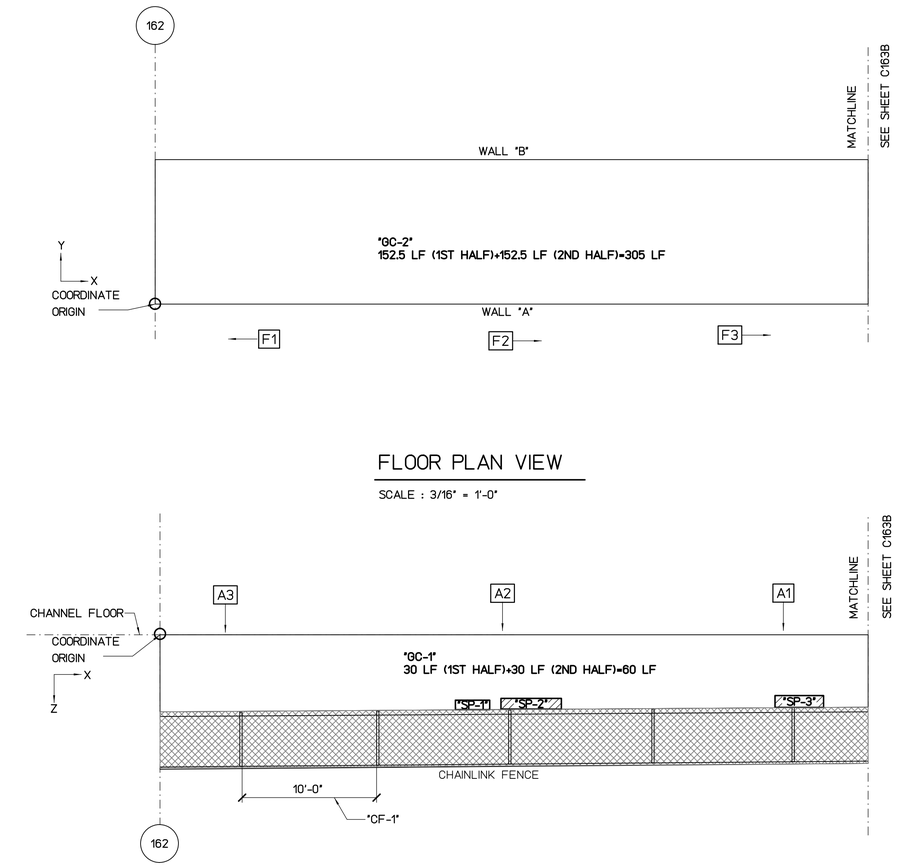


## FLOOR PLAN VIEW

SCALE : 3/16" = 1'-0"

## WALL "A" FLATTEN VIEW

SCALE : 3/16" = 1'-0"

REPAIR LEGEND AND NOTES:

- [2] CRACK AND SPALL REPAIR TYPES, SEE SHEETS SR201 AND SR202 FOR DETAILS. TYPE [*] INDICATES NO-REPAIR
- (A) CHAINLINK FENCE REPAIR TYPES, SEE SHEETS SF201 AND SF202 FOR DETAILS
- 1.0> TOP OF WALL LEANING DISTANCE TOWARD CHANNEL IN INCHES, SEE SHEETS SL101 TO SL207 FOR CONCRETE LINING

PHOTO LEGEND:

- [A1] WALL "A" ELEVATION PHOTO IDENTIFICATION SEE FLATTEN VIEW FOR PHOTO LOCATION
- [B1] WALL "B" ELEVATION PHOTO IDENTIFICATION SEE FLATTEN VIEW FOR PHOTO LOCATION
- [F1] CHANNEL FLOOR PHOTO IDENTIFICATION SEE FLOOR PLAN VIEW FOR PHOTO LOCATION

B1



B2



B3



F1



F2



F3



A1



A2



A3



### SPALL REPAIR CHART

| MARK | LOCATION | REPAIR TYPE | SPALL DIMENSION L | SPALL DIMENSION W | SPALL DIMENSION D | SPALL VOLUME | SPALL CENTER COORDINATE X | SPALL CENTER COORDINATE Y OR Z | RATING |
|---|---|---|---|---|---|---|---|---|---|
| "SP-1" | WALL "A" | 3 | 29 | 8 | 3 | 696 | 22 | 4 | 7 |
| "SP-2" | WALL "A" | 3 | 51 | 9 | 4 | 1836 | 27 | 4 | 7 |
| "SP-3" | WALL "A" | 3 | 41 | 10 | 3 | 1230 | 45 | 4 | 7 |
| "SP-4" | WALL "A" | 3 | 54 | 14 | 4 | 3024 | 98 | 4 | 7 |
| "SP-5" | FLOOR | 3 | 109 | 64 | 3 | 20928 | 92 | 7 | 7 |
| "SP-6" | WALL "B" | 3 | 7 | 54 | 4 | 1512 | 2.3 | 2 | 7 |
| "SP-7" | WALL "B" | 3 | 35 | 9 | 3 | 945 | 22 | 4 | 7 |
| "SP-8" | WALL "B" | 3 | 26 | 7 | 3 | 546 | 80 | 4 | 7 |

### CHAINLINK FENCE REPAIR CHART

| MARK | LOCATION | REPAIR TYPE | POSTS | TOP RAIL | BOTTOM WIRE | BRACE | FABRIC |
|---|---|---|---|---|---|---|---|
| "CF-1" | WALL "A" | (E) | - | - | - | - | DAMAGED 10'x4' |
| "CF-2" | WALL "B" | (E) | - | - | - | - | DAMAGED 10'x4' |
| "CF-3" | WALL "B" | (D) | - | - | DAMAGED 50' | - | - |

### CRACK REPAIR CHART

| MARK | LOCATION | REPAIR TYPE | GENERAL CRACKS (LF) | MAJOR CRACKS WIDTH (IN) | MAJOR CRACKS LENGTH (FT) | MAJOR CRACKS START PNT X | MAJOR CRACKS START PNT Y,Z | MAJOR CRACKS END PNT X | MAJOR CRACKS END PNT Y,Z | RATING |
|---|---|---|---|---|---|---|---|---|---|---|
| "MC-1" | WALL "A" | 1 | - | 0.19 | 4 | 54 | 1.5 | 54.5 | 4.5 | 7 |
| "GC-1" | WALL "A" | * | 60 | - | - | - | - | - | - | 8 |
| "GC-2" | FLOOR | * | 305 | - | - | - | - | - | - | 8 |
| "GC-3" | WALL "B" | * | 95 | - | - | - | - | - | - | 8 |

GRAPHIC SCALES:

0 1' 2' 4' 8' 12' 16'

3/16"=1'-0"

| REVISION NO. | DATE | REVISIONS | BY |
|---|---|---|---|

ATHER R. DAR
LICENSED PROFESSIONAL ENGINEER
No. 7808-S
HAWAII U.S.A.

Exp. Date: 4-30-20

THIS WORK WAS PREPARED BY ME OR UNDER MY SUPERVISION AND CONSTRUCTION OF THIS PROJECT WILL BE UNDER MY OBSERVATION

DEPARTMENT OF HAWAIIAN HOMELAND

# NANAKULI FLOOD CONTROL CHANNEL IMPROVEMENTS NANAKULI VALLEY, OAHU HAWAII

## CHANNEL SEGMENT 163 REPAIR DETAILS - 1ST HALF

| | |
|---|---|
| DESIGNED BY: | TTP |
| DRAWN BY: | AK, AP, DL |
| CHECKED BY: | AD |
| SUPV: | |
| DATE: | 03/05/2019 |

HAWAII ENGINEERING GROUP, Inc.
Civil & Structural Engineers
1088 BISHOP STREET #2506
HONOLULU, HI 96813
Tel: 808-533-2092

JOB NO.

SHEET C163A

188OF 225 SHTS

FILE ___ DRAWER ___ ___ FOLDER ___ ___

Plot date: 15-Apr-2020
Full Size Plot

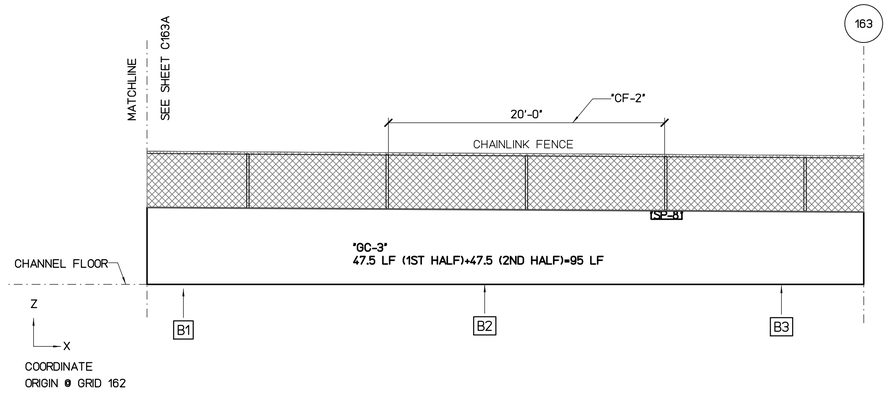


## WALL "B" FLATTEN VIEW

SCALE : 3/16" = 1'-0"

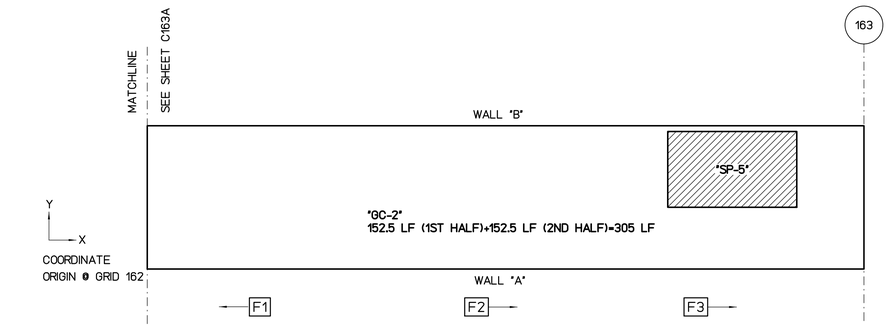


## FLOOR PLAN VIEW

SCALE : 3/16" = 1'-0"

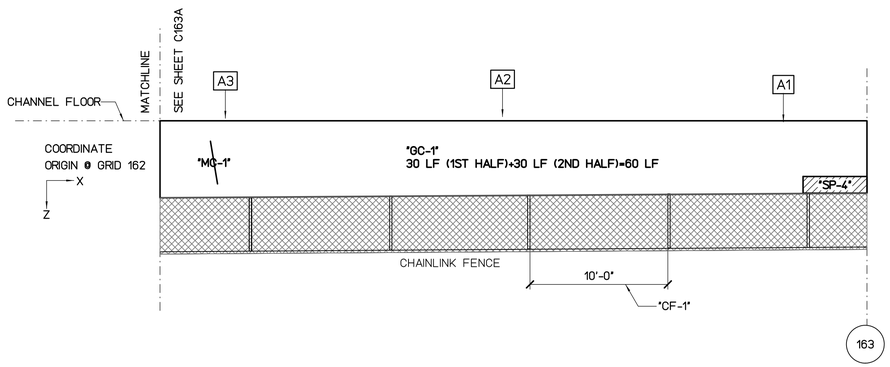


## WALL "A" FLATTEN VIEW

SCALE : 3/16" = 1'-0"

REPAIR LEGEND AND NOTES:

- [2] CRACK AND SPALL REPAIR TYPES, SEE SHEETS SR201 AND SR202 FOR DETAILS. TYPE [*] INDICATES NO-REPAIR
- (A) CHAINLINK FENCE REPAIR TYPES, SEE SHEETS SF201 AND SF202 FOR DETAILS
- 1.0> TOP OF WALL LEANING DISTANCE TOWARD CHANNEL IN INCHES, SEE SHEETS SL101 TO SL207 FOR CONCRETE LINING

PHOTO LEGEND:

- [A1] WALL "A" ELEVATION PHOTO IDENTIFICATION SEE FLATTEN VIEW FOR PHOTO LOCATION
- [B1] WALL "B" ELEVATION PHOTO IDENTIFICATION SEE FLATTEN VIEW FOR PHOTO LOCATION
- [F1] CHANNEL FLOOR PHOTO IDENTIFICATION SEE FLOOR PLAN VIEW FOR PHOTO LOCATION

B1



B2



B3



F1



F2



F3



A1



A2



A3



### SPALL REPAIR CHART

| MARK | LOCATION | REPAIR TYPE | SPALL DIMENSION H | SPALL DIMENSION W | SPALL DIMENSION D | SPALL VOLUME | SPALL CENTER COORDINATE X | SPALL CENTER COORDINATE -64.9 | RATING |
|---|---|---|---|---|---|---|---|---|---|
| "SP-1" | WALL "A" | [3] | 29 | 8 | 3 | 696 | 22 | 4 | 7 |
| "SP-2" | WALL "A" | [3] | 51 | 9 | 4 | 1836 | 27 | 4 | 7 |
| "SP-3" | WALL "A" | [3] | 41 | 10 | 3 | 1230 | 45 | 4 | 7 |
| "SP-4" | WALL "A" | [3] | 54 | 14 | 4 | 3024 | 98 | 4 | 7 |
| "SP-5" | FLOOR | [3] | 109 | 64 | 3 | 20928 | 92 | 7 | 7 |
| "SP-6" | WALL "B" | [3] | 7 | 54 | 4 | 1512 | 2.3 | 2 | 7 |
| "SP-7" | WALL "B" | [3] | 35 | 9 | 3 | 945 | 22 | 4 | 7 |
| "SP-8" | WALL "B" | [3] | 26 | 7 | 3 | 546 | 80 | 4 | 7 |

### CHAINLINK FENCE REPAIR CHART

| MARK | LOCATION | REPAIR TYPE | POSTS | TOP RAIL | BOTTOM WIRE | BRACE | FABRIC |
|---|---|---|---|---|---|---|---|
| "CF-1" | WALL "A" | (E) | - | - | - | - | DAMAGED 10'x4' |
| "CF-2" | WALL "B" | (E) | - | - | - | - | DAMAGED 20'x4' |

### CRACK REPAIR CHART

| MARK | LOCATION | REPAIR TYPE | GENERAL CRACKS (LF) | MAJOR CRACKS WIDTH (IN) | MAJOR CRACKS LENGTH (FT) | MAJOR CRACKS START PNT X | MAJOR CRACKS START PNT Y,Z | MAJOR CRACKS END PNT X | MAJOR CRACKS END PNT Y,Z | RATING |
|---|---|---|---|---|---|---|---|---|---|---|
| "MC-1" | WALL "A" | [1] | - | 0.19 | 4 | 54 | 1.5 | 54.5 | 4.5 | 7 |
| "GC-1" | WALL "A" | [*] | 60 | - | - | - | - | - | - | 8 |
| "GC-2" | FLOOR | [*] | 305 | - | - | - | - | - | - | 8 |
| "GC-3" | WALL "B" | [*] | 95 | - | - | - | - | - | - | 8 |

GRAPHIC SCALES:

0 1' 2' 4' 8' 12' 16'

3/16"=1'-0"

| REVISION NO. | DATE | REVISIONS | BY |
|---|---|---|---|

ATHER R. DAR
LICENSED PROFESSIONAL ENGINEER
No. 7808-S
HAWAII U.S.A.
Exp. Date: 4-30-20

THIS WORK WAS PREPARED BY ME OR UNDER MY SUPERVISION AND CONSTRUCTION OF THIS PROJECT WILL BE UNDER MY OBSERVATION

DEPARTMENT OF HAWAIIAN HOMELAND

# NANAKULI FLOOD CONTROL CHANNEL IMPROVEMENTS NANAKULI VALLEY, OAHU HAWAII

CHANNEL SEGMENT [163] REPAIR DETAILS - 2ND HALF

| | |
|---|---|
| DESIGNED BY: | TTP |
| DRAWN BY: | AK, AP, DL |
| CHECKED BY: | AD |
| SUPV: | |
| DATE: | 03/05/2019 |

HAWAII ENGINEERING GROUP, Inc.
Civil & Structural Engineers
1088 BISHOP STREET #2506
HONOLULU, HI 96813
Tel: 808-533-2092

JOB NO.

SHEET C163B

189 OF 225 SHTS

FILE ___ DRAWER ___ ___ FOLDER ___ ___

Plot date: 15-Apr-2020
Full Size Plot

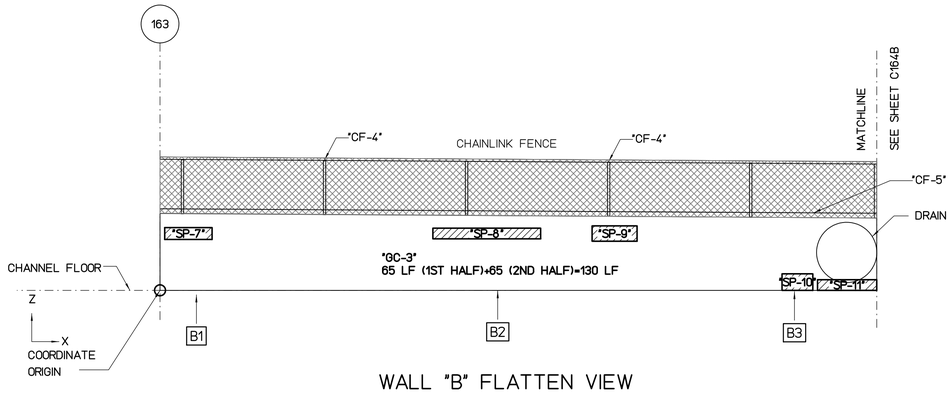


## WALL "B" FLATTEN VIEW

SCALE : 3/16" = 1'-0"

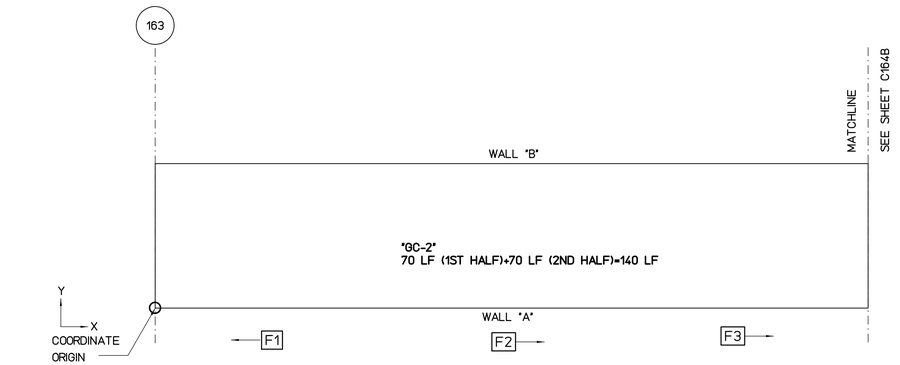


## FLOOR PLAN VIEW

SCALE : 3/16" = 1'-0"

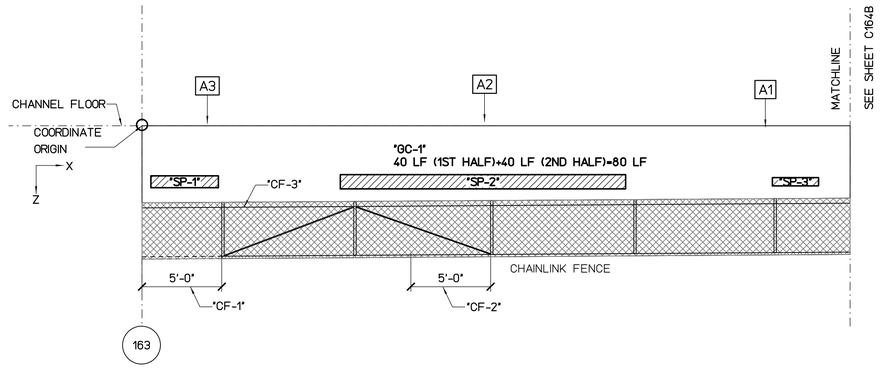


## WALL "A" FLATTEN VIEW

SCALE : 3/16" = 1'-0"

REPAIR LEGEND AND NOTES:

- 2 — CRACK AND SPALL REPAIR TYPES, SEE SHEETS SR201 AND SR202 FOR DETAILS. TYPE [*] INDICATES NO-REPAIR
- (A) — CHAINLINK FENCE REPAIR TYPES, SEE SHEETS SF201 AND SF202 FOR DETAILS
- 1.0 — TOP OF WALL LEANING DISTANCE TOWARD CHANNEL IN INCHES, SEE SHEETS SL101 TO SL207 FOR CONCRETE LINING

PHOTO LEGEND:

- A1 — WALL "A" ELEVATION PHOTO IDENTIFICATION SEE FLATTEN VIEW FOR PHOTO LOCATION
- B1 — WALL "B" ELEVATION PHOTO IDENTIFICATION SEE FLATTEN VIEW FOR PHOTO LOCATION
- F1 — CHANNEL FLOOR PHOTO IDENTIFICATION SEE FLOOR PLAN VIEW FOR PHOTO LOCATION

B1



B2



B3



F1



F2



F3



A1



A2



A3



### SPALL REPAIR CHART

| MARK | LOCATION | REPAIR TYPE | SPALL DIMENSION L | W | D | SPALL VOLUME | SPALL CENTER COORDINATE X | Y OR Z | RATING |
|---|---|---|---|---|---|---|---|---|---|
| "SP-1" | WALL "A" | 3 | 57 | 10 | 3 | 1710 | 3 | 4 | 7 |
| "SP-2" | WALL "A" | 3 | 241 | 12 | 4 | 11568 | 24 | 4 | 7 |
| "SP-3" | WALL "A" | 3 | 39 | 7 | 3 | 819 | 46 | 4 | 7 |
| "SP-4" | WALL "A" | 3 | 213 | 11 | 3 | 7029 | 57 | 4 | 7 |
| "SP-5" | FLOOR | 3 | 114 | 60 | 3 | 20520 | 65 | 7 | 7 |
| "SP-6" | FLOOR | 3 | 240 | 120 | 3 | 86400 | 82 | 5 | 7 |
| "SP-7" | WALL "B" | 3 | 40 | 10 | 3 | 1200 | 2 | 4 | 7 |
| "SP-8" | WALL "B" | 3 | 91 | 9 | 3 | 2457 | 23 | 4 | 7 |
| "SP-9" | WALL "B" | 3 | 38 | 13 | 3 | 1482 | 32 | 4 | 7 |
| "SP-10" | WALL "B" | 3 | 26 | 14 | 4 | 1456 | 44 | 0.5 | 7 |
| "SP-11" | WALL "B" | 3 | 50 | 9 | 3 | 1350 | 47 | 1 | 7 |
| "SP-12" | WALL "B" | 3 | 300 | 12 | 4 | 14400 | 82 | 4 | 7 |
| "SP-13" | WALL "B" | 3 | 10 | 10 | 4 | 400 | 100.5 | 1 | 7 |

### CHAINLINK FENCE REPAIR CHART

| MARK | LOCATION | REPAIR TYPE | POSTS | TOP RAIL | BOTTOM WIRE | BRACE | FABRIC |
|---|---|---|---|---|---|---|---|
| "CF-1" | WALL "A" | (C) | - | MISSING 5' | - | - | - |
| "CF-2" | WALL "A" | (C) | - | DAMAGED 5' | - | - | - |
| "CF-3" | WALL "A" | (D) | - | - | DAMAGED 50' | - | - |
| "CF-4" | WALL "B" | (A) | BENT 2 | - | - | - | - |
| "CF-5" | WALL "B" | (D) | - | - | DAMAGED 50' | - | - |

### CRACK REPAIR CHART

| MARK | LOCATION | REPAIR TYPE | GENERAL CRACKS (LF) | MAJOR CRACKS WIDTH (IN) | LENGTH (FT) | START PNT X | START PNT Y,Z | END PNT X | END PNT Y,Z | RATING |
|---|---|---|---|---|---|---|---|---|---|---|
| "GC-1" | WALL "A" | [*] | 80 | - | - | - | - | - | - | 8 |
| "GC-2" | FLOOR | [*] | 140 | - | - | - | - | - | - | 8 |
| "GC-3" | WALL "B" | [*] | 130 | - | - | - | - | - | - | 8 |

GRAPHIC SCALES:

0 1' 2' 4' 8' 12' 16'

3/16"=1'-0"

| REVISION NO. | DATE | REVISIONS | BY |
|---|---|---|---|

ATHER R. DAR
LICENSED PROFESSIONAL ENGINEER
No. 7808-S
HAWAII U.S.A.

Exp. Date: 4-30-20

THIS WORK WAS PREPARED BY ME OR UNDER MY SUPERVISION AND CONSTRUCTION OF THIS PROJECT WILL BE UNDER MY OBSERVATION

DEPARTMENT OF HAWAIIAN HOMELAND

# NANAKULI FLOOD CONTROL CHANNEL IMPROVEMENTS NANAKULI VALLEY, OAHU HAWAII

CHANNEL SEGMENT 164 REPAIR DETAILS - 1ST HALF

| | |
|---|---|
| DESIGNED BY: | TTP |
| DRAWN BY: | AK, AP, DL |
| CHECKED BY: | AD |
| SUPV: | |
| DATE: | 03/05/2019 |

HAWAII ENGINEERING GROUP, Inc.
Civil & Structural Engineers
1088 BISHOP STREET #2506
HONOLULU, HI 96813
Tel: 808-533-2092

JOB NO.

SHEET C164A

190 OF 225 SHTS

FILE ___ ___ DRAWER ___ ___ ___ FOLDER ___ ___

Plot date: 15-Apr-2020
Full Size Plot

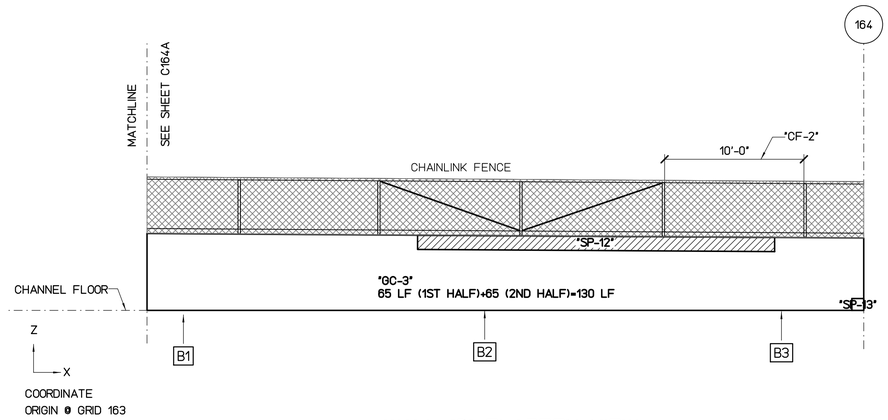


## WALL "B" FLATTEN VIEW

SCALE : 3/16" = 1'-0"

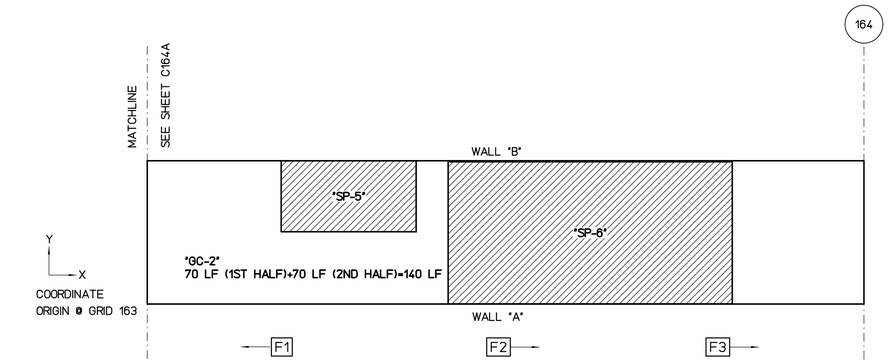


## FLOOR PLAN VIEW

SCALE : 3/16" = 1'-0"

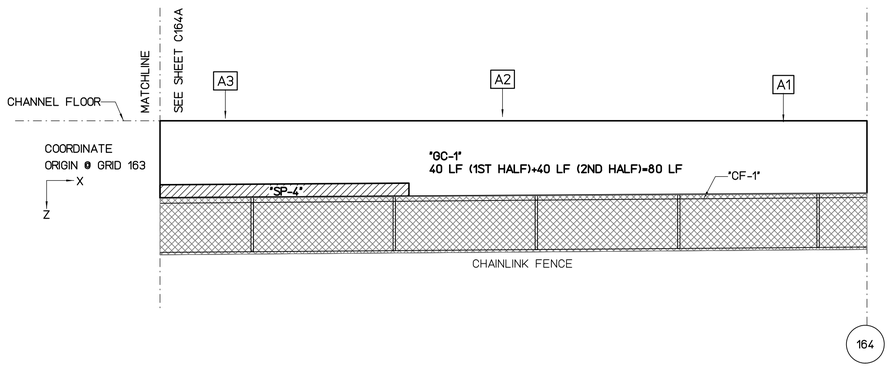


## WALL "A" FLATTEN VIEW

SCALE : 3/16" = 1'-0"

REPAIR LEGEND AND NOTES:

- 2 — CRACK AND SPALL REPAIR TYPES, SEE SHEETS SR201 AND SR202 FOR DETAILS. TYPE [*] INDICATES NO-REPAIR
- (A) — CHAINLINK FENCE REPAIR TYPES, SEE SHEETS SF201 AND SF202 FOR DETAILS
- 1.0 — TOP OF WALL LEANING DISTANCE TOWARD CHANNEL IN INCHES, SEE SHEETS SL101 TO SL207 FOR CONCRETE LINING

PHOTO LEGEND:

- A1 — WALL "A" ELEVATION PHOTO IDENTIFICATION SEE FLATTEN VIEW FOR PHOTO LOCATION
- B1 — WALL "B" ELEVATION PHOTO IDENTIFICATION SEE FLATTEN VIEW FOR PHOTO LOCATION
- F1 — CHANNEL FLOOR PHOTO IDENTIFICATION SEE FLOOR PLAN VIEW FOR PHOTO LOCATION

B1



B2



B3



F1



F2



F3



A1



A2



A3



### SPALL REPAIR CHART

| MARK | LOCATION | REPAIR TYPE | SPALL DIMENSION L | W | D | SPALL VOLUME | SPALL CENTER COORDINATE X | Y OR Z | RATING |
|---|---|---|---|---|---|---|---|---|---|
| "SP-1" | WALL "A" | 3 | 57 | 10 | 3 | 1710 | 3 | 4 | 7 |
| "SP-2" | WALL "A" | 3 | 241 | 12 | 4 | 11568 | 24 | 4 | 7 |
| "SP-3" | WALL "A" | 3 | 39 | 7 | 3 | 819 | 46 | 4 | 7 |
| "SP-4" | WALL "A" | 3 | 213 | 11 | 3 | 7029 | 57 | 4 | 7 |
| "SP-5" | FLOOR | 3 | 114 | 60 | 3 | 20520 | 65 | 7 | 7 |
| "SP-6" | FLOOR | 3 | 240 | 120 | 3 | 86400 | 82 | 5 | 7 |
| "SP-7" | WALL "B" | 3 | 40 | 10 | 3 | 1200 | 2 | 4 | 7 |
| "SP-8" | WALL "B" | 3 | 91 | 9 | 3 | 2457 | 23 | 4 | 7 |
| "SP-9" | WALL "B" | 3 | 38 | 13 | 3 | 1482 | 32 | 4 | 7 |
| "SP-10" | WALL "B" | 3 | 26 | 14 | 4 | 1456 | 44 | 0.5 | 7 |
| "SP-11" | WALL "B" | 3 | 50 | 9 | 3 | 1350 | 47 | 1 | 7 |
| "SP-12" | WALL "B" | 3 | 300 | 12 | 4 | 14400 | 82 | 4 | 7 |
| "SP-13" | WALL "B" | 3 | 10 | 10 | 4 | 400 | 100.5 | 1 | 7 |

### CHAINLINK FENCE REPAIR CHART

| MARK | LOCATION | REPAIR TYPE | POSTS | TOP RAIL | BOTTOM WIRE | BRACE | FABRIC |
|---|---|---|---|---|---|---|---|
| "CF-1" | WALL "A" | (D) | - | - | DAMAGED 50' | - | - |
| "CF-2" | WALL "B" | (C) | - | DAMAGED 10' | - | - | - |

### CRACK REPAIR CHART

| MARK | LOCATION | REPAIR TYPE | GENERAL CRACKS (LF) | MAJOR CRACKS WIDTH (IN) | LENGTH (FT) | START PNT X | START PNT Y,Z | END PNT X | END PNT Y,Z | RATING |
|---|---|---|---|---|---|---|---|---|---|---|
| "GC-1" | WALL "A" | * | 80 | - | - | - | - | - | - | 8 |
| "GC-2" | FLOOR | * | 140 | - | - | - | - | - | - | 8 |
| "GC-3" | WALL "B" | * | 130 | - | - | - | - | - | - | 8 |

GRAPHIC SCALES:

0 1' 2' 4' 8' 12' 16'

3/16"=1'-0"

| REVISION NO. | DATE | REVISIONS | BY |
|---|---|---|---|

ATHER R. DAR
LICENSED PROFESSIONAL ENGINEER
No. 7808-S
HAWAII U.S.A.

Exp. Date: 4-30-20

THIS WORK WAS PREPARED BY ME OR UNDER MY SUPERVISION AND CONSTRUCTION OF THIS PROJECT WILL BE UNDER MY OBSERVATION

DEPARTMENT OF HAWAIIAN HOMELAND

# NANAKULI FLOOD CONTROL CHANNEL IMPROVEMENTS NANAKULI VALLEY, OAHU HAWAII

CHANNEL SEGMENT 164 REPAIR DETAILS - 2ND HALF

| | |
|---|---|
| DESIGNED BY: | TTP |
| DRAWN BY: | AK, AP, DL |
| CHECKED BY: | AD |
| SUPV: | |
| DATE: | 03/05/2019 |

HAWAII ENGINEERING GROUP, Inc.
Civil & Structural Engineers
1088 BISHOP STREET #2506
HONOLULU, HI 96813
Tel: 808-533-2092

JOB NO.

SHEET C164B

191 OF 225 SHTS

FILE ___ DRAWER ___ ___ FOLDER ___ ___

Plot date: 15-Apr-2020
Full Size Plot

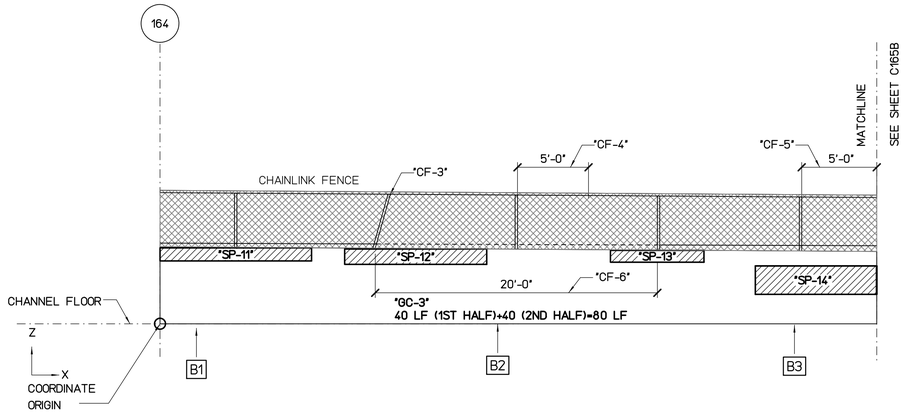


## WALL "B" FLATTEN VIEW

SCALE : 3/16" = 1'-0"

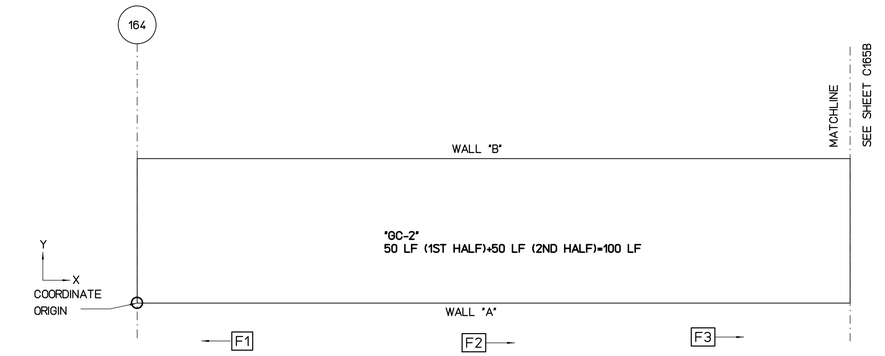


## FLOOR PLAN VIEW

SCALE : 3/16" = 1'-0"

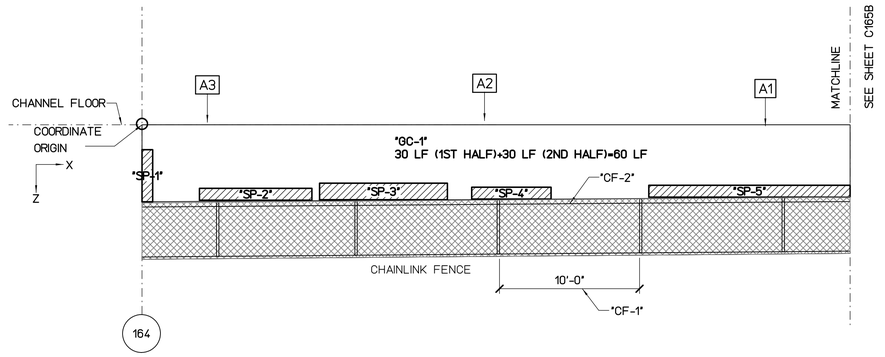


## WALL "A" FLATTEN VIEW

SCALE : 3/16" = 1'-0"

REPAIR LEGEND AND NOTES:

- [2] CRACK AND SPALL REPAIR TYPES, SEE SHEETS SR201 AND SR202 FOR DETAILS. TYPE [*] INDICATES NO-REPAIR
- (A) CHAINLINK FENCE REPAIR TYPES, SEE SHEETS SF201 AND SF202 FOR DETAILS
- 1.0> TOP OF WALL LEANING DISTANCE TOWARD CHANNEL IN INCHES, SEE SHEETS SL101 TO SL207 FOR CONCRETE LINING

PHOTO LEGEND:

- [A1] WALL "A" ELEVATION PHOTO IDENTIFICATION SEE FLATTEN VIEW FOR PHOTO LOCATION
- [B1] WALL "B" ELEVATION PHOTO IDENTIFICATION SEE FLATTEN VIEW FOR PHOTO LOCATION
- [F1] CHANNEL FLOOR PHOTO IDENTIFICATION SEE FLOOR PLAN VIEW FOR PHOTO LOCATION

B1



B2



B3



F1



F2



F3



A1



A2



A3



### SPALL REPAIR CHART

| MARK | LOCATION | REPAIR TYPE | SPALL DIMENSION L | W | D | SPALL VOLUME | SPALL CENTER COORDINATE X | Y OR Z | RATING |
|---|---|---|---|---|---|---|---|---|---|
| "SP-1" | WALL "A" | [3] | 9 | 44 | 4 | 1584 | 0.6 | 3 | 6 |
| "SP-2" | WALL "A" | [3] | 95 | 10 | 2 | 1900 | 8 | 4 | 7 |
| "SP-3" | WALL "A" | [3] | 108 | 14 | 2 | 3024 | 17 | 4 | 7 |
| "SP-4" | WALL "A" | [3] | 67 | 10 | 2 | 1340 | 26 | 4 | 7 |
| "SP-5" | WALL "A" | [3] | 170 | 10 | 2 | 3400 | 44 | 4 | 7 |
| "SP-6" | WALL "A" | [3] | 96 | 8 | 2 | 1536 | 54 | 4 | 7 |
| "SP-7" | WALL "A" | [3] | 30 | 8 | 2 | 480 | 81 | 4 | 7 |
| "SP-8" | WALL "A" | [3] | 31 | 9 | 2 | 558 | 96 | 4 | 7 |
| "SP-9" | FLOOR | [3] | 324 | 120 | 3 | 116640 | 64 | 5 | 7 |
| "SP-10" | FLOOR | [3] | 72 | 72 | 3 | 15552 | 83 | 6 | 7 |
| "SP-11" | WALL "B" | [3] | 128 | 11 | 4 | 5632 | 7 | 4 | 6 |
| "SP-12" | WALL "B" | [3] | 120 | 13 | 3 | 4680 | 18 | 4 | 7 |
| "SP-13" | WALL "B" | [3] | 79 | 10 | 3 | 2370 | 35 | 4 | 7 |
| "SP-14" | WALL "B" | [3] | 708 | 24 | 4 | 67968 | 70 | 3 | 6 |

### CHAINLINK FENCE REPAIR CHART

| MARK | LOCATION | REPAIR TYPE | POSTS | TOP RAIL | BOTTOM WIRE | BRACE | FABRIC |
|---|---|---|---|---|---|---|---|
| "CF-1" | WALL "A" | (C) | - | BENT 10' | - | - | - |
| "CF-2" | WALL "A" | (D) | - | - | DAMAGED 50' | - | - |
| "CF-3" | WALL "B" | (A) | BENT 1 | - | - | - | - |
| "CF-4" | WALL "B" | (E) | - | - | - | - | DAMAGED 5'x4' |
| "CF-5" | WALL "B" | (C) | - | DAMAGED 5' | - | - | - |
| "CF-6" | WALL "B" | (D) | - | - | DAMAGED 20' | - | - |

### CRACK REPAIR CHART

| MARK | LOCATION | REPAIR TYPE | GENERAL CRACKS (LF) | MAJOR CRACKS WIDTH (IN) | LENGTH (FT) | START PNT X | START PNT Y,Z | END PNT X | END PNT Y,Z | RATING |
|---|---|---|---|---|---|---|---|---|---|---|
| "GC-1" | WALL "A" | [*] | 60 | - | - | - | - | - | - | 8 |
| "GC-2" | FLOOR | [*] | 100 | - | - | - | - | - | - | 8 |
| "GC-3" | WALL "B" | [*] | 80 | - | - | - | - | - | - | 8 |

GRAPHIC SCALES:

0 1' 2' 4' 8' 12' 16'

3/16"=1'-0"

| REVISION NO. | DATE | REVISIONS | BY |
|---|---|---|---|

ATHER R. DAR
LICENSED PROFESSIONAL ENGINEER
No. 7808-S
HAWAII U.S.A.

Exp. Date: 4-30-20

THIS WORK WAS PREPARED BY ME OR UNDER MY SUPERVISION AND CONSTRUCTION OF THIS PROJECT WILL BE UNDER MY OBSERVATION

DEPARTMENT OF HAWAIIAN HOMELAND

# NANAKULI FLOOD CONTROL CHANNEL IMPROVEMENTS NANAKULI VALLEY, OAHU HAWAII

CHANNEL SEGMENT [165] REPAIR DETAILS - 1ST HALF

| | |
|---|---|
| DESIGNED BY: | TTP |
| DRAWN BY: | AK, AP, DL |
| CHECKED BY: | AD |
| SUPV: | |
| DATE: | 03/05/2019 |

HAWAII ENGINEERING GROUP, Inc.
Civil & Structural Engineers
1088 BISHOP STREET #2506
HONOLULU, HI 96813
Tel: 808-533-2092

JOB NO.

SHEET C165A

192 OF 225 SHTS

FILE ___ ___ DRAWER ___ ___ ___ FOLDER ___ ___

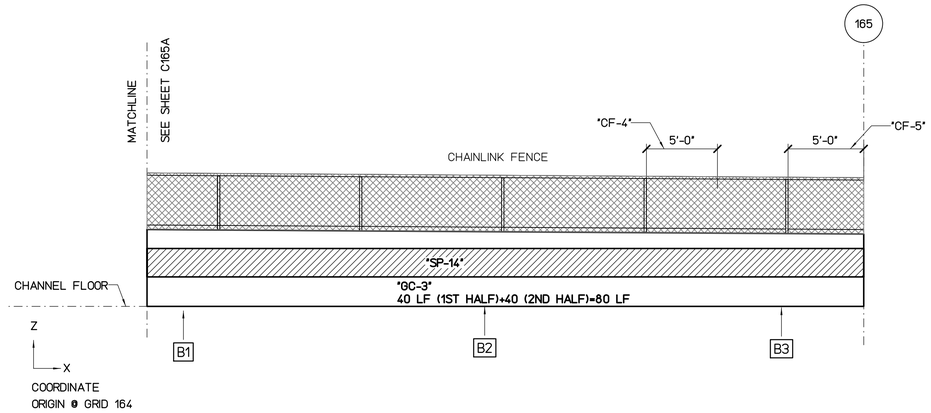


## WALL "B" FLATTEN VIEW

SCALE : 3/16" = 1'-0"

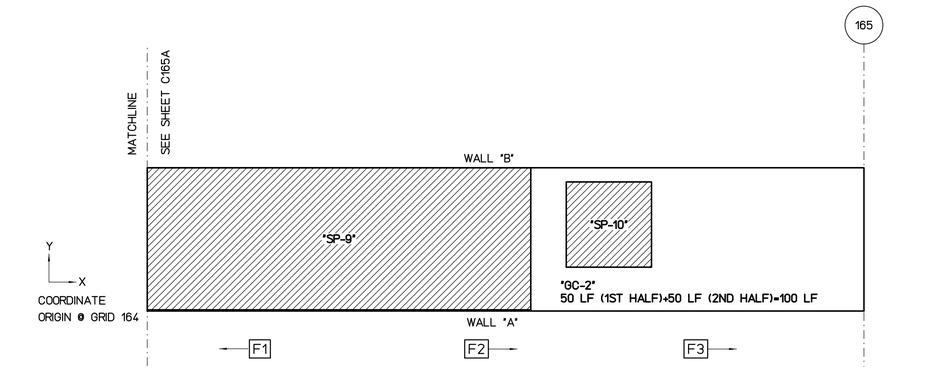


## FLOOR PLAN VIEW

SCALE : 3/16" = 1'-0"

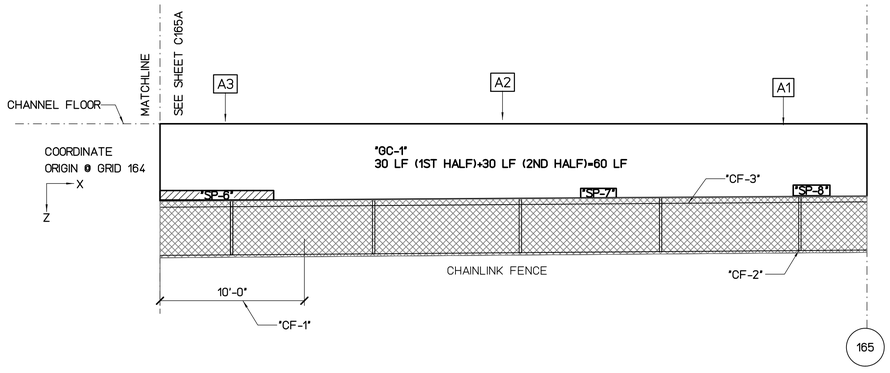


## WALL "A" FLATTEN VIEW

SCALE : 3/16" = 1'-0"

REPAIR LEGEND AND NOTES:

- 2 — CRACK AND SPALL REPAIR TYPES, SEE SHEETS SR201 AND SR202 FOR DETAILS. TYPE [*] INDICATES NO-REPAIR
- (A) — CHAINLINK FENCE REPAIR TYPES, SEE SHEETS SF201 AND SF202 FOR DETAILS
- 1.0 — TOP OF WALL LEANING DISTANCE TOWARD CHANNEL IN INCHES, SEE SHEETS SL101 TO SL207 FOR CONCRETE LINING

PHOTO LEGEND:

- A1 — WALL "A" ELEVATION PHOTO IDENTIFICATION SEE FLATTEN VIEW FOR PHOTO LOCATION
- B1 — WALL "B" ELEVATION PHOTO IDENTIFICATION SEE FLATTEN VIEW FOR PHOTO LOCATION
- F1 — CHANNEL FLOOR PHOTO IDENTIFICATION SEE FLOOR PLAN VIEW FOR PHOTO LOCATION

B1



B2



B3



F1



F2



F3



A1



A2



A3



### SPALL REPAIR CHART

| MARK | LOCATION | REPAIR TYPE | SPALL DIMENSION L | SPALL DIMENSION W | SPALL DIMENSION D | SPALL VOLUME | SPALL CENTER COORDINATE X | SPALL CENTER COORDINATE Y OR Z | RATING |
|---|---|---|---|---|---|---|---|---|---|
| "SP-1" | WALL "A" | 3 | 9 | 44 | 4 | 1584 | 0.6 | 3 | 6 |
| "SP-2" | WALL "A" | 3 | 95 | 10 | 2 | 1900 | 8 | 4 | 7 |
| "SP-3" | WALL "A" | 3 | 108 | 14 | 2 | 3024 | 17 | 4 | 7 |
| "SP-4" | WALL "A" | 3 | 67 | 10 | 2 | 1340 | 26 | 4 | 7 |
| "SP-5" | WALL "A" | 3 | 10 | 170 | 2 | 3400 | 44 | 4 | 7 |
| "SP-6" | WALL "A" | 3 | 96 | 8 | 2 | 1536 | 54 | 4 | 7 |
| "SP-7" | WALL "A" | 3 | 30 | 8 | 2 | 480 | 81 | 4 | 7 |
| "SP-8" | WALL "A" | 3 | 31 | 9 | 2 | 558 | 96 | 4 | 7 |
| "SP-9" | FLOOR | 3 | 324 | 120 | 3 | 116640 | 64 | 5 | 7 |
| "SP-10" | FLOOR | 3 | 72 | 72 | 3 | 15552 | 83 | 6 | 7 |
| "SP-11" | WALL "B" | 3 | 128 | 11 | 4 | 5632 | 7 | 4 | 6 |
| "SP-12" | WALL "B" | 3 | 120 | 13 | 3 | 4680 | 18 | 4 | 7 |
| "SP-13" | WALL "B" | 3 | 79 | 10 | 3 | 2370 | 35 | 4 | 7 |
| "SP-14" | WALL "B" | 3 | 708 | 24 | 4 | 67968 | 70 | 3 | 6 |

### CRACK REPAIR CHART

| MARK | LOCATION | REPAIR TYPE | GENERAL CRACKS (LF) | MAJOR CRACKS WIDTH (IN) | MAJOR CRACKS LENGTH (FT) | MAJOR CRACKS START PNT X | MAJOR CRACKS START PNT Y,Z | MAJOR CRACKS END PNT X | MAJOR CRACKS END PNT Y,Z | RATING |
|---|---|---|---|---|---|---|---|---|---|---|
| "GC-1" | WALL "A" | * | 60 | - | - | - | - | - | - | 8 |
| "GC-2" | FLOOR | * | 100 | - | - | - | - | - | - | 8 |
| "GC-3" | WALL "B" | * | 80 | - | - | - | - | - | - | 8 |

### CHAINLINK FENCE REPAIR CHART

| MARK | LOCATION | REPAIR TYPE | POSTS | TOP RAIL | BOTTOM WIRE | BRACE | FABRIC |
|---|---|---|---|---|---|---|---|
| "CF-1" | WALL "A" | (E) | - | - | - | - | DAMAGED 10'x4' |
| "CF-2" | WALL "A" | (A) | BENT 1 | - | - | - | - |
| "CF-3" | WALL "A" | (D) | - | - | DAMAGED 50' | - | - |
| "CF-4" | WALL "B" | (E) | - | - | - | - | DAMAGED 5'x4' |
| "CF-5" | WALL "B" | (D) | - | - | DAMAGED 5' | - | - |

GRAPHIC SCALES:

0 1' 2' 4' 8' 12' 16'

3/16"=1'-0"

| REVISION NO. | DATE | REVISIONS | BY |
|---|---|---|---|

ARTHER R. DAR
LICENSED PROFESSIONAL ENGINEER
No. 7808-S
HAWAII U.S.A.

Exp. Date: 4-30-20

THIS WORK WAS PREPARED BY ME OR UNDER MY SUPERVISION AND CONSTRUCTION OF THIS PROJECT WILL BE UNDER MY OBSERVATION

DEPARTMENT OF HAWAIIAN HOMELAND

# NANAKULI FLOOD CONTROL CHANNEL IMPROVEMENTS NANAKULI VALLEY, OAHU HAWAII

CHANNEL SEGMENT 165 REPAIR DETAILS - 2ND HALF

| | |
|---|---|
| DESIGNED BY: | TTP |
| DRAWN BY: | AK, AP, DL |
| CHECKED BY: | AD |
| SUPV: | |
| DATE: | 03/05/2019 |


HAWAII ENGINEERING GROUP, Inc.
Civil & Structural Engineers
1088 BISHOP STREET #2506
HONOLULU, HI 96813
Tel: 808-533-2092


JOB NO.

SHEET C165B

193 OF 225 SHTS

FILE ___ ___ DRAWER ___ ___ ___ FOLDER ___ ___

Plot date: 15-Apr-2020

Full Size Plot

Plot date: 15-Apr-2020
Full Size Plot

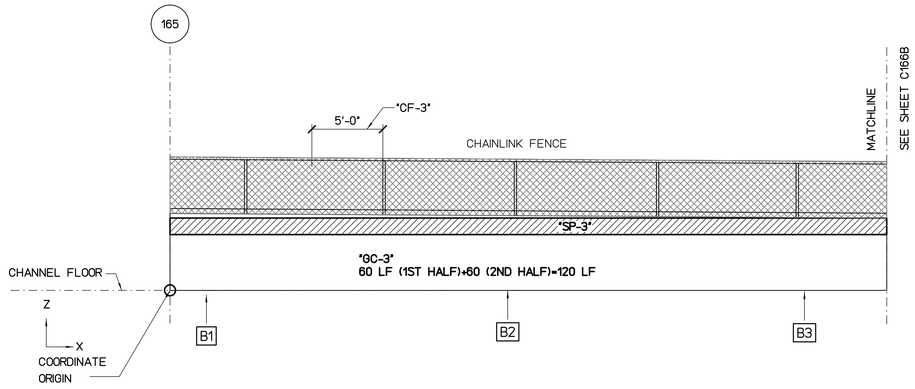


## WALL "B" FLATTEN VIEW

SCALE : 3/16" = 1'-0"

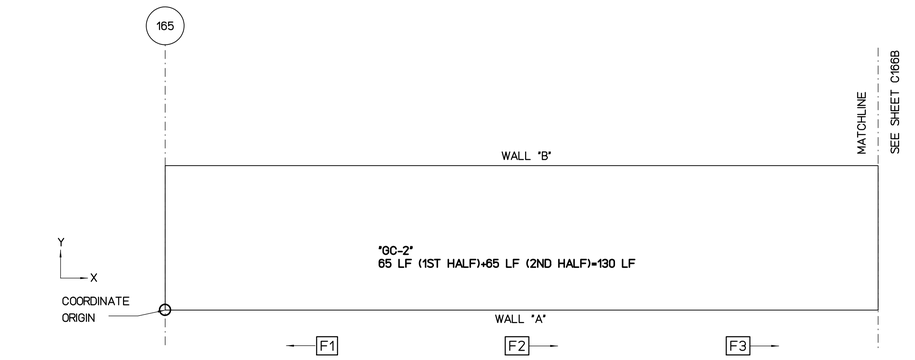


## FLOOR PLAN VIEW

SCALE : 3/16" = 1'-0"

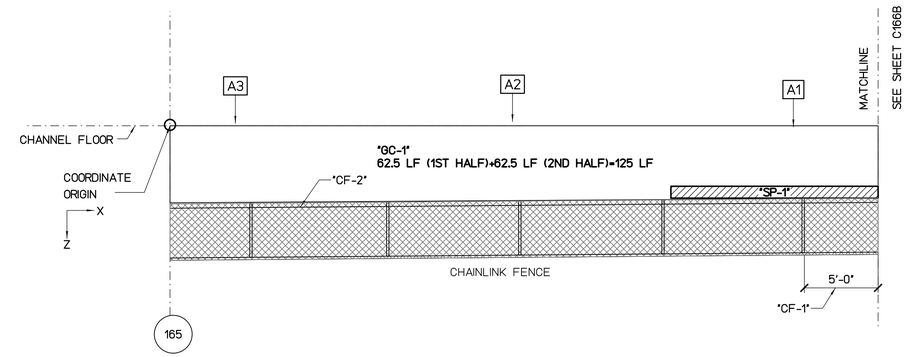


## WALL "A" FLATTEN VIEW

SCALE : 3/16" = 1'-0"

REPAIR LEGEND AND NOTES:

- 2 — CRACK AND SPALL REPAIR TYPES, SEE SHEETS SR201 AND SR202 FOR DETAILS. TYPE ✱ INDICATES NO-REPAIR
- Ⓐ — CHAINLINK FENCE REPAIR TYPES, SEE SHEETS SF201 AND SF202 FOR DETAILS
- 1.0 — TOP OF WALL LEANING DISTANCE TOWARD CHANNEL IN INCHES, SEE SHEETS SL101 TO SL207 FOR CONCRETE LINING

PHOTO LEGEND:

- A1 — WALL "A" ELEVATION PHOTO IDENTIFICATION SEE FLATTEN VIEW FOR PHOTO LOCATION
- B1 — WALL "B" ELEVATION PHOTO IDENTIFICATION SEE FLATTEN VIEW FOR PHOTO LOCATION
- F1 — CHANNEL FLOOR PHOTO IDENTIFICATION SEE FLOOR PLAN VIEW FOR PHOTO LOCATION

B1



B2



B3



F1



F2



F3



A1



A2



A3



### SPALL REPAIR CHART

| MARK | LOCATION | REPAIR TYPE | SPALL DIMENSION L | SPALL DIMENSION W | SPALL DIMENSION D | SPALL VOLUME | SPALL CENTER COORDINATE X | SPALL CENTER COORDINATE Y OR Z | RATING |
|---|---|---|---|---|---|---|---|---|---|
| "SP-1" | WALL "A" | 3 | 175 | 10 | 3 | 5250 | 44 | 4 | 7 |
| "SP-2" | FLOOR | 3 | 384 | 120 | 3 | 138240 | 72 | 5 | 7 |
| "SP-3" | WALL "B" | 3 | 684 | 14 | 4 | 38304 | 30 | 4 | 6 |
| "SP-4" | WALL "B" | 3 | 168 | 8 | 3 | 4032 | 79 | 4 | 7 |
| "SP-5" | WALL "B" | 3 | 20 | 12 | 3 | 720 | 95 | 4 | 7 |

### CHAINLINK FENCE REPAIR CHART

| MARK | LOCATION | REPAIR TYPE | POSTS | TOP RAIL | BOTTOM WIRE | BRACE | FABRIC |
|---|---|---|---|---|---|---|---|
| "CF-1" | WALL "A" | Ⓔ | - | - | - | - | DAMAGED 5'x4' |
| "CF-2" | WALL "A" | Ⓓ | - | - | DAMAGED 50' | - | - |
| "CF-3" | WALL "B" | Ⓔ | - | - | - | - | DAMAGED 5'x4' |

### CRACK REPAIR CHART

| MARK | LOCATION | REPAIR TYPE | GENERAL CRACKS (LF) | MAJOR CRACKS WIDTH (IN) | MAJOR CRACKS LENGTH (FT) | MAJOR CRACKS START PNT X | MAJOR CRACKS START PNT Y,Z | MAJOR CRACKS END PNT X | MAJOR CRACKS END PNT Y,Z | RATING |
|---|---|---|---|---|---|---|---|---|---|---|
| "MC-1" | WALL "A" | 1 | - | 0.19 | 4 | 85 | 0.5 | 85 | 4.5 | 7 |
| "GC-1" | WALL "A" | ✱ | 125 | - | - | - | - | - | - | 8 |
| "GC-2" | FLOOR | ✱ | 130 | - | - | - | - | - | - | 8 |
| "GC-3" | WALL "B" | ✱ | 120 | - | - | - | - | - | - | 8 |

GRAPHIC SCALES:

0 1' 2' 4' 8' 12' 16'

3/16"=1'-0"

| REVISION NO. | DATE | REVISIONS | BY |
|---|---|---|---|

ATHER R. DAR
LICENSED PROFESSIONAL ENGINEER
No. 7808-S
HAWAII U.S.A.

Exp. Date: 4-30-20

THIS WORK WAS PREPARED BY ME OR UNDER MY SUPERVISION AND CONSTRUCTION OF THIS PROJECT WILL BE UNDER MY OBSERVATION

DEPARTMENT OF HAWAIIAN HOMELAND

# NANAKULI FLOOD CONTROL CHANNEL IMPROVEMENTS NANAKULI VALLEY, OAHU HAWAII

CHANNEL SEGMENT 166 REPAIR DETAILS - 1ST HALF

| | |
|---|---|
| DESIGNED BY: | TTP |
| DRAWN BY: | AK, AP, DL |
| CHECKED BY: | AD |
| SUPV: | |
| DATE: | 03/05/2019 |

HAWAII ENGINEERING GROUP, Inc.
Civil & Structural Engineers
1088 BISHOP STREET #2506
HONOLULU, HI 96813
Tel: 808-533-2092

JOB NO.

SHEET C166A

194 OF 225 SHTS

FILE ___ DRAWER ___ ___ FOLDER ___ ___

Plot date: 15-Apr-2020
Full Size Plot

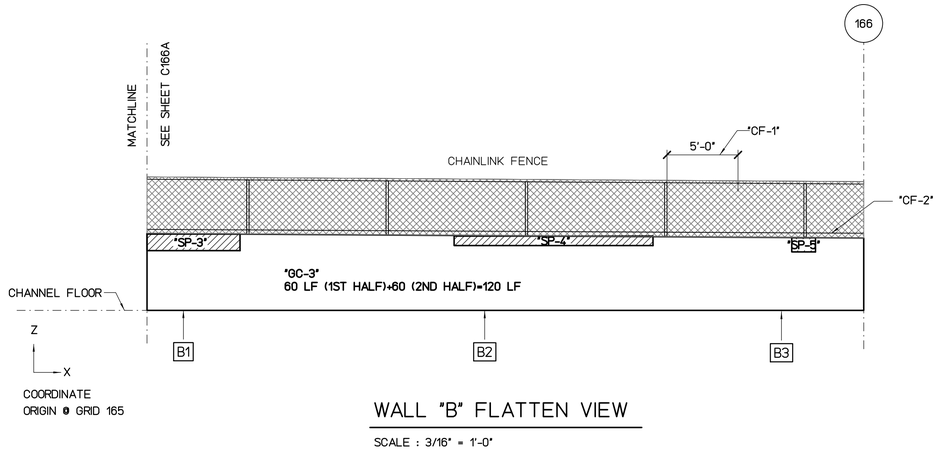


## WALL "B" FLATTEN VIEW

SCALE : 3/16" = 1'-0"

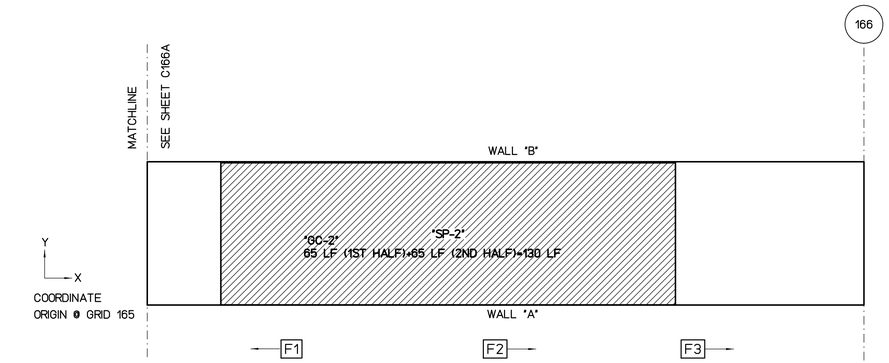


## FLOOR PLAN VIEW

SCALE : 3/16" = 1'-0"

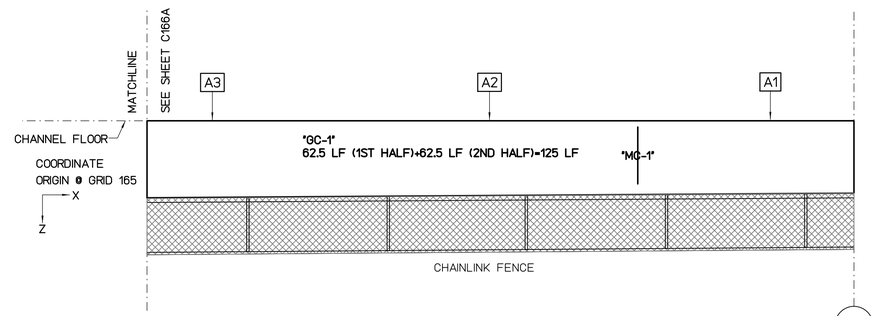


## WALL "A" FLATTEN VIEW

SCALE : 3/16" = 1'-0"

REPAIR LEGEND AND NOTES:

- [2] CRACK AND SPALL REPAIR TYPES, SEE SHEETS SR201 AND SR202 FOR DETAILS. TYPE [*] INDICATES NO-REPAIR
- (A) CHAINLINK FENCE REPAIR TYPES, SEE SHEETS SF201 AND SF202 FOR DETAILS
- 1.0> TOP OF WALL LEANING DISTANCE TOWARD CHANNEL IN INCHES, SEE SHEETS SL101 TO SL207 FOR CONCRETE LINING

PHOTO LEGEND:

- A1 WALL "A" ELEVATION PHOTO IDENTIFICATION SEE FLATTEN VIEW FOR PHOTO LOCATION
- B1 WALL "B" ELEVATION PHOTO IDENTIFICATION SEE FLATTEN VIEW FOR PHOTO LOCATION
- F1 CHANNEL FLOOR PHOTO IDENTIFICATION SEE FLOOR PLAN VIEW FOR PHOTO LOCATION

B1



B2



B3



F1



F2



F3



A1



A2



A3



### SPALL REPAIR CHART

| MARK | LOCATION | REPAIR TYPE | SPALL DIMENSION L | W | D | SPALL VOLUME | SPALL CENTER COORDINATE X | Y OR Z | RATING |
|---|---|---|---|---|---|---|---|---|---|
| "SP-1" | WALL "A" | [3] | 175 | 10 | 3 | 5250 | 44 | 4 | 7 |
| "SP-2" | FLOOR | [3] | 384 | 120 | 3 | 138240 | 72 | 5 | 7 |
| "SP-3" | WALL "B" | [3] | 684 | 14 | 4 | 38304 | 30 | 4 | 6 |
| "SP-4" | WALL "B" | [3] | 168 | 8 | 3 | 4032 | 79 | 4 | 7 |
| "SP-5" | WALL "B" | [3] | 20 | 12 | 3 | 720 | 95 | 4 | 7 |

### CHAINLINK FENCE REPAIR CHART

| MARK | LOCATION | REPAIR TYPE | POSTS | TOP RAIL | BOTTOM WIRE | BRACE | FABRIC |
|---|---|---|---|---|---|---|---|
| "CF-1" | WALL "B" | (E) | - | - | - | - | MISSING 5'x4' |
| "CF-2" | WALL "B" | (D) | - | - | DAMAGED 50' | - | - |

### CRACK REPAIR CHART

| MARK | LOCATION | REPAIR TYPE | GENERAL CRACKS (LF) | MAJOR CRACKS WIDTH (IN) | LENGTH (FT) | START PNT X | START PNT Y,Z | END PNT X | END PNT Y,Z | RATING |
|---|---|---|---|---|---|---|---|---|---|---|
| "MC-1" | WALL "A" | [1] | - | 0.19 | 4 | 85 | 0.5 | 85 | 4.5 | 7 |
| "GC-1" | WALL "A" | [*] | 125 | - | - | - | - | - | - | 8 |
| "GC-2" | FLOOR | [*] | 130 | - | - | - | - | - | - | 8 |
| "GC-3" | WALL "B" | [*] | 120 | - | - | - | - | - | - | 8 |

GRAPHIC SCALES:

0 1' 2' 4' 8' 12' 16'

3/16"=1'-0"

| REVISION NO. | DATE | REVISIONS | BY |
|---|---|---|---|

ATHER R. DAR
LICENSED PROFESSIONAL ENGINEER
No. 7808-S
HAWAII U.S.A.
Exp. Date: 4-30-20

THIS WORK WAS PREPARED BY ME OR UNDER MY SUPERVISION AND CONSTRUCTION OF THIS PROJECT WILL BE UNDER MY OBSERVATION

DEPARTMENT OF HAWAIIAN HOMELAND

# NANAKULI FLOOD CONTROL CHANNEL IMPROVEMENTS NANAKULI VALLEY, OAHU HAWAII

CHANNEL SEGMENT [166] REPAIR DETAILS - 2ND HALF

| | |
|---|---|
| DESIGNED BY: | TTP |
| DRAWN BY: | AK, AP, DL |
| CHECKED BY: | AD |
| SUPV: | |
| DATE: | 03/05/2019 |

HAWAII ENGINEERING GROUP, Inc.
Civil & Structural Engineers
1088 BISHOP STREET #2506
HONOLULU, HI 96813
Tel: 808-533-2092

JOB NO.

SHEET C166B

195 OF 225 SHTS

FILE ___ DRAWER ___ ___ FOLDER ___ ___

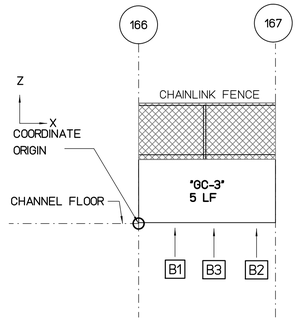


## WALL "B" FLATTEN VIEW

SCALE : 3/16" = 1'-0"

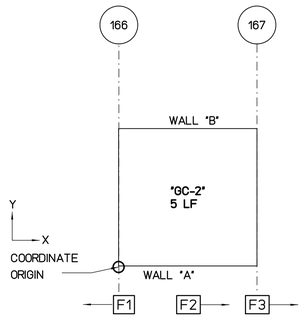


## FLOOR PLAN VIEW

SCALE : 3/16" = 1'-0"

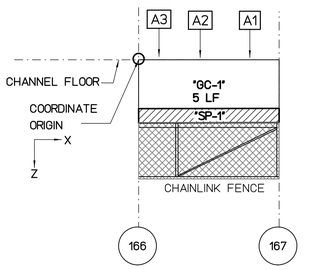


## WALL "A" FLATTEN VIEW

SCALE : 3/16" = 1'-0"

REPAIR LEGEND AND NOTES:

- 2 — CRACK AND SPALL REPAIR TYPES, SEE SHEETS SR201 AND SR202 FOR DETAILS. TYPE [*] INDICATES NO-REPAIR
- (A) — CHAINLINK FENCE REPAIR TYPES, SEE SHEETS SF201 AND SF202 FOR DETAILS
- 1.0 — TOP OF WALL LEANING DISTANCE TOWARD CHANNEL IN INCHES, SEE SHEETS SL101 TO SL207 FOR CONCRETE LINING

PHOTO LEGEND:

- A1 — WALL "A" ELEVATION PHOTO IDENTIFICATION SEE FLATTEN VIEW FOR PHOTO LOCATION
- B1 — WALL "B" ELEVATION PHOTO IDENTIFICATION SEE FLATTEN VIEW FOR PHOTO LOCATION
- F1 — CHANNEL FLOOR PHOTO IDENTIFICATION SEE FLOOR PLAN VIEW FOR PHOTO LOCATION

B1



B2



B3



F1




F2




F3




A1



A2



A3



### SPALL REPAIR CHART

| MARK | LOCATION | REPAIR TYPE | SPALL DIMENSION L | SPALL DIMENSION W | SPALL DIMENSION D | SPALL VOLUME | SPALL CENTER COORDINATE X | SPALL CENTER COORDINATE Y OR Z | RATING |
|---|---|---|---|---|---|---|---|---|---|
| "SP-1" | WALL "A" | 3 | 120 | 12 | 4 | 5760 | 5 | 4 | 7 |

### CHAINLINK FENCE REPAIR CHART

| MARK | LOCATION | REPAIR TYPE | POSTS | TOP RAIL | BOTTOM WIRE | BRACE | FABRIC |
|---|---|---|---|---|---|---|---|

### CRACK REPAIR CHART

| MARK | LOCATION | REPAIR TYPE | GENERAL CRACKS (LF) | MAJOR CRACKS WIDTH (IN) | MAJOR CRACKS LENGTH (FT) | MAJOR CRACKS START PNT X | MAJOR CRACKS START PNT Y,Z | MAJOR CRACKS END PNT X | MAJOR CRACKS END PNT Y,Z | RATING |
|---|---|---|---|---|---|---|---|---|---|---|
| "GC-1" | WALL "A" | * | 5 | - | - | - | - | - | - | 9 |
| "GC-2" | FLOOR | * | 5 | - | - | - | - | - | - | 9 |
| "GC-3" | WALL "B" | * | 5 | - | - | - | - | - | - | 9 |

GRAPHIC SCALES:

0 1' 2' 4' 8' 12' 16'

3/16"=1'-0"

| REVISION NO. | DATE | REVISIONS | BY |
|---|---|---|---|

ATHER R. DAR
LICENSED PROFESSIONAL ENGINEER
No. 7808-S
HAWAII U.S.A.

Exp. Date: 4-30-20

THIS WORK WAS PREPARED BY ME OR UNDER MY SUPERVISION AND CONSTRUCTION OF THIS PROJECT WILL BE UNDER MY OBSERVATION

DEPARTMENT OF HAWAIIAN HOMELAND

# NANAKULI FLOOD CONTROL CHANNEL IMPROVEMENTS NANAKULI VALLEY, OAHU HAWAII

## CHANNEL SEGMENT 167 REPAIR DETAILS

| | |
|---|---|
| DESIGNED BY: | TTP |
| DRAWN BY: | AK, AP, DL |
| CHECKED BY: | AD |
| SUPV: | |
| DATE: | 03/05/2019 |

HAWAII ENGINEERING GROUP, Inc.
Civil & Structural Engineers
1088 BISHOP STREET #2506
HONOLULU, HI 96813
Tel: 808-533-2092

JOB NO.

SHEET C167

196 OF 225 SHTS

FILE ___ DRAWER ___ ___ FOLDER ___ ___

Plot date: 15-Apr-2020

Full Size Plot

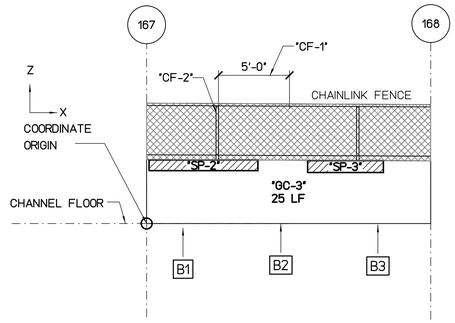


## WALL "B" FLATTEN VIEW

SCALE : 3/16" = 1'-0"

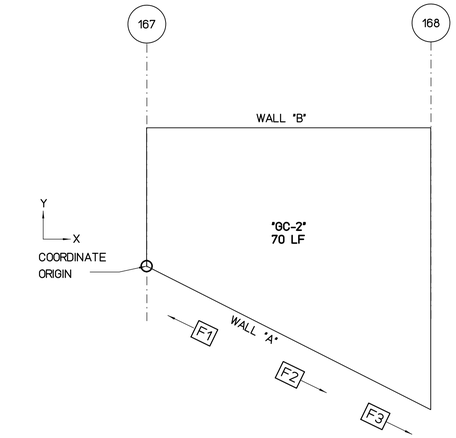


## FLOOR PLAN VIEW

SCALE : 3/16" = 1'-0"

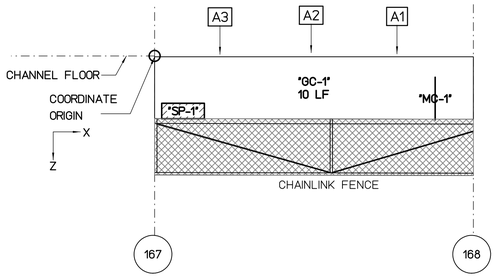


## WALL "A" FLATTEN VIEW

SCALE : 3/16" = 1'-0"

REPAIR LEGEND AND NOTES:

- [2] CRACK AND SPALL REPAIR TYPES, SEE SHEETS SR201 AND SR202 FOR DETAILS. TYPE [*] INDICATES NO-REPAIR
- (A) CHAINLINK FENCE REPAIR TYPES, SEE SHEETS SF201 AND SF202 FOR DETAILS
- [1.0] TOP OF WALL LEANING DISTANCE TOWARD CHANNEL IN INCHES, SEE SHEETS SL101 TO SL207 FOR CONCRETE LINING

PHOTO LEGEND:

- [A1] WALL "A" ELEVATION PHOTO IDENTIFICATION SEE FLATTEN VIEW FOR PHOTO LOCATION
- [B1] WALL "B" ELEVATION PHOTO IDENTIFICATION SEE FLATTEN VIEW FOR PHOTO LOCATION
- [F1] CHANNEL FLOOR PHOTO IDENTIFICATION SEE FLOOR PLAN VIEW FOR PHOTO LOCATION

B1



B2



B3



F1



F2



F3



A1



A2



A3



### SPALL REPAIR CHART

| MARK | LOCATION | REPAIR TYPE | SPALL DIMENSION L | SPALL DIMENSION W | SPALL DIMENSION D | SPALL VOLUME | SPALL CENTER COORDINATE X | SPALL CENTER COORDINATE Y OR Z | RATING |
|---|---|---|---|---|---|---|---|---|---|
| "SP-1" | WALL "A" | [3] | 36 | 13 | 2 | 936 | 2 | 3.9 | 7 |
| "SP-2" | WALL "B" | [3] | 92 | 9 | 3 | 2484 | 4 | 4.1 | 7 |
| "SP-3" | WALL "B" | [3] | 64 | 10 | 3 | 1920 | 14 | 4 | 7 |

### CHAINLINK FENCE REPAIR CHART

| MARK | LOCATION | REPAIR TYPE | POSTS | TOP RAIL | BOTTOM WIRE | BRACE | FABRIC |
|---|---|---|---|---|---|---|---|
| "CF-1" | WALL "B" | (C) | - | DAMAGED 5' | - | - | - |
| "CF-2" | WALL "B" | (A) | BENT 1 | - | - | - | - |

### CRACK REPAIR CHART

| MARK | LOCATION | REPAIR TYPE | GENERAL CRACKS (LF) | MAJOR CRACKS WIDTH (IN) | MAJOR CRACKS LENGTH (FT) | MAJOR CRACKS START PNT X | MAJOR CRACKS START PNT Y,Z | MAJOR CRACKS END PNT X | MAJOR CRACKS END PNT Y,Z | RATING |
|---|---|---|---|---|---|---|---|---|---|---|
| "MC-1" | WALL "A" | [1] | - | 0.25 | 4 | 19.75 | 1.5 | 19.75 | 4.5 | 6 |
| "GC-1" | WALL "A" | [*] | 10 | - | - | - | - | - | - | 8 |
| "GC-2" | FLOOR | [*] | 70 | - | - | - | - | - | - | 8 |
| "GC-3" | WALL "B" | [*] | 25 | - | - | - | - | - | - | 8 |

GRAPHIC SCALES:

0 1' 2' 4' 8' 12' 16'

3/16"=1'-0"

| REVISION NO. | DATE | REVISIONS | BY |
|---|---|---|---|
| | | | |

ATHER R. DAR
LICENSED PROFESSIONAL ENGINEER
No. 7808-S
HAWAII U.S.A.

Exp. Date: 4-30-20

THIS WORK WAS PREPARED BY ME OR UNDER MY SUPERVISION AND CONSTRUCTION OF THIS PROJECT WILL BE UNDER MY OBSERVATION

DEPARTMENT OF HAWAIIAN HOMELAND

# NANAKULI FLOOD CONTROL CHANNEL IMPROVEMENTS NANAKULI VALLEY, OAHU HAWAII

## CHANNEL SEGMENT [168] REPAIR DETAILS

| | |
|---|---|
| DESIGNED BY: | TTP |
| DRAWN BY: | AK, AP, DL |
| CHECKED BY: | AD |
| SUPV: | |
| DATE: | 03/05/2019 |


HAWAII ENGINEERING GROUP, Inc.
Civil & Structural Engineers
1088 BISHOP STREET #2506
HONOLULU, HI 96813
Tel: 808-533-2092


JOB NO.

SHEET C168

197 OF 225 SHTS

FILE ___ DRAWER ___ ___ FOLDER ___ ___

Plot date: 15-Apr-2020

Full Size Plot

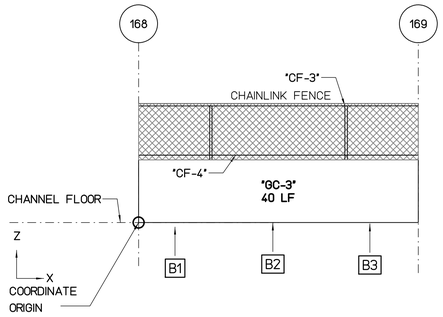


## WALL "B" FLATTEN VIEW

SCALE : 3/16" = 1'-0"

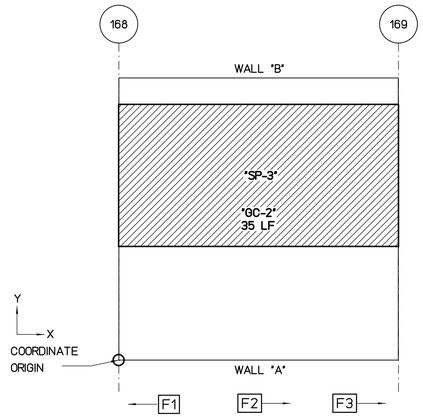


## FLOOR PLAN VIEW

SCALE : 3/16" = 1'-0"

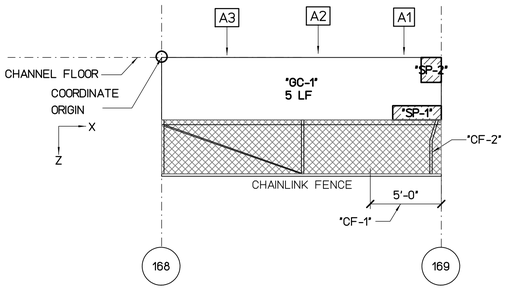


## WALL "A" FLATTEN VIEW

SCALE : 3/16" = 1'-0"

REPAIR LEGEND AND NOTES:

- [2] CRACK AND SPALL REPAIR TYPES, SEE SHEETS SR201 AND SR202 FOR DETAILS. TYPE [*] INDICATES NO-REPAIR
- (A) CHAINLINK FENCE REPAIR TYPES, SEE SHEETS SF201 AND SF202 FOR DETAILS
- [1.0] TOP OF WALL LEANING DISTANCE TOWARD CHANNEL IN INCHES, SEE SHEETS SL101 TO SL207 FOR CONCRETE LINING

PHOTO LEGEND:

- [A1] WALL "A" ELEVATION PHOTO IDENTIFICATION SEE FLATTEN VIEW FOR PHOTO LOCATION
- [B1] WALL "B" ELEVATION PHOTO IDENTIFICATION SEE FLATTEN VIEW FOR PHOTO LOCATION
- [F1] CHANNEL FLOOR PHOTO IDENTIFICATION SEE FLOOR PLAN VIEW FOR PHOTO LOCATION

B1



B2



B3



F1



F2



F3



A1



A2



A3



### SPALL REPAIR CHART

| MARK | LOCATION | REPAIR TYPE | SPALL DIMENSION L | SPALL DIMENSION W | SPALL DIMENSION D | SPALL VOLUME | SPALL CENTER COORDINATE X | SPALL CENTER COORDINATE Y OR Z | RATING |
|---|---|---|---|---|---|---|---|---|---|
| "SP-1" | WALL "A" | [3] | 41 | 12 | 4 | 1968 | 18 | 4 | 7 |
| "SP-2" | WALL "A" | [3] | 17 | 21 | 3 | 1071 | 19 | 1 | 7 |
| "SP-3" | FLOOR | [3] | 236 | 120 | 3 | 86400 | 10 | 13 | 7 |

### CHAINLINK FENCE REPAIR CHART

| MARK | LOCATION | REPAIR TYPE | POSTS | TOP RAIL | BOTTOM WIRE | BRACE | FABRIC |
|---|---|---|---|---|---|---|---|
| "CF-1" | WALL "A" | (E) | - | - | - | - | DAMAGED 5'x4' |
| "CF-2" | WALL "A" | (A) | BENT 1 | - | - | - | - |
| "CF-3" | WALL "B" | (A) | BENT 1 | - | - | - | - |
| "CF-4" | WALL "B" | (D) | - | - | DAMAGED 20' | - | - |

### CRACK REPAIR CHART

| MARK | LOCATION | REPAIR TYPE | GENERAL CRACKS (LF) | MAJOR CRACKS WIDTH (IN) | MAJOR CRACKS LENGTH (FT) | MAJOR CRACKS START PNT X | MAJOR CRACKS START PNT Y,Z | MAJOR CRACKS END PNT X | MAJOR CRACKS END PNT Y,Z | RATING |
|---|---|---|---|---|---|---|---|---|---|---|
| "GC-1" | WALL "A" | [*] | 5 | - | - | - | - | - | - | 9 |
| "GC-2" | FLOOR | [*] | 35 | - | - | - | - | - | - | 8 |
| "GC-3" | WALL "B" | [*] | 40 | - | - | - | - | - | - | 8 |

GRAPHIC SCALES:

0 1' 2' 4' 8' 12' 16'

3/16"=1'-0"

| REVISION NO. | DATE | REVISIONS | BY |
|---|---|---|---|

ARTHER R. DAR
LICENSED PROFESSIONAL ENGINEER
No. 7808-S
HAWAII U.S.A.

Exp. Date: 4-30-20

THIS WORK WAS PREPARED BY ME OR UNDER MY SUPERVISION AND CONSTRUCTION OF THIS PROJECT WILL BE UNDER MY OBSERVATION

DEPARTMENT OF HAWAIIAN HOMELAND

# NANAKULI FLOOD CONTROL CHANNEL IMPROVEMENTS NANAKULI VALLEY, OAHU HAWAII

## CHANNEL SEGMENT [169] REPAIR DETAILS

| | |
|---|---|
| DESIGNED BY: | TTP |
| DRAWN BY: | AK, AP, DL |
| CHECKED BY: | AD |
| SUPV: | |
| DATE: | 03/05/2019 |


HAWAII ENGINEERING GROUP, Inc.
Civil & Structural Engineers
1088 BISHOP STREET #2506
HONOLULU, HI 96813
Tel: 808-533-2092


JOB NO.

SHEET C169

198 OF 225 SHTS

FILE ___ DRAWER ___ ___ FOLDER ___ ___

Plot date: 15-Apr-2020

Full Size Plot

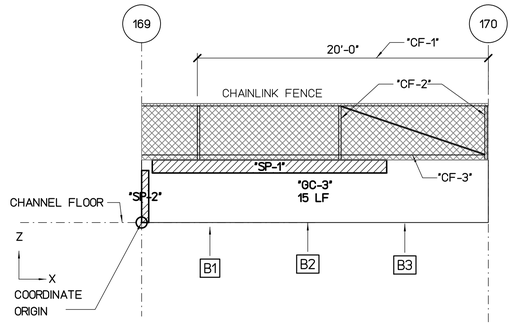


## WALL "B" FLATTEN VIEW

SCALE : 3/16" = 1'-0"

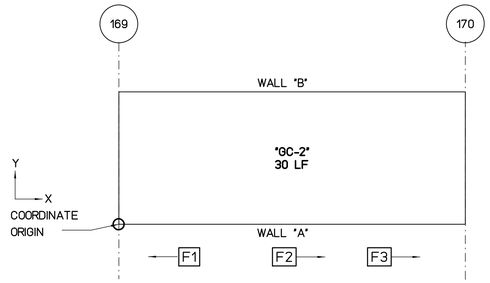


## FLOOR PLAN VIEW

SCALE : 3/16" = 1'-0"

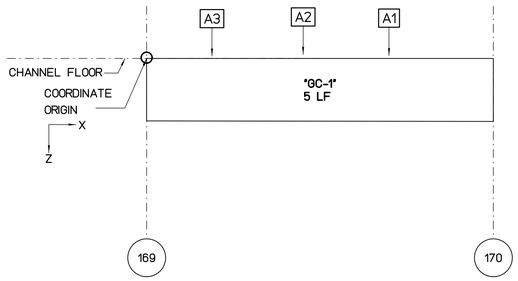


## WALL "A" FLATTEN VIEW

SCALE : 3/16" = 1'-0"

REPAIR LEGEND AND NOTES:

- [2] CRACK AND SPALL REPAIR TYPES, SEE SHEETS SR201 AND SR202 FOR DETAILS. TYPE [*] INDICATES NO-REPAIR
- (A) CHAINLINK FENCE REPAIR TYPES, SEE SHEETS SF201 AND SF202 FOR DETAILS
- 1.0 TOP OF WALL LEANING DISTANCE TOWARD CHANNEL IN INCHES, SEE SHEETS SL101 TO SL207 FOR CONCRETE LINING

PHOTO LEGEND:

- A1 WALL "A" ELEVATION PHOTO IDENTIFICATION SEE FLATTEN VIEW FOR PHOTO LOCATION
- B1 WALL "B" ELEVATION PHOTO IDENTIFICATION SEE FLATTEN VIEW FOR PHOTO LOCATION
- F1 CHANNEL FLOOR PHOTO IDENTIFICATION SEE FLOOR PLAN VIEW FOR PHOTO LOCATION

B1



B2



B3



F1



F2



F3



A1



A2



A3



### SPALL REPAIR CHART

| MARK | LOCATION | REPAIR TYPE | SPALL DIMENSION L | SPALL DIMENSION W | SPALL DIMENSION D | SPALL VOLUME | SPALL CENTER COORDINATE X | SPALL CENTER COORDINATE Y OR Z | RATING |
|---|---|---|---|---|---|---|---|---|---|
| "SP-1" | WALL "B" | [3] | 198 | 11 | 4 | 8712 | 9 | 4 | 6 |
| "SP-2" | WALL "B" | [3] | 6 | 44 | 4 | 1056 | 0.3 | 1.8 | 6 |

### CHAINLINK FENCE REPAIR CHART

| MARK | LOCATION | REPAIR TYPE | POSTS | TOP RAIL | BOTTOM WIRE | BRACE | FABRIC |
|---|---|---|---|---|---|---|---|
| "CF-1" | WALL "B" | (E) | - | - | - | - | DAMAGED 20'x4' |
| "CF-2" | WALL "B" | (A) | BENT 2 | - | - | - | - |
| "CF-3" | WALL "B" | (D) | - | - | DAMAGED 25' | - | - |

### CRACK REPAIR CHART

| MARK | LOCATION | REPAIR TYPE | GENERAL CRACKS (LF) | MAJOR CRACKS WIDTH (IN) | MAJOR CRACKS LENGTH (FT) | MAJOR CRACKS START PNT X | MAJOR CRACKS START PNT Y,Z | MAJOR CRACKS END PNT X | MAJOR CRACKS END PNT Y,Z | RATING |
|---|---|---|---|---|---|---|---|---|---|---|
| "GC-1" | WALL "A" | [*] | 5 | - | - | - | - | - | - | 9 |
| "GC-2" | FLOOR | [*] | 30 | - | - | - | - | - | - | 8 |
| "GC-3" | WALL "B" | [*] | 15 | - | - | - | - | - | - | 8 |

GRAPHIC SCALES:

0 1' 2' 4' 8' 12' 16'

3/16"=1'-0"

| REVISION NO. | DATE | REVISIONS | BY |
|---|---|---|---|

ATHER R. DAR
LICENSED PROFESSIONAL ENGINEER
No. 7808-S
HAWAII U.S.A.
Exp. Date: 4-30-20

THIS WORK WAS PREPARED BY ME OR UNDER MY SUPERVISION AND CONSTRUCTION OF THIS PROJECT WILL BE UNDER MY OBSERVATION

DEPARTMENT OF HAWAIIAN HOMELAND

NANAKULI FLOOD CONTROL
CHANNEL IMPROVEMENTS
NANAKULI VALLEY, OAHU HAWAII

CHANNEL SEGMENT [170] REPAIR DETAILS

| | |
|---|---|
| DESIGNED BY: | TTP |
| DRAWN BY: | AK, AP, DL |
| CHECKED BY: | AD |
| SUPV: | |
| DATE: | 03/05/2019 |

HAWAII ENGINEERING GROUP, Inc.
Civil & Structural Engineers
1088 BISHOP STREET #2506
HONOLULU, HI 96813
Tel: 808-533-2092

JOB NO.

SHEET C170
199 OF 225 SHTS

FILE ___ DRAWER ___ ___ FOLDER ___ ___

Plot date: 15-Apr-2020

Full Size Plot

Plot date: 15-Apr-2020
Full Size Plot

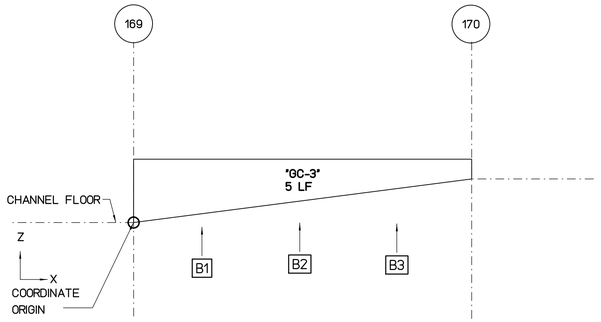


## WALL "B" FLATTEN VIEW

SCALE : 3/16" = 1'-0"

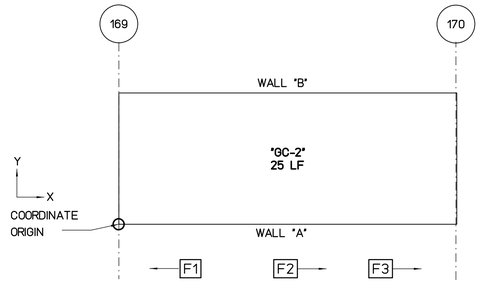


## FLOOR PLAN VIEW

SCALE : 3/16" = 1'-0"

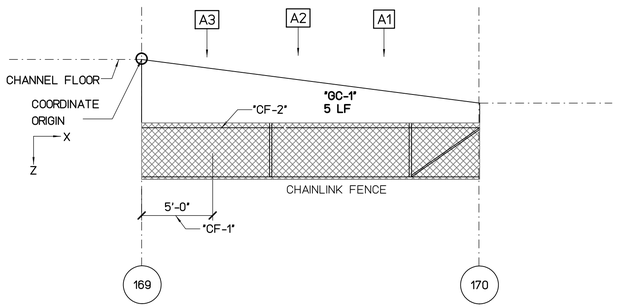


## WALL "A" FLATTEN VIEW

SCALE : 3/16" = 1'-0"

REPAIR LEGEND AND NOTES:

- [2] CRACK AND SPALL REPAIR TYPES, SEE SHEETS SR201 AND SR202 FOR DETAILS. TYPE [*] INDICATES NO-REPAIR
- (A) CHAINLINK FENCE REPAIR TYPES, SEE SHEETS SF201 AND SF202 FOR DETAILS
- [1.0] TOP OF WALL LEANING DISTANCE TOWARD CHANNEL IN INCHES, SEE SHEETS SL101 TO SL207 FOR CONCRETE LINING

PHOTO LEGEND:

- [A1] WALL "A" ELEVATION PHOTO IDENTIFICATION SEE FLATTEN VIEW FOR PHOTO LOCATION
- [B1] WALL "B" ELEVATION PHOTO IDENTIFICATION SEE FLATTEN VIEW FOR PHOTO LOCATION
- [F1] CHANNEL FLOOR PHOTO IDENTIFICATION SEE FLOOR PLAN VIEW FOR PHOTO LOCATION

B1



B2



B3



F1



F2



F3



A1



A2



A3



### SPALL REPAIR CHART

| MARK | LOCATION | REPAIR TYPE | SPALL DIMENSION | | | SPALL VOLUME | SPALL CENTER COORDINATE | | RATING |
|---|---|---|---|---|---|---|---|---|---|
| | | | L | W | D | | X | Y OR Z | |
| | | | | | | | | | |
| | | | | | | | | | |
| | | | | | | | | | |
| | | | | | | | | | |
| | | | | | | | | | |
| | | | | | | | | | |
| | | | | | | | | | |
| | | | | | | | | | |

### CHAINLINK FENCE REPAIR CHART

| MARK | LOCATION | REPAIR TYPE | POSTS | TOP RAIL | BOTTOM WIRE | BRACE | FABRIC |
|---|---|---|---|---|---|---|---|
| "CF-1" | WALL "A" | (E) | - | - | - | - | DAMAGED 5'x4' |
| "CF-2" | WALL "A" | (D) | - | - | DAMAGED 24' | - | - |
| | | | | | | | |
| | | | | | | | |
| | | | | | | | |
| | | | | | | | |
| | | | | | | | |
| | | | | | | | |
| | | | | | | | |
| | | | | | | | |

### CRACK REPAIR CHART

| MARK | LOCATION | REPAIR TYPE | GENERAL CRACKS (LF) | MAJOR CRACKS | | | | | | RATING |
|---|---|---|---|---|---|---|---|---|---|---|
| | | | | WIDTH (IN) | LENGTH (FT) | START PNT X | START PNT Y,Z | END PNT X | END PNT Y,Z | |
| "GC-1" | WALL "A" | [*] | 5 | - | - | - | - | - | - | 9 |
| "GC-2" | FLOOR | [*] | 25 | - | - | - | - | - | - | 8 |
| "GC-3" | WALL "B" | [*] | 5 | - | - | - | - | - | - | 9 |
| | | | | | | | | | | |
| | | | | | | | | | | |
| | | | | | | | | | | |
| | | | | | | | | | | |

GRAPHIC SCALES:

0 1' 2' 4' 8' 12' 16'

3/16"=1'-0"

| REVISION NO. | DATE | REVISIONS | BY |
|---|---|---|---|
| | | | |

A'HER R DAR
LICENSED PROFESSIONAL ENGINEER
No. 7808-S
HAWAII U.S.A.

Exp. Date: 4-30-20

THIS WORK WAS PREPARED BY ME OR UNDER MY SUPERVISION AND CONSTRUCTION OF THIS PROJECT WILL BE UNDER MY OBSERVATION

DEPARTMENT OF HAWAIIAN HOMELAND

# NANAKULI FLOOD CONTROL CHANNEL IMPROVEMENTS NANAKULI VALLEY, OAHU HAWAII

## CHANNEL SEGMENT [170R] REPAIR DETAILS

| | |
|---|---|
| DESIGNED BY: | TTP |
| DRAWN BY: | AK, AP, DL |
| CHECKED BY: | AD |
| SUPV: | |
| DATE: | 03/05/2019 |

HAWAII ENGINEERING GROUP, Inc.
Civil & Structural Engineers
1088 BISHOP STREET #2506
HONOLULU, HI 96813
Tel: 808-533-2092

JOB NO.

SHEET C170R

200 OF 225 SHTS

FILE ___ DRAWER ___ ___ FOLDER ___ ___

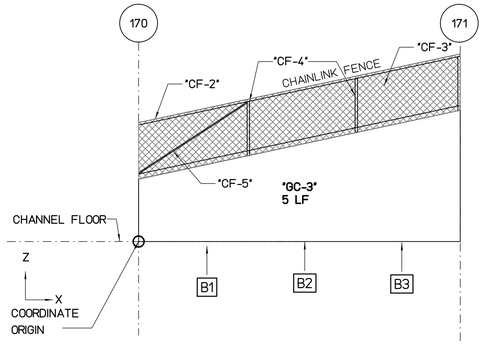


## WALL "B" FLATTEN VIEW

SCALE : 3/16" = 1'-0"

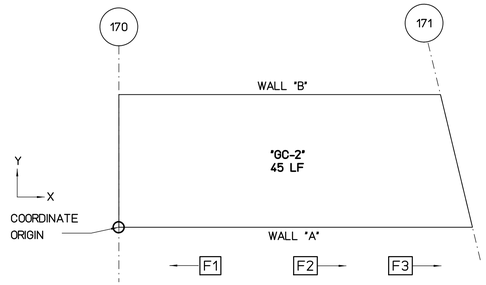


## FLOOR PLAN VIEW

SCALE : 3/16" = 1'-0"

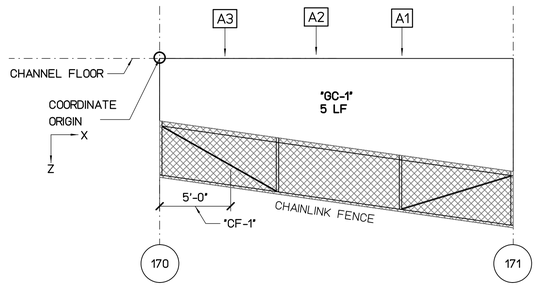


## WALL "A" FLATTEN VIEW

SCALE : 3/16" = 1'-0"

REPAIR LEGEND AND NOTES:

- 2 — CRACK AND SPALL REPAIR TYPES, SEE SHEETS SR201 AND SR202 FOR DETAILS. TYPE [*] INDICATES NO-REPAIR
- (A) — CHAINLINK FENCE REPAIR TYPES, SEE SHEETS SF201 AND SF202 FOR DETAILS
- 1.0 — TOP OF WALL LEANING DISTANCE TOWARD CHANNEL IN INCHES, SEE SHEETS SL101 TO SL207 FOR CONCRETE LINING

PHOTO LEGEND:

- A1 — WALL "A" ELEVATION PHOTO IDENTIFICATION SEE FLATTEN VIEW FOR PHOTO LOCATION
- B1 — WALL "B" ELEVATION PHOTO IDENTIFICATION SEE FLATTEN VIEW FOR PHOTO LOCATION
- F1 — CHANNEL FLOOR PHOTO IDENTIFICATION SEE FLOOR PLAN VIEW FOR PHOTO LOCATION

B1



B2



B3



F1



F2



F3



A1



A2



A3



### SPALL REPAIR CHART

| MARK | LOCATION | REPAIR TYPE | SPALL DIMENSION | | | SPALL VOLUME | SPALL CENTER COORDINATE | | RATING |
|---|---|---|---|---|---|---|---|---|---|
| | | | L | W | D | | X | Y OR Z | |
| | | | | | | | | | |
| | | | | | | | | | |
| | | | | | | | | | |
| | | | | | | | | | |
| | | | | | | | | | |
| | | | | | | | | | |
| | | | | | | | | | |
| | | | | | | | | | |

### CHAINLINK FENCE REPAIR CHART

| MARK | LOCATION | REPAIR TYPE | POSTS | TOP RAIL | BOTTOM WIRE | BRACE | FABRIC |
|---|---|---|---|---|---|---|---|
| "CF-1" | WALL "A" | (E) | - | - | - | - | DAMAGED 5'x4' |
| "CF-2" | WALL "B" | (C) | - | DAMAGED 23' | - | - | - |
| "CF-3" | WALL "B" | (E) | - | - | - | - | DAMAGED 23'x4' |
| "CF-4" | WALL "B" | (A) | DAMAGED 2 | - | - | - | - |
| "CF-5" | WALL "B" | (B) | - | - | - | DAMAGED 1 | - |
| | | | | | | | |
| | | | | | | | |
| | | | | | | | |
| | | | | | | | |
| | | | | | | | |

### CRACK REPAIR CHART

| MARK | LOCATION | REPAIR TYPE | GENERAL CRACKS (LF) | MAJOR CRACKS | | | | | | RATING |
|---|---|---|---|---|---|---|---|---|---|---|
| | | | | WIDTH (IN) | LENGTH (FT) | START PNT X | START PNT Y,Z | END PNT X | END PNT Y,Z | |
| "GC-1" | WALL "A" | [*] | 5 | - | - | - | - | - | - | 9 |
| "GC-2" | FLOOR | [*] | 45 | - | - | - | - | - | - | 8 |
| "GC-3" | WALL "B" | [*] | 5 | - | - | - | - | - | - | 9 |
| | | | | | | | | | | |
| | | | | | | | | | | |
| | | | | | | | | | | |
| | | | | | | | | | | |

GRAPHIC SCALES:

0 1' 2' 4' 8' 12' 16'

3/16"=1'-0"

| REVISION NO. | DATE | REVISIONS | BY |
|---|---|---|---|
| | | | |

ATHER R. DAR
LICENSED PROFESSIONAL ENGINEER
No. 7808-S
HAWAII U.S.A.

Exp. Date: 4-30-20

THIS WORK WAS PREPARED BY ME OR UNDER MY SUPERVISION AND CONSTRUCTION OF THIS PROJECT WILL BE UNDER MY OBSERVATION

DEPARTMENT OF HAWAIIAN HOMELAND

# NANAKULI FLOOD CONTROL CHANNEL IMPROVEMENTS NANAKULI VALLEY, OAHU HAWAII

## CHANNEL SEGMENT 171 REPAIR DETAILS

| | |
|---|---|
| DESIGNED BY: | TTP |
| DRAWN BY: | AK, AP, DL |
| CHECKED BY: | AD |
| SUPV: | |
| DATE: | 03/05/2019 |


HAWAII ENGINEERING GROUP, Inc.
Civil & Structural Engineers
1088 BISHOP STREET #2506
HONOLULU, HI 96813
Tel: 808-533-2092


JOB NO.

SHEET C171

201OF 225 SHTS

FILE ___ DRAWER ___ ___ FOLDER ___ ___

Plot date: 15-Apr-2020

Full Size Plot

Plot date: 15-Apr-2020
Full Size Plot

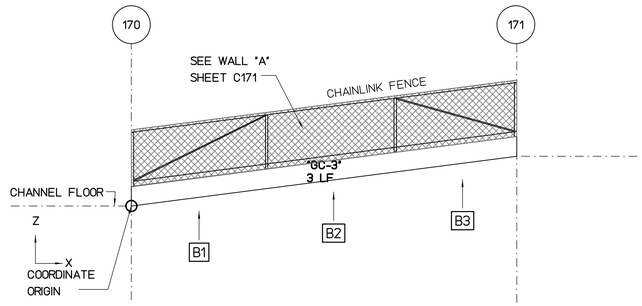


## WALL "B" FLATTEN VIEW

SCALE : 3/16" = 1'-0"

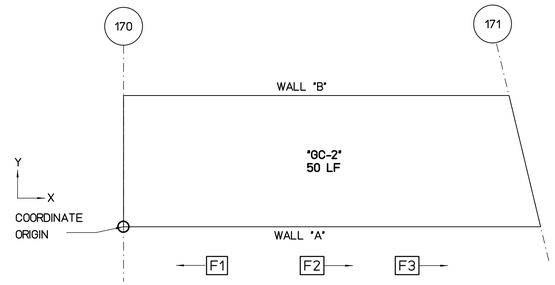


## FLOOR PLAN VIEW

SCALE : 3/16" = 1'-0"

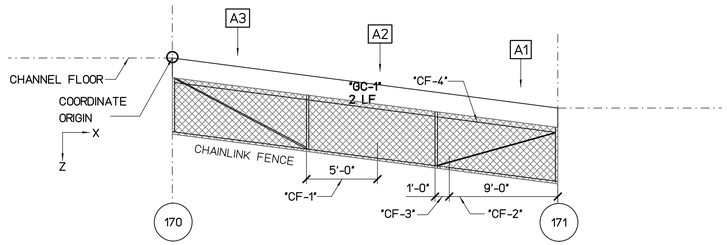


## WALL "A" FLATTEN VIEW

SCALE : 3/16" = 1'-0"

NOTE:

FOR CATTLE GATE PLAN AND DETAILS, SEE SHEET SF203.

REPAIR LEGEND AND NOTES:

- [2] CRACK AND SPALL REPAIR TYPES, SEE SHEETS SR201 AND SR202 FOR DETAILS. TYPE [*] INDICATES NO-REPAIR
- (A) CHAINLINK FENCE REPAIR TYPES, SEE SHEETS SF201 AND SF202 FOR DETAILS
- [1.0] TOP OF WALL LEANING DISTANCE TOWARD CHANNEL IN INCHES, SEE SHEETS SL101 TO SL207 FOR CONCRETE LINING

PHOTO LEGEND:

- [A1] WALL "A" ELEVATION PHOTO IDENTIFICATION SEE FLATTEN VIEW FOR PHOTO LOCATION
- [B1] WALL "B" ELEVATION PHOTO IDENTIFICATION SEE FLATTEN VIEW FOR PHOTO LOCATION
- [F1] CHANNEL FLOOR PHOTO IDENTIFICATION SEE FLOOR PLAN VIEW FOR PHOTO LOCATION

B1



B2



B3



F1



F2



F3



A1



A2



A3



### SPALL REPAIR CHART

| MARK | LOCATION | REPAIR TYPE | SPALL DIMENSION | | | SPALL VOLUME | SPALL CENTER COORDINATE | | RATING |
|---|---|---|---|---|---|---|---|---|---|
| | | | L | W | D | | X | Y OR Z | |
| | | | | | | | | | |
| | | | | | | | | | |
| | | | | | | | | | |
| | | | | | | | | | |
| | | | | | | | | | |
| | | | | | | | | | |
| | | | | | | | | | |

### CHAINLINK FENCE REPAIR CHART

| MARK | LOCATION | REPAIR TYPE | POSTS | TOP RAIL | BOTTOM WIRE | BRACE | FABRIC |
|---|---|---|---|---|---|---|---|
| "CF-1" | WALL "A" | (C) | - | DAMAGED 5' | - | - | - |
| "CF-2" | WALL "A" | (C) | - | DAMAGED 9' | - | - | - |
| "CF-3" | WALL "A" | (C) | - | MISSING 1' | - | - | - |
| "CF-4" | WALL "A" | (D) | - | - | DAMAGED 10' | - | - |
| | | | | | | | |
| | | | | | | | |
| | | | | | | | |
| | | | | | | | |
| | | | | | | | |
| | | | | | | | |

### CRACK REPAIR CHART

| MARK | LOCATION | REPAIR TYPE | GENERAL CRACKS (LF) | MAJOR CRACKS | | | | | | RATING |
|---|---|---|---|---|---|---|---|---|---|---|
| | | | | WIDTH (IN) | LENGTH (FT) | START PNT X | START PNT Y,Z | END PNT X | END PNT Y,Z | |
| "GC-1" | WALL "A" | [*] | 2 | - | - | - | - | - | - | 9 |
| "GC-2" | FLOOR | [*] | 50 | - | - | - | - | - | - | 8 |
| "GC-3" | WALL "B" | [*] | 3 | - | - | - | - | - | - | 9 |
| | | | | | | | | | | |
| | | | | | | | | | | |
| | | | | | | | | | | |
| | | | | | | | | | | |

GRAPHIC SCALES:

0 1' 2' 4' 8' 12' 16'

3/16"=1'-0"

| REVISION NO. | DATE | REVISIONS | BY |
|---|---|---|---|
| | | | |

ARTHER R DAR
LICENSED PROFESSIONAL ENGINEER
No. 7808-S
HAWAII U.S.A.

Exp. Date: 4-30-20

THIS WORK WAS PREPARED BY ME OR UNDER MY SUPERVISION AND CONSTRUCTION OF THIS PROJECT WILL BE UNDER MY OBSERVATION

DEPARTMENT OF HAWAIIAN HOMELAND

# NANAKULI FLOOD CONTROL CHANNEL IMPROVEMENTS NANAKULI VALLEY, OAHU HAWAII

## CHANNEL SEGMENT [171R] REPAIR DETAILS

| | |
|---|---|
| DESIGNED BY: | TTP |
| DRAWN BY: | AK, AP, DL |
| CHECKED BY: | AD |
| SUPV: | |
| DATE: | 03/05/2019 |

HAWAII ENGINEERING GROUP, Inc.
Civil & Structural Engineers
1088 BISHOP STREET #2506
HONOLULU, HI 96813
Tel: 808-533-2092

JOB NO.

SHEET C171R

2020F 225 SHTS

FILE __ DRAWER __ FOLDER __

Plot date: 15-Apr-2020
Full Size Plot

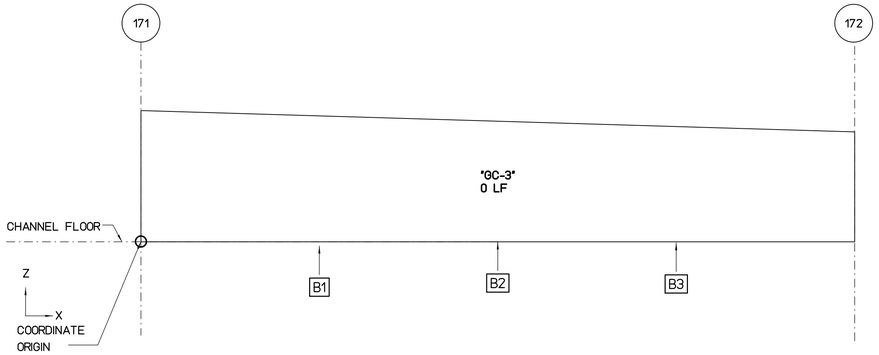


## WALL "B" FLATTEN VIEW (NIC)

SCALE : 3/16" = 1'-0"

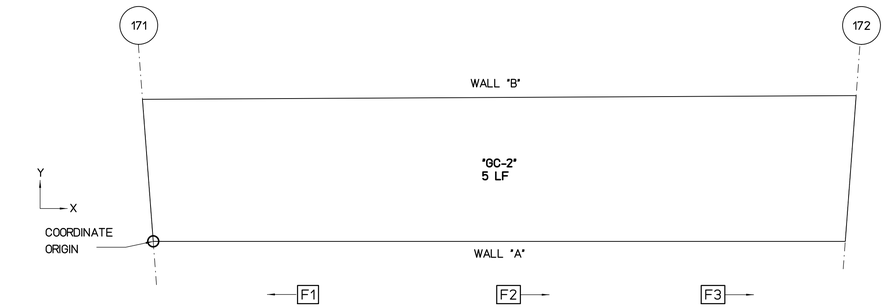


## FLOOR PLAN VIEW

SCALE : 3/16" = 1'-0"

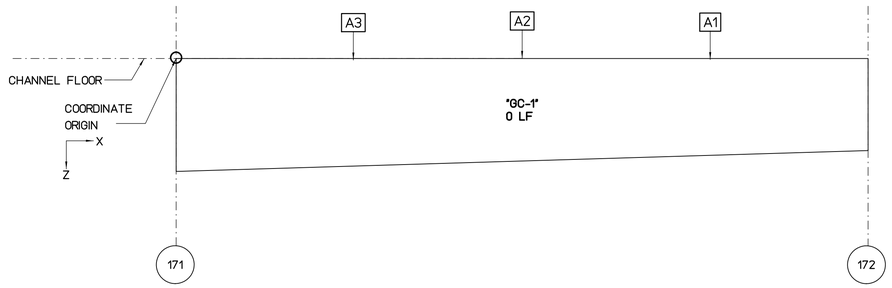


## WALL "A" FLATTEN VIEW (NIC)

SCALE : 3/16" = 1'-0"

REPAIR LEGEND AND NOTES:

- 2 — CRACK AND SPALL REPAIR TYPES, SEE SHEETS SR201 AND SR202 FOR DETAILS. TYPE [*] INDICATES NO-REPAIR
- (A) — CHAINLINK FENCE REPAIR TYPES, SEE SHEETS SF201 AND SF202 FOR DETAILS
- 1.0 — TOP OF WALL LEANING DISTANCE TOWARD CHANNEL IN INCHES, SEE SHEETS SL101 TO SL207 FOR CONCRETE LINING

PHOTO LEGEND:

- A1 — WALL "A" ELEVATION PHOTO IDENTIFICATION SEE FLATTEN VIEW FOR PHOTO LOCATION
- B1 — WALL "B" ELEVATION PHOTO IDENTIFICATION SEE FLATTEN VIEW FOR PHOTO LOCATION
- F1 — CHANNEL FLOOR PHOTO IDENTIFICATION SEE FLOOR PLAN VIEW FOR PHOTO LOCATION

B1



B2



B3



F1



F2



F3



A1



A2



A3



### SPALL REPAIR CHART

| MARK | LOCATION | REPAIR TYPE | SPALL DIMENSION | | | SPALL VOLUME | SPALL CENTER COORDINATE | | RATING |
|---|---|---|---|---|---|---|---|---|---|
| | | | L | W | D | | X | Y OR Z | |
| | | | | | | | | | |
| | | | | | | | | | |
| | | | | | | | | | |
| | | | | | | | | | |
| | | | | | | | | | |
| | | | | | | | | | |
| | | | | | | | | | |
| | | | | | | | | | |

### CHAINLINK FENCE REPAIR CHART

| MARK | LOCATION | REPAIR TYPE | POSTS | TOP RAIL | BOTTOM WIRE | BRACE | FABRIC |
|---|---|---|---|---|---|---|---|
| | | | | | | | |
| | | | | | | | |
| | | | | | | | |
| | | | | | | | |
| | | | | | | | |
| | | | | | | | |
| | | | | | | | |
| | | | | | | | |
| | | | | | | | |

### CRACK REPAIR CHART

| MARK | LOCATION | REPAIR TYPE | GENERAL CRACKS (LF) | MAJOR CRACKS | | | | | | RATING |
|---|---|---|---|---|---|---|---|---|---|---|
| | | | | WIDTH (IN) | LENGTH (FT) | START PNT | | END PNT | | |
| | | | | | | X | Y,Z | X | Y,Z | |
| "GC-1" | WALL "A" | [*] | 0 | - | - | - | - | - | - | 10 |
| "GC-2" | FLOOR | [*] | 5 | - | - | - | - | - | - | 9 |
| "GC-3" | WALL "B" | [*] | 0 | - | - | - | - | - | - | 10 |
| | | | | | | | | | | |
| | | | | | | | | | | |
| | | | | | | | | | | |
| | | | | | | | | | | |

GRAPHIC SCALES:

0 1' 2' 4' 8' 12' 16'

3/16"=1'-0"

| REVISION NO. | DATE | REVISIONS | BY |
|---|---|---|---|
| | | | |

ARTHER R. DAR
LICENSED PROFESSIONAL ENGINEER
No. 7808-S
HAWAII U.S.A.
Exp. Date: 4-30-20

THIS WORK WAS PREPARED BY ME OR UNDER MY SUPERVISION AND CONSTRUCTION OF THIS PROJECT WILL BE UNDER MY OBSERVATION

DEPARTMENT OF HAWAIIAN HOMELAND

# NANAKULI FLOOD CONTROL CHANNEL IMPROVEMENTS NANAKULI VALLEY, OAHU HAWAII

CHANNEL SEGMENT 172 REPAIR DETAILS

| | |
|---|---|
| DESIGNED BY: | TTP |
| DRAWN BY: | AK, AP, DL |
| CHECKED BY: | AD |
| SUPV: | |
| DATE: | 03/05/2019 |

HAWAII ENGINEERING GROUP, Inc.
Civil & Structural Engineers
1088 BISHOP STREET #2506
HONOLULU, HI 96813
Tel: 808-533-2092

JOB NO.

SHEET C172

203 OF 225 SHTS

FILE ___ DRAWER ___ ___ FOLDER ___ ___

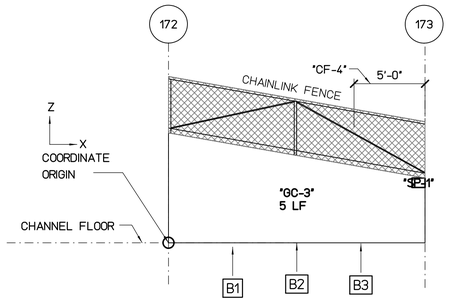


## WALL "B" FLATTEN VIEW

SCALE : 3/16" = 1'-0"

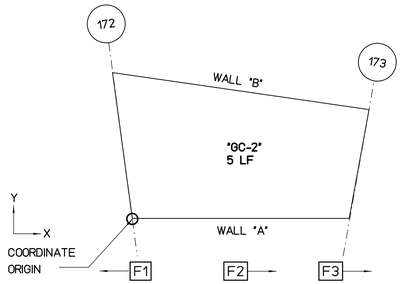


## FLOOR PLAN VIEW

SCALE : 3/16" = 1'-0"

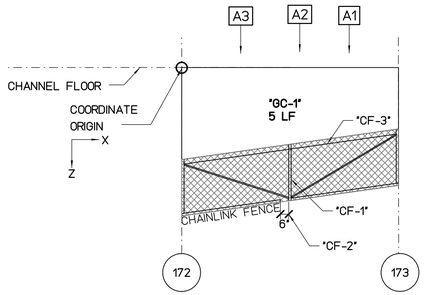


## WALL "A" FLATTEN VIEW

SCALE : 3/16" = 1'-0"

REPAIR LEGEND AND NOTES:

- 2 — CRACK AND SPALL REPAIR TYPES, SEE SHEETS SR201 AND SR202 FOR DETAILS. TYPE ✱ INDICATES NO-REPAIR
- Ⓐ — CHAINLINK FENCE REPAIR TYPES, SEE SHEETS SF201 AND SF202 FOR DETAILS
- 1.0 — TOP OF WALL LEANING DISTANCE TOWARD CHANNEL IN INCHES, SEE SHEETS SL101 TO SL207 FOR CONCRETE LINING

PHOTO LEGEND:

- A1 — WALL "A" ELEVATION PHOTO IDENTIFICATION SEE FLATTEN VIEW FOR PHOTO LOCATION
- B1 — WALL "B" ELEVATION PHOTO IDENTIFICATION SEE FLATTEN VIEW FOR PHOTO LOCATION
- F1 — CHANNEL FLOOR PHOTO IDENTIFICATION SEE FLOOR PLAN VIEW FOR PHOTO LOCATION

B1



B2



B3



F1



F2



F3



A1



A2



A3



### SPALL REPAIR CHART

| MARK | LOCATION | REPAIR TYPE | SPALL DIMENSION L | SPALL DIMENSION W | SPALL DIMENSION D | SPALL VOLUME | SPALL CENTER COORDINATE X | SPALL CENTER COORDINATE Y OR Z | RATING |
|---|---|---|---|---|---|---|---|---|---|
| "SP-1" | WALL "B" | 3 | 11 | 8 | 3 | 264 | 17 | 4.5 | 7 |

### CHAINLINK FENCE REPAIR CHART

| MARK | LOCATION | REPAIR TYPE | POSTS | TOP RAIL | BOTTOM WIRE | BRACE | FABRIC |
|---|---|---|---|---|---|---|---|
| "CF-1" | WALL "A" | Ⓐ | BENT 1 | - | - | - | - |
| "CF-2" | WALL "A" | Ⓒ | - | MISSING 6" | - | - | |
| "CF-3" | WALL "A" | Ⓓ | - | - | DAMAGED 15' | - | - |
| "CF-4" | WALL "B" | Ⓔ | - | - | - | - | DAMAGED 5'x4' |

### CRACK REPAIR CHART

| MARK | LOCATION | REPAIR TYPE | GENERAL CRACKS (LF) | MAJOR CRACKS WIDTH (IN) | MAJOR CRACKS LENGTH (FT) | MAJOR CRACKS START PNT X | MAJOR CRACKS START PNT Y,Z | MAJOR CRACKS END PNT X | MAJOR CRACKS END PNT Y,Z | RATING |
|---|---|---|---|---|---|---|---|---|---|---|
| "GC-1" | WALL "A" | ✱ | 5 | - | - | - | - | - | - | 9 |
| "GC-2" | FLOOR | ✱ | 5 | - | - | - | - | - | - | 9 |
| "GC-3" | WALL "B" | ✱ | 5 | - | - | - | - | - | - | 9 |

GRAPHIC SCALES:

0 1' 2' 4' 8' 12' 16'

3/16"=1'-0"

| REVISION NO. | DATE | REVISIONS | BY |
|---|---|---|---|

ARTHUR DARLEY LICENSED PROFESSIONAL ENGINEER No. 7808-S HAWAII U.S.A.

Exp. Date: 4-30-20

THIS WORK WAS PREPARED BY ME OR UNDER MY SUPERVISION AND CONSTRUCTION OF THIS PROJECT WILL BE UNDER MY OBSERVATION

DEPARTMENT OF HAWAIIAN HOMELAND

NANAKULI FLOOD CONTROL
CHANNEL IMPROVEMENTS
NANAKULI VALLEY, OAHU HAWAII

CHANNEL SEGMENT 173 REPAIR DETAILS

DESIGNED BY: TTP
DRAWN BY: AK, AP, DL
CHECKED BY: AD
SUPV:
DATE: 03/05/2019

HAWAII ENGINEERING GROUP, Inc.
Civil & Structural Engineers
1088 BISHOP STREET #2506
HONOLULU, HI 96813
Tel: 808-533-2092

JOB NO.

SHEET C173
204 OF 225 SHTS

FILE ___ DRAWER ___ ___ FOLDER ___ ___

Plot date: 15-Apr-2020

Full Size Plot

Plot date: 15-Apr-2020
Full Size Plot

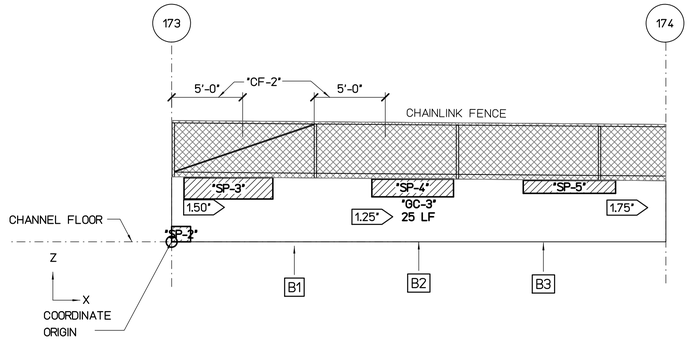


## WALL "B" FLATTEN VIEW

SCALE : 3/16" = 1'-0"

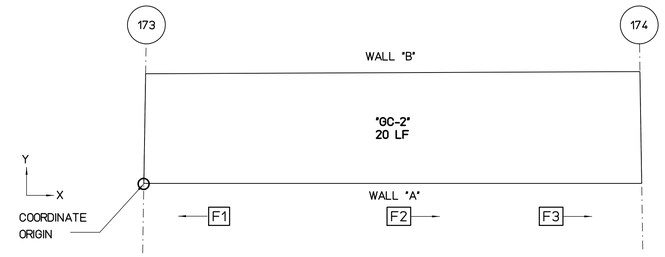


## FLOOR PLAN VIEW

SCALE : 3/16" = 1'-0"

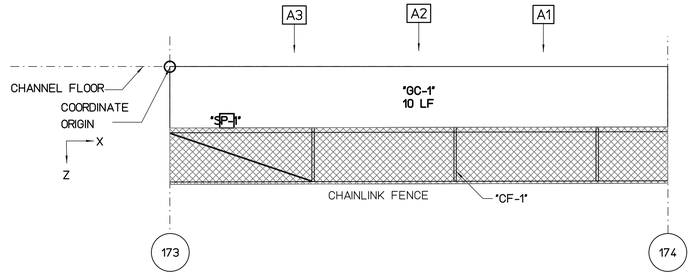


## WALL "A" FLATTEN VIEW

SCALE : 3/16" = 1'-0"

REPAIR LEGEND AND NOTES:

- 2 — CRACK AND SPALL REPAIR TYPES, SEE SHEETS SR201 AND SR202 FOR DETAILS. TYPE [*] INDICATES NO-REPAIR
- (A) — CHAINLINK FENCE REPAIR TYPES, SEE SHEETS SF201 AND SF202 FOR DETAILS
- 1.0 — TOP OF WALL LEANING DISTANCE TOWARD CHANNEL IN INCHES, SEE SHEETS SL101 TO SL207 FOR CONCRETE LINING

PHOTO LEGEND:

- A1 — WALL "A" ELEVATION PHOTO IDENTIFICATION SEE FLATTEN VIEW FOR PHOTO LOCATION
- B1 — WALL "B" ELEVATION PHOTO IDENTIFICATION SEE FLATTEN VIEW FOR PHOTO LOCATION
- F1 — CHANNEL FLOOR PHOTO IDENTIFICATION SEE FLOOR PLAN VIEW FOR PHOTO LOCATION

B1



B2



B3



F1



F2



F3



A1



A2



A3



### SPALL REPAIR CHART

| MARK | LOCATION | REPAIR TYPE | SPALL DIMENSION L | SPALL DIMENSION W | SPALL DIMENSION D | SPALL VOLUME | SPALL CENTER COORDINATE X | SPALL CENTER COORDINATE Y OR Z | RATING |
|---|---|---|---|---|---|---|---|---|---|
| "SP-1" | WALL "A" | [*] | 12 | 12 | 3 | 432 | 3.8 | -70.4 | 7 |
| "SP-2" | WALL "B" | [*] | 16 | 13 | 4 | 832 | 0.5 | 0.5 | 6 |
| "SP-3" | WALL "B" | [*] | 75 | 18 | 3 | 4050 | 4 | 3.8 | 7 |
| "SP-4" | WALL "B" | [*] | 69 | 15 | 3 | 3105 | 17 | 3.8 | 7 |
| "SP-5" | WALL "B" | [*] | 78 | 11 | 3 | 2574 | 28 | 3.9 | 7 |

### CHAINLINK FENCE REPAIR CHART

| MARK | LOCATION | REPAIR TYPE | POSTS | TOP RAIL | BOTTOM WIRE | BRACE | FABRIC |
|---|---|---|---|---|---|---|---|
| "CF-1" | WALL "A" | (A) | BENT 1 | - | - | - | - |
| "CF-2" | WALL "B" | (E) | - | - | - | - | DAMAGED 10'x4' |

### CRACK REPAIR CHART

| MARK | LOCATION | REPAIR TYPE | GENERAL CRACKS (LF) | MAJOR CRACKS WIDTH (IN) | MAJOR CRACKS LENGTH (FT) | MAJOR CRACKS START PNT X | MAJOR CRACKS START PNT Y,Z | MAJOR CRACKS END PNT X | MAJOR CRACKS END PNT Y,Z | RATING |
|---|---|---|---|---|---|---|---|---|---|---|
| "GC-1" | WALL "A" | [*] | 10 | - | - | - | - | - | - | 8 |
| "GC-2" | FLOOR | [*] | 20 | - | - | - | - | - | - | 8 |
| "GC-3" | WALL "B" | [*] | 25 | - | - | - | - | - | - | 8 |

NOTES:

1- CONCRETE LINING IS PROVIDED IN THIS SEGMENT SEE SHEET SL207

2- THERE IS NO SPALL AND CRACK REPAIRS IN THIS SEGMENT

GRAPHIC SCALES:

0 1' 2' 4' 8' 12' 16'

3/16"=1'-0"

| REVISION NO. | DATE | REVISIONS | BY |
|---|---|---|---|

ATHER R. DAR
LICENSED PROFESSIONAL ENGINEER
No. 7808-S
HAWAII U.S.A.
Exp. Date: 4-30-20

THIS WORK WAS PREPARED BY ME OR UNDER MY SUPERVISION AND CONSTRUCTION OF THIS PROJECT WILL BE UNDER MY OBSERVATION

DEPARTMENT OF HAWAIIAN HOMELAND

# NANAKULI FLOOD CONTROL CHANNEL IMPROVEMENTS NANAKULI VALLEY, OAHU HAWAII

CHANNEL SEGMENT 174 REPAIR DETAILS

DESIGNED BY: TTP
DRAWN BY: AK, AP, DL
CHECKED BY: AD
SUPV:
DATE: 03/05/2019

HAWAII ENGINEERING GROUP, Inc.
Civil & Structural Engineers
1088 BISHOP STREET #2506
HONOLULU, HI 96813
Tel: 808-533-2092

JOB NO.

SHEET C174
205 OF 225 SHTS

FILE ___ DRAWER ___ ___ FOLDER ___ ___

Plot date: 15-Apr-2020
Full Size Plot

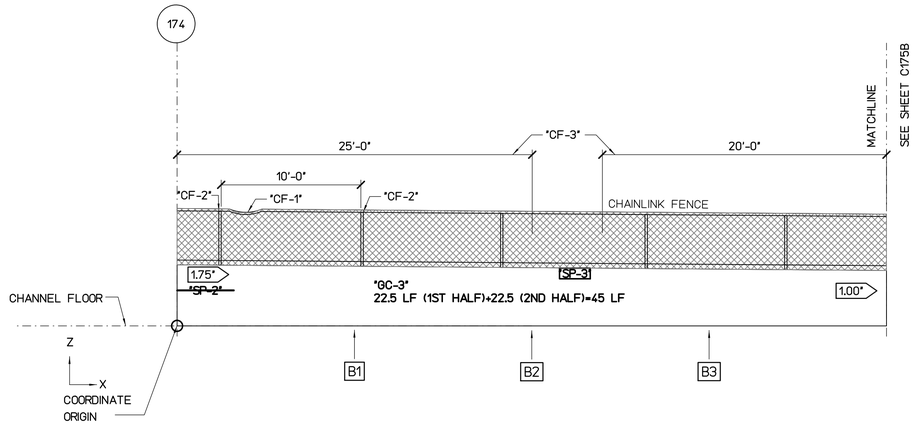


## WALL "B" FLATTEN VIEW

SCALE : 3/16" = 1'-0"

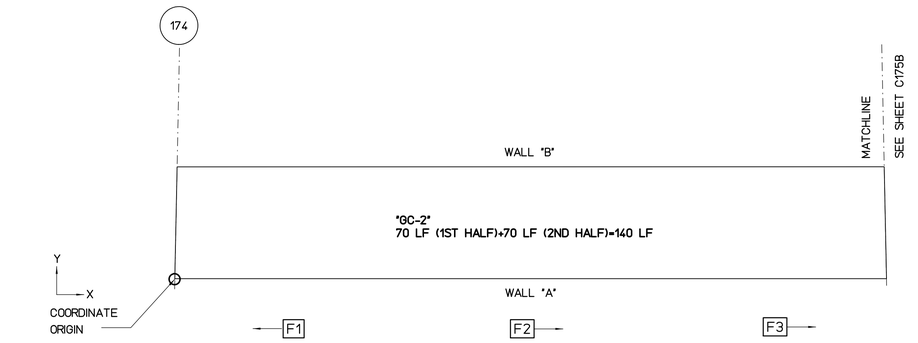


## FLOOR PLAN VIEW

SCALE : 3/16" = 1'-0"

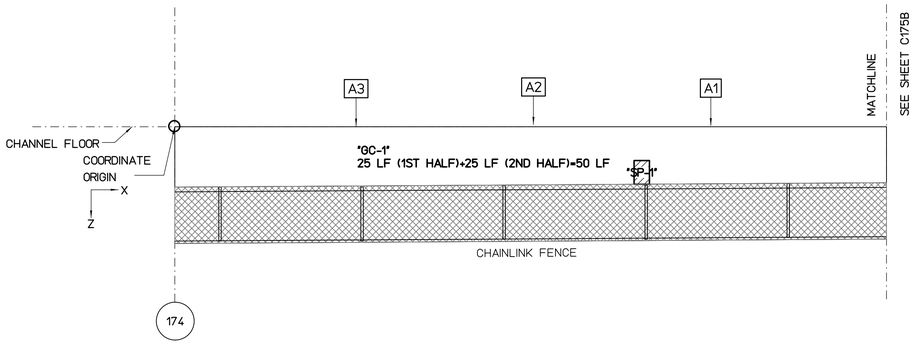


## WALL "A" FLATTEN VIEW

SCALE : 3/16" = 1'-0"

REPAIR LEGEND AND NOTES:

- [2] CRACK AND SPALL REPAIR TYPES, SEE SHEETS SR201 AND SR202 FOR DETAILS. TYPE [*] INDICATES NO-REPAIR
- (A) CHAINLINK FENCE REPAIR TYPES, SEE SHEETS SF201 AND SF202 FOR DETAILS
- 1.0 TOP OF WALL LEANING DISTANCE TOWARD CHANNEL IN INCHES, SEE SHEETS SL101 TO SL207 FOR CONCRETE LINING

PHOTO LEGEND:

- A1 WALL "A" ELEVATION PHOTO IDENTIFICATION SEE FLATTEN VIEW FOR PHOTO LOCATION
- B1 WALL "B" ELEVATION PHOTO IDENTIFICATION SEE FLATTEN VIEW FOR PHOTO LOCATION
- F1 CHANNEL FLOOR PHOTO IDENTIFICATION SEE FLOOR PLAN VIEW FOR PHOTO LOCATION

B1

B2

B3


F1

F2

F3


A1

A2

A3


### SPALL REPAIR CHART

| MARK | LOCATION | REPAIR TYPE | SPALL DIMENSION L | SPALL DIMENSION W | SPALL DIMENSION D | SPALL VOLUME | SPALL CENTER COORDINATE X | SPALL CENTER COORDINATE Y OR Z | RATING |
|---|---|---|---|---|---|---|---|---|---|
| "SP-1" | WALL "A" | [*] | 13 | 20 | 2 | 520 | 33 | 4 | 7 |
| "SP-2" | WALL "B" | [*] | 48 | 0.5 | 3 | 72 | 0.5 | 2.5 | 7 |
| "SP-3" | WALL "B" | [*] | 26 | 9 | 2 | 468 | 28 | 4 | 7 |
| "SP-4" | WALL "B" | [*] | 93 | 9 | 3 | 2511 | 56 | 4 | 7 |
| "SP-5" | WALL "B" | [*] | 44 | 16 | 2 | 1408 | 76 | 4 | 7 |
| "SP-6" | WALL "B" | [*] | 29 | 12 | 3 | 1044 | 84 | 4 | 7 |

### CHAINLINK FENCE REPAIR CHART

| MARK | LOCATION | REPAIR TYPE | POSTS | TOP RAIL | BOTTOM WIRE | BRACE | FABRIC |
|---|---|---|---|---|---|---|---|
| "CF-1" | WALL "B" | (C) | - | BENT 10" | - | - | - |
| "CF-2" | WALL "B" | (A) | BENT 2 | - | - | - | - |
| "CF-3" | WALL "B" | (E) | - | - | - | - | DAMAGED 45'x4' |

### CRACK REPAIR CHART

| MARK | LOCATION | REPAIR TYPE | GENERAL CRACKS (LF) | MAJOR CRACKS WIDTH (IN) | MAJOR CRACKS LENGTH (FT) | MAJOR CRACKS START PNT X | MAJOR CRACKS START PNT Y,Z | MAJOR CRACKS END PNT X | MAJOR CRACKS END PNT Y,Z | RATING |
|---|---|---|---|---|---|---|---|---|---|---|
| "GC-1" | WALL "A" | [*] | 50 | - | - | - | - | - | - | 8 |
| "GC-2" | FLOOR | [*] | 140 | - | - | - | - | - | - | 8 |
| "GC-3" | WALL "B" | [*] | 45 | - | - | - | - | - | - | 8 |

NOTES:

1- CONCRETE LINING IS PROVIDED IN THIS SEGMENT SEE SHEET SL207

2- THERE IS NO SPALL AND CRACK REPAIRS IN THIS SEGMENT

GRAPHIC SCALES:

0 1' 2' 4' 8' 12' 16'

3/16"=1'-0"

| REVISION NO. | DATE | REVISIONS | BY |
|---|---|---|---|

ATHER R. DAR
LICENSED PROFESSIONAL ENGINEER
No. 7808-S
HAWAII U.S.A.
Exp. Date: 4-30-20

THIS WORK WAS PREPARED BY ME OR UNDER MY SUPERVISION AND CONSTRUCTION OF THIS PROJECT WILL BE UNDER MY OBSERVATION

DEPARTMENT OF HAWAIIAN HOMELAND

# NANAKULI FLOOD CONTROL CHANNEL IMPROVEMENTS NANAKULI VALLEY, OAHU HAWAII

## CHANNEL SEGMENT 175 REPAIR DETAILS - 1ST HALF

| | |
|---|---|
| DESIGNED BY: | TTP |
| DRAWN BY: | AK, AP, DL |
| CHECKED BY: | AD |
| SUPV: | |
| DATE: | 03/05/2019 |

HAWAII ENGINEERING GROUP, Inc.
Civil & Structural Engineers
1088 BISHOP STREET #2506
HONOLULU, HI 96813
Tel: 808-533-2092

JOB NO.

SHEET C175A

206 OF 225 SHTS

FILE ___ DRAWER ___ ___ FOLDER ___ ___

Plot date: 15-Apr-2020
Full Size Plot

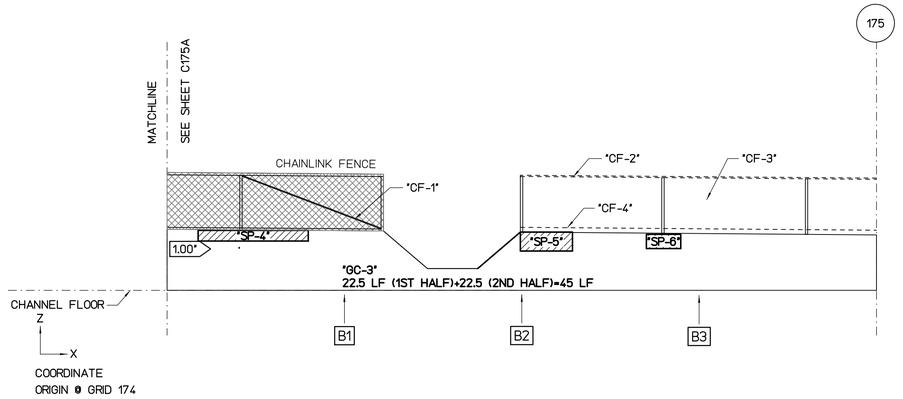


## WALL "B" FLATTEN VIEW

SCALE : 3/16" = 1'-0"

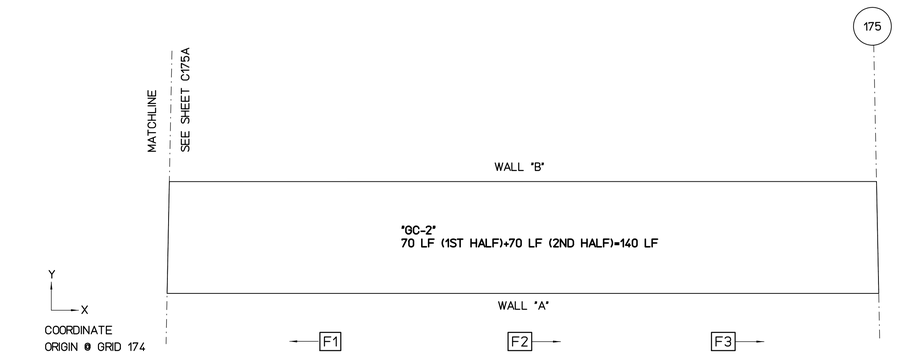


## FLOOR PLAN VIEW

SCALE : 3/16" = 1'-0"

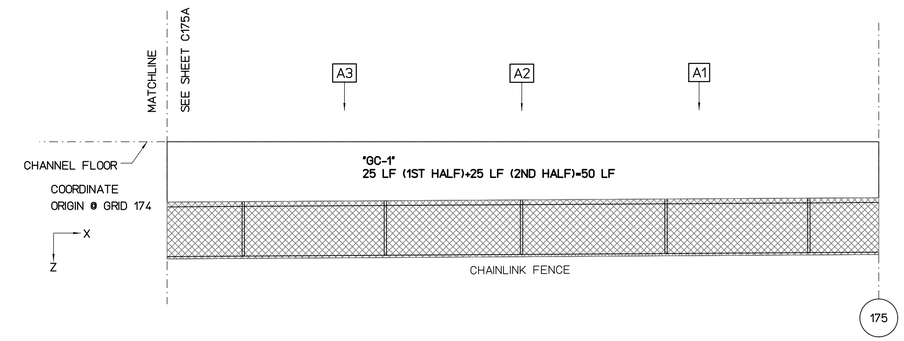


## WALL "A" FLATTEN VIEW

SCALE : 3/16" = 1'-0"

REPAIR LEGEND AND NOTES:

- 2 — CRACK AND SPALL REPAIR TYPES, SEE SHEETS SR201 AND SR202 FOR DETAILS. TYPE [*] INDICATES NO-REPAIR
- (A) — CHAINLINK FENCE REPAIR TYPES, SEE SHEETS SF201 AND SF202 FOR DETAILS
- 1.0 — TOP OF WALL LEANING DISTANCE TOWARD CHANNEL IN INCHES, SEE SHEETS SL101 TO SL207 FOR CONCRETE LINING

PHOTO LEGEND:

- A1 — WALL "A" ELEVATION PHOTO IDENTIFICATION SEE FLATTEN VIEW FOR PHOTO LOCATION
- B1 — WALL "B" ELEVATION PHOTO IDENTIFICATION SEE FLATTEN VIEW FOR PHOTO LOCATION
- F1 — CHANNEL FLOOR PHOTO IDENTIFICATION SEE FLOOR PLAN VIEW FOR PHOTO LOCATION

B1



B2



B3



F1



F2



F3



A1



A2



A3



### SPALL REPAIR CHART

| MARK | LOCATION | REPAIR TYPE | SPALL DIMENSION L | SPALL DIMENSION W | SPALL DIMENSION D | SPALL VOLUME | SPALL CENTER COORDINATE X | SPALL CENTER COORDINATE Y OR Z | RATING |
|---|---|---|---|---|---|---|---|---|---|
| "SP-1" | WALL "A" | [*] | 13 | 20 | 2 | 520 | 33 | 4 | 7 |
| "SP-2" | WALL "B" | [*] | 48 | 0.5 | 3 | 72 | 0.5 | 2.5 | 7 |
| "SP-3" | WALL "B" | [*] | 26 | 9 | 2 | 468 | 28 | 4 | 7 |
| "SP-4" | WALL "B" | [*] | 93 | 9 | 3 | 2511 | 56 | 4 | 7 |
| "SP-5" | WALL "B" | [*] | 44 | 16 | 2 | 1408 | 76 | 4 | 7 |
| "SP-6" | WALL "B" | [*] | 29 | 12 | 3 | 1044 | 84 | 4 | 7 |

### CHAINLINK FENCE REPAIR CHART

| MARK | LOCATION | REPAIR TYPE | POSTS | TOP RAIL | BOTTOM WIRE | BRACE | FABRIC |
|---|---|---|---|---|---|---|---|
| "CF-1" | WALL "B" | (B) | - | - | - | DAMAGED 1 | - |
| "CF-2" | WALL "B" | (C) | - | MISSING 25' | - | - | - |
| "CF-3" | WALL "B" | (E) | - | - | - | - | MISSING 25'x4' |
| "CF-4" | WALL "B" | (D) | - | - | MISSING 25' | - | - |

### CRACK REPAIR CHART

| MARK | LOCATION | REPAIR TYPE | GENERAL CRACKS (LF) | MAJOR CRACKS WIDTH (IN) | MAJOR CRACKS LENGTH (FT) | MAJOR CRACKS START PNT X | MAJOR CRACKS START PNT Y,Z | MAJOR CRACKS END PNT X | MAJOR CRACKS END PNT Y,Z | RATING |
|---|---|---|---|---|---|---|---|---|---|---|
| "GC-1" | WALL "A" | [*] | 50 | - | - | - | - | - | - | 8 |
| "GC-2" | FLOOR | [*] | 140 | - | - | - | - | - | - | 8 |
| "GC-3" | WALL "B" | [*] | 45 | - | - | - | - | - | - | 8 |

NOTES:

1- CONCRETE LINING IS PROVIDED IN THIS SEGMENT SEE SHEET SL207

2- THERE IS NO SPALL AND CRACK REPAIRS IN THIS SEGMENT

GRAPHIC SCALES:

0 1' 2' 4' 8' 12' 16'

3/16"=1'-0"

| REVISION NO. | DATE | REVISIONS | BY |
|---|---|---|---|

ATHER R. DAR
LICENSED PROFESSIONAL ENGINEER
No. 7808-S
HAWAII U.S.A.
Exp. Date: 4-30-20

THIS WORK WAS PREPARED BY ME OR UNDER MY SUPERVISION AND CONSTRUCTION OF THIS PROJECT WILL BE UNDER MY OBSERVATION

DEPARTMENT OF HAWAIIAN HOMELAND

# NANAKULI FLOOD CONTROL CHANNEL IMPROVEMENTS NANAKULI VALLEY, OAHU HAWAII

CHANNEL SEGMENT 175 REPAIR DETAILS - 2ND HALF

| | |
|---|---|
| DESIGNED BY: | TTP |
| DRAWN BY: | AK, AP, DL |
| CHECKED BY: | AD |
| SUPV: | |
| DATE: | 03/05/2019 |

HAWAII ENGINEERING GROUP, Inc.
Civil & Structural Engineers
1088 BISHOP STREET #2506
HONOLULU, HI 96813
Tel: 808-533-2092

JOB NO.

SHEET C175B

207 OF 225 SHTS

FILE ___ ___ DRAWER ___ ___ ___ FOLDER ___ ___

Plot date: 15-Apr-2020
Full Size Plot

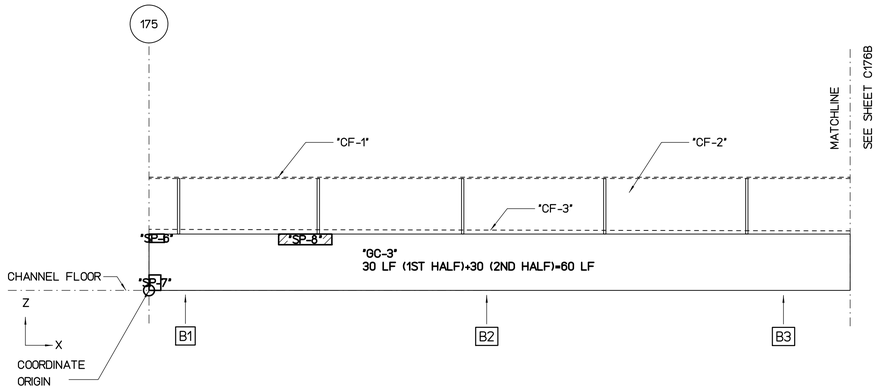


## WALL "B" FLATTEN VIEW

SCALE : 3/16" = 1'-0"

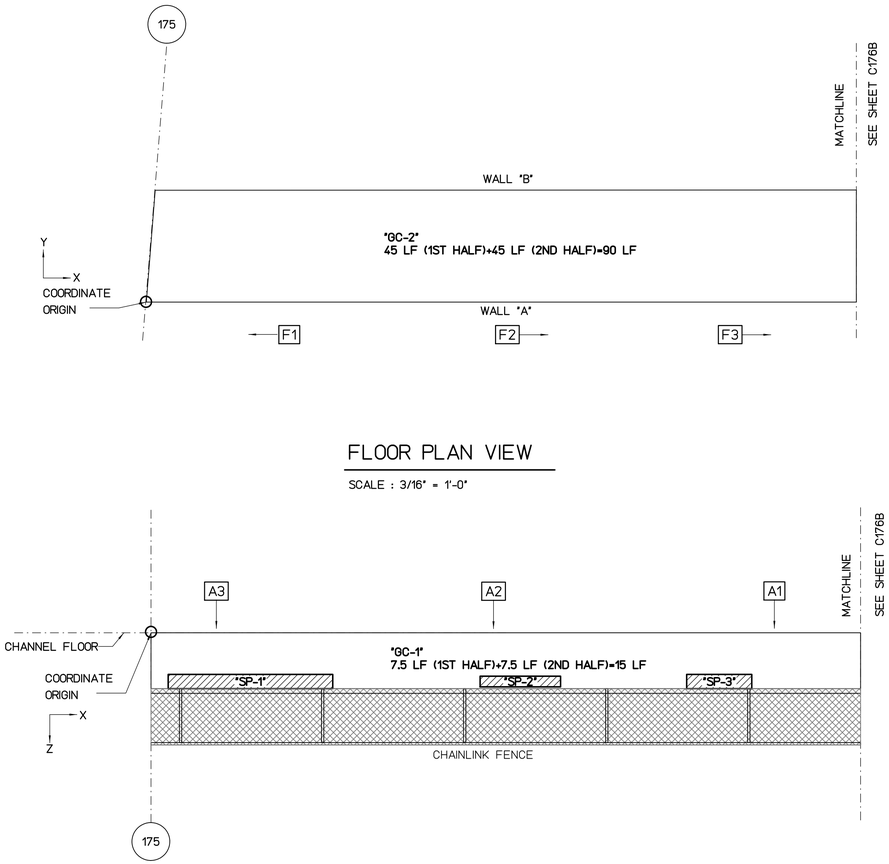


## FLOOR PLAN VIEW

SCALE : 3/16" = 1'-0"




## WALL "A" FLATTEN VIEW

SCALE : 3/16" = 1'-0"

REPAIR LEGEND AND NOTES:

- [2] CRACK AND SPALL REPAIR TYPES, SEE SHEETS SR201 AND SR202 FOR DETAILS. TYPE [*] INDICATES NO-REPAIR
- (A) CHAINLINK FENCE REPAIR TYPES, SEE SHEETS SF201 AND SF202 FOR DETAILS
- 1.0 TOP OF WALL LEANING DISTANCE TOWARD CHANNEL IN INCHES, SEE SHEETS SL101 TO SL207 FOR CONCRETE LINING

PHOTO LEGEND:

- A1 WALL "A" ELEVATION PHOTO IDENTIFICATION SEE FLATTEN VIEW FOR PHOTO LOCATION
- B1 WALL "B" ELEVATION PHOTO IDENTIFICATION SEE FLATTEN VIEW FOR PHOTO LOCATION
- F1 CHANNEL FLOOR PHOTO IDENTIFICATION SEE FLOOR PLAN VIEW FOR PHOTO LOCATION

B1



B2



B3



F1



F2



F3



A1



A2



A3



### SPALL REPAIR CHART

| MARK | LOCATION | REPAIR TYPE | SPALL DIMENSION L | SPALL DIMENSION W | SPALL DIMENSION D | SPALL VOLUME | SPALL CENTER COORDINATE X | SPALL CENTER COORDINATE Y OR Z | RATING |
|---|---|---|---|---|---|---|---|---|---|
| "SP-1" | WALL "A" | 3 | 139 | 12 | 2 | 3336 | 7 | 4 | 7 |
| "SP-2" | WALL "A" | 3 | 68 | 9 | 3 | 1836 | 26 | 4 | 7 |
| "SP-3" | WALL "A" | 3 | 55 | 12 | 2 | 1320 | 40 | 4 | 7 |
| "SP-4" | WALL "A" | 3 | 39 | 19 | 3 | 2223 | 52 | 4 | 7 |
| "SP-5" | FLOOR | 3 | 11 | 26 | 3 | 858 | 99.5 | 7 | 7 |
| "SP-6" | WALL "B" | 3 | 13 | 7 | 3 | 273 | 0.5 | 4 | 7 |
| "SP-7" | WALL "B" | 3 | 10 | 13 | 3 | 390 | 0.5 | 0.5 | 7 |
| "SP-8" | WALL "B" | 3 | 45 | 9 | 2 | 810 | 11 | 4 | 7 |

### CHAINLINK FENCE REPAIR CHART

| MARK | LOCATION | REPAIR TYPE | POSTS | TOP RAIL | BOTTOM WIRE | BRACE | FABRIC |
|---|---|---|---|---|---|---|---|
| "CF-1" | WALL "B" | (C) | - | MISSING 50' | - | - | - |
| "CF-2" | WALL "B" | (E) | - | - | - | - | MISSING 50'x4' |
| "CF-3" | WALL "B" | (D) | - | - | MISSING 50' | - | - |
| | | | | | | | |
| | | | | | | | |
| | | | | | | | |
| | | | | | | | |
| | | | | | | | |
| | | | | | | | |

### CRACK REPAIR CHART

| MARK | LOCATION | REPAIR TYPE | GENERAL CRACKS (LF) | MAJOR CRACKS WIDTH (IN) | MAJOR CRACKS LENGTH (FT) | MAJOR CRACKS START PNT X | MAJOR CRACKS START PNT Y,Z | MAJOR CRACKS END PNT X | MAJOR CRACKS END PNT Y,Z | RATING |
|---|---|---|---|---|---|---|---|---|---|---|
| "GC-1" | WALL "A" | * | 15 | - | - | - | - | - | - | 8 |
| "GC-2" | FLOOR | * | 90 | - | - | - | - | - | - | 8 |
| "GC-3" | WALL "B" | * | 60 | - | - | - | - | - | - | 8 |
| | | | | | | | | | | |
| | | | | | | | | | | |
| | | | | | | | | | | |
| | | | | | | | | | | |

GRAPHIC SCALES:

0 1' 2' 4' 8' 12' 16'

3/16"=1'-0"

| REVISION NO. | DATE | REVISIONS | BY |
|---|---|---|---|

ATHER R. DAR
LICENSED PROFESSIONAL ENGINEER
No. 7808-S
HAWAII U.S.A.

Exp. Date: 4-30-20

THIS WORK WAS PREPARED BY ME OR UNDER MY SUPERVISION AND CONSTRUCTION OF THIS PROJECT WILL BE UNDER MY OBSERVATION

DEPARTMENT OF HAWAIIAN HOMELAND

# NANAKULI FLOOD CONTROL CHANNEL IMPROVEMENTS NANAKULI VALLEY, OAHU HAWAII

CHANNEL SEGMENT 176 REPAIR DETAILS - 1ST HALF

| | |
|---|---|
| DESIGNED BY: | TTP |
| DRAWN BY: | AK, AP, DL |
| CHECKED BY: | AD |
| SUPV: | |
| DATE: | 03/05/2019 |

HAWAII ENGINEERING GROUP, Inc.
Civil & Structural Engineers
1088 BISHOP STREET #2506
HONOLULU, HI 96813
Tel: 808-533-2092

JOB NO.

SHEET C176A

208 OF 225 SHTS

FILE ___ DRAWER ___ ___ FOLDER ___ ___

Plot date: 15-Apr-2020
Full Size Plot

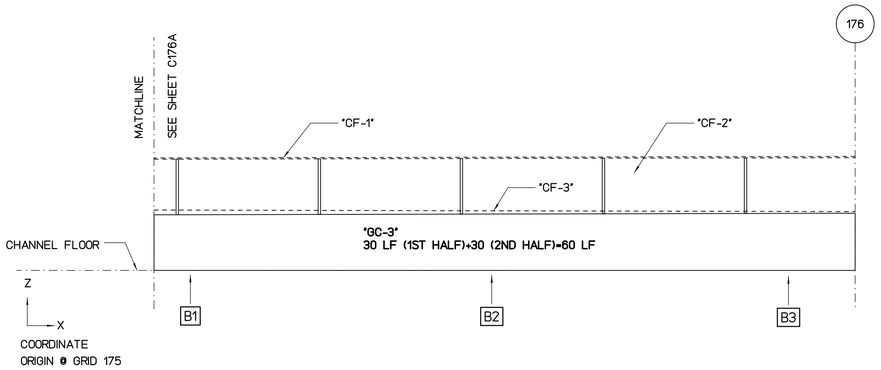


## WALL "B" FLATTEN VIEW

SCALE : 3/16" = 1'-0"

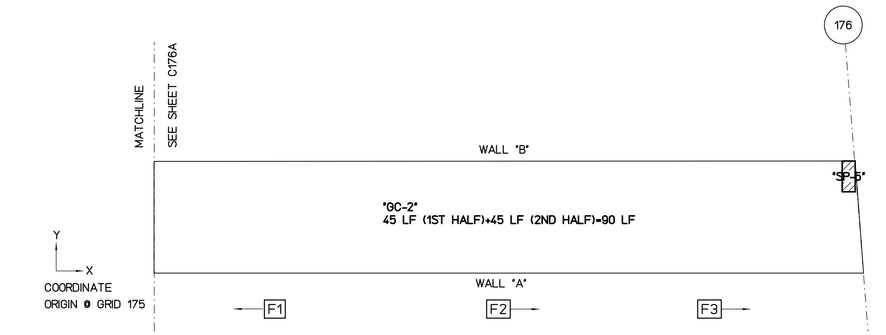


## FLOOR PLAN VIEW

SCALE : 3/16" = 1'-0"

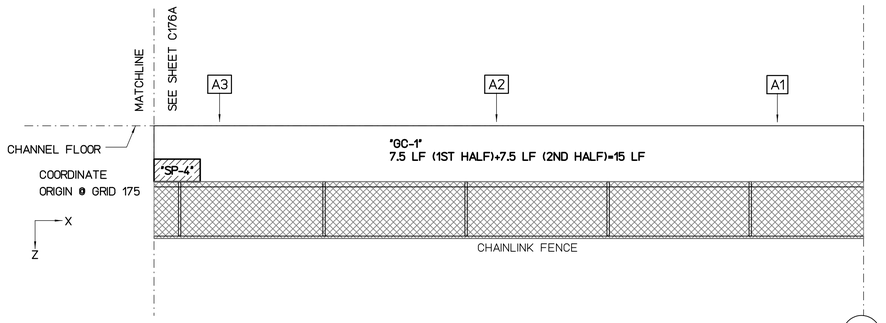


## WALL "A" FLATTEN VIEW

SCALE : 3/16" = 1'-0"

REPAIR LEGEND AND NOTES:

- 2 — CRACK AND SPALL REPAIR TYPES, SEE SHEETS SR201 AND SR202 FOR DETAILS. TYPE [*] INDICATES NO-REPAIR
- (A) — CHAINLINK FENCE REPAIR TYPES, SEE SHEETS SF201 AND SF202 FOR DETAILS
- 1.0 — TOP OF WALL LEANING DISTANCE TOWARD CHANNEL IN INCHES, SEE SHEETS SL101 TO SL207 FOR CONCRETE LINING

PHOTO LEGEND:

- A1 — WALL "A" ELEVATION PHOTO IDENTIFICATION SEE FLATTEN VIEW FOR PHOTO LOCATION
- B1 — WALL "B" ELEVATION PHOTO IDENTIFICATION SEE FLATTEN VIEW FOR PHOTO LOCATION
- F1 — CHANNEL FLOOR PHOTO IDENTIFICATION SEE FLOOR PLAN VIEW FOR PHOTO LOCATION

B1



B2



B3



F1



F2



F3



A1



A2



A3



### SPALL REPAIR CHART

| MARK | LOCATION | REPAIR TYPE | SPALL DIMENSION L | SPALL DIMENSION W | SPALL DIMENSION D | SPALL VOLUME | SPALL CENTER COORDINATE X | SPALL CENTER COORDINATE Y OR Z | RATING |
|---|---|---|---|---|---|---|---|---|---|
| "SP-1" | WALL "A" | 3 | 139 | 12 | 2 | 3336 | 7 | 4 | 7 |
| "SP-2" | WALL "A" | 3 | 68 | 9 | 3 | 1836 | 26 | 4 | 7 |
| "SP-3" | WALL "A" | 3 | 55 | 12 | 2 | 1320 | 40 | 4 | 7 |
| "SP-4" | WALL "A" | 3 | 39 | 19 | 3 | 2223 | 52 | 4 | 7 |
| "SP-5" | FLOOR | 3 | 11 | 26 | 3 | 858 | 99.5 | 7 | 7 |
| "SP-6" | WALL "B" | 3 | 13 | 7 | 3 | 273 | 0.5 | 4 | 7 |
| "SP-7" | WALL "B" | 3 | 10 | 13 | 3 | 390 | 0.5 | 0.5 | 7 |
| "SP-8" | WALL "B" | 3 | 45 | 9 | 2 | 810 | 11 | 4 | 7 |

### CHAINLINK FENCE REPAIR CHART

| MARK | LOCATION | REPAIR TYPE | POSTS | TOP RAIL | BOTTOM WIRE | BRACE | FABRIC |
|---|---|---|---|---|---|---|---|
| "CF-1" | WALL "B" | (C) | - | MISSING 50' | - | - | - |
| "CF-2" | WALL "B" | (E) | - | - | - | - | MISSING 50'x4' |
| "CF-3" | WALL "B" | (D) | - | - | MISSING 50' | - | - |
| | | | | | | | |
| | | | | | | | |
| | | | | | | | |
| | | | | | | | |
| | | | | | | | |
| | | | | | | | |

### CRACK REPAIR CHART

| MARK | LOCATION | REPAIR TYPE | GENERAL CRACKS (LF) | MAJOR CRACKS WIDTH (IN) | MAJOR CRACKS LENGTH (FT) | MAJOR CRACKS START PNT X | MAJOR CRACKS START PNT Y,Z | MAJOR CRACKS END PNT X | MAJOR CRACKS END PNT Y,Z | RATING |
|---|---|---|---|---|---|---|---|---|---|---|
| "GC-1" | WALL "A" | * | 15 | - | - | - | - | - | - | 8 |
| "GC-2" | FLOOR | * | 90 | - | - | - | - | - | - | 8 |
| "GC-3" | WALL "B" | * | 60 | - | - | - | - | - | - | 8 |
| | | | | | | | | | | |
| | | | | | | | | | | |
| | | | | | | | | | | |
| | | | | | | | | | | |

GRAPHIC SCALES:

0 1' 2' 4' 8' 12' 16'

3/16"=1'-0"

| REVISION NO. | DATE | REVISIONS | BY |
|---|---|---|---|

ATHER R. DAR
LICENSED PROFESSIONAL ENGINEER
No. 7808-S
HAWAII U.S.A.
Exp. Date: 4-30-20

THIS WORK WAS PREPARED BY ME OR UNDER MY SUPERVISION AND CONSTRUCTION OF THIS PROJECT WILL BE UNDER MY OBSERVATION

DEPARTMENT OF HAWAIIAN HOMELAND

# NANAKULI FLOOD CONTROL CHANNEL IMPROVEMENTS NANAKULI VALLEY, OAHU HAWAII

CHANNEL SEGMENT 176 REPAIR DETAILS - 2ND HALF

| | |
|---|---|
| DESIGNED BY: | TTP |
| DRAWN BY: | AK, AP, DL |
| CHECKED BY: | AD |
| SUPV: | |
| DATE: | 03/05/2019 |

HAWAII ENGINEERING GROUP, Inc.
Civil & Structural Engineers
1088 BISHOP STREET #2506
HONOLULU, HI 96813
Tel: 808-533-2092

JOB NO.

SHEET C176B

209 OF 225 SHTS

FILE ___ DRAWER ___ ___ FOLDER ___ ___

Plot date: 15-Apr-2020
Full Size Plot

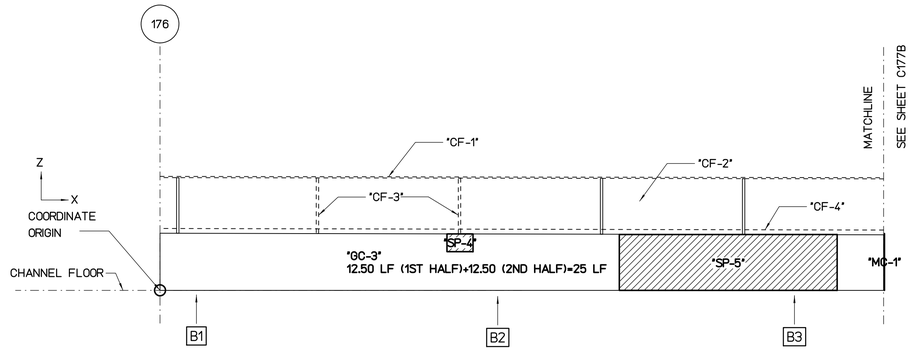


## WALL "B" FLATTEN VIEW

SCALE : 3/16" = 1'-0"

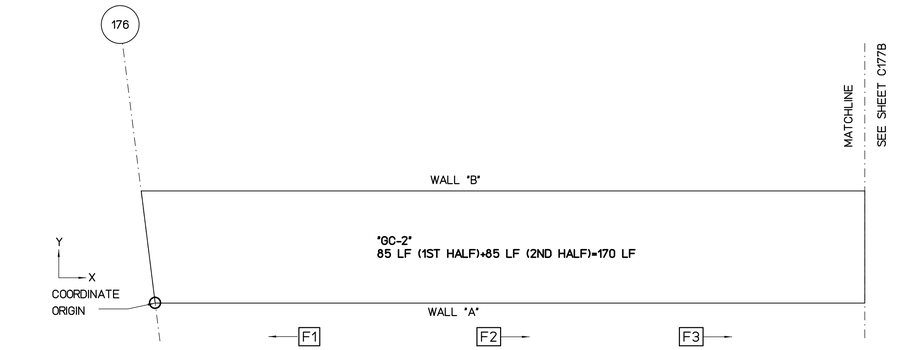


## FLOOR PLAN VIEW

SCALE : 3/16" = 1'-0"

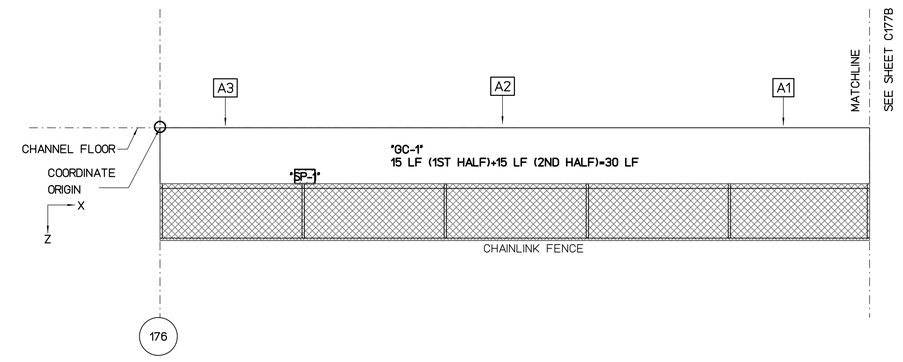


## WALL "A" FLATTEN VIEW

SCALE : 3/16" = 1'-0"

REPAIR LEGEND AND NOTES:

- 2 — CRACK AND SPALL REPAIR TYPES, SEE SHEETS SR201 AND SR202 FOR DETAILS. TYPE [*] INDICATES NO-REPAIR
- (A) — CHAINLINK FENCE REPAIR TYPES, SEE SHEETS SF201 AND SF202 FOR DETAILS
- 1.0 — TOP OF WALL LEANING DISTANCE TOWARD CHANNEL IN INCHES, SEE SHEETS SL101 TO SL207 FOR CONCRETE LINING

PHOTO LEGEND:

- A1 — WALL "A" ELEVATION PHOTO IDENTIFICATION SEE FLATTEN VIEW FOR PHOTO LOCATION
- B1 — WALL "B" ELEVATION PHOTO IDENTIFICATION SEE FLATTEN VIEW FOR PHOTO LOCATION
- F1 — CHANNEL FLOOR PHOTO IDENTIFICATION SEE FLOOR PLAN VIEW FOR PHOTO LOCATION

B1



B2



B3



F1



F2



F3



A1



A2



A3



### SPALL REPAIR CHART

| MARK | LOCATION | REPAIR TYPE | SPALL DIMENSION L | SPALL DIMENSION W | SPALL DIMENSION D | SPALL VOLUME | SPALL CENTER COORDINATE X | SPALL CENTER COORDINATE Y OR Z | RATING |
|---|---|---|---|---|---|---|---|---|---|
| "SP-1" | WALL "A" | 3 | 17 | 12 | 2 | 408 | 11 | 3.5 | 7 |
| "SP-2" | WALL "A" | 3 | 36 | 12 | 2 | 864 | 52 | 3 | 7 |
| "SP-3" | WALL "A" | 3 | 48 | 12 | 3 | 1728 | 90 | 3 | 7 |
| "SP-4" | WALL "B" | 3 | 22 | 15 | 4 | 1320 | 23 | 3.3 | 6 |
| "SP-5" | WALL "B" | 3 | 184 | 47 | 6 | 52992 | 40 | 1.9 | 6 |
| "SP-6" | WALL "B" | 3 | 60 | 15 | 8 | 7200 | 54 | 3.5 | 6 |
| "SP-7" | WALL "B" | 3 | 48 | 31 | 8 | 11904 | 63 | 2.5 | 6 |
| "SP-8" | WALL "B" | 3 | 24 | 28 | 8 | 5376 | 72 | 3 | 6 |
| "SP-9" | WALL "B" | 3 | 12 | 36 | 3 | 1296 | 100 | 3 | 7 |

### CHAINLINK FENCE REPAIR CHART

| MARK | LOCATION | REPAIR TYPE | POSTS | TOP RAIL | BOTTOM WIRE | BRACE | FABRIC |
|---|---|---|---|---|---|---|---|
| "CF-1" | WALL "B" | (C) | - | MISSING 50' | - | - | - |
| "CF-2" | WALL "B" | (E) | - | - | - | - | MISSING 50'x4' |
| "CF-3" | WALL "B" | (A) | MISSING 2 | - | - | - | - |
| "CF-4" | WALL "B" | (D) | - | - | MISSING 50' | - | - |

### CRACK REPAIR CHART

| MARK | LOCATION | REPAIR TYPE | GENERAL CRACKS (LF) | MAJOR CRACKS WIDTH (IN) | MAJOR CRACKS LENGTH (FT) | MAJOR CRACKS START PNT X | MAJOR CRACKS START PNT Y,Z | MAJOR CRACKS END PNT X | MAJOR CRACKS END PNT Y,Z | RATING |
|---|---|---|---|---|---|---|---|---|---|---|
| "MC-1" | WALL "B" | 1 | - | 0.19 | 4.5 | 51 | 0 | 51 | 4 | 7 |
| "GC-1" | WALL "A" | * | 30 | - | - | - | - | - | - | 8 |
| "GC-2" | FLOOR | * | 170 | - | - | - | - | - | - | 8 |
| "GC-3" | WALL "B" | * | 25 | - | - | - | - | - | - | 8 |

GRAPHIC SCALES:

0 1' 2' 4' 8' 12' 16'

3/16"=1'-0"

| REVISION NO. | DATE | REVISIONS | BY |
|---|---|---|---|

ATHER R. DAR
LICENSED PROFESSIONAL ENGINEER
No. 7808-S
HAWAII U.S.A.
Exp. Date: 4-30-20

THIS WORK WAS PREPARED BY ME OR UNDER MY SUPERVISION AND CONSTRUCTION OF THIS PROJECT WILL BE UNDER MY OBSERVATION

DEPARTMENT OF HAWAIIAN HOMELAND

# NANAKULI FLOOD CONTROL CHANNEL IMPROVEMENTS NANAKULI VALLEY, OAHU HAWAII

CHANNEL SEGMENT 177 REPAIR DETAILS - 1ST HALF

| | |
|---|---|
| DESIGNED BY: | TTP |
| DRAWN BY: | AK, AP, DL |
| CHECKED BY: | AD |
| SUPV: | |
| DATE: | 03/05/2019 |

HAWAII ENGINEERING GROUP, Inc.
Civil & Structural Engineers
1088 BISHOP STREET #2506
HONOLULU, HI 96813
Tel: 808-533-2092

JOB NO.

SHEET C177A
210OF 225 SHTS

FILE ___ DRAWER ___ ___ FOLDER ___ ___

Plot date: 15-Apr-2020
Full Size Plot

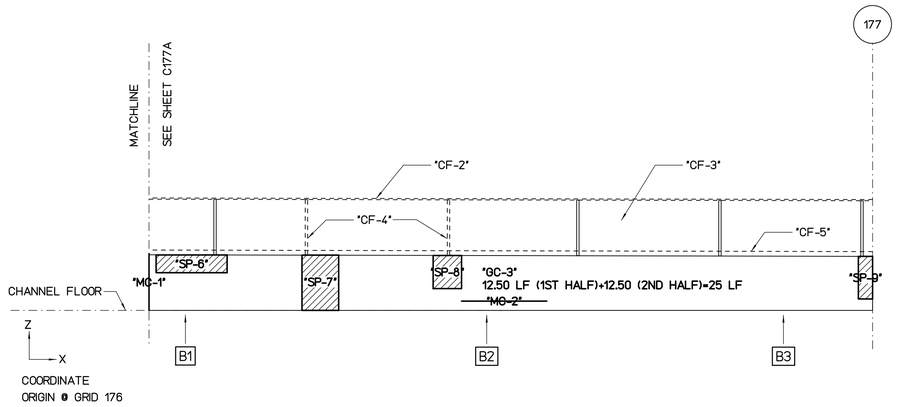


## WALL "B" FLATTEN VIEW

SCALE : 3/16" = 1'-0"

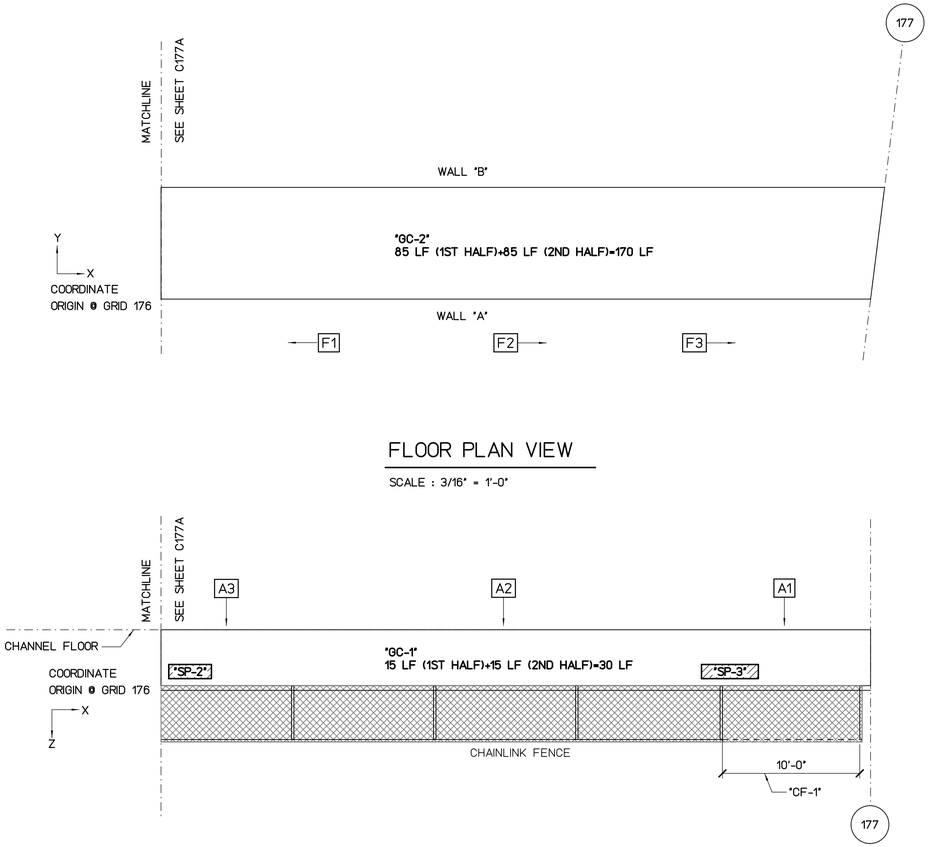


## FLOOR PLAN VIEW

SCALE : 3/16" = 1'-0"

## WALL "A" FLATTEN VIEW

SCALE : 3/16" = 1'-0"

REPAIR LEGEND AND NOTES:

- [2] CRACK AND SPALL REPAIR TYPES, SEE SHEETS SR201 AND SR202 FOR DETAILS. TYPE [*] INDICATES NO-REPAIR
- (A) CHAINLINK FENCE REPAIR TYPES, SEE SHEETS SF201 AND SF202 FOR DETAILS
- 1.0> TOP OF WALL LEANING DISTANCE TOWARD CHANNEL IN INCHES, SEE SHEETS SL101 TO SL207 FOR CONCRETE LINING

PHOTO LEGEND:

- A1 WALL "A" ELEVATION PHOTO IDENTIFICATION SEE FLATTEN VIEW FOR PHOTO LOCATION
- B1 WALL "B" ELEVATION PHOTO IDENTIFICATION SEE FLATTEN VIEW FOR PHOTO LOCATION
- F1 CHANNEL FLOOR PHOTO IDENTIFICATION SEE FLOOR PLAN VIEW FOR PHOTO LOCATION

B1



B2



B3



F1



F2



F3



A1



A2



A3



### SPALL REPAIR CHART

| MARK | LOCATION | REPAIR TYPE | SPALL DIMENSION L | W | D | SPALL VOLUME | SPALL CENTER COORDINATE X | Y OR Z | RATING |
|---|---|---|---|---|---|---|---|---|---|
| "SP-1" | WALL "A" | 3 | 17 | 12 | 2 | 408 | 11 | 3.5 | 7 |
| "SP-2" | WALL "A" | 3 | 36 | 12 | 2 | 864 | 52 | 3 | 7 |
| "SP-3" | WALL "A" | 3 | 48 | 12 | 3 | 1728 | 90 | 3 | 7 |
| "SP-4" | WALL "B" | 3 | 22 | 15 | 4 | 1320 | 23 | 3.3 | 6 |
| "SP-5" | WALL "B" | 3 | 184 | 47 | 6 | 52992 | 40 | 1.9 | 6 |
| "SP-6" | WALL "B" | 3 | 60 | 15 | 8 | 7200 | 54 | 3.5 | 6 |
| "SP-7" | WALL "B" | 3 | 48 | 31 | 8 | 11904 | 63 | 2.5 | 6 |
| "SP-8" | WALL "B" | 3 | 24 | 28 | 8 | 5376 | 72 | 3 | 6 |
| "SP-9" | WALL "B" | 3 | 12 | 36 | 3 | 1296 | 100 | 3 | 7 |

### CHAINLINK FENCE REPAIR CHART

| MARK | LOCATION | REPAIR TYPE | POSTS | TOP RAIL | BOTTOM WIRE | BRACE | FABRIC |
|---|---|---|---|---|---|---|---|
| "CF-1" | WALL "A" | (C) | - | MISSING 10' | - | - | - |
| "CF-2" | WALL "B" | (C) | - | MISSING 50' | - | - | - |
| "CF-3" | WALL "B" | (E) | - | - | - | - | MISSING 50'x4' |
| "CF-4" | WALL "B" | (A) | MISSING 2 | - | - | - | - |
| "CF-5" | WALL "B" | (D) | - | - | MISSING 50' | - | - |

### CRACK REPAIR CHART

| MARK | LOCATION | REPAIR TYPE | GENERAL CRACKS (LF) | MAJOR CRACKS WIDTH (IN) | LENGTH (FT) | START PNT X | START PNT Y,Z | END PNT X | END PNT Y,Z | RATING |
|---|---|---|---|---|---|---|---|---|---|---|
| "MC-1" | WALL "B" | 1 | - | 0.19 | 4.5 | 51 | 0 | 51 | 4 | 7 |
| "MC-2" | WALL "B" | 1 | - | 0.19 | 7 | 73 | 0.67 | 79 | 0.67 | 7 |
| "GC-1" | WALL "A" | * | 30 | - | - | - | - | - | - | 8 |
| "GC-2" | FLOOR | * | 170 | - | - | - | - | - | - | 8 |
| "GC-3" | WALL "B" | * | 25 | - | - | - | - | - | - | 8 |

GRAPHIC SCALES:

0 1' 2' 4' 8' 12' 16'

3/16"=1'-0"

| REVISION NO. | DATE | REVISIONS | BY |
|---|---|---|---|

ARTHER R. DAR
LICENSED PROFESSIONAL ENGINEER
No. 7808-S
HAWAII U.S.A.
Exp. Date: 4-30-20

THIS WORK WAS PREPARED BY ME OR UNDER MY SUPERVISION AND CONSTRUCTION OF THIS PROJECT WILL BE UNDER MY OBSERVATION

DEPARTMENT OF HAWAIIAN HOMELAND

# NANAKULI FLOOD CONTROL CHANNEL IMPROVEMENTS NANAKULI VALLEY, OAHU HAWAII

CHANNEL SEGMENT 177 REPAIR DETAILS - 2ND HALF

| | |
|---|---|
| DESIGNED BY: | TTP |
| DRAWN BY: | AK, AP, DL |
| CHECKED BY: | AD |
| SUPV: | |
| DATE: | 03/05/2019 |

HAWAII ENGINEERING GROUP, Inc.
Civil & Structural Engineers
1088 BISHOP STREET #2506
HONOLULU, HI 96813
Tel: 808-533-2092

JOB NO.

SHEET C177B
211 OF 225 SHTS

FILE ___ ___ DRAWER ___ ___ ___ FOLDER ___ ___

Plot date: 15-Apr-2020
Full Size Plot

# GENERAL NOTES

GENERAL:

1. ALL WORK SHALL CONFORM TO THE 2006 INTERNATIONAL BUILDING CODE (IBC) WITH THE CITY AND COUNTY OF HONOLULU AMENDMENTS.
2. THE CONTRACTOR SHALL VERIFY ALL DIMENSIONS AND CONDITIONS PRIOR TO THE START OF THE JOB AND NOTIFY ALL DISCREPANCIES TO THE ARCHITECT
3. ALL WORK SHALL CONFORM TO THE BEST PRACTICE PREVAILING IN THE VARIOUS TRADES COMPRISING THE WORK.
4. FEATURES OF CONSTRUCTION SHOWN ARE TYPICAL, AND THEY SHALL APPLY GENERALLY THROUGHOUT FOR SIMILAR CONDITIONS. MODIFY TYPICAL DETAILS AS DIRECTED TO MEET SPECIAL CONDITIONS.
5. SPECIFIC NOTES AND DETAILS SHALL TAKE PRECEDENCE OVER GENERAL NOTES AND TYPICAL DETAILS.
6. THE CONTRACTOR SHALL REFER TO THE SPECIFICATIONS FOR INFORMATION NOT COVERED BY THESE GENERAL NOTES OR THE STRUCTURAL DRAWINGS.
7. THE CONTRACTOR SHALL REFER TO THE ARCHITECTURAL, ELECTRICAL AND MECHANICAL DRAWINGS FOR CONDITIONS, DEPRESSIONS, OPENINGS, ITEMS TO BE EMBEDDED OR ATTACHED TO STRUCTURAL ELEMENTS, ETC., NOT SHOWN ON THE STRUCTURAL DRAWINGS.
8. THE CONTRACTOR SHALL BE RESPONSIBLE FOR ALL SHORING. THE CONTRACTOR SHALL PROVIDE TEMPORARY ERECTION BRACING AND SHORING FOR ALL STRUCTURAL MEMBERS AS REQUIRED FOR STRUCTURAL STABILITY OF THE STRUCTURE DURING ALL PHASES OF CONSTRUCTION. THE CONTRACTOR SHALL ALSO BE RESPONSIBLE FOR MEANS AND METHODS OF CONSTRUCTION INCLUDING BUT NOT LIMITED TO SAFETY MEASURES TO PROTECT THE STRUCTURE, WORKMEN OR OTHER PERSONS DURING CONSTRUCTION. OBSERVATION VISITS BY THE ARCHITECT OR HIS REPRESENTATIVE SHALL NOT INCLUDE INSPECTION OF THE CONTRACTOR'S SAFETY MEASURES.
9. THE CONTRACTOR SHALL TAKE ALL STEPS NECESSARY TO INSURE THE PROPER ALIGNMENT OF THE STRUCTURES.
10. MODIFICATION TO DRAWINGS: THE GENERAL CONTRACTOR AND HIS SUBCONTRACTORS MUST SUBMIT IN WRITING ANY REQUESTS FOR MODIFICATIONS TO THE PLANS AND SPECIFICATIONS. SHOP DRAWINGS THAT ARE SUBMITTED TO THE ENGINNER FOR HIS REVIEW DO NOT CONSTITUTE "IN WRITING". IN ANY EVENT, CHANGES TO THE PLANS AND SPECIFICATIONS BY MEANS OF SHOP DRAWINGS BECOME THE RESPONSIBILITY OF THE PERSON INITIATING SUCH CHANGES.
11. THE CONTRACTOR SHALL PROTECT AND SHIELD FROM DAMAGE ALL AREAS ADJACENT TO AND SURROUNDING THE CONSTRUCTION WORK. EXISTING CONDITIONS OR AREAS DAMAGED OR DISTURBED BY THE CONTRACTOR'S OPERATIONS SHALL BE RESTORED TO THEIR ORIGINAL CONDITION.

DESIGN DATA:

1. SOIL PROPERTIES USING IN RETAINING WALL DESIGN
   - A. ACTIVE PRESSURE EQUVALENT . . . . . 35 PCF
   - B. PASSIVE PRESSURE EQUVALENT . . . . . 300 PCF
   - C. COEFFICIENT OF FRICTION . . . . . 0.4
   - D. SOIL DENSITY . . . . . 110 PCF
2. SOIL BEARING PRESSURE . . . . . 600 PSF

EPOXY GROUTING

1. EPOXY GROUTING OF REBARS: EPOXY SHALL BE SIKA EPOXY INJECTION GEL SYSTEM OR APPROVED EQUAL. SUBMIT ICC-ES EVALUATION REPORT AND TECHNICAL DATA FOR ALL EPOXY PRODUCTS. HOLE SIZE FOR REBAR GROUTING SHALL BE 1/8" LARGER THAN REBAR DIAMETER. JUST PRIOR TO GROUTING, EACH HOLE SHALL BE SCRAPED AND NYLON BRUSHED, AND THEN, SHALL BE BLOWN OUT USING OIL FREE COMPRESSED AIR TO REMOVE ANY RESIDUE. GROUTING PREPARATION AND APPLICATION SHALL STRICTLY CONFORM TO THE EPOXY MANUFACTURER'S INSTRUCTIONS AND RECOMMENDATIONS.
2. PROTECT CONCRETE SURFACES BEYOND THE LIMITS OF THE SURFACE RECEIVING THE EPOXY GROUT AGAINST SPILLAGE. IMMEDIATELY REMOVE ANY EPOXY COMPOUND, APPLIED OR SPILLED, BEYOND THE DESIRED AREAS. PERFORM CLEAN UP WITH MATERIALS AS RECOMMENDED BY THE EPOXY MANUFACTURER.

CONCRETE:

1. ALL WORK SHALL CONFORM TO ACI-318-11.
2. VERIFY LOCATIONS AND DIMENSIONS OF SLOTS, ANCHORS, DUCTS, ETC., RELATING TO MECHANICAL, ELECTRICAL WORK BEFORE POURING CONCRETE.
3. ALL INSERTS, ANCHOR BOLTS, PLATES, ETC. EMBEDDED IN CONCRETE SHALL BE HOT-DIPPED GALVANIZED UNLESS NOTED OTHERWISE.
4. THE 28-DAY COMPRESSIVE STRENGTH OF CONCRETE SHALL BE MIN. 4,000 PSI (MAXIMUM W/C = 0.42) AND THE MAXIMUM AGGREGATE SIZE SHALL BE 3/4". CONCRETE SLUMP SHALL BE 4.5". USE HIGH RANGE WATER REDUCERS (SUPERPLASTICIZERS) AS REQUIRED TO INCREASE WORKABILITY. SUBMIT CONCRETE MIX DESIGNS TO OFFICER-IN-CHARGE FOR REVIEW 14 DAYS PRIOR TO CONCRETE POUR.
5. FOR WALKS AND SLABS ON GRADE THE CONCRETE SHALL BE DESIGNED SUCH THAT THE WATER-CEMENT RATIO DOES NOT EXCEED 0.50 BY WEIGHT. FOR CONCRETE FILL ON SUSPENDED SLABS, THE WATER-CEMENT RATIO SHALL NOT EXCEED 0.45 BY WEIGHT.
6. ALL CONCRETE SHALL BE THOROUGHLY CONSOLIDATED DURING PLACEMENT USING A MECHANICAL VIBRATOR. ALL CONCRETE SHALL BE CURED FOR A PERIOD OF NOT LESS THAN 7 DAYS.
7. UNLESS OTHERWISE NOTED, MINIMUM REINFORCEMENT FOR CONCRETE SLAB SHALL BE #4 @ 18" ON CENTERS, EACH WAY, AT MID-DEPTH.
8. UNLESS OTHERWISE INDICATED, CHAMFER EXPOSED CORNERS 3/4" x 3/4". VERIFY WITH ARCHITECTURAL DRAWINGS.
9. NOTIFY ARCHITECT THREE (3) WORKING DAYS PRIOR TO ANY CONCRETE POUR. NO CONCRETE SHALL BE POURED PRIOR TO OBSERVATION BY THE ARCHITECT OR HIS REPRESENTATIVE.

REINFORCING STEEL:

1. ALL REINFORCING STEEL FOR NORMAL USE (NOT TO BE WELDED) SHALL BE HIGH STRENGTH DEFORMED BARS CONFORMING TO ASTM A 615, GRADE 60. REINFORCING STEEL TO BE WELDED SHALL CONFORM TO ASTM A 706, GRADE 60.
2. PLAIN STEEL WELDED PLAIN WIRE FABRIC SHALL CONFORM TO ASTM A 185, FABRICATED FROM AS-DRAWN STEEL WIRE INTO FLAT SHEETS AND GALVANIZED.
3. CONCRETE COVERAGE FOR REINFORCING BARS SHALL BE AS FOLLOWS, UNLESS OTHERWISE NOTED:
   - CONCRETE CAST AGAINST EARTH . . . . . 3"
   - CONCRETE EXPOSED TO EARTH OR WEATHER
     - MAIN REINF FOR COLUMNS & BEAMS. . . . . 2-1/2"
     - COLUMN TIES & BEAMS STIRRUPS . . . . . 2"
     - CAST IN PLACE SLABS & WALLS (EXPOSED FACES) . . 2"
   - CONCRETE NOT EXPOSED TO WEATHER
     - SLABS, WALLS . . . . . 3/4"
     - COLUMN TIES & BEAM STIRRUPS . . . . . 1-1/2"
4. BAR LAPS SHALL BE MADE AWAY FROM POINTS OF MAXIMUM STRESS AND UNLESS NOTED OTHERWISE, SPLICES, LAPS, DOWEL EXTENSIONS AND EMBEDMENTS SHALL BE 48 BAR DIAMETERS BUT NOT LESS THAN 24 INCHES. SPLICES SHALL BE STAGGERED WHERE POSSIBLE.
5. BENDS NOT DIMENSIONED SHALL BE STANDARD HOOKS.
6. WELDED WIRE FABRIC LAP SHALL BE 12 INCHES MINIMUM.
7. BOLSTER AND SUPPORT BARS FOR SLAB AND TOPPING REINFORCEMENT (INCLUDING SLABS ON GRADE) SHALL BE A MINIMUM OF #4 @ 24" O.C.
8. BEFORE PLACING OF CONCRETE, GENERAL CONTRACTOR SHALL INSPECT REINFORCEMENT PLACEMENT TO INSURE CONFORMANCE WITH THE DRAWINGS. ALL DISCREPANCIES SHALL BE CORRECTED PRIOR TO CONCRETE POUR OR GROUTING.
9. BARS NOTED "CONT" SHALL BE CONTINUOUS AND SHALL HAVE A MINIMUM LAP SPLICE LENGTH OF 48 BAR DIAMETERS BUT NOT LESS THAN 24 INCHES.

SPECIAL INSPECTION

1. SPECIAL INSPECTION PER 2006 INTERNATIONAL BUILDING CODE (IBC) ARE REQUIRED FOR THE FOLLOWING TYPES OF WORK:

   A. CONCRETE CONSTRUCTION: IBC TABLE 1704.4
   CONCRETE PLACEMENT: CONTINUOUS INSPECTION
   FRESH CONCRETE SAMPLING: CONTINUOUS
   REINFORCING STEEL: PERIODIC
   BOLTS INSTALLED IN CONCRETE: CONTINUOUS INSPECTION
   OTHER ITEMS: PERIODIC

2. THE CONTRACTOR SHALL NOTIFY THE SPECIAL INSPECTOR AT LEAST THREE (3) WORKING DAYS PRIOR TO PERFORMING WORK REQUIRING SPECIAL INSPECTIONS. WORK PERFORMED WITHOUT REQUIRED SPECIAL INSPECTION WILL BE SUBJECT TO REJECTION.

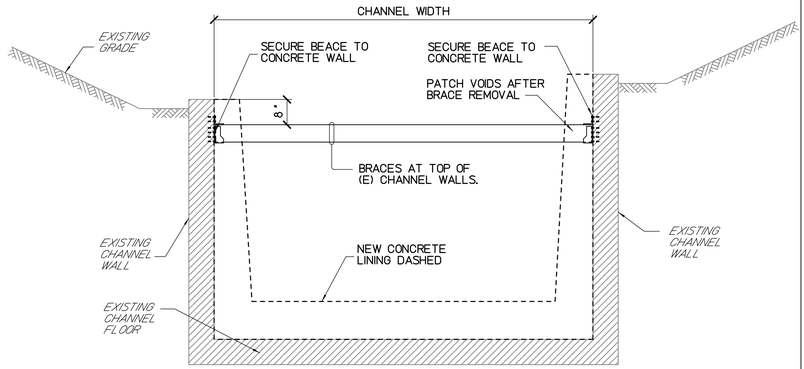


NOTES:

1. CONTRACTOR SHALL PROVIDE BRACES AT TOP OF (E) CHANNEL WALLS PRIOR TO LINING CONSTRUCTION
2. REMOVE BRACES ONLY AFTER LINING CONCRETE REACHES ITS DESIGN STRENGTH.
3. BRACES SHALL BE PLACED AT 6'-0" OC MAX.
4. BRACES SHALL BE DESIGNED WITH A MINIMUM COMPRESSION LOADS 1000 LBS PER LINER FOOT OF CHANNEL LENGTH
5. SEE GENERAL NOTE 8. IN THIS SHEET FOR ADDITIONAL REQUIREMENTS

1 / SL101 BRACING REQUIREMENT AT NEW CONCRETE LINING

SCALE : 1/2" = 1'-0"

| REVISION NO. | DATE | REVISIONS | BY |
|---|---|---|---|
| | | | |

ATHER R. DAR
LICENSED PROFESSIONAL ENGINEER
No. 7808-S
HAWAII U.S.A.
Exp. Date: 4-30-20

THIS WORK WAS PREPARED BY ME OR UNDER MY SUPERVISION AND CONSTRUCTION OF THIS PROJECT WILL BE UNDER MY OBSERVATION

DEPARTMENT OF HAWAIIAN HOMELAND

NANAKULI FLOOD CONTROL CHANNEL IMPROVEMENTS
NANAKULI VALLEY, OAHU HAWAII

CONCRETE LINING GENERAL NOTES

| | |
|---|---|
| DESIGNED BY: | TTP |
| DRAWN BY: | AK, AP, DL |
| CHECKED BY: | AD |
| SUPV: | |
| DATE: | 03/05/2019 |

HAWAII ENGINEERING GROUP, Inc.
Civil & Structural Engineers
1088 BISHOP STREET #2506
HONOLULU, HI 96813
Tel: 808-533-2092

JOB NO.

SHEET SL101
212 OF 225 SHTS

FILE ___ DRAWER ___ ___ FOLDER ___ ___

Plot date: 15-Apr-2020
Full Size Plot
J:/2017 Projects/17-140 DHHL Nanakuli & Wamanalo Flood Control Channel Improvements/Drawings/Structural/ME10/SL102

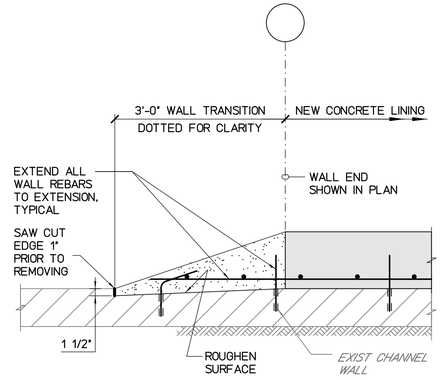


PLAN VIEW

5 SL102 TYPICAL TRANSITION AT WALL END

NOT TO SCALE

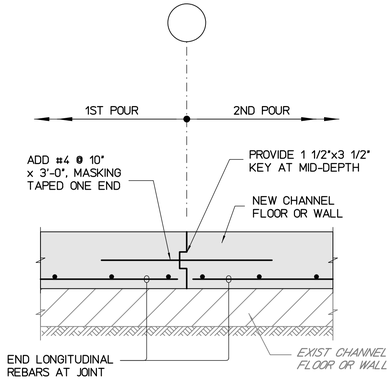


CONSTRUCTION JOINT AT GRID LINES

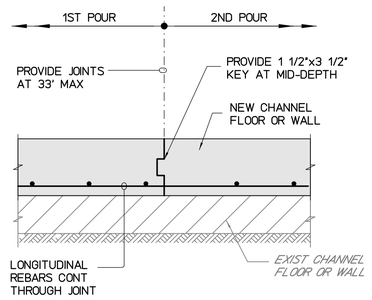


CONSTRUCTION JOINT BETWEEN GRID LINES

6 SL102 TYPICAL CONSTRUCTION JOINTS

NOT TO SCALE

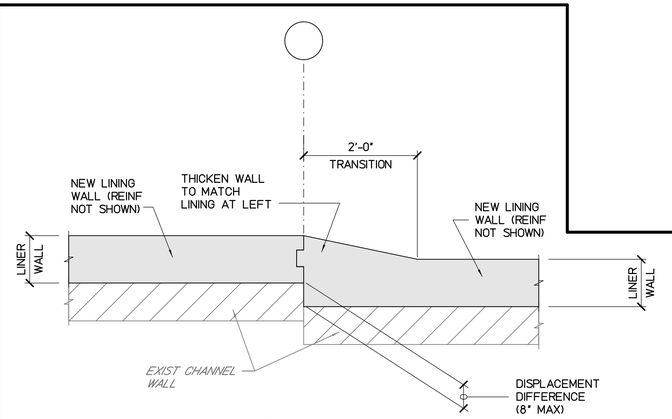


PLAN VIEW

7 SL102 TYPICAL TRANSITION AT DIFFERENT WALL DISPLACEMENTS AT JOINT

NOT TO SCALE

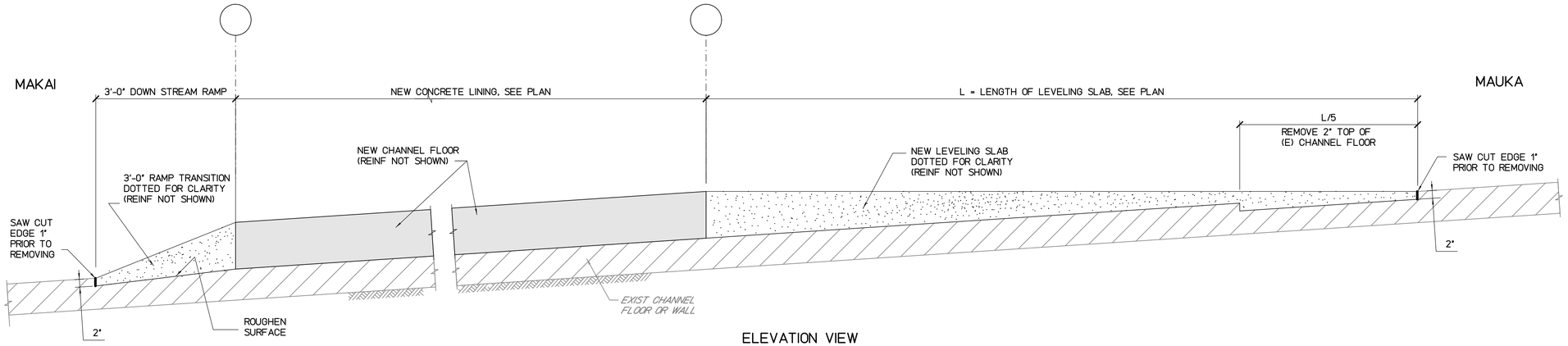


ELEVATION VIEW

3 SL102 TYPICAL MAKAI TRANSITION RAMP AND MAUKA LEVELING SLAB LAYOUT

NOT TO SCALE

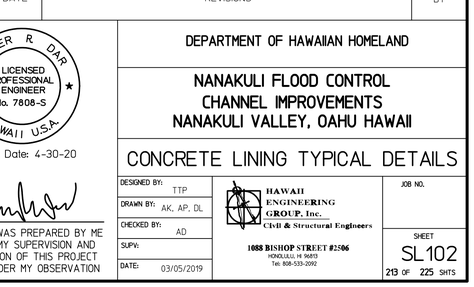


4 SL102 TYPICAL (E) WEEPHOLE BLOCKOUT

NOT TO SCALE

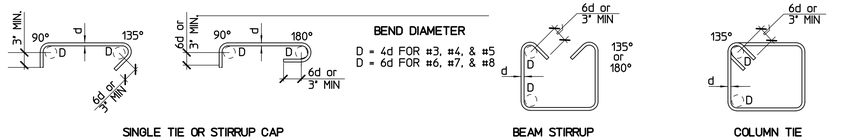


BEAM STIRRUPS AND COLUMN TIES ONLY

| MIN SPLICE & EMBEDMENT LENGTHS | | | | | | | |
|---|---|---|---|---|---|---|---|
| BAR SIZE | LAP SPLICE | EMBEDMENT IN CONC | | | | | NOTES |
| | IN CMU | IN CONCRETE | | STRAIGHT | | w/ STD HOOK | |
| | | BOT BAR | TOP BAR | BOT BAR | TOP BAR | | |
| #4 | 26" | 25" | 33" | 19" | 25" | 10 | 1. LENGTHS ARE FOR CONCRETE W/ BARS SPACED 6" MIN. INCREASE BAR LENGTH 25% FOR BARS SPACED LESS THAN 6" |
| #5 | 40" | 31" | 41" | 24" | 31" | 12" | 2. "TOP BARS" ARE HORIZONTAL BARS WITH 12" OR MORE OF CONCRETE CAST BELOW. |
| #6 | 54" | 37" | 49" | 29" | 37" | 15" | 3. SPLICE LENGTH BASED ON CLASS 'B' SPLICE (ACI 318-05) |
| | | | | | | | |
| | | | | | | | |

1 SL102 REBAR SPLICE & EMBED LENGTH

NOT TO SCALE

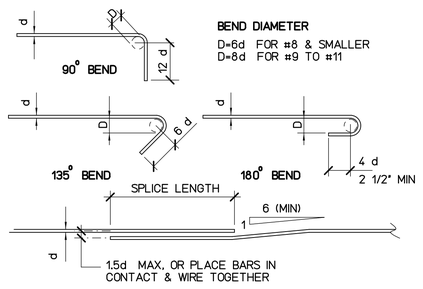


BAR LAP

ALL REINF EXCEPT BEAM STIRRUPS AND COLUMN TIES

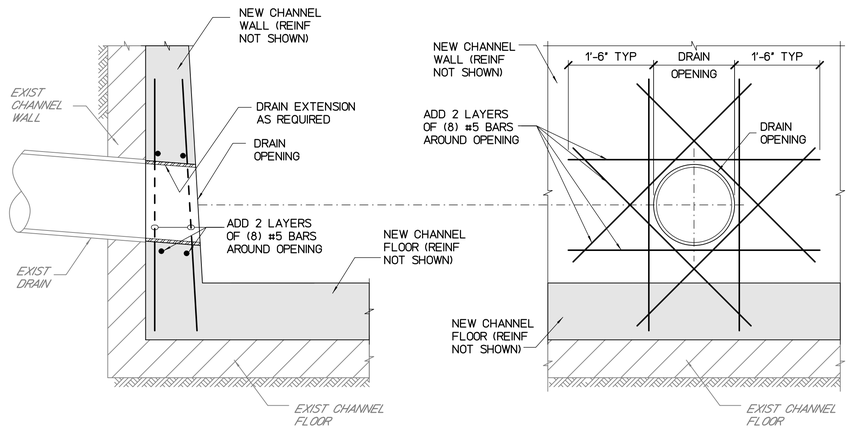


CROSS SECTION VIEW

ELEVATION SECTION VIEW

2 SL102 ADDED REBAR AT DRAINS

NOT TO SCALE

| REVISION NO. | DATE | REVISIONS | BY |
|---|---|---|---|
| | | | |

ATHER R. DAR
LICENSED PROFESSIONAL ENGINEER
No. 7808-S
HAWAII U.S.A.
Exp. Date: 4-30-20

THIS WORK WAS PREPARED BY ME OR UNDER MY SUPERVISION AND CONSTRUCTION OF THIS PROJECT WILL BE UNDER MY OBSERVATION

DEPARTMENT OF HAWAIIAN HOMELAND

NANAKULI FLOOD CONTROL CHANNEL IMPROVEMENTS
NANAKULI VALLEY, OAHU HAWAII

CONCRETE LINING TYPICAL DETAILS

| | |
|---|---|
| DESIGNED BY: | TTP |
| DRAWN BY: | AK, AP, DL |
| CHECKED BY: | AD |
| SUPV: | |
| DATE: | 03/05/2019 |

HAWAII ENGINEERING GROUP, Inc.
Civil & Structural Engineers
1088 BISHOP STREET #2506
HONOLULU HI 96813
Tel: 808-533-2092

JOB NO.

SHEET SL102
213 OF 225 SHTS

FILE ___ DRAWER ___ ___ FOLDER ___ ___

Plot date: 15-Apr-2020
Full Size Plot

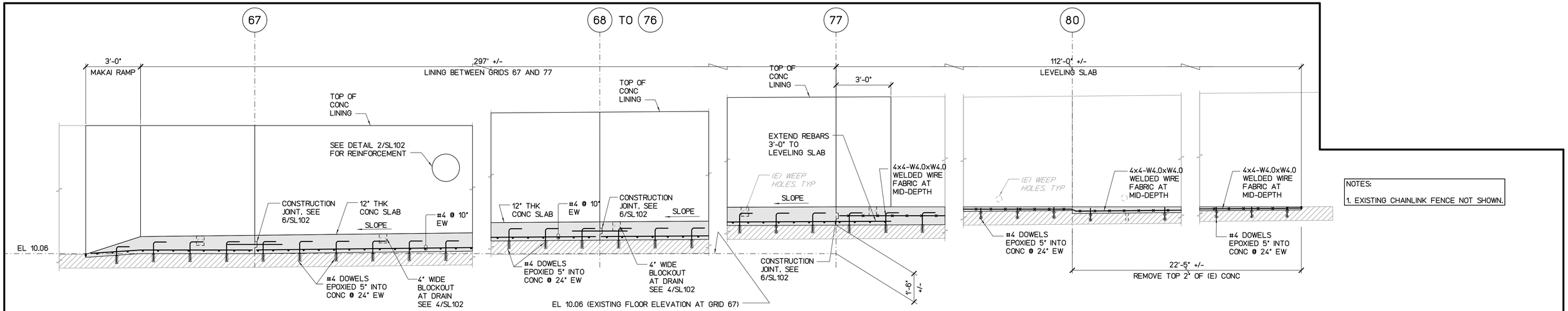


NOTES:

1. EXISTING CHAINLINK FENCE NOT SHOWN.

## 1 / SL201 CONCRETE LINING LONGITUDINAL SECTION

SCALE : 3/8" = 1'-0"

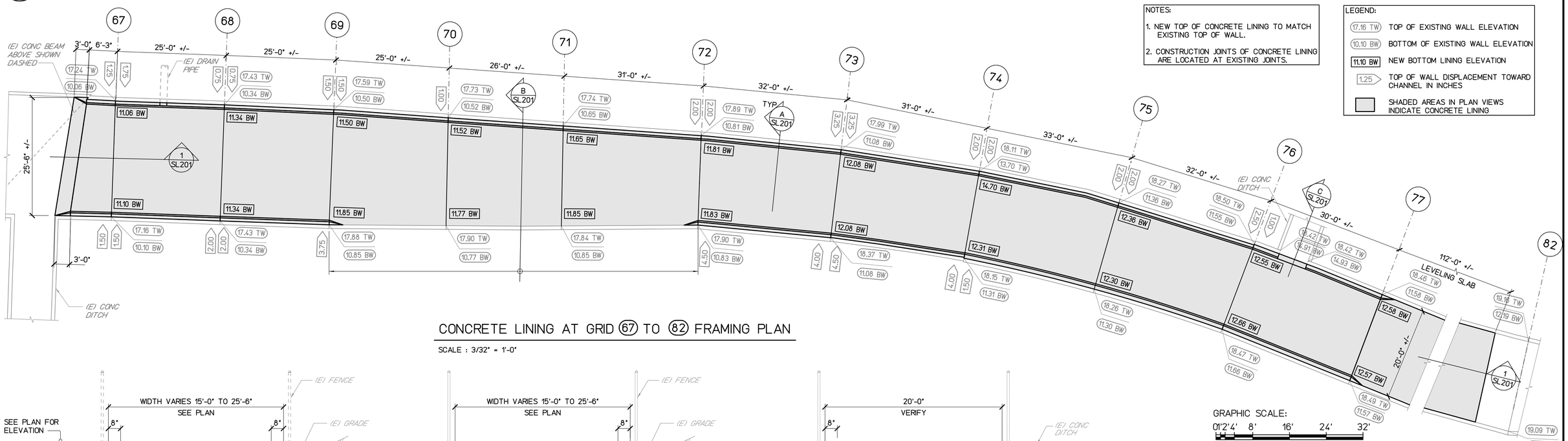


NOTES:

1. NEW TOP OF CONCRETE LINING TO MATCH EXISTING TOP OF WALL.
2. CONSTRUCTION JOINTS OF CONCRETE LINING ARE LOCATED AT EXISTING JOINTS.

LEGEND:

- (17.16 TW) TOP OF EXISTING WALL ELEVATION
- (10.10 BW) BOTTOM OF EXISTING WALL ELEVATION
- [11.10 BW] NEW BOTTOM LINING ELEVATION
- 1.25 TOP OF WALL DISPLACEMENT TOWARD CHANNEL IN INCHES
- SHADED AREAS IN PLAN VIEWS INDICATE CONCRETE LINING

## CONCRETE LINING AT GRID (67) TO (82) FRAMING PLAN

SCALE : 3/32" = 1'-0"

GRAPHIC SCALE:
0 1'2'4' 8' 16' 24' 32'
3/32"=1'-0"

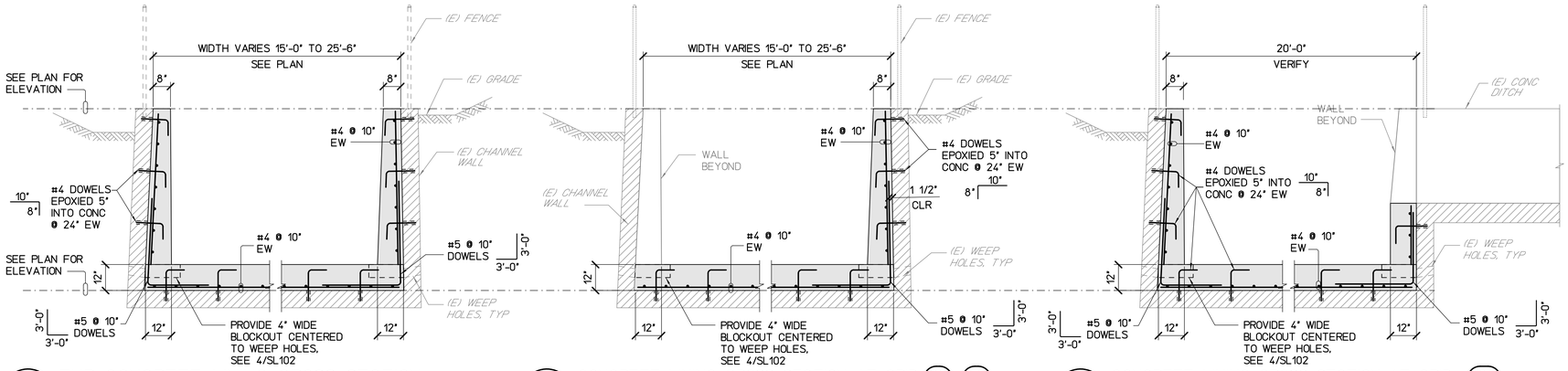


## A / SL201 TYP CONCRETE LINING CROSS SECTION

SCALE : 3/8" = 1'-0"

## B / SL201 CONCRETE LINING CROSS SECTION AT GRID (69)-(72)

SCALE : 3/8" = 1'-0"

## C / SL201 CONCRETE LINING CROSS SECTION AT GRID (76.3)

SCALE : 3/8" = 1'-0"

| REVISION NO. | DATE | REVISIONS | BY |
|---|---|---|---|
| | | | |

ARTHER R. DAR
LICENSED PROFESSIONAL ENGINEER
No. 7808-S
HAWAII U.S.A.
Exp. Date: 4-30-20

THIS WORK WAS PREPARED BY ME OR UNDER MY SUPERVISION AND CONSTRUCTION OF THIS PROJECT WILL BE UNDER MY OBSERVATION

DEPARTMENT OF HAWAIIAN HOMELAND

NANAKULI FLOOD CONTROL CHANNEL IMPROVEMENTS
NANAKULI VALLEY, OAHU HAWAII

CONCRETE LINING AT (67) TO (82) FRAMING PLAN

| | |
|---|---|
| DESIGNED BY: | TTP |
| DRAWN BY: | AK, AP, DL |
| CHECKED BY: | AD |
| SUPV: | |
| DATE: | 03/05/2019 |

HAWAII ENGINEERING GROUP, Inc.
Civil & Structural Engineers
1088 BISHOP STREET #2506
HONOLULU, HI 96813
Tel: 808-533-2092

JOB NO.

SHEET SL201
214 OF 225 SHTS

FILE ___ DRAWER ___ ___ FOLDER ___ ___

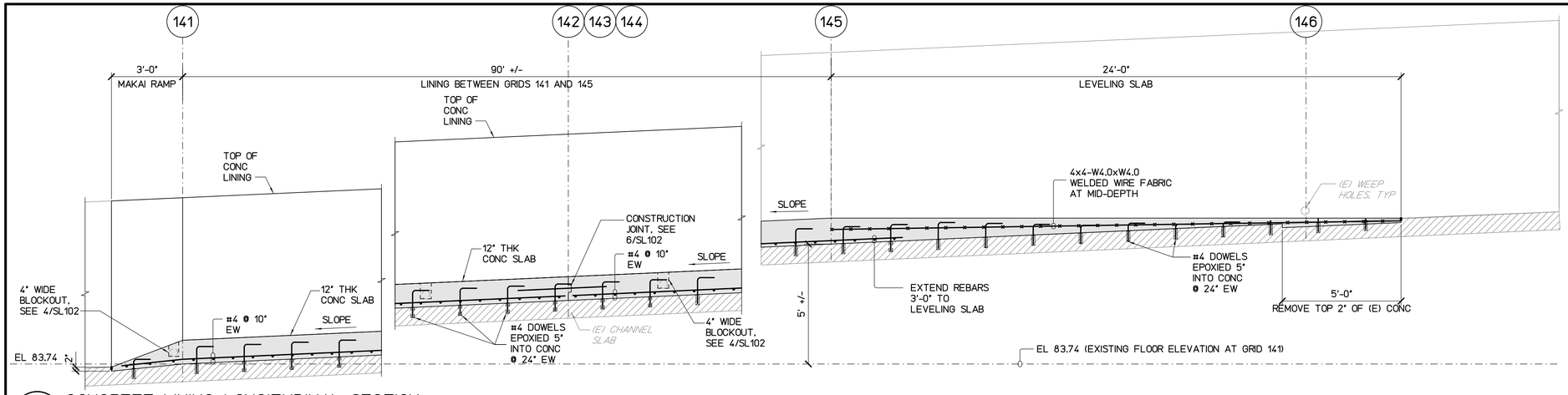


1 / SL202 CONCRETE LINING LONGITUDINAL SECTION

SCALE : 3/8" = 1'-0"

NOTES:

1. EXISTING CHAINLINK FENCE NOT SHOWN.

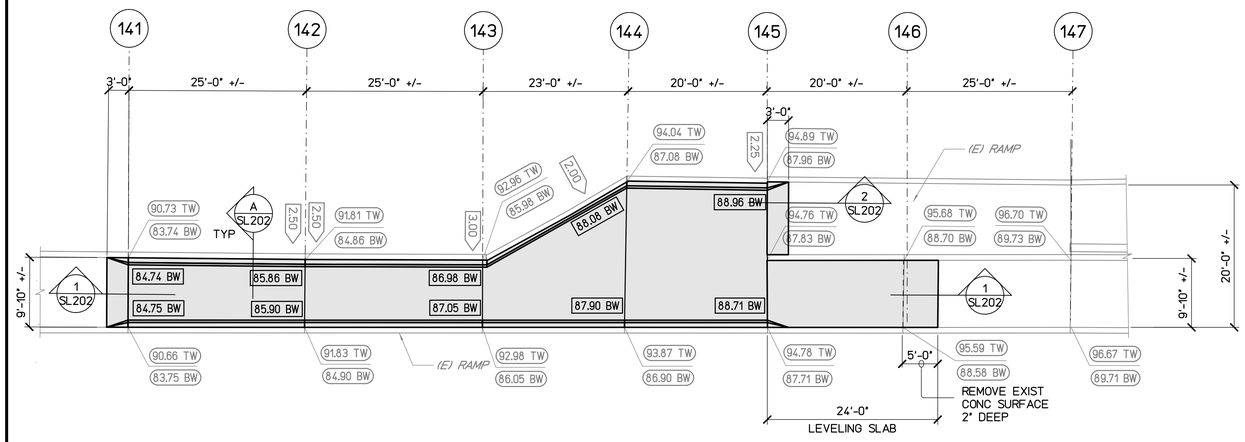


CONCRETE LINING AT GRID (141) TO (147) FRAMING PLAN

SCALE : 3/32" = 1'-0"

NOTES:

1. NEW TOP OF CONCRETE LINING TO MATCH EXISTING TOP OF WALL.
2. CONSTRUCTION JOINTS OF CONCRETE LINING ARE LOCATED AT EXISTING JOINTS.

LEGEND:

- (17.16 TW) TOP OF EXISTING WALL ELEVATION
- (10.10 BW) BOTTOM OF EXISTING WALL ELEVATION
- 11.10 BW NEW BOTTOM LINING ELEVATION
- 1.25 TOP OF WALL DISPLACEMENT TOWARD CHANNEL IN INCHES
- SHADED AREAS IN PLAN VIEWS INDICATE CONCRETE LINING

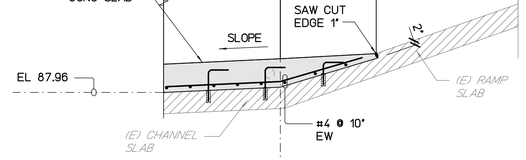


2 / SL202 LONGITUDINAL SECTION AT RAMP

SCALE : 3/8" = 1'-0"

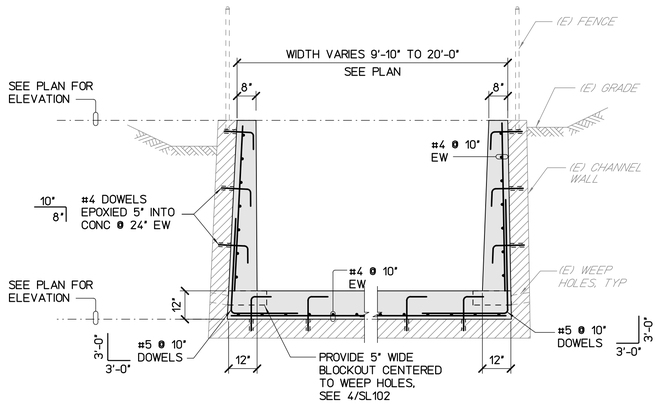


A / SL202 TYP CONCRETE LINING CROSS SECTION

SCALE : 3/8" = 1'-0"

GRAPHIC SCALE:

0 1'2'4' 8' 16' 24' 32'

3/32"=1'-0"

| REVISION NO. | DATE | REVISIONS | BY |
|---|---|---|---|
| | | | |

ATHER R. DAR
LICENSED PROFESSIONAL ENGINEER
No. 7808-S
HAWAII U.S.A.
Exp. Date: 4-30-20

THIS WORK WAS PREPARED BY ME OR UNDER MY SUPERVISION AND CONSTRUCTION OF THIS PROJECT WILL BE UNDER MY OBSERVATION

DEPARTMENT OF HAWAIIAN HOMELAND

NANAKULI FLOOD CONTROL CHANNEL IMPROVEMENTS
NANAKULI VALLEY, OAHU HAWAII

CONCRETE LINING AT (141) TO (147) FRAMING PLAN

| | |
|---|---|
| DESIGNED BY: | TTP |
| DRAWN BY: | AK, AP, DL |
| CHECKED BY: | AD |
| SUPV: | |
| DATE: | 03/05/2019 |

HAWAII ENGINEERING GROUP, Inc.
Civil & Structural Engineers
1088 BISHOP STREET #2506
HONOLULU, HI 96813
Tel: 808-533-2092

JOB NO.

SHEET SL202
215 OF 225 SHTS

FILE ___ DRAWER ___ ___ FOLDER ___ ___

Plot date: 15-Apr-2020

Full Size Plot

Plot date: 15-Apr-2020
Full Size Plot

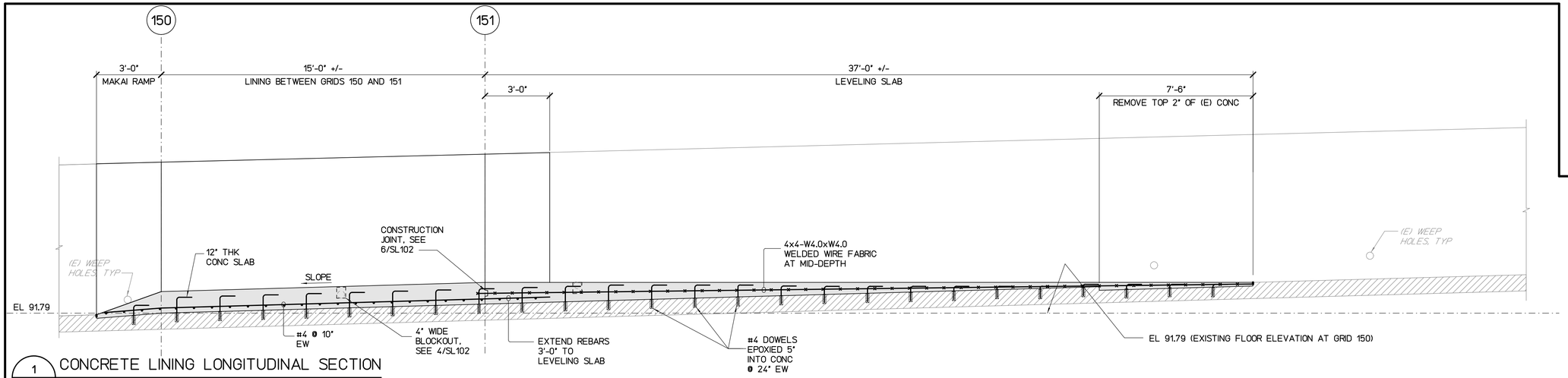


1 / SL203 CONCRETE LINING LONGITUDINAL SECTION

SCALE : 3/8" = 1'-0"

NOTES:

1. EXISTING CHAINLINK FENCE NOT SHOWN.

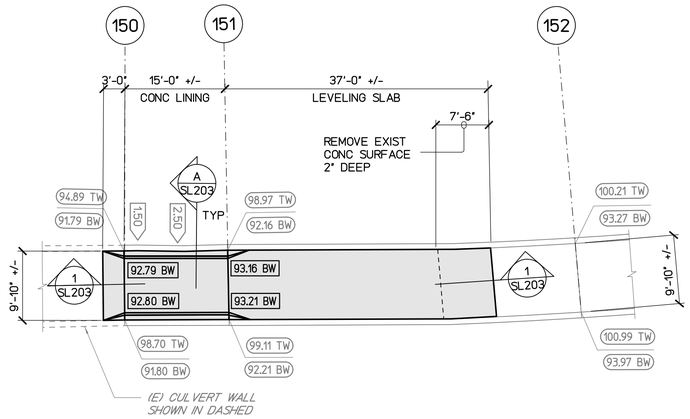


CONCRETE LINING AT GRID (150) TO (152) FRAMING PLAN

SCALE : 3/32" = 1'-0"

LEGEND:

| | |
|---|---|
| 17.16 TW | TOP OF EXISTING WALL ELEVATION |
| 10.10 BW | BOTTOM OF EXISTING WALL ELEVATION |
| 11.10 BW | NEW BOTTOM LINING ELEVATION |
| 1.25 | TOP OF WALL DISPLACEMENT TOWARD CHANNEL IN INCHES |
| | SHADED AREAS IN PLAN VIEWS INDICATE CONCRETE LINING |

NOTES:

1. NEW TOP OF CONCRETE LINING TO MATCH EXISTING TOP OF WALL.
2. CONSTRUCTION JOINTS OF CONCRETE LINING ARE LOCATED AT EXISTING JOINTS.

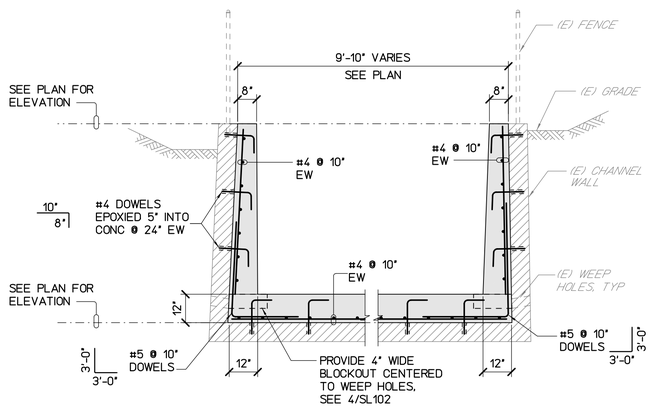


A / SL203 TYP CONCRETE LINING CROSS SECTION

SCALE : 3/8" = 1'-0"

GRAPHIC SCALE:

0 1' 2' 4' 8' 16' 24' 32'

3/32"=1'-0"

| REVISION NO. | DATE | REVISIONS | BY |
|---|---|---|---|
| | | | |

ATHER R. DAR
LICENSED PROFESSIONAL ENGINEER
No. 7808-S
HAWAII U.S.A.
Exp. Date: 4-30-20

THIS WORK WAS PREPARED BY ME OR UNDER MY SUPERVISION AND CONSTRUCTION OF THIS PROJECT WILL BE UNDER MY OBSERVATION

DEPARTMENT OF HAWAIIAN HOMELAND

NANAKULI FLOOD CONTROL CHANNEL IMPROVEMENTS
NANAKULI VALLEY, OAHU HAWAII

CONCRETE LINING AT (150) TO (152) FRAMING PLAN

| | |
|---|---|
| DESIGNED BY: | TTP |
| DRAWN BY: | AK, AP, DL |
| CHECKED BY: | AD |
| SUPV: | |
| DATE: | 03/05/2019 |

HAWAII ENGINEERING GROUP, Inc.
Civil & Structural Engineers
1088 BISHOP STREET #2506
HONOLULU, HI 96813
Tel: 808-533-2092

JOB NO.

SHEET SL203
216 OF 225 SHTS

FILE ___ DRAWER ___ ___ FOLDER ___ ___

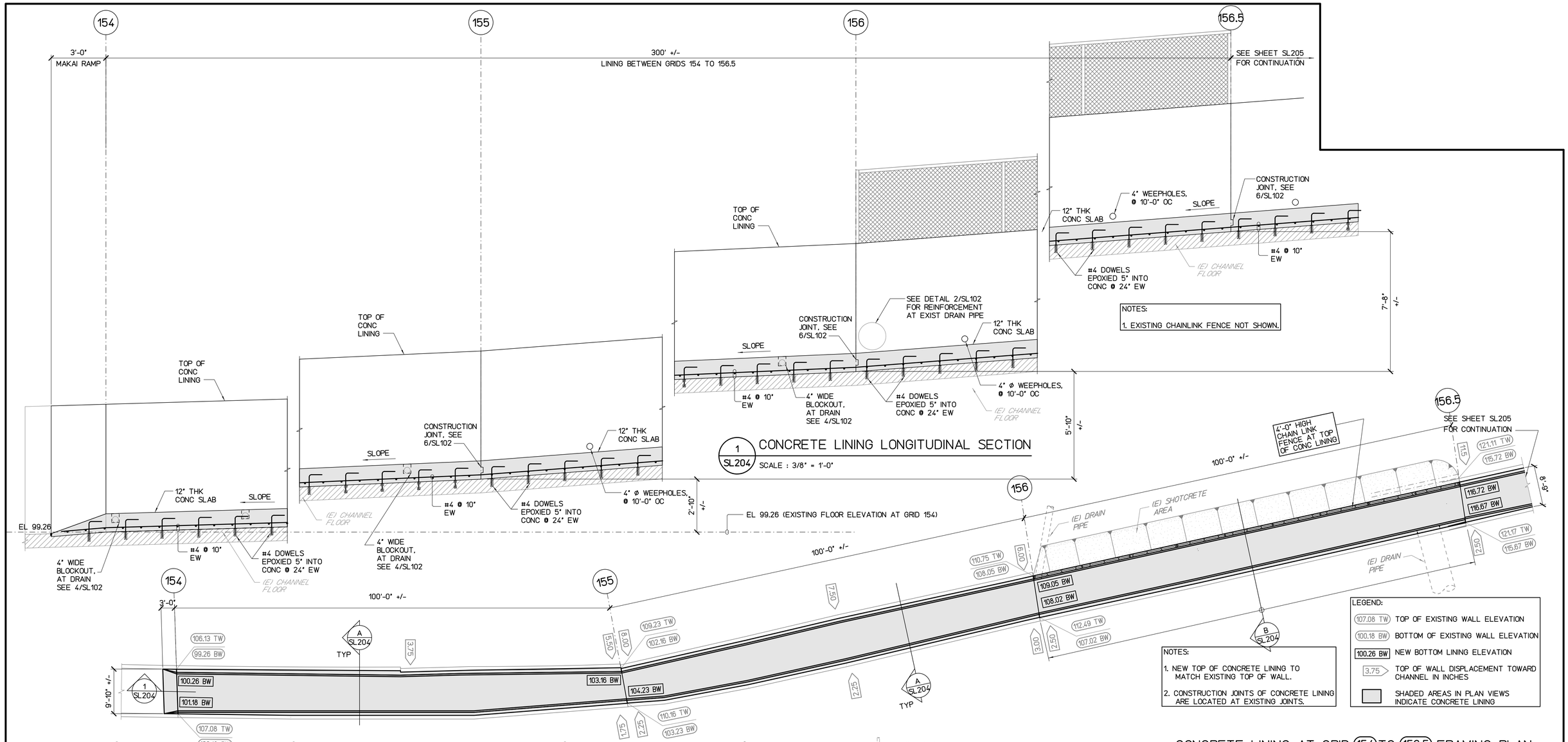


NOTES:

1. EXISTING CHAINLINK FENCE NOT SHOWN.

1 SL204 CONCRETE LINING LONGITUDINAL SECTION

SCALE : 3/8" = 1'-0"

NOTES:

1. NEW TOP OF CONCRETE LINING TO MATCH EXISTING TOP OF WALL.
2. CONSTRUCTION JOINTS OF CONCRETE LINING ARE LOCATED AT EXISTING JOINTS.

LEGEND:

| | |
|---|---|
| 107.08 TW | TOP OF EXISTING WALL ELEVATION |
| 100.18 BW | BOTTOM OF EXISTING WALL ELEVATION |
| 100.26 BW | NEW BOTTOM LINING ELEVATION |
| 3.75 | TOP OF WALL DISPLACEMENT TOWARD CHANNEL IN INCHES |
| | SHADED AREAS IN PLAN VIEWS INDICATE CONCRETE LINING |

CONCRETE LINING AT GRID 154 TO 156.5 FRAMING PLAN

SCALE : 3/32" = 1'-0"

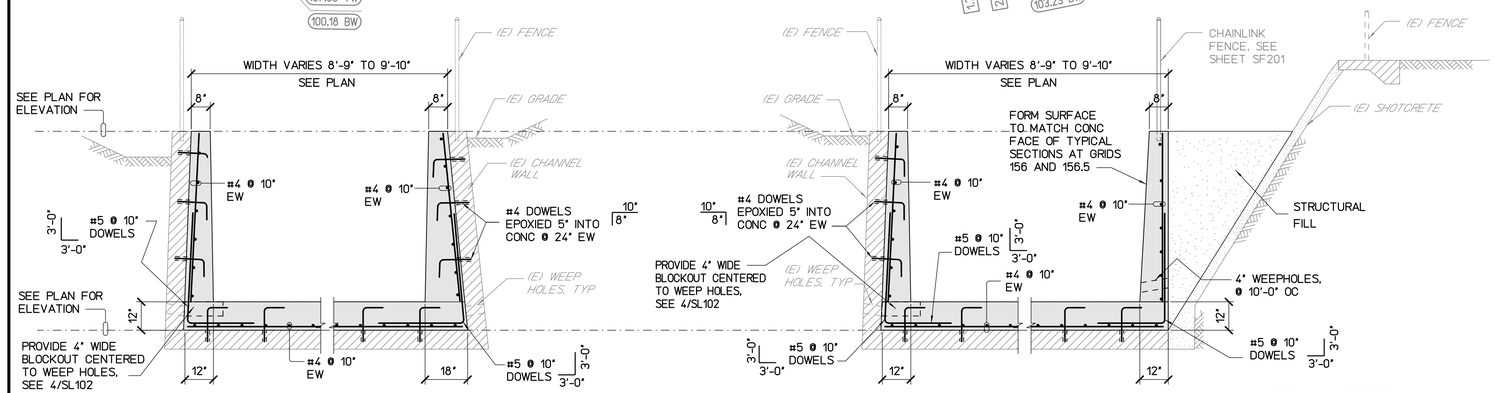


A SL204 TYP CONCRETE LINING CROSS SECTION

SCALE : 3/8" = 1'-0"

B SL204 CONCRETE LINING CROSS SECTION AT GRID 156 TO 156.5

SCALE : 3/8" = 1'-0"

GRAPHIC SCALE:

0 1' 2' 4' 8' 16' 24' 32'

3/32"=1'-0"

| REVISION NO. | DATE | REVISIONS | BY |
|---|---|---|---|
| | | | |

ATHER R. DAR
LICENSED PROFESSIONAL ENGINEER
No. 7808-S
HAWAII U.S.A.

Exp. Date: 4-30-20

THIS WORK WAS PREPARED BY ME OR UNDER MY SUPERVISION AND CONSTRUCTION OF THIS PROJECT WILL BE UNDER MY OBSERVATION

DEPARTMENT OF HAWAIIAN HOMELAND

NANAKULI FLOOD CONTROL
CHANNEL IMPROVEMENTS
NANAKULI VALLEY, OAHU HAWAII

CONCRETE LINING AT 154 TO 156.5 FRAMING PLAN

| | |
|---|---|
| DESIGNED BY: | TTP |
| DRAWN BY: | AK, AP, DL |
| CHECKED BY: | AD |
| SUPV: | |
| DATE: | 03/05/2019 |

HAWAII ENGINEERING GROUP, Inc.
Civil & Structural Engineers
1088 BISHOP STREET #2506
HONOLULU, HI 96813
Tel: 808-533-2092

JOB NO.

SHEET
SL204
217 OF 225 SHTS

FILE ___ DRAWER ___ FOLDER ___

Plot date: 15-Apr-2020

Full Size Plot

Plot date: 15-Apr-2020
Full Size Plot

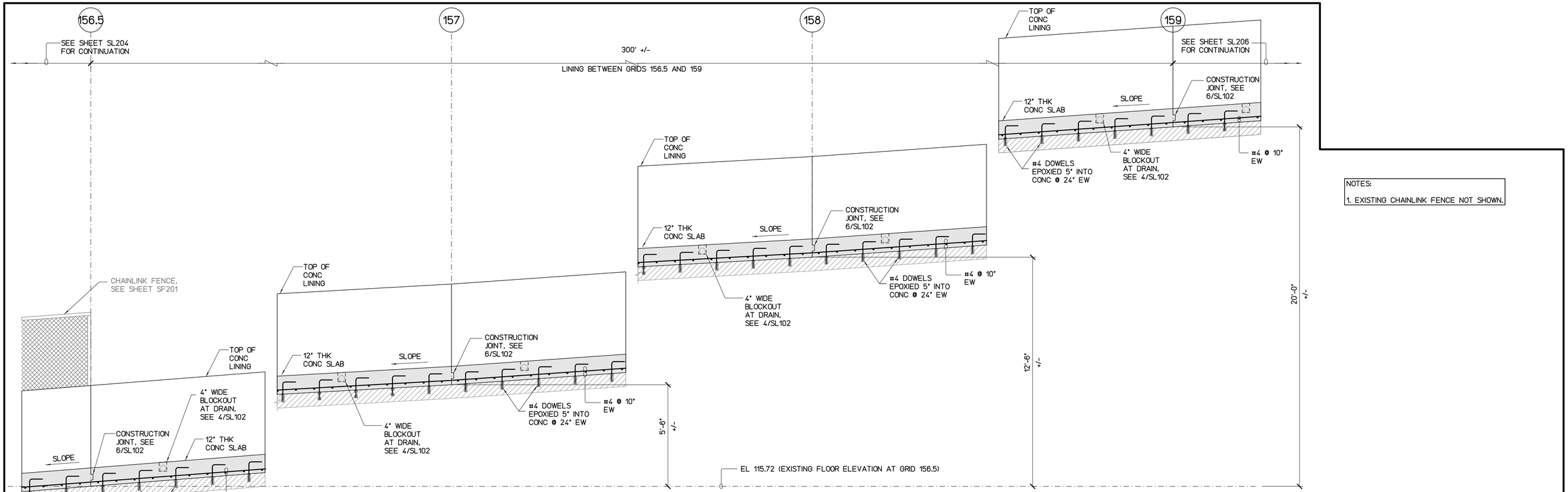


1 SL205 CONCRETE LINING LONGITUDINAL SECTION

SCALE : 3/8" = 1'-0"

NOTES:

1. EXISTING CHAINLINK FENCE NOT SHOWN.

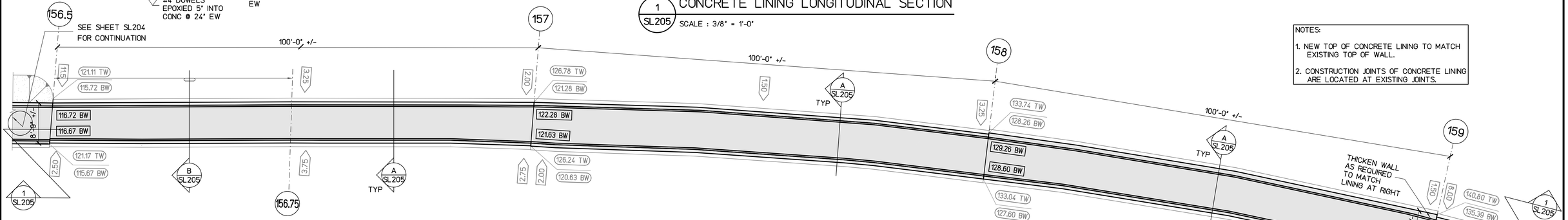


CONCRETE LINING AT GRID (156.5) TO (159) FRAMING PLAN

SCALE : 3/32" = 1'-0"

NOTES:

1. NEW TOP OF CONCRETE LINING TO MATCH EXISTING TOP OF WALL.
2. CONSTRUCTION JOINTS OF CONCRETE LINING ARE LOCATED AT EXISTING JOINTS.

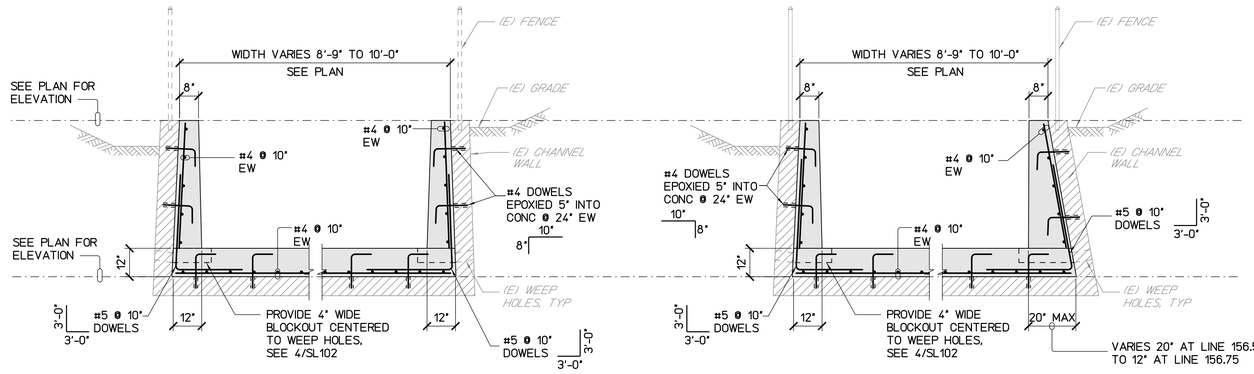


A SL205 TYP CONCRETE LINING CROSS SECTION

SCALE : 3/8" = 1'-0"

B SL205 CONCRETE LINING CROSS SECTION AT GRID (156) TO (156.5)

SCALE : 3/8" = 1'-0"

LEGEND:

- (121.17 TW) TOP OF EXISTING WALL ELEVATION
- (115.67 BW) BOTTOM OF EXISTING WALL ELEVATION
- [116.67 BW] NEW BOTTOM LINING ELEVATION
- 3.75 TOP OF WALL DISPLACEMENT TOWARD CHANNEL IN INCHES
- SHADED AREAS IN PLAN VIEWS INDICATE CONCRETE LINING

GRAPHIC SCALE:

0 1' 2' 4' 8' 16' 24' 32'

3/32"=1'-0"

| REVISION NO. | DATE | REVISIONS | BY |
|---|---|---|---|

ATHER R. DAR
LICENSED PROFESSIONAL ENGINEER
No. 7808-S
HAWAII U.S.A.
Exp. Date: 4-30-20

THIS WORK WAS PREPARED BY ME OR UNDER MY SUPERVISION AND CONSTRUCTION OF THIS PROJECT WILL BE UNDER MY OBSERVATION

DEPARTMENT OF HAWAIIAN HOMELAND

NANAKULI FLOOD CONTROL CHANNEL IMPROVEMENTS
NANAKULI VALLEY, OAHU HAWAII

CONCRETE LINING AT (156.5) TO (159) FRAMING PLAN

| | |
|---|---|
| DESIGNED BY: | TTP |
| DRAWN BY: | AK, AP, DL |
| CHECKED BY: | AD |
| SUPV: | |
| DATE: | 03/05/2019 |

HAWAII ENGINEERING GROUP, Inc.
Civil & Structural Engineers
1088 BISHOP STREET #2506
HONOLULU, HI 96813
Tel: 808-533-2092

JOB NO.

SHEET SL205
218 OF 225 SHTS

FILE ___ DRAWER ___ ___ FOLDER ___ ___

Plot date: 15-Apr-2020
Full Size Plot

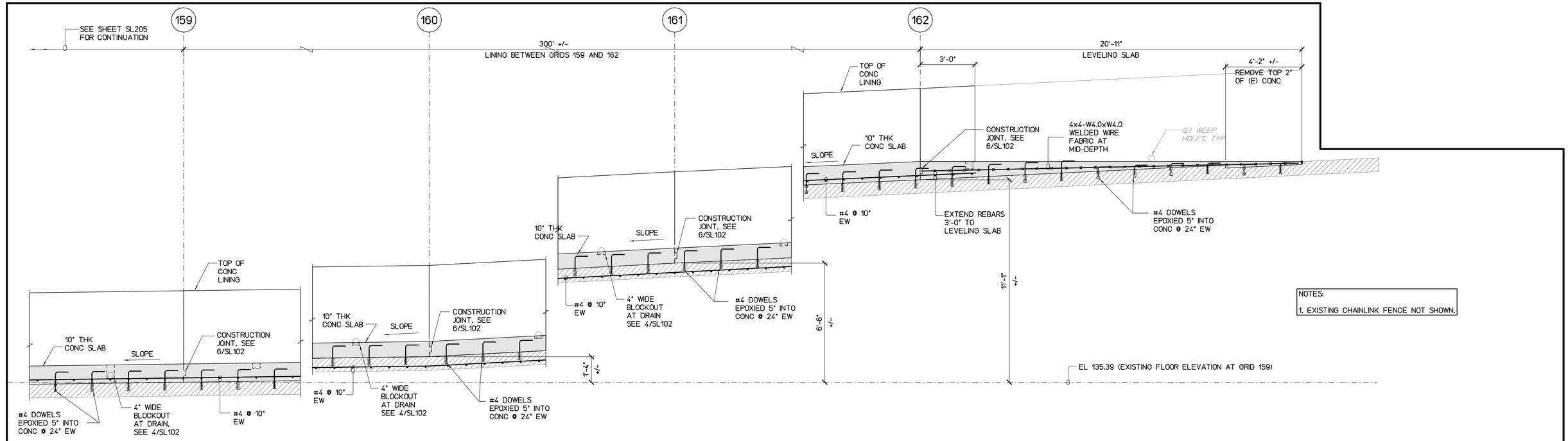


1 SL206 CONCRETE LINING LONGITUDINAL SECTION

SCALE : 3/8" = 1'-0"

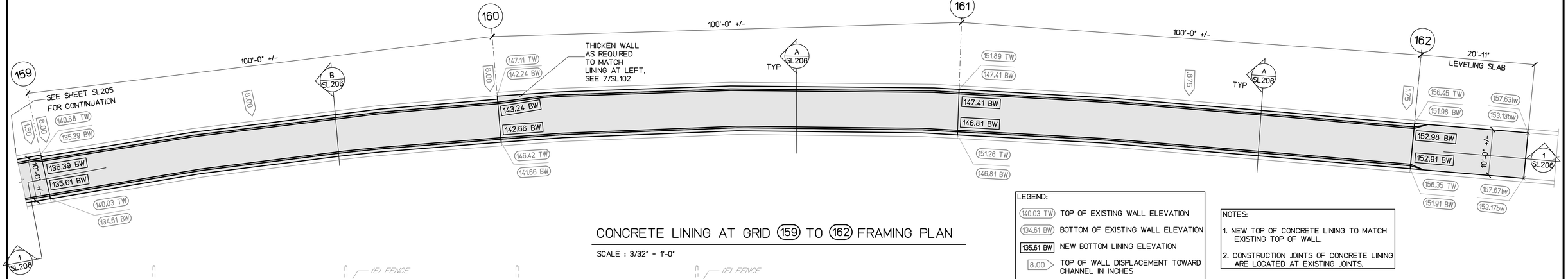


CONCRETE LINING AT GRID (159) TO (162) FRAMING PLAN

SCALE : 3/32" = 1'-0"

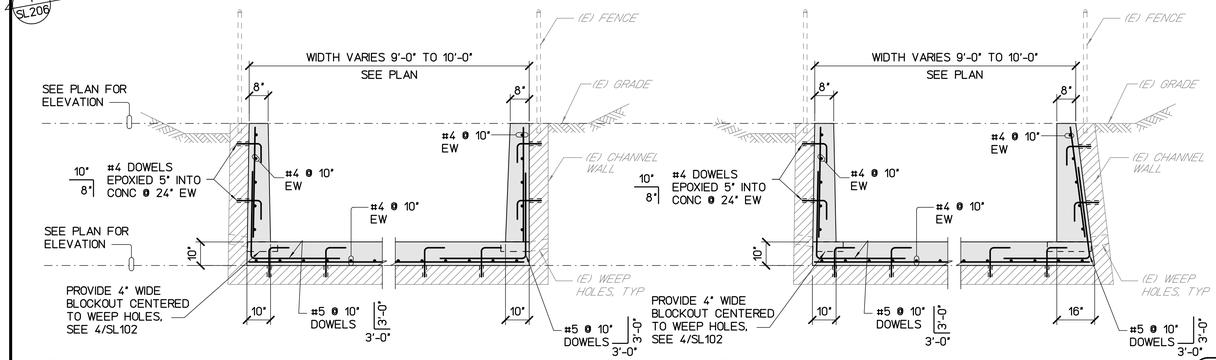


A SL206 TYP CONCRETE LINING CROSS SECTION

SCALE : 3/8" = 1'-0"

B SL206 CONCRETE LINING CROSS SECTION AT GRID (159) - (160)

SCALE : 3/8" = 1'-0"

LEGEND:

| | |
|---|---|
| (140.03 TW) | TOP OF EXISTING WALL ELEVATION |
| (134.61 BW) | BOTTOM OF EXISTING WALL ELEVATION |
| 135.61 BW | NEW BOTTOM LINING ELEVATION |
| 8.00 | TOP OF WALL DISPLACEMENT TOWARD CHANNEL IN INCHES |
| | SHADED AREAS IN PLAN VIEWS INDICATE CONCRETE LINING |

NOTES:

1. NEW TOP OF CONCRETE LINING TO MATCH EXISTING TOP OF WALL.
2. CONSTRUCTION JOINTS OF CONCRETE LINING ARE LOCATED AT EXISTING JOINTS.

GRAPHIC SCALE:

0 1' 2' 4' 8' 16' 24' 32'

3/32"=1'-0"

| REVISION NO. | DATE | REVISIONS | BY |
|---|---|---|---|
| | | | |

ATHER R. DAR
LICENSED PROFESSIONAL ENGINEER
No. 7808-S
HAWAII U.S.A.
Exp. Date: 4-30-20

THIS WORK WAS PREPARED BY ME OR UNDER MY SUPERVISION AND CONSTRUCTION OF THIS PROJECT WILL BE UNDER MY OBSERVATION

DEPARTMENT OF HAWAIIAN HOMELAND

NANAKULI FLOOD CONTROL CHANNEL IMPROVEMENTS NANAKULI VALLEY, OAHU HAWAII

CONCRETE LINING AT (159) TO (162) FRAMING PLAN

| | |
|---|---|
| DESIGNED BY: | TTP |
| DRAWN BY: | AK, AP, DL |
| CHECKED BY: | AD |
| SUPV: | |
| DATE: | 03/05/2019 |

HAWAII ENGINEERING GROUP, Inc.
Civil & Structural Engineers
1088 BISHOP STREET #2506
HONOLULU HI 96813
Tel: 808-533-2092

JOB NO.

SHEET SL206
219 OF 225 SHTS

FILE ___ DRAWER ___ ___ FOLDER ___ ___

Plot date: 15-Apr-2020
Full Size Plot

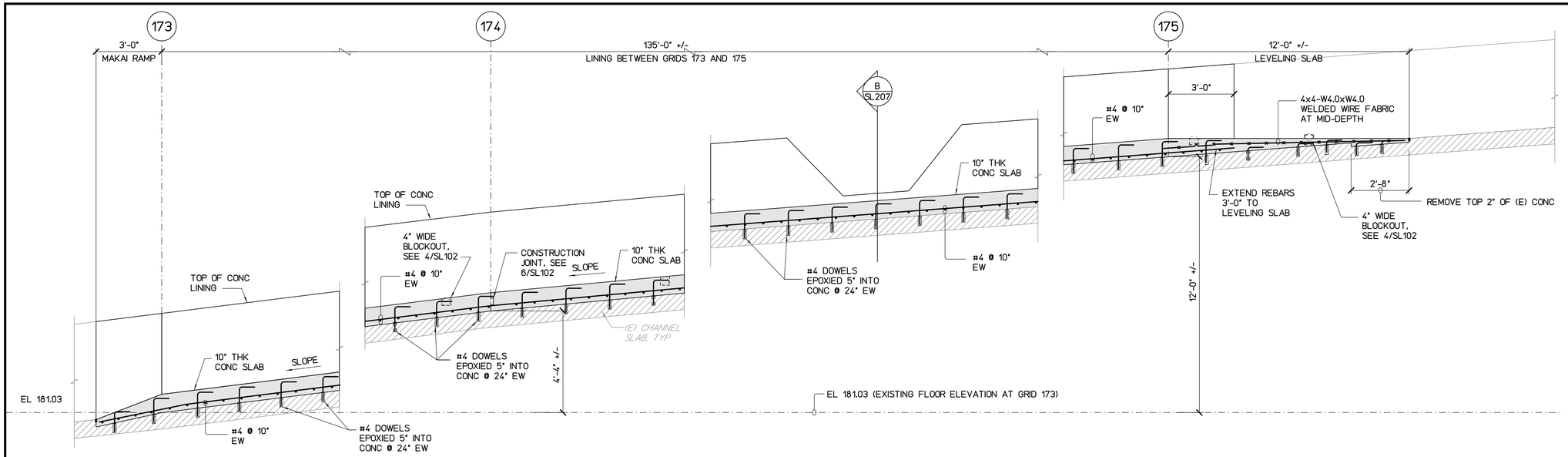


1 SL207 CONCRETE LINING LONGITUDINAL SECTION

SCALE : 3/8" = 1'-0"

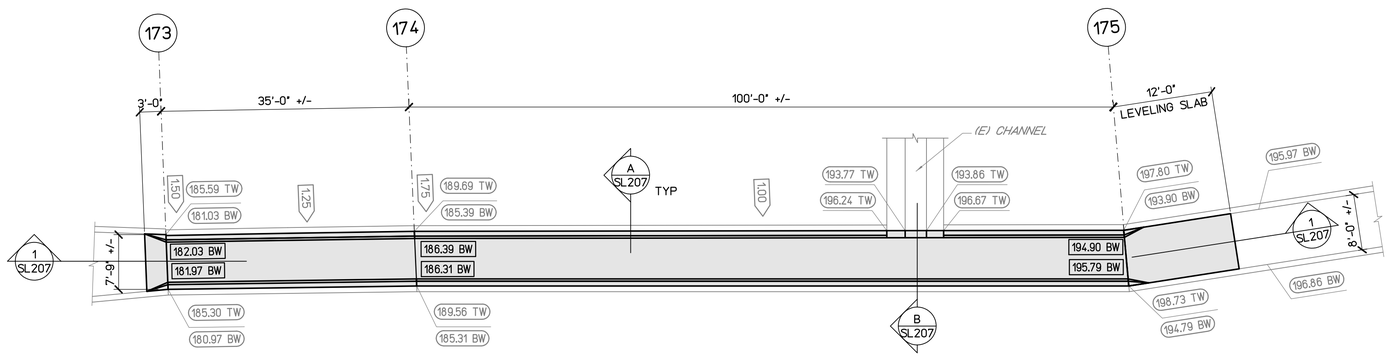


CONCRETE LINING AT GRID (173) TO (175) FRAMING PLAN

SCALE : 3/32" = 1'-0"

LEGEND:

| | |
|---|---|
| 197.80 TW | TOP OF EXISTING WALL ELEVATION |
| 193.90 BW | BOTTOM OF EXISTING WALL ELEVATION |
| 194.90 BW | NEW BOTTOM LINING ELEVATION |
| 1.00 | TOP OF WALL DISPLACEMENT TOWARD CHANNEL IN INCHES |
| | SHADED AREAS IN PLAN VIEWS INDICATE CONCRETE LINING |

NOTES:

1. NEW TOP OF CONCRETE LINING TO MATCH EXISTING TOP OF WALL.
2. CONSTRUCTION JOINTS OF CONCRETE LINING ARE LOCATED AT EXISTING JOINTS.

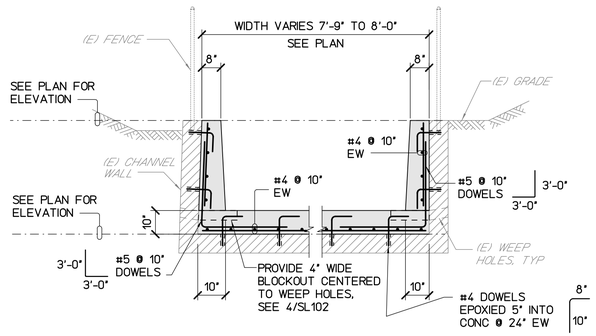


A SL207 TYP CONCRETE LINING CROSS SECTION

SCALE : 3/8" = 1'-0"

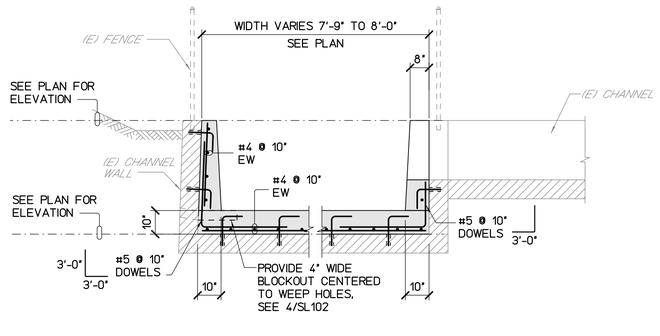


B SL207 CONCRETE LINING CROSS SECTION AT GRID (174.7)

SCALE : 3/8" = 1'-0"

GRAPHIC SCALE:

0 1'2'4' 8' 16' 24' 32'

3/32"=1'-0"

| REVISION NO. | DATE | REVISIONS | BY |
|---|---|---|---|
| | | | |

ATHER R. DAR
LICENSED PROFESSIONAL ENGINEER
No. 7808-S
HAWAII U.S.A.
Exp. Date: 4-30-20

THIS WORK WAS PREPARED BY ME OR UNDER MY SUPERVISION AND CONSTRUCTION OF THIS PROJECT WILL BE UNDER MY OBSERVATION

DEPARTMENT OF HAWAIIAN HOMELAND

NANAKULI FLOOD CONTROL CHANNEL IMPROVEMENTS
NANAKULI VALLEY, OAHU HAWAII

CONCRETE LINING AT (173) TO (175) FRAMING PLAN

| | |
|---|---|
| DESIGNED BY: | TTP |
| DRAWN BY: | AK, AP, DL |
| CHECKED BY: | AD |
| SUPV: | |
| DATE: | 03/05/2019 |

HAWAII ENGINEERING GROUP, Inc.
Civil & Structural Engineers
1088 BISHOP STREET #2506
HONOLULU, HI 96813
Tel: 808-533-2092

JOB NO.

SHEET SL207
220 OF 225 SHTS

FILE ___ DRAWER ___ ___ FOLDER ___ ___

Plot date: 15-Apr-2020
Full Size Plot
J:\2017 Projects\17-140 DHHL Nanakuli & Wamanalo Flood Control Channel Improvements\Drawings\Structural\ME10\SR201

## REPAIR NOTES:

A. CONCRETE REPAIR MATERIALS:

1. POLYMER MODIFIED REPAIR MORTAR: FACTORY BLENDED CEMENTITIOUS MATERIAL COMBINED WITH A POLYMER TYPE ADMIXTURE AND CORROSION INHIBITOR ADMIXTURE HAVING A MINIMUM COMPRESSIVE STRENGTH OF 6,000 PSI AT 28 DAYS, AND SHALL BE USED FOR ALL SPALL REPAIRS 5 SQ. FT. OR LESS IN AREA AND WHERE FORMWORK IS NOT REQUIRED.

2. PORTLAND CEMENT CONCRETE: FLOWABLE (6" TO 8" SLUMP) PORTLAND CEMENT CONCRETE, WITH MAX. AGGREGATE SIZE OF 3/8", SHALL HAVE A MINIMUM COMPRESSIVE STRENGTH OF 6,000 PSI AT 28 DAYS, A WATER-CEMENT RATIO NOT EXCEEDING 0.45 BY WEIGHT, SHALL CONTAIN A LIQUID CORROSION INHIBITING ADMIXTURE AND SHALL BE USED FOR ALL REPAIRS WHERE THE SPALL REPAIR AREA EXCEEDS 5 SQ. FT. AND/OR WHERE FORMING IS REQUIRED.

B. REBAR CORROSION PROBING:

PROBE ALL CRACKS FOR RUSTING OF UNDERLYING REBARS IN ACCORDANCE WITH 1/S-8. PROBES SHALL BE LOCATED NOT MORE THAN 5' FROM EACH END OF A CRACK AND NOT MORE THAN 10' APART ALONG THE CRACK. IF RUST IS ENCOUNTERED EXTEND THE PROBE EACH WAY FOR 6" BEYOND THE LIMITS OF RUST. IF UPON PROBING CRACKS FOR RUSTED REBARS, THE CRACKS TURN OUT TO BE SHALLOW DELAMINATIONS CREATED BY CORROSION OF THE REBARS, THE REPAIR OF THESE SHALLOW DELAMINATIONS SHALL BE PERFORMED IN ACCORDANCE WITH DETAIL 1/SR201 FOR THE PURPOSES OF THIS CONTRACT, THE TERMS "RUST" AND "CORROSION" OF REBARS MEAN THE SAME THING.

C. REPAIR PROCESSES:

THE CONCRETE REPAIR PROCESSES AND STEPS DESCRIBED HEREIN ARE RECOMMENDED AS A MINIMUM RESTORATION EFFORT. WHERE MANUFACTURER'S SPECIFICATIONS, DIRECTIONS, RECOMMENDATIONS ARE MORE EXTENSIVE OR PROVIDE CLARIFICATION TO MANUFACTURER'S REQUIREMENTS, ALL SUCH MANUFACTURER'S DIRECTIVES SHALL BE FOLLOWED.

1. THE CONTRACTOR SHALL PROVIDE A CATCHMENT/ CONTAINMENT DEVICE TO CATCH AND PREVENT ALL LOOSE CONCRETE, OIL, DIRT, COATINGS, TOOLS, ETC., AS A RESULT OF THIS PROJECT, FROM FALLING INTO THE STREAM CHANNEL.

2. BOTH SPALLS AND DELAMINATIONS ARE CALLED OUT AS SPALLS ON THE PLANS AND NO SEPARATE DISTINCTION IS MADE SINCE REPAIRS ARE THE SAME.

3. CHECK SURFACES TO ENSURE THAT IT IS FREE FROM LOOSE AGGREGATE OR ADDITIONAL DELAMINATIONS.

4. EDGES OF THE CHIPPED OUT AREA SHALL BE SQUARE CUT PERPENDICULAR TO THE CONCRETE SURFACE FOR A MINIMUM DEPTH OF 1 INCH UNLESS NOTED OTHERWISE. MAKE 1/4" MIN. TO 1/2" MAX DEEP SQUARE SAW-CUT ALONG STRAIGHT LINES AT 90° ANGLES AT THE CONCRETE SURFACE. USE CHIPPING GUN TO PRODUCE THE REMAINDER OF THE 1" MIN. SQUARE CUT. DO NOT SAW CUT THROUGH EXISTING REBARS. SHOULD ANY REBAR BE PARTIALLY CUT, REPAIR BY WELD SPLICING PER DETAIL 2/SR201. IF THE EFFECTIVE SIZE OF THE REBAR IS LESS THAN THE ALLOWABLE SHOWN IN CHART A/SR201.

5. REMOVE ALL DELAMINATED, LOOSE, SPALLED, HONEY COMBED, RUST-STAINED & OTHERWISE DEFECTIVE CONCRETE TO EXPOSE ALL SURFACES OF REINFORCING BARS TO A POINT AT A MINIMUM OF 3/4" BEHIND REINFORCING BARS UNTIL SOUND CONCRETE IS ENCOUNTERED. SOUND CONCRETE WILL BE SPALL FREE WITHOUT CRACKS, DELAMINATIONS, VOIDS, AND SHALL BE FIRMLY BONDED TO SURROUNDING CONCRETE. WHEN STRUCK WITH A HAMMER, SOUND CONCRETE WILL NOT PRODUCE A HOLLOW SOUND. CHIP CONCRETE TO OBTAIN A SURFACE PROFILE OF-1/16" IN DEPTH WITH A NEW FRACTURED AGGREGATE SURFACE. REMOVE LOOSE CONCRETE, DUST, OIL, GREASE, DIRT AND FOREIGN MATERIALS. SEE DETAIL 3/SR201.

6. WHERE RUSTED REBARS ARE ENCOUNTERED, REMOVE ALL RUST FROM ALL AROUND THE BAR BY POWER TOOL CLEANING. AFTER THE BAR HAS BEEN CLEANED, MEASURE THE DIAMETER OF THE EXPOSED REINFORCING BARS AT THE EDGE OF THE CHIPPED OUT AREA TO DETERMINE THE ORIGINAL BAR SIZE. COMPARE THE BAR DIAMETER, WITHIN THE CHIPPED OUT AREA, WITH CHART A/SR201 AND REPLACE BARS AS REQUIRED. PROVIDE SPLICE LENGTH AS SHOWN AND SPECIFIED TO PORTIONS OF EXISTING BARS THAT REMAIN. SEE DETAIL 2/SR201.

7. CARE SHALL BE TAKEN TO AVOID DAMAGING SOUND CONCRETE AND REINFORCING. SURROUNDING AREAS SHALL BE SOUNDED WITH A SOUNDING DEVICE SUCH AS A METAL HAMMER TO VERIFY EXTENT OF DAMAGED CONCRETE.

8. COAT THE REINFORCING BARS AND CONCRETE SUBSTRATE WITH RUST INHIBITING 2-PART EPOXY BONDING COMPOUND. FOLLOW MANUFACTURER'S RECOMMENDATIONS FOR SURFACE PREPARATION.

9. CONCRETE, CORROSION RESIDUE, WATER AND OTHER BY-PRODUCTS OR DEMOLITION SHALL NOT BE ALLOWED TO ENTER THE WATER. THE CONTRACTOR SHALL SUBMIT ITS PROPOSED DEMOLITION PROCEDURES TO THE OFFICER-IN-CHARGE FOR APPROVAL.

10. SPALL REPAIRS 5 SQ. FT. OR LESS MAY BE ACCOMPLISHED WITHOUT FORM WORK BY USING A REPAIR MORTAR.

11. WHERE USED, FORM SHALL BE WATERTIGHT.

12. REMOVE EXCESS CEMENT AND PARTICULATE SLURRY BEFORE CURING.

13. DO NOT FEATHER EDGES OF REPAIR.

14. AFTER REPAIRS HAVE BEEN CURED A MINIMUM OF 14 DAYS, THE REPAIRED AREAS SHALL BE CLEANED AND COATED WITH A CONCRETE SEALER. THE COATED AREA SHALL EXTEND A MINIMUM OF 6 INCHES ALL AROUND THE REPAIR AREA.

15. CONTRACTOR SHALL VERIFY WITH THE OFFICER-IN-CHARGE ALL REPAIR TYPES THAT DIFFER FROM THE CONTRACT DRAWINGS AND SHALL NOT PROCEED WITH WORK UNTIL APPROVED BY THE OFFICER-IN- CHARGE.

16. THE CONTRACTOR SHALL SOUND AND VERIFY THE LOCATIONS AND QUANTITIES OF THE VARIOUS TYPES OF REPAIRS PRIOR TO BEGINNING THE CONCRETE REPAIR WORK. NOTIFY THE OFFICER-IN-CHARGE OF THE RESULTS OF THE SOUNDING SURVEY. CONTRACTOR SHALL NOT PROCEED UNTIL THE RESULTS OF THE CONTRACTOR'S SOUNDING SURVEY IS COMPLETED AND QUANTITIES ARE APPROVED BY THE OFFICER-IN-CHARGE.

17. THE CONTRACTOR SHALL REPAINT ANY AREAS, INCLUDING THE ADJACENT AREAS, THAT ARE AFFECTED BY THE REPAIRS

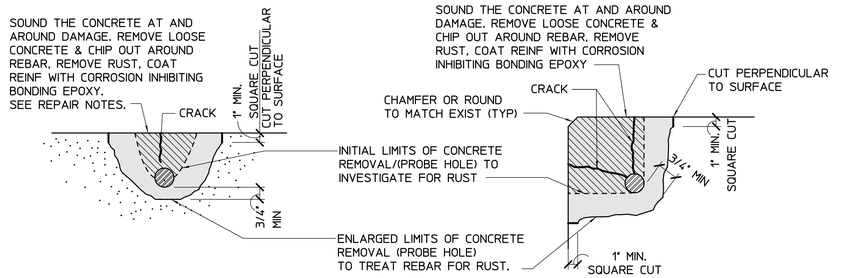


NOTE:

IF RUST CAUSES CROSS SECTIONAL AREA OF REBAR TO BE REDUCED BY LESS THAN THE MINIMUM INDICATED ON CHART 5/S-8 WELD SPLICE A NEW REBAR.

3 / SR201 REPAIR TYPE 3 - REMOVAL & REPATCH OF SPALLED CONCRETE

NTS

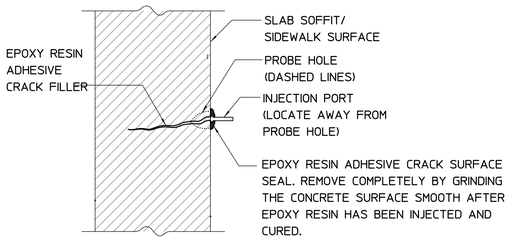


NOTES:

1. USE THIS DETAIL TO REPAIR CRACKS NOT CAUSED BY CORROSION OF THE UNDERLYING REBAR(S). IF REBARS ARE CORRODED SEE DETAIL A/SR201
2. REPAIR PROBE HOLES WITH POLYMER MODIFIED REPAIR MORTAR
3. PROVIDE INJECTION PORTS ALONG CRACK AT MAXIMUM INTERVALS EQUAL TO THE WIDTH OR THICKNESS OF THE MEMBER BEING INJECTED.
4. APPLY EPOXY CRACK SURFACE SEAL OVER CRACK AFTER ENTRY PORTS HAVE BEEN INSTALLED, DO NOT PROCEED WITH EPOXY INJECTION UNTIL SURFACE SEAL HAS CURED.
5. INJECT EPOXY ACCORDING TO THE PROCEDURES DESCRIBED IN SP 70.8.C.2 OF SPECIAL PROVISIONS SECTION SP-70
6. PERFORM EPOXY INJECTION IN ONE CONTINUOUS PROCESS.
7. USE HIGH-MODULUS, LOW VISCOSITY EPOXY FOR INJECTION.

1 / SR201 REPAIR TYPE 1 - EPOXY INJECTION

NTS

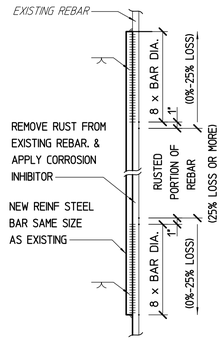


SPLICE AT RUSTED BAR

2 / SR201 REPAIR TYPE 2 - REBAR CORROSION REPAIR

NTS

| ALLOWABLE BAR SIZE CHART | | |
|---|---|---|
| DESIGN BAR SIZE | | ALLOWABLE REBAR DIAMETER WITHOUT REPAIR |
| SIZE # | DIAMETER | |
| #3 | 3/8" ø | 5/16" ø |
| #4 | 1/2" ø | 7/16" ø |
| #5 | 5/8" ø | 9/16" ø |
| #6 | 3/4" ø | 5/8" ø |
| #7 | 7/8" ø | 3/4" ø |
| #9 | 1" ø | 7/8" ø |
| #10 | 1 1/8" ø | 1" ø |
| #11 | 1 1/4" ø | 1 1/8" ø |

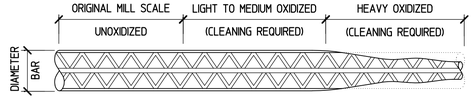


NOTES:

1. REMOVE ALL CORROSION AND SCALE BEFORE MEASURING EXISTING BAR DIAMETER
2. IF REINFORCING BAR DIAMETER, AFTER CLEANING, IS LESS THAN THE ALLOWABLE DIAMETER SHOWN IN BAR SIZE CHART, REPAIR PER 2/SR201

A / SR201 ALLOWABLE BAR DIAMETER WITHOUT REPAIR CHART

NTS

| REVISION NO. | DATE | REVISIONS | BY |
|---|---|---|---|
| | | | |

ARTHER R DAR
LICENSED PROFESSIONAL ENGINEER
No. 7808-S
HAWAII U.S.A.
Exp. Date: 4-30-20

THIS WORK WAS PREPARED BY ME OR UNDER MY SUPERVISION AND CONSTRUCTION OF THIS PROJECT WILL BE UNDER MY OBSERVATION

DEPARTMENT OF HAWAIIAN HOMELAND

NANAKULI FLOOD CONTROL CHANNEL IMPROVEMENTS NANAKULI VALLEY, OAHU HAWAII

SURFACE REPAIR NOTES & DETAILS

| | |
|---|---|
| DESIGNED BY: | TTP |
| DRAWN BY: | AK, AP, DL |
| CHECKED BY: | AD |
| SUPV: | |
| DATE: | 03/05/2019 |

HAWAII ENGINEERING GROUP, Inc.
Civil & Structural Engineers
1088 BISHOP STREET #2506
HONOLULU, HI 96813
Tel: 808-533-2092

JOB NO.

SHEET SR201
221 OF 225 SHTS

FILE ___ DRAWER ___ ___ FOLDER ___ ___

Plot date: 15-Apr-2020
Full Size Plot
J:/2017 Projects/17-140 DHHL Nanakuli & Wamanalo Flood Control Channel Improvements/Drawings/Structural/ME10/SR202

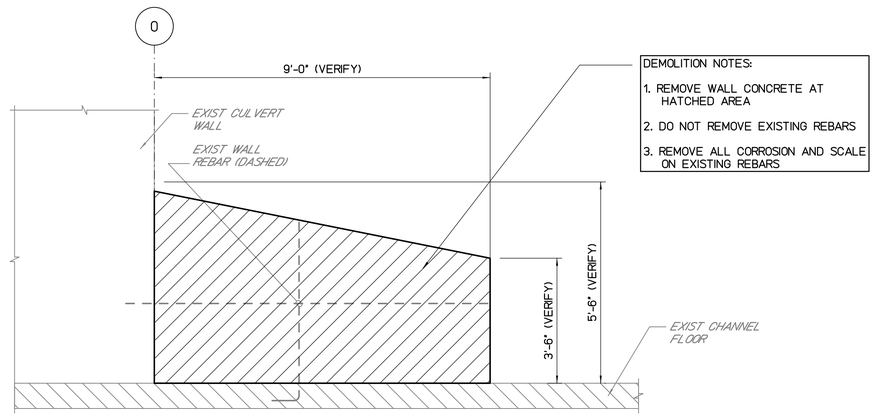


DEMOLITION NOTES:

1. REMOVE WALL CONCRETE AT HATCHED AREA
2. DO NOT REMOVE EXISTING REBARS
3. REMOVE ALL CORROSION AND SCALE ON EXISTING REBARS

DEMOLITION ELEVATION

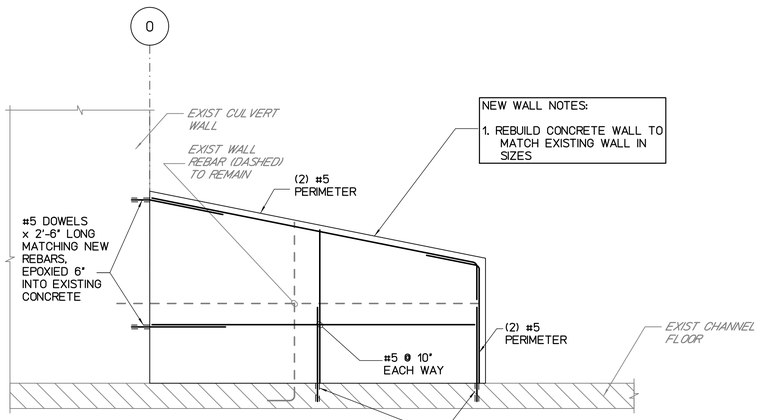


NEW WALL NOTES:

1. REBUILD CONCRETE WALL TO MATCH EXISTING WALL IN SIZES

REBUILT WALL ELEVATION

1 / SR202 REPAIR TYPE 4 - REMOVING & REBUILDING CONCRETE WALL

SCALE : 1/8" = 1'-0"

| REVISION NO. | DATE | REVISIONS | BY |
|---|---|---|---|
| | | | |

ATHER R. DAR
LICENSED PROFESSIONAL ENGINEER
No. 7808-S
HAWAII U.S.A.

Exp. Date: 4-30-20

THIS WORK WAS PREPARED BY ME OR UNDER MY SUPERVISION AND CONSTRUCTION OF THIS PROJECT WILL BE UNDER MY OBSERVATION

DEPARTMENT OF HAWAIIAN HOMELAND

NANAKULI FLOOD CONTROL CHANNEL IMPROVEMENTS
NANAKULI VALLEY, OAHU HAWAII

SURFACE REPAIR DETAILS

| | |
|---|---|
| DESIGNED BY: | TTP |
| DRAWN BY: | AK, AP, DL |
| CHECKED BY: | AD |
| SUPV: | |
| DATE: | 03/05/2019 |

HAWAII ENGINEERING GROUP, Inc.
Civil & Structural Engineers
1088 BISHOP STREET #2506
HONOLULU, HI 96813
Tel: 808-533-2092

JOB NO.

SHEET SR202
222 OF 225 SHTS

FILE ___ DRAWER ___ ___ FOLDER ___ ___

Plot date: 15-Apr-2020

Full Size Plot

CHAIN LINK - FENCE, WALK GATE & DOUBLE SWING GATE SPECIFICATIONS

1. FABRIC SHALL MEET THE GENERAL REQUIREMENTS FOR METALLIC-COATED STEEL CHAIN LINK FENCE FABRIC FOR INDUSTRIAL USAGE, AS COVERED BY ASTM A392. THE FABRIC SHALL BE OF A 2-INCH MESH WOVEN FROM A GOOD COMMERCIAL QUALITY STEEL WIRE OF NO. 9 GAUGE, 0.148 INCH NOMINAL DIAMETER BEFORE GALVANIZING. THE WIRE SHALL WITHSTAND A BREAKING LOAD OF 1,290 LBS. THE FABRIC SHALL BE HOT DIPPED GALVANIZED, NOT LESS THAN 1.2 OZ. OF ZINC PER SQUARE FOOT OF ACTUAL SURFACE COVERED, AFTER WEAVING AND FURNISHED WITH TOP AND BOTTOM SELVAGE TWISTED. THE FABRIC HEIGHT SHALL BE AS SHOWN ON THE PROJECT DRAWING.

2. POST SHALL BE HOT DIPPED GALVANIZED, INSIDE AND OUTSIDE, ROUND PIPE CONFORMING TO ASTM A120 STANDARD WEIGHT. ALL POSTS SHALL BE SET TRUE TO LINE AND GRADE AND EMBEDDED IN CONCRETE FOOTINGS. ORNAMENTAL TOPS SHALL BE PROVIDED WHEN NECESSARY.

   LINE POSTS SHALL BE 2-3/8 INCH O.D. PIPE, 3.65 LBS. PER LINEAL FOOT BEFORE GALVANIZING, SPACED NOT MORE THAN 10 FEET CENTER-TO-CENTER. FASTEN FABRIC TO LINE POSTS WITH GALVANIZED STEEL WIRE AT INTERVALS NOT EXCEEDING 15 INCHES. CORNER OR END POSTS SHALL BE 2-7/8 INCH O.D. PIPE 5.79 LBS. PER LINEAL FOOT BEFORE GALVANIZING.

   WALK GATE POSTS SHALL BE 2-7/8 INCH O.D. PIPE, 5.79 LBS. PER LINEAL FOOT BEFORE GALVANIZING, SPACED 4 FEET CENTER-TO-CENTER.

3. BRACING AND TOP RAIL SHALL BE HOT DIPPED GALVANIZED, INSIDE AND OUTSIDE, 1-5/8 INCH O.D. PIPE. 2.27 LBS. PER LINEAL FOOT. CONFORMING TO ASTM A120 STANDARD WEIGHT. INSTALL THE HORIZONTAL BRACE AT EACH CORNER, END, WALK GATE, AND DRIVE-GATE POSTS AT MID-HEIGHT OF THE FABRIC. EACH BRACE SHALL BE DIAGONALLY TRUSSED WITH A 3/8 INCH ROUND ROD, HOT DIPPED GALVANIZED, FROM THE LINE POST BACK TO THE CORNER, END, WALK GATE, OR DRIVE-GATE POST. EACH TRUSS ROD SHALL BE PROVIDED WITH A TURNBUCKLE, A HEAVY TRUSS TIGHTENER, AND BRACE END FITTINGS. FASTEN FABRIC TO BRACE RAIL WITH STEEL WIRE SPACED 24 INCHES O.C. ALL MATERIALS SHALL BE GALVANIZED.

4. GATES SHALL BE SWING TYPE, COMPLETE WITH LATCHES, STOPS, KEEPERS AND HINGES.

   GATE FRAMES SHALL BE CONSTRUCTED OF HOT DIPPED GALVANIZED, INSIDE AND OUTSIDE, 2 INCH O.D. PIPE, 2.72 LBS. PER LINEAL FOOT, CONFORMING TO ASTM A120 STANDARD WEIGHT. THE MEMBERS SHALL BE WELDED AT ALL CORNERS OR ASSEMBLED WITH FITTINGS AND RIGIDLY TRUSSED AND BRACED TO PREVENT SAG OR TWIST. WHERE WELDING IS DONE, CLEAN AND GRIND SMOOTH THE AREA BEFORE APPLYING AMERON "AMERCOAT 160" OR CARBOLINE "CARBOMASTIC 15" PER THE MANUFACTURE'S DIRECTION.

   GATE HINGES SHALL BE MALLEABLE INDUSTRIAL HINGES (90 DEGREES), GALVANIZED. THE HINGES SHALL BE OF ADEQUATE STRENGTH AND CAPABLE OF THE GATE BEING OPENED OR CLOSED EASILY BY ONE PERSON.

   GATE LATCHES, STOPS OR KEEPERS SHALL BE PROVIDED FOR ALL GATES. ALL DOUBLE SWING GATES SHALL HAVE A LATCH OF THE PLUNGER (DROP) ROD TYPE ARRANGED TO FULLY ENGAGE THE CENTER STOP. ALL SINGLE LEAF GATES SHALL BE EQUIPPED WITH A MALLEABLE FORK LATCH. ALL LATCHES SHALL BE ARRANGED FOR LOCKING (PAD LOCKS SHALL BE PROVIDED BY HAWAII ELECTRIC LIGHT COMPANY INC.). KEEPERS SHALL CONSIST OF A MECHANICAL DEVICE FOR SECURING THE FREE END OF THE GATE WHEN IN THE FULL OPEN POSITION. ALL MATERIALS SHALL BE GALVANIZED.

   GATE FABRIC SHALL BE THE SAME TYPE AS USED IN THE FENCE CONSTRUCTION. THE FABRIC SHALL BE ATTACHED SECURELY TO THE GATE FRAME AT INTERVALS NOT EXCEEDING 15 INCHES.

5. TENSION BARS AND BANDS SHALL BE PROVIDED AT ALL CORNER, END, AND GATE POSTS. TENSION BARS SHALL NOT BE LESS THAN 2 INCHES SHORTER THAN THE HEIGHT OF THE FABRIC WITH WHICH IT IS TO BE USED. TENSION BANDS SHALL BE OF ADEQUATE STRENGTH AND OF SUFFICIENT NUMBEST TO ADEQUATELY FASTEN THE FABRIC AND TENSION BAR TO THE CORNER, END, OR GATE POSTS AT INTERVALS NOT EXCEEDING 15 INCHES. ALL MATERIALS SHALL BE GALVANIZED.

6. TENSION WIRE SHALL BE MARCELLED NO. 7 GAUGE, 0.177 INCH NOMINAL DIAMETER, GALVANIZED WIRE. THE TENSION WIRE SHALL BE FASTENED TO THE FABRIC AT INTERVALS NOT EXCEEDING 24 INCHES.

7. INSTALLATION OF FENCING, INCLUDING GATES, SHALL MEET THE REQUIREMENTS OF ASTM F567.

8. GALVANIZING OF ALL STEEL PARTS FOR THE FENCING AND GATES ABOVE AND BELOW GROUND SHALL BE BY THE HOT DIPPED PROCESS IN ACCORDANCE WITH THE ASTM DESIGNATION FOR THE PARTICULAR PART.

9. FENCE GROUND WIRE SHALL BE IN ACCORDANCE WITH THE PROJECT GROUNDING PLAN AND SPECIFICATIONS.

10. FOOTINGS SHALL BE CONSTRUCTED WITH REGULAR WEIGHT CONCRETE. DESIGNED IN ACCORDANCE WITH ACI 211.1, OF 2,500 PSI MINIMUM COMPRESSIVE STRENGTH AT 28 DAYS. THE CONCRETE SHALL BE EITHER JOB MIXED (IF APPROVED BY THE ENGINEER), IN ACCORDANCE WITH ACI 304, OR PLANT MIXED, CONFORMING TO THE PROVISIONS OF ASTM C-94, IN AN APPROVED TYPE OF POWER OPERATED MIXER THAT WILL INSURE UNIFORMITY AND HOMOGENITY OF THE CONCRETE PRODUCED. HAND MIXING WILL NOT BE PERMITTED. CONCRETE THAT HAS STARTED TO HARDEN WILL NOT BE PERMITTED. ADDITION OF WATER IN ORDER TO MAINTAIN THE REQUIRED CONSISTANCY WILL NOT BE PERMITTED. THE TOP 6 INCHES OF ALL FOOTINGS SHALL BE FORMED. THE TOP OF ALL FOOTINGS SHALL BE TROWELLED SMOOTH AND CROWNED SLIGHTLY SO AS TO SHED WATER.

11. GENERAL ALL MATERIALS SHALL BE NEW AND MANUFACTURED IN THE UNITED STATES OF AMERICA. THERE SHALL BE NO SPLICING OF PIPES AND RODS ALLOWED.

12. FENCE POST FOOTING SHALL BE INSPECTED BEFORE FILLING WITH CONCRETE. FOOTING HOLE SHALL BE SQUARED (NOT ROUND) AT BOTTOM.

13. GATES SHALL BE PROVIDED WITH 1 INCH O.D. PIPE PLUNGER AS DROP ROD GUIDE AND LATCH ASSEMBLY. PROVIDE PER DETAILS. THIS SHEET. NO EXEPTIONS ALLOWED.

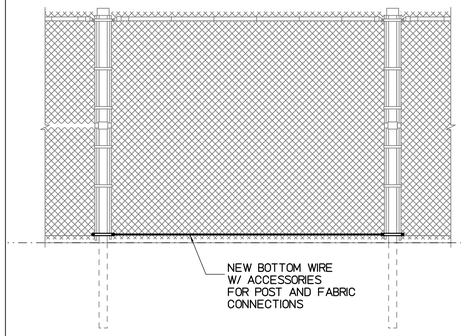


D SF201 REPAIR TYPE (D) - NEW BOTTOM WIRE
NOT TO SCALE

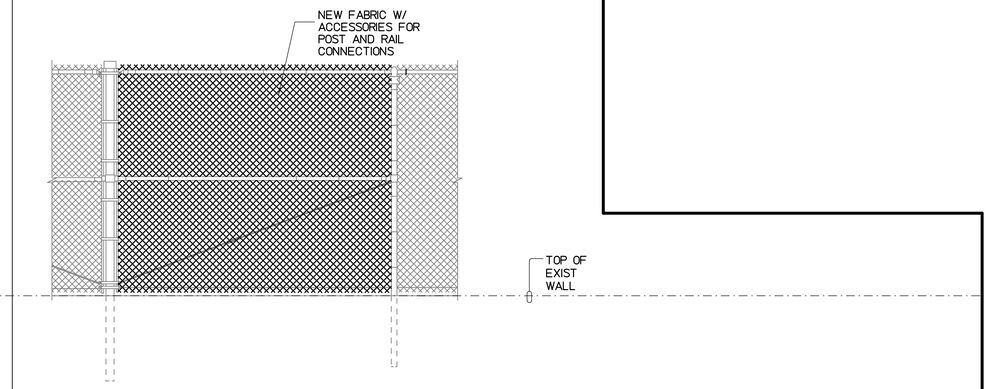


E SF201 REPAIR TYPE (E) - NEW FABRIC
NOT TO SCALE

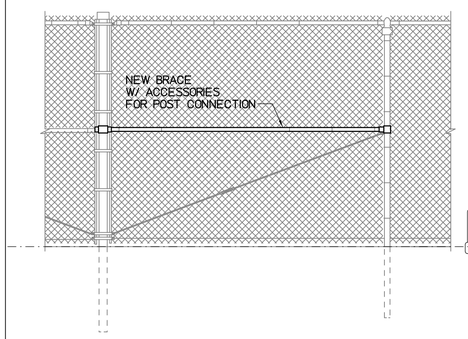


6' HIGH CHAINLINK FENCE

B SF201 REPAIR TYPE (B) - NEW BRACE
NOT TO SCALE

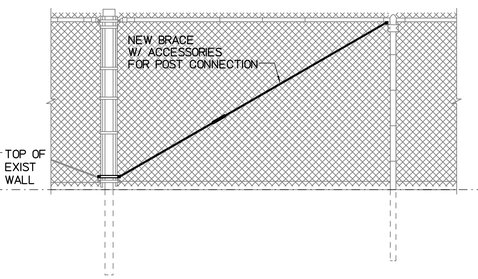


4' HIGH CHAINLINK FENCE

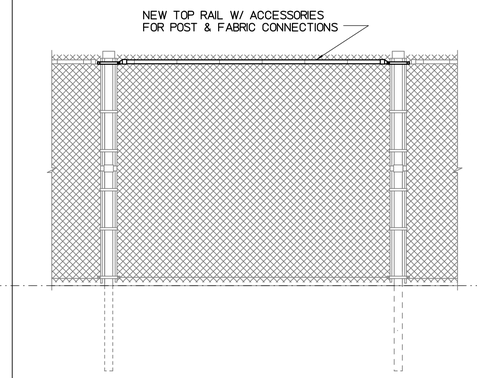


C SF201 REPAIR TYPE (C) - NEW TOP RAIL
NOT TO SCALE

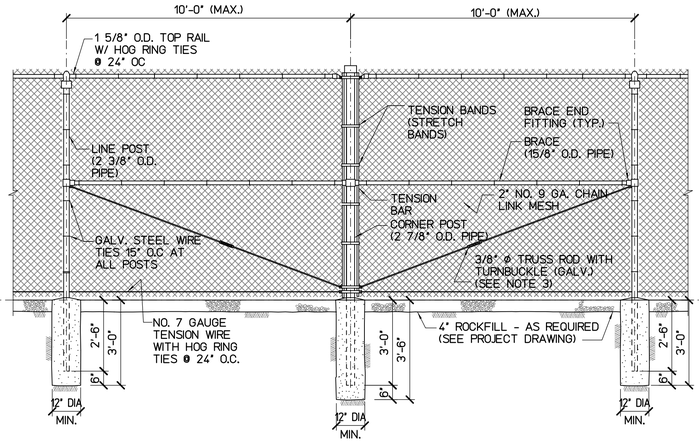


1 SF201 TYPICAL CHAIN LINK FENCE DETAILS
NOT TO SCALE

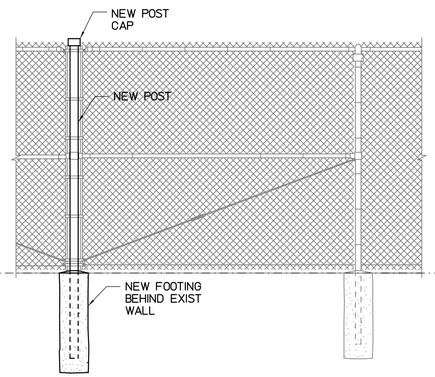


TYPICAL INSTALLATION BEHIND EXISTING WALL

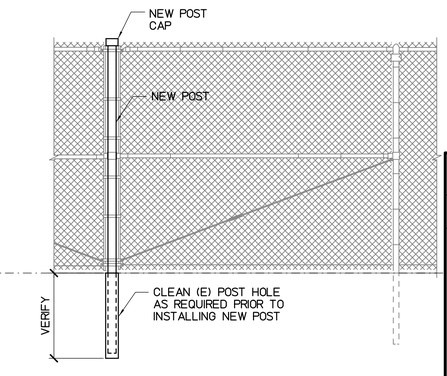


ALTERNATE INSTALLATION @ EXISTING WALL

A SF201 REPAIR TYPE (A) - NEW POST
NOT TO SCALE

| REVISION NO. | DATE | REVISIONS | BY |
|---|---|---|---|
| | | | |

ATHER R. DAR
LICENSED PROFESSIONAL ENGINEER
No. 7808-S
HAWAII U.S.A.
Exp. Date: 4-30-20

THIS WORK WAS PREPARED BY ME OR UNDER MY SUPERVISION AND CONSTRUCTION OF THIS PROJECT WILL BE UNDER MY OBSERVATION

DEPARTMENT OF HAWAIIAN HOMELAND

NANAKULI FLOOD CONTROL
CHANNEL IMPROVEMENTS
NANAKULI VALLEY, OAHU HAWAII

CHAINLINK FENCE REPAIR NOTES AND DETAILS

| | |
|---|---|
| DESIGNED BY: | TTP |
| DRAWN BY: | AK, AP, DL |
| CHECKED BY: | AD |
| SUPV: | |
| DATE: | 03/05/2019 |

HAWAII ENGINEERING GROUP, Inc.
Civil & Structural Engineers
1088 BISHOP STREET #2506
HONOLULU HI 96813
Tel: 808-533-2092

JOB NO.

SHEET
SF201
223 OF 225 SHTS

FILE ___ DRAWER ___ ___ FOLDER ___ ___

Plot date: 15-Apr-2020

Full Size Plot

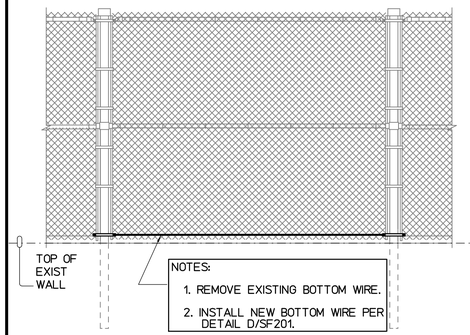


I SF202 REPAIR TYPE (I) - REPLACE BOTTOM WIRE

NOT TO SCALE

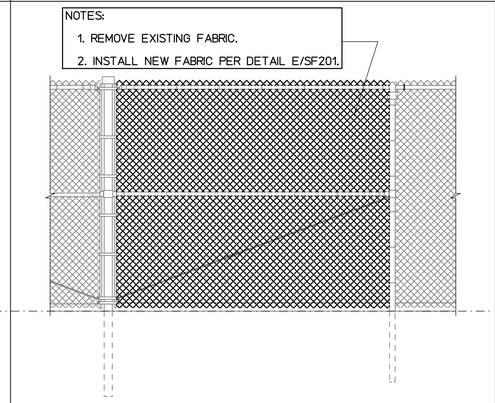


J SF202 REPAIR TYPE (J) - REPLACE FABRIC

NOT TO SCALE

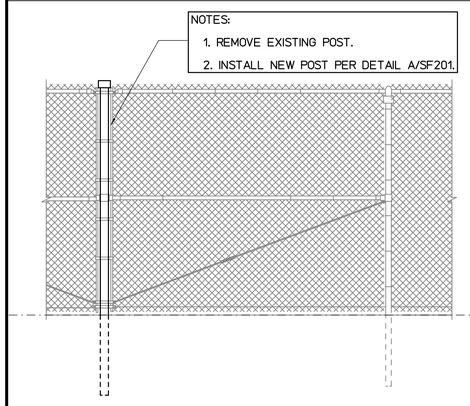


F SF202 REPAIR TYPE (F) - REPLACE POST

NOT TO SCALE

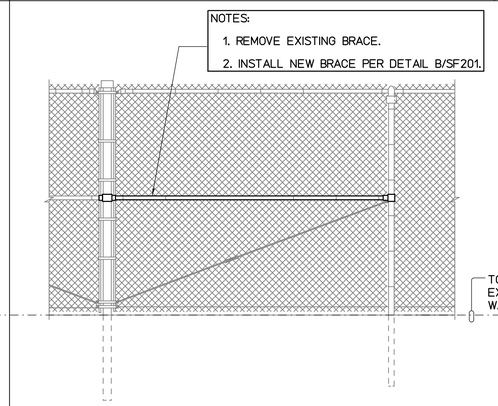


6' HIGH CHAINLINK FENCE

G SF202 REPAIR TYPE (G) - REPLACE BRACE

NOT TO SCALE

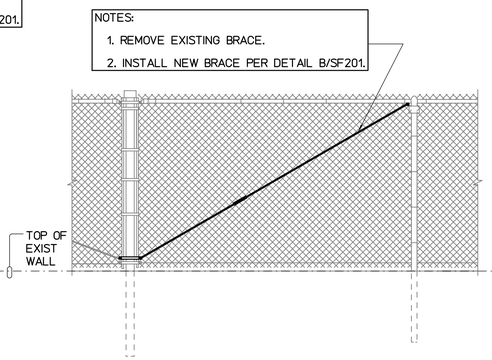


4' HIGH CHAINLINK FENCE

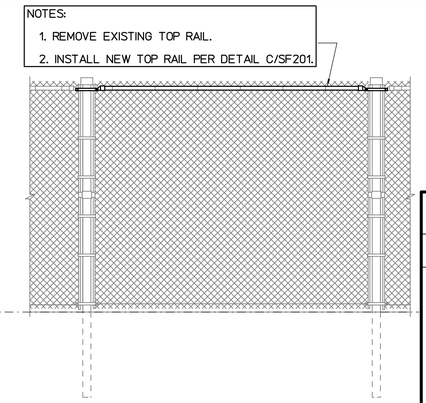


H SF202 REPAIR TYPE (H) - REPLACE TOP RAIL

NOT TO SCALE

| REVISION NO. | DATE | REVISIONS | BY |
|---|---|---|---|
| | | | |

ATHER R. DAR
LICENSED PROFESSIONAL ENGINEER
No. 7808-S
HAWAII U.S.A.

Exp. Date: 4-30-20

THIS WORK WAS PREPARED BY ME OR UNDER MY SUPERVISION AND CONSTRUCTION OF THIS PROJECT WILL BE UNDER MY OBSERVATION

DEPARTMENT OF HAWAIIAN HOMELAND

NANAKULI FLOOD CONTROL
CHANNEL IMPROVEMENTS
NANAKULI VALLEY, OAHU HAWAII

CHAINLINK FENCE REPAIR DETAILS

| | |
|---|---|
| DESIGNED BY: | TTP |
| DRAWN BY: | AK, AP, DL |
| CHECKED BY: | AD |
| SUPV: | |
| DATE: | 03/05/2019 |

HAWAII ENGINEERING GROUP, Inc.
Civil & Structural Engineers
1088 BISHOP STREET #2506
HONOLULU, HI 96813
Tel: 808-533-2092

JOB NO.

SHEET
SF202
224 OF 225 SHTS

FILE ___ DRAWER ___ FOLDER ___ ___

Plot date: 15-Apr-2020
Full Size Plot

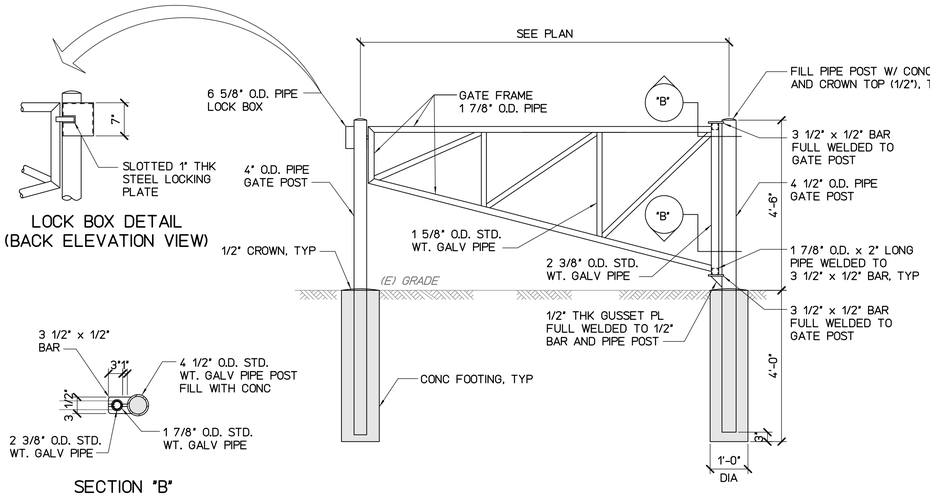


LOCK BOX DETAIL
(BACK ELEVATION VIEW)

SECTION "B"

ELEVATION VIEW

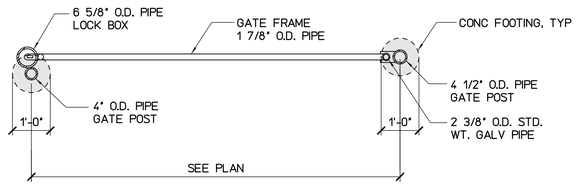


PLAN VIEW

NOTES:

1. ALL PIPES SHALL BE GALVANIZED STEEL.
2. WRAP REFLECTIVE TAPE AROUND ENTIRE PIPE GATE FRAMES AND POSTS. ALTERNATE 12" BANDS OF RED AND SILVER.
3. ADJUST CLEAR DIMENSION TO MAKE BOTH FRAMES LEVEL EACH OTHER AND TO ALLOW CLEARANCES FOR GATE SWING.
4. ALL CONCRETE FOOTINGS SHALL BE CLASS "B" CONCRETE.

A / SF203 TYPICAL GATE POST AND FRAME DETAILS

NOT TO SCALE

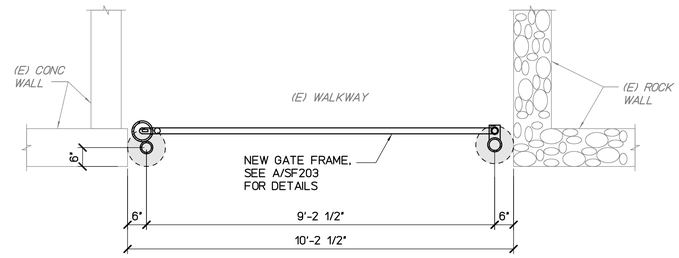


GATE PLAN AT GRID (150)

SCALE: 1/2" = 1'-0"

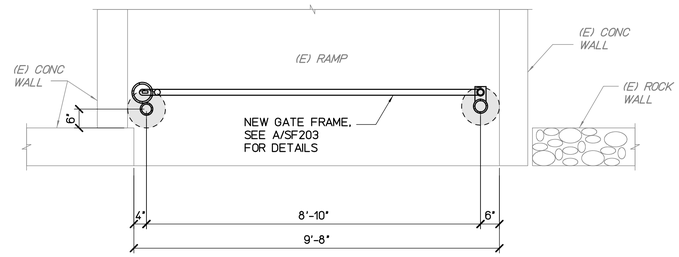


GATE PLAN AT GRID (149)

SCALE: 1/2" = 1'-0"

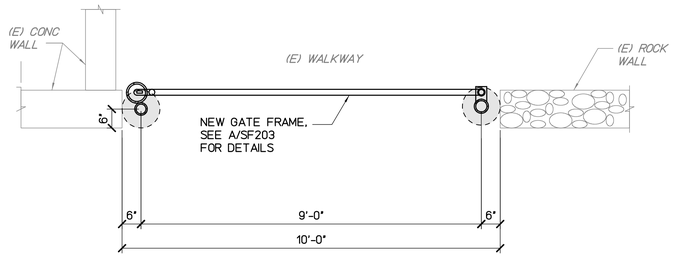


GATE PLAN AT GRID (173)

SCALE: 1/2" = 1'-0"

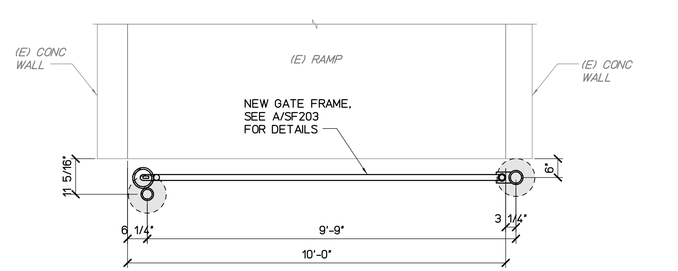


GATE PLAN AT GRID (87)

SCALE: 1/2" = 1'-0"

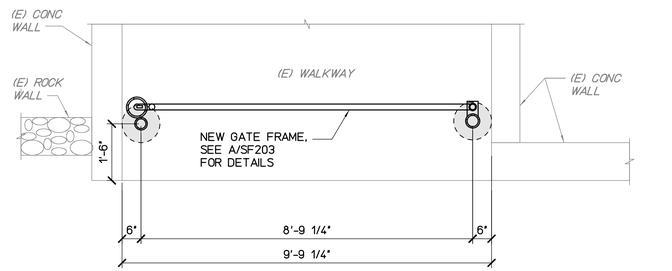


GATE PLAN AT GRID (171)

SCALE: 1/2" = 1'-0"

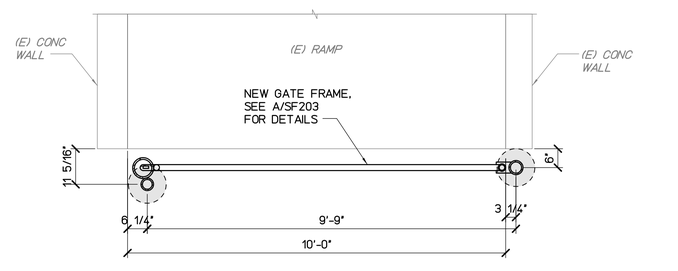


GATE PLAN AT GRID (63)

SCALE: 1/2" = 1'-0"

NOTE:
ALL DIMENSIONS WILL BE VERIFIED BY THE CONTRACTOR.

| REVISION NO. | DATE | REVISIONS | BY |
|---|---|---|---|

ATHER R DAR
LICENSED PROFESSIONAL ENGINEER
No. 7808-S
HAWAII U.S.A.
Exp. Date: 4-30-20

THIS WORK WAS PREPARED BY ME OR UNDER MY SUPERVISION AND CONSTRUCTION OF THIS PROJECT WILL BE UNDER MY OBSERVATION

DEPARTMENT OF HAWAIIAN HOMELAND

NANAKULI FLOOD CONTROL CHANNEL IMPROVEMENTS
NANAKULI VALLEY, OAHU HAWAII

GATE AND DETAILS

| | |
|---|---|
| DESIGNED BY: | TTP |
| DRAWN BY: | AK, AP, DL |
| CHECKED BY: | AD |
| SUPV: | |
| DATE: | 03/05/2019 |

HAWAII ENGINEERING GROUP, Inc.
Civil & Structural Engineers
1088 BISHOP STREET #2506
HONOLULU, HI 96813
Tel: 808-535-2092

JOB NO.

SHEET SF203
225 OF 225 SHTS

FILE ___ DRAWER ___ ___ FOLDER ___ ___